Beneficial Use of Industrial Materials and Recycling in Indiana DOT Projects

Date Submitted to EPA Region 5: 2006

CASE STUDY #7: Use of Fly Ash in Embankments by InDOT

1. Contact Person (phone and email) for More Information

InDOT: *Athar Khan (atkhan@indot.state.in.us) and Nayyar Siddiki (nsiddiki@indot.state.in.us)*
IDEM: *Tracy Barnes (tbarnes@idem.IN.gov, 317/308-3110)*
Generator: *Nipsco*
Consultant: *GAI*

InDOT Special Provision "Embankments Construction Using High Volume Fly Ash (HVFA)"

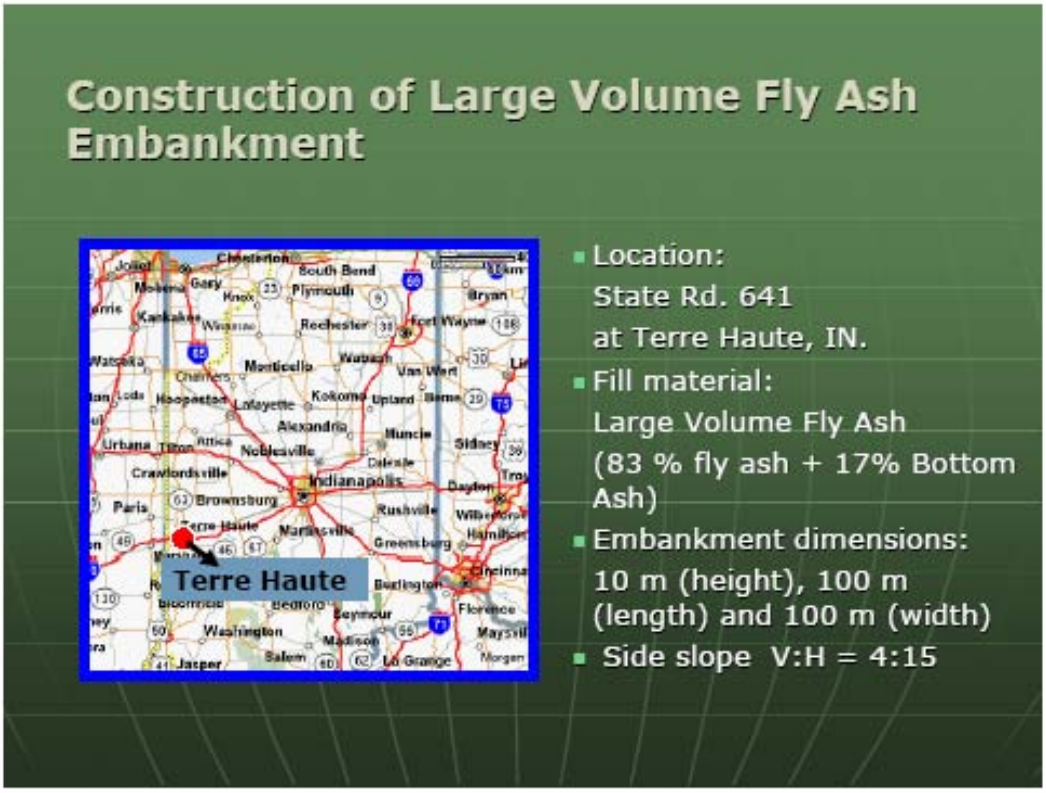

Schematic Diagram of Embankment

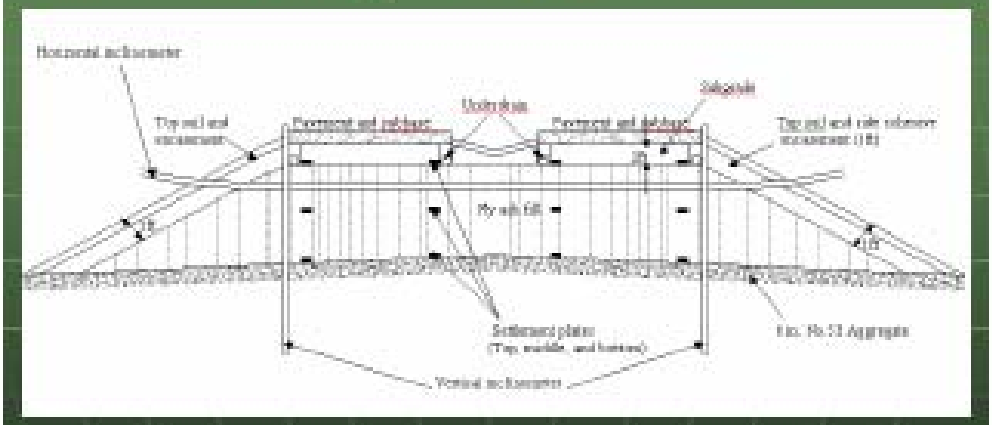

- Monitoring Wells (1 up-gradient, 2 down-gradient) are installed within 20ft from the toe of embankment

Fill Material (Ponded Fly and Bottom Ash)

- Disposal Pond (Wabash River Power Plant, IN.)

Compaction Quality Control

Dry Density	14.7 kN/m^3 (93.9 pcf)
Moisture Content	± 2% of OMC (18 %)
Nuclear Gauge and Microwave Oven Test	4 locations per lift
DCPT	6 > BC for 6 in penetration, every 15m interval

Settlement at station 6+250

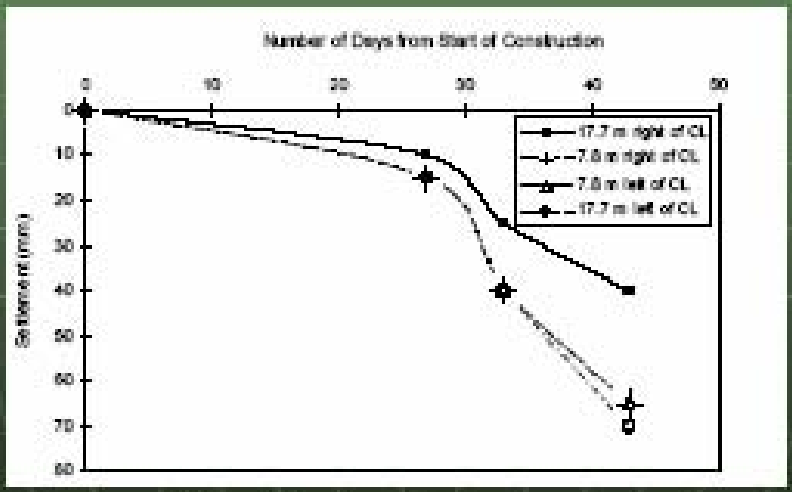

Predicted final settlement: 146 mm

Fly Ash Dumped in Place

Spreading of Fly Ash in Lifts

Compaction of Fly Ash Using Vibratory Rollers

Microwave Oven Method

Dynamic Cone Penetration Test (DCPT)

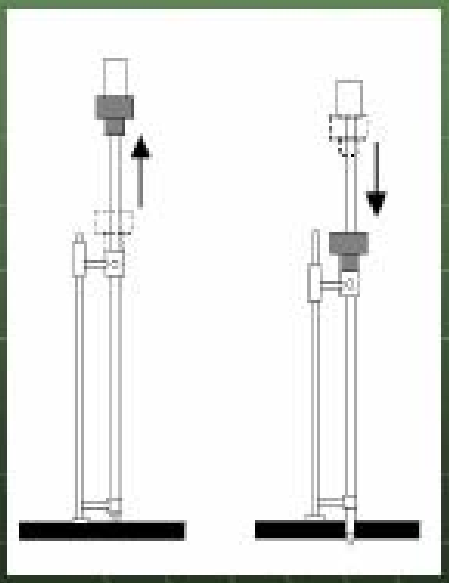

- Weight of hammer: 17.6 lbs. (8 kg)
- Drop height: 26 inch (60cm)
- Cone tip: 60 °

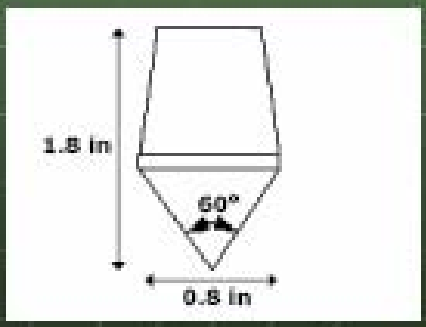

Compaction Quality Control

Dry Density	14.7 kN/m^3 (93.9 pcf)
Moisture Content	± 2% of OMC (18 %)
Nuclear Gauge and Microwave Oven Test	4 locations per lift
DCPT	6 > BC for 6 in penetration, every 15m interval