Received
3/8/01
Revisions Inserted
= FINAL FOD

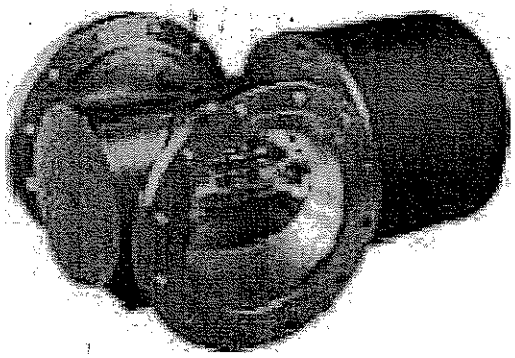

Field Operations Document
for the

EPA / NSF Environmental Technology Verification (ETV) Program

Trojan UVSwift Ultraviolet System

March 2001

MONTGOMERY WATSON

TABLE OF CONTENTS

Page

EXECUTIVE SUMMARY

GENERAL DESCRIPTION OF EQUIPMENT ES-1
STATEMENT OF PERFORMANCE CAPABILITIES TO BE VERIFIED ES-1
TESTING LOCATION ES-2
Feedwater Quality: ES-2
Test Site: ES-2
TESTING SCHEDULE ES-3
LIST OF PARTICIPANTS ES-3

SECTION 1- ENVIRONMENTAL TECHNOLOGY VERIFICATION RESPONSIBILITIES

1.1 PROJECT ORGANIZATION, INCLUDING OPERATIONAL AND ANALYTICAL SUPPORT 1-1
1.2 PROJECT PARTICIPANTS 1-1
1.3 DEFINITION OF ROLES AND RESPONSIBILITIES OF PROJECT PARTICIPANTS 1-4
1.3.1 Field Testing Organization Responsibilities 1-4
1.3.2 Manufacturer Responsibilities 1-4
1.3.3 Operator and Test Site Staff Responsibilities 1-5
1.3.4 Water Quality Analyst Responsibilities 1-5
1.4 SITE NAME AND LOCATION 1-5
1.4.1 Site Background Information 1-5
1.4.2 Source/Feed Water Quality 1-6
1.4.3 Test Site Description 1-9
1.4.4 Site Summary 1-10

SECTION 2- EQUIPMENT CAPABILITIES AND DESCRIPTION

2.1 DESCRIPTION OF EQUIPMENT 2-1
2.2 ENGINEERING AND SCIENTIFIC CONCEPTS ON WHICH THE EQUIPMENT IS BASED 2-4
2.3 DESCRIPTION OF THE TREATMENT TRAIN AND UNIT PROCESSES 2-4
2.4. DESCRIPTION OF PHYSICAL CONSTRUCTION/COMPONENTS OF THE EQUIPMENT 2-5
2.5 RATES OF CHEMICAL CONSUMPTION, NATURE AND PRODUCTION RATES OF WASTE MATERIAL 2-6
2.5.1 Chemical Consumption 2-6
2.5.2 Waste Production and Physical and Chemical Nature of Wastes 2-6
2.6 LICENSING REQUIREMENTS 2-7
2.7 STATEMENT OF PERFORMANCE CAPABILITIES 2-7
2.8 LIMITATIONS OF EQUIPMENT 2-7
2.9 CHLORINATION VERSUS UV INACTIVATION 2-8

SECTION 3- EXPERIMENTAL DESIGN

3.1 QUANTITATIVE AND QUALITATIVE EVALUATION CRITERIA 3-1
3.2 WATER TREATMENT PROBLEMS ULTRAVIOLET INACTIVATION IS DESIGNED TO ADDRESS 3-2
3.2.1 Inactivation of Microbial Contaminant 3-2
3.2.2 How UV light Inactivates Microbial Contaminants 3-2
3.2.3 Potential Users of UV Equipment 3-3
3.3 KEY TREATED WATER QUALITY PARAMETERS 3-3
3.3.1 Range of Key Water Quality Parameters the Equipment is Designed To Address 3-3
3.3.2 Key Treated Water Quality Parameters for Evaluation of Equipment Performance 3-4
3.4 CALCULATION OF STATISTICAL UNCERTAINTY AND OPERATING PARAMETERS 3-5
3.4.1 Calculation of Statistical Uncertainty 3-5
3.4.2 Definition and Calculation of Operational Parameters 3-5
3.5 TESTING SCHEDULE 3-6
3.6 OPERATIONS AND MAINTENANCE 3-7

SECTION 4- FIELD OPERATIONS PROCEDURES

4.1 INITIAL OPERATIONS 4-1
4.2 ENVIRONMENTAL TECHNOLOGY VERIFICATION TESTING PLAN 4-1
4.2.1 Task 1: Verification Testing Runs and Routine Equipment Operation 4-2
4.2.2 Task 2: Feed Water and Finished Water Quality 4-2
4.2.3 Task 3: Documentation of Operating Conditions and Treatment Equipment Performance 4-2
4.2.4 Task 4: Microbial Inactivation 4-2
4.2.5 Task 5: Data Management 4-2
4.2.6 Task 6: Quality Assurance/Quality Control 4-2
4.3 TASK A: CHARACTERIZATION OF FEED WATER 4-2
4.4 TASK B: INITIAL OPERATIONS 4-3
4.4.1 Introduction 4-3
4.4.2 Objectives 4-3
4.4.3 Work Plan 4-3
4.4.4 Analytical Schedule 4-3
4.4.5 Evaluation Criteria 4-4
4.5 TASK 1: VERIFICATION TESTING RUNS AND ROUTINE EQUIPMENT OPERATION 4-4
4.5.1 Introduction 4-4
4.5.2 Experimental Objectives 4-4
4.5.3 Work Plan 4-4
4.5.4 Schedule 4-5
4.5.5 Evaluation Criteria 4-5
4.6 TASK 2: TEST RUNS FOR FEED WATER AND FINISHED WATER QUALITY 4-5
4.6.1 Introduction 4-5
4.6.2 Experimental Objectives 4-6

4.6.3 Work Plan 4-6
4.6.4 Water Quality Sample Collection 4-7
4.6.5 Analytical Schedule 4-8
4.6.6 Evaluation Criteria and Minimum Reporting Requirements 4-8
4.7 TASK 3: DOCUMENTATION OF OPERATING CONDITIONS AND TREATMENT EQUIPMENT PERFORMANCE 4-9
4.7.1 Introduction 4-9
4.7.2 Objectives 4-9
4.7.3 Work Plan 4-10
4.7.4 Schedule 4-10
4.7.5 Evaluation Criteria 4-11
4.8 TASK 4: DOCUMENTATION OF EQUIPMENT PERFORMANCE 4-11
INACTIVATION OF MICROORGANISMS 4-11
4.8.1 Introduction 4-11
4.8.2 Experimental Objectives 4-12
4.8.3 Work Plan 4-12
4.8.4 Microbiological Viability Analysis 4-16
4.8.5 Analytical Schedule 4-16
4.8.6 Evaluation Criteria and Minimum Reporting Requirements 4-17
4.9 TASK 5: DATA MANAGEMENT 4-17
4.9.1 Introduction 4-17
4.9.2 Experimental Objectives 4-17
4.9.3 Work Plan 4-17
4.9.4 Statistical Analysis 4-18
4.10 TASK 6: QUALITY ASSURANCE/QUALITY CONTROL 4-18
4.10.1 Introduction 4-18
4.10.2 Experimental Objectives 4-19
4.10.3 Work Plan 4-19
4.10.4 On-Site Analytical Methods 4-19
4.10.5 Chemical and Biological Samples Shipped off-Site for Analysis 4-21
4.11 OPERATION AND MAINTENANCE 4-21
4.11.1 Maintenance 4-22
4.11.2 Operation 4-22

SECTION 5- QUALITY ASSURANCE PLAN

5.1 METHODOLOGY FOR MEASUREMENT OF PRECISION AND ACCURACY 5-1
5.1.1 Precision and Accuracy for Water Quality Parameters 5-1
5.1.2 Precision and Accuracy for Operational Parameters 5-2
5.2 METHODOLOGY FOR USE OF BLANKS 5-3
5.2.1 Method Blanks 5-3
5.2.2 Spiked Samples 5-4
5.2.3 Microbiological Travel Samples 5-4
5.2.4 MS-2 Control Samples 5-4
5.3 PERFORMANCE EVALUATION SAMPLES 5-4
5.4 SAMPLES TO BE ANALYZED IN DUPLICATE 5-4

5.5 DATA CORRECTNESS 5-5
5.5.1 Representativeness 5-5
5.5.2 Statistical Uncertainty 5-7
5.5.3 Accuracy 5-8
5.5.4 Precision 5-8
5.6 CALCULATION OF DATA QUALITY INDICATORS 5-8
5.6.1 Precision 5-8
5.6.2 Relative Percent Deviation 5-8
5.6.3 Accuracy 5-8
5.6.4 Statistical Uncertainty 5-9
5.7 DATA REPORTING 5-9
5.7.1 Monthly Status Reports 5-9
5.7.2 Audit Reports 5-10
5.7.3 Draft and Final ETV Reports 5-10
5.8 CORRECTIVE ACTION PLAN 5-10
5.8.1 Corrective Action Plan for Water Quality Parameters 5-10

SECTION 6- DATA MANAGEMENT, ANALYSIS AND REPORTING

6.1 DATA MANAGEMENT PLAN 6-1
6.1.1 Data Recording 6-1
6.1.2 Data Reduction and Entry 6-1
6.1.3 Data Validation 6-1
6.1.4 Quality Assurance 6-2
6.1.5 Types of Data and Information 6-2
6.2 DATA REPORTING 6-3

SECTION 7- SAFETY CONSIDERATIONS

APPENDIX A – LABORATORY ACCREDITATION

APPENDIX B – TROJAN FLOWRATE-UVT-LOG INACTIVATION DATA

LIST OF FIGURES

Figure Number	Description	Page
ES-1	UV Verification Testing Schedule	ES-3
1-1	Organizational Chart Showing Lines of Communication	1-2
1-2	OWTP Effluent Water Quality	1-8
1-3	Schematic of Testing Area	1-9
2-1	Photograph of UVSwift System	2-1
2-2	Schematic Diagram of Trojan UVSwift System	2-3
2-3	Schematic Diagram of the Baffle 4L 12 Swift	2-3
2-4	Schematic of the Treatment Process	2-5
3-1	UV Verification Testing Schedule	3-7

LIST OF TABLES

Table Number	Description	Page
1-1	Verification Testing Organization and Participants	1-3
2-1	Advantages and disadvantages of UV compared to chlorination	2-9
3-1	Evaluation Criteria for UV ETV Testing	3-1
3-2	Operating Range of Manufacturer's Ultraviolet System	3-4
3-3	Key Treated Water Quality Parameters for UV Evaluation	3-4
4-1	Water Quality and Measurement Schedule	4-6
4-2	Water Quality Analytical Methods	4-7
4-3	UV Disinfection System Operating Data	4-11
4-4	Seeding Challenge Details	4-15
5-1	Methodology for Measurement of Precision and Accuracy	5-1
5-2	Methodology for Use of Method Blanks	5-3
5-3	Corrective Action Plan	5-11
6-1	Data and Information to be Included in the Project Database and Final ETV Report	6-3

ABBREVIATIONS AND ACRONYMS

°C	Celsius degrees
CDHS	California Department of Health Services
CFD	Computational Fluid Dynamics
cfu	Colony forming unit(s)
cm	centimeter
cm^2	square-centimeter
d	Day(s)
DOC	Dissolved organic carbon
DBP(s)	Disinfection byproduct(s)
EPA	Environmental Protection Agency
ESWTR	Enhanced Surface Water Treatment Rule
ETV	Environmental Technology Verification
FOD	Field Operations Document
ft^2	Square foot (feet)
FTO	Field Testing Organization
gpm	Gallon(s) per minute
Hp	Horsepower
HPC	Heterotrophic Plate Count
hr	Hour(s)
HRT	Hydraulic Retention Time
Hz	Hertz
ICR	Information Collection Rule
IL	Intensity light
In	inches
in Hg	Inch(es) of Mercury
kg	Kilogram(s)
kW	Kilowatts
L	Liter(s)
lb	pounds
m^2	Square meter(s)
m^3/d	Cubic meter(s) per day
mgd	Million gallons per day
mg/L	Milligram(s) per liter
min	Minute(s)
mJ	MilliJoules
mL	Milliliter(s)
Mn	Manganese
MPN	Most probable number
NO_3	Nitrate
Nm	nanometer
NSF	NSF International (formerly known as the National Sanitation Foundation)
NTU	Nephelometric turbidity unit(s)
OWTP	Otay water treatment plant
PCo. CU	Platinum Cobalt Color Units
PE	Performance evaluation
PLC	Programmable logic controller
psi	Pound(s) per square inch
QA	Quality assurance
QC	Quality control
sec	Second(s)
SWTR	Surface Water Treatment Rule
T	Temperature
TC	Total coliform bacteria
TDS	Total dissolved solids
TOC	Total organic carbon
TSS	Total suspended solids
UV-254	Ultraviolet light absorbance at 254 nanometers
UV	Ultraviolet
V	Volt

EXECUTIVE SUMMARY

This document is a Field Operations Document for NSF International (NSF), formerly known as the National Sanitation Foundation, for the small systems EPA/NSF Environmental Technology Verification (ETV) Program. In the proposed ETV Program, a proprietary ultraviolet light (UV) technology will be evaluated for the inactivation of microbial contaminants.

GENERAL DESCRIPTION OF EQUIPMENT

The equipment to be tested in the ETV is the Trojan UVSwift System. The system consists of a flow-through reactor designed from Computational Fluid Dynamics (CFD) modeling, computer simulation, and bioassay testing to minimize short-circuiting and increase UV energy efficiency. The Trojan UVSwift reactor has an axial inlet and outlet and incorporates either two (2) or four (4) medium-pressure lamps arranged in cross-flow. The UVSwift Model 4L12 used in this study contains four lamps. The UVSwift reactor is 12-in in diameter and 21-in in length. The medium pressure lamps operate at higher intensity than conventional low-pressure lamps, resulting in the requirement of fewer lamps to achieve an inactivation target dose and a smaller reactor footprint. The system is designed to deliver a fairly constant irradiance output from the high-intensity lamps which must be corrected for the effects of lamp aging. The effective UV dose (the product of irradiance and contact time) delivered by the reactor will vary with changes in the influent water quality, the flowrate through the reactor, and the effectiveness of the automated cleaning system used to control fouling of the lamp quartz sleeves. The Trojan UVSwift System provides automatic cleaning of the UV lamp sleeves, as well as a flexible design for system upgrades.

The Trojan UVSwift System is designed to operate within a flow range of 200 gpm to 3.6 mgd, and the delivered UV dose at a particular flow rate is controlled by the number of lamps and the lamp output/setting that are operational within the reactor. System stability is monitored from lamp output data and advanced sensor technology components strategically positioned within the reactor to measure changes in UV irradiance. The system is typically validated to accommodate the worst case anticipated water quality conditions (lowest UV percent transmittance value) and then optimized during the design phase for site specific water quality conditions.

STATEMENT OF PERFORMANCE CAPABILITIES TO BE VERIFIED

The Trojan UVSwift unit Model 4L12 is capable of producing 2-log inactivation of MS2 bacteriophage in a filtered water with a transmittance of 85 ± 3% and a turbidity less than 5 NTU when operated at approximately 695 gpm (1 mgd) and at 80% of lamp power).

TESTING LOCATION

The test site is the City of San Diego's Aqua 2000 Research Center located at the Otay Water Treatment Plant (OWTP) at 1500 Wueste Road in Chula Vista, California. The feed water will consist of treated Otay Lake water. Treatment consists of conventional pre-oxidation, coagulation, flocculation, sedimentation, granular media filtration, chloramination, and corrosion control. Chlorine residual will be quenched with a solution of sodium bisulfite prior to start of MS2 seedings. This site offers a number of significant advantages for conducting the ETV.

The feedwater to the system will consist of plant filtered, before addition of chloramines and corrosion control chemicals. If unchloraminated filtered water cannot be made available due to site-restriction issues, chloraminated filtered water (plant effluent) will be used. In this later case, chloramines will be quenched before any MS-2 seeding.

Feedwater Quality:

- High hardness and pH can contribute to fouling/scaling of the lamp quartz sleeves and provide an opportunity to test the efficiency of the lamp sleeve cleaning mechanism
- Elevated levels of organic material typically result in water with a low UV transmittance level which will challenge the efficiency of the UV irradiance produced by the reactor

Test Site:

- Research facility dedicated to research projects since 1995
- Access to Otay WTP plant effluent with typical UV transmittance level of 85 percent
- Fully-equipped on-site water quality laboratory
- On-site operations trailer with office, conference and computer facilities
- All utilities, including power, lighting and hot water, in addition to potable water and wastewater
- Complete safety facilities, including chemical containment, shower and eyewash

TESTING SCHEDULE

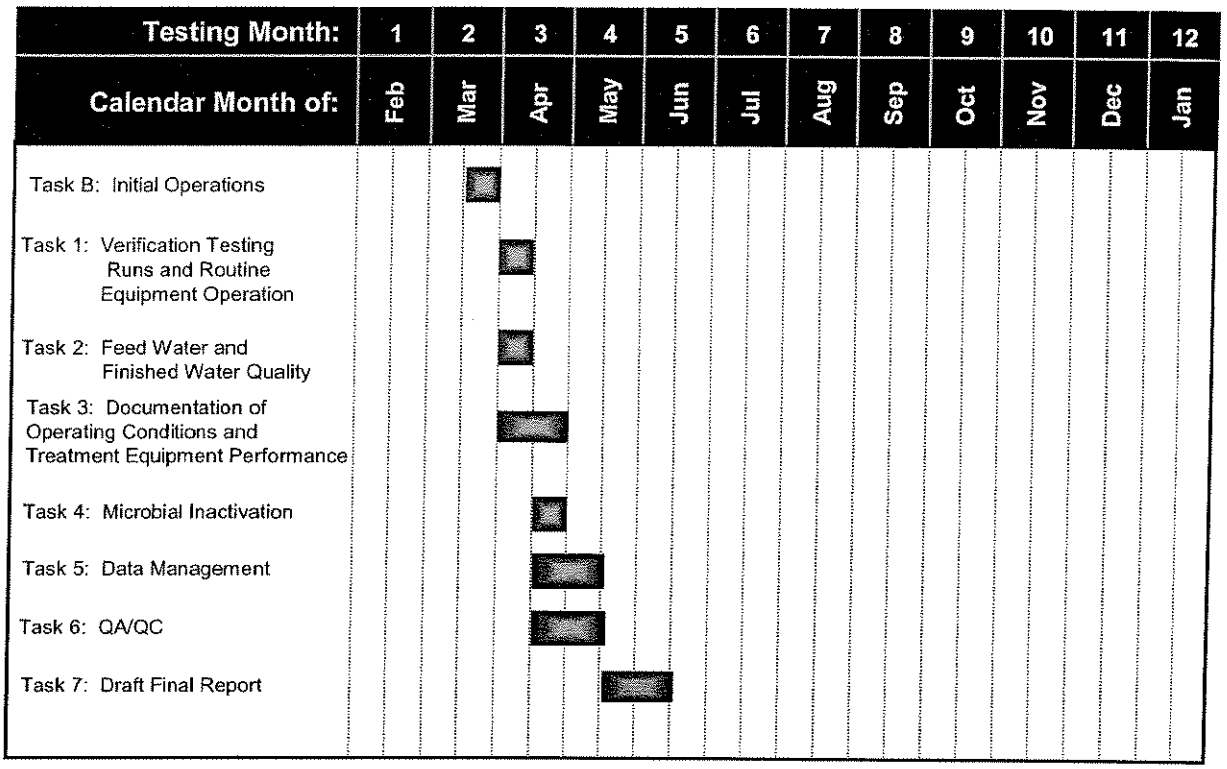

Figure ES-1
UV Verification Testing Schedule

LIST OF PARTICIPANTS

The participants in the ETV are:

Montgomery Watson:	Field Testing Organization
Trojan Technologies Inc.:	Manufacturer
City of San Diego:	Pilot Plant Operations and Water Quality Analysis

SECTION 1
ENVIRONMENTAL TECHNOLOGY VERIFICATION TESTING RESPONSIBILITIES

This document is a Field Operations Document (FOD) for the EPA/NSF Environmental Technology Verification (ETV) Program. The ETV will evaluate the Trojan UVSwift System Ultraviolet light (UV) System for the inactivation of microbial contaminants. This FOD was developed in accordance with the *EPA/NSF Protocol for Equipment Verification Testing for Inactivation of Microbiological Contaminants - Final Protocol – August 9, 1999* ("NSF Protocol").

This section defines the ETV participants and their roles and responsibilities. The key participants in the ETV include the Field Testing Organization (FTO), the UV manufacturer, the testing site owner, the operations staff, the analytical staff and the data management staff. This section also includes information on the testing site.

1.1 PROJECT ORGANIZATION, INCLUDING OPERATIONAL AND ANALYTICAL SUPPORT

Figure 1-1 is an organization chart showing the project participants and the lines of communication established for the ETV. The FTO, Montgomery Watson, provides overall management of the ETV through the project manager and project engineers. The responsibilities of the FTO are detailed below. The UV manufacturer for the ETV is Trojan Technologies Inc. The manufacturer's representative will ensure that all responsibilities of the manufacturer (also described in detail below) are met in a timely and complete manner. The operations management and staff are from the test site at the City of San Diego Otay Water Treatment Plant, Aqua 2000 Research Center in San Diego, California. Water quality analyses will be provided by the City of San Diego laboratory, which is a state-certified, third-party accredited and EPA-accredited laboratory. A copy of the laboratory accreditation is provided in Appendix A. Data management will be performed by the FTO, Montgomery Watson.

1.2 PROJECT PARTICIPANTS

A list of each project participant and relevant information, including name, affiliation, mailing address, contact person, role, telephone and fax numbers and e-mail address is included in Table 1-1.

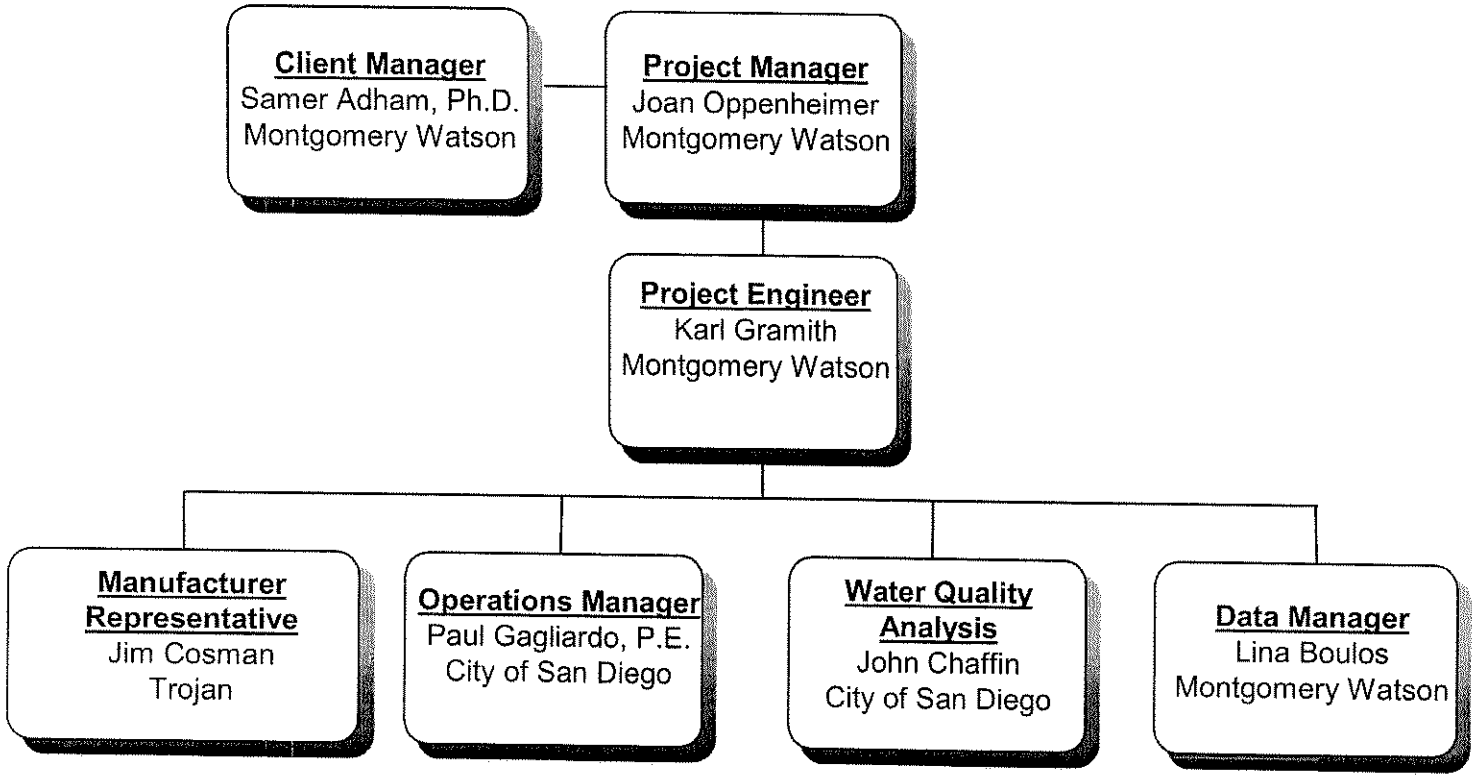

Figure 1-1
Organizational Chart Showing Lines of Communication

TABLE 1-1
VERIFICATION TESTING ORGANIZATION AND PARTICIPANTS

Participant/ Contact Person	Affiliation	Address	Role	Phone/Fax/E-mail
Samer Adham	Montgomery Watson	555 East Walnut St. Pasadena, CA 91109	Client Manager	Phone: 626-568-6751 Fax: 626-568-6323 E-mail: samer.adham@mw.com
Joan Oppenheimer	Montgomery Watson	555 East Walnut St. Pasadena, CA 91109	Project Manager	Phone: 626-568-6752 Fax: 626-568-6323 E-mail: joan.oppenheimer@mw.com
Paul Gagliardo	City of San Diego Metropolitan Wastewater Department	600 "B" Street Suite 600 San Diego, CA 92101-4587	Operations Manager	Phone: 619-533-4222 Fax: 619-533-4267 E-mail: pzg@mwadmin.sannet.gov
Karl Gramith	Montgomery Watson	Aqua 2000 Research Center 1500 Wueste Road, Chula Vista 91915	Project Engineer	Phone: 858-538-8194 Fax: 858-538-8199 E-mail: karl.gramith@mw.com
Mike Kedzior	City of San Diego Otay Filtration Plant • Water Department	Aqua 2000 1500 Wueste Road, Chula Vista California 91915	Senior Operations Supervisor	Phone: 619-424-0452 Fax: 619-424-0454 E-mail: mzk@sdcity.sannet.gov
John Chaffin	City of San Diego Water Utilities Department Water Production Division Engineering Section	5540 Kiowa Drive La Mesa, CA 91942	Laboratory Manager	Phone: 619-668-3233 Fax: 619-668-3250
Jim Cosman	Trojan Technologies Inc. Product Manager	3020 Gore Road London, Ontario, Canada N5V 4T7	Manufacturer's Product Manager	Phone: 519-457-3400 x2515 Fax: 519-457-3030 E-mail:JCOSMAN@TROJANUV.COM
Lina Boulos	Montgomery Watson	555 East Walnut St. Pasadena, CA 91109	Data Manager	Phone: 626-568-6745 Fax: 626-568-6323 E-mail: lina.boulos@mw.com

1.3 DEFINITION OF ROLES AND RESPONSIBILITIES OF PROJECT PARTICIPANTS

1.3.1 Field Testing Organization Responsibilities

The specific responsibilities of the FTO, Montgomery Watson, are to:

- Provide the overall management of the ETV through the project manager and the project engineers.
- Provide all needed logistical support, the project communication network, and all scheduling and coordination of the activities of all participants.
- Manage, evaluate, interpret and report on data generated in the ETV.
- Evaluate the performance of the UV technology according to the FOD and the testing, operations, quality assurance/quality control (QA/QC), data management and safety protocols contained therein.
- Report on the performance of UV technology.
- Provide all quality control (QC) information such as calibrations, blanks and reference samples in an appendix to the final ETV report; report all raw analytical data in an appendix to the ETV report.
- Provide all data generated during the ETV in hard copy and electronic form in a common spreadsheet or database format.

- Montgomery Watson's Applied Research Laboratory will be providing the stock culture of the coliphage.

1.3.2 Manufacturer Responsibilities

The specific responsibilities of the UV manufacturer, Trojan Technologies Inc., are to:

- Provide complete, field-ready equipment for the ETV at the testing site in Chula Vista, California. This includes the UV reactor, the collimated beam apparatus, and the reference sensor.
- Provide logistical and technical support as required throughout the ETV.
- Provide technical assistance to the FTO during the initial 2-week testing and provide guidance during operation and monitoring of the UV equipment being tested.
- Provide partial funding for the project.
- Attend project meetings as necessary.

1.3.3 Operator and Test Site Staff Responsibilities

The specific responsibilities of the operations and test site staff from the City of San Diego Water Department are to:

- Provide set-up, shake-down, operations, maintenance and on-site analytical services according to the FOD and the testing, operations, QA/QC, data management and safety protocols contained therein.
- Provide the necessary and appropriate space for the equipment to be tested in the ETV.
- Provide all necessary electrical power, feedwater and other utilities as required for the ETV.
- Ensure that the test site has feedwater quality consistent with the objectives of verification testing.
- Provide all necessary drains to the pilot test.

1.3.4 Water Quality Analyst Responsibilities

The specific responsibilities of the water quality analytical staff from the City of San Diego Laboratory are to:

- Provide all off-site water quality analyses prescribed in the FOD according to the QA/QC protocols contained therein.
- Provide reports with the analytical results to the data manager.
- Provide detailed information on the analytical procedures implemented.

The specific responsibilities of the microbiology staff from the City of San Diego Marine Microbiology Laboratory are to:

- Conduct all MS-2 coliphage assays as prescribed in the FOD according to the QA/QC protocols contained therein.

1.4 SITE NAME AND LOCATION

The test site is the City of San Diego's Aqua 2000 Research Center at 1500 Wueste Road in Chula Vista, California.

1.4.1 Site Background Information

The Aqua 2000 Research Center was established in 1995 to conduct most of the research work related to the water repurification project of the City of San Diego. The Center has dedicated two full time operators and one supervisor with substantial experience in evaluating emerging water treatment systems. Sufficient influent water supply, electrical power, pipelines and proper drainage lines will be provided to the treatment train. Easy access to each process component in the treatment train will be

provided for efficient operation. The UV manufacturer will provide the UV equipment required for the proposed field testing.

1.4.2 Source/Feed Water Quality

Particles and dissolved contaminants can interfere with UV light transmission and reduce inactivation efficiency. The NSF protocol is therefore applicable to the use of UV technology for treating high quality water (<5 NTU turbidity and >80% transmittance at 1 cm) sources including treated surface water supplies of consistent high quality. The feedwater for the UV testing is full-scale plant effluent water from the OWTP. OWTP is a conventional water treatment plant with a design capacity of 40 MGD. The plant operates at an average flow rate of 30 MGD. The plant draws water from Otay Lake, and potassium permanganate is added as a pre-oxidant when necessary for taste and odor control. The water is then dosed with ferric chloride and cationic polymer at the rapid mix, and passed through flocculation basins to a sedimentation basin. The sedimentation basin effluent is dosed again with cationic polymer to act as a filter aid, and chlorinated. The water is then filtered through sand and anthracite filter beds, and then ammonium hydroxide and chlorine are added for chloramine formation, and the pH is adjusted to 8 with caustic for corrosion control. Feed water for the UVSwift System will be obtained directly after the filters, prior to the addition of ammonium hydroxide and chlorine. If residual chlorine is still present in the filtered effluent, it may be necessary to add a dechlorinating agent such as sodium thiosulfate upstream of the UV reactor. In the event that filtered cannot be made available due to site restrictions, plant effluent will be used as feedwater to the UV system. Sodium bisulfite will be added ahead of the UV system to quench residual combined chlorine.

Figure 1-2 illustrates OWTP effluent water quality for the period of January 2000 through December 2000, for alkalinity, hardness, calcium, magnesium, total chlorine and TOC, and for the period of January 1996 through December 1996 for the UV-254 absorbance and % UV transmittance.

The plant effluent water quality in terms of key parameters is illustrated in Figure 1-2. Total hardness ranged from 138 to 173 mg/L as $CaCO_3$, alkalinity ranged from 161 to 172 mg/L as $CaCO_3$, calcium ranged from 38 to 41 mg/L, and magnesium ranged from 11 to 19 mg/L. Turbidity was consistently less than 0.2, typical of filtered waters, and ranged from 0.10 to 0.15 NTU. The levels of organic material, as quantified by total organic carbon (TOC), were moderate to high in the plant effluent. The TOC range was 4.4 to 6.6 mg/L and total chlorine concentration was consistent at approximately 2.5 mg/L.

The NSF Protocol lists the following critical feedwater quality factors that can influence UV system performance:

- High turbidity, often occurring during spring run-off. Particulate load may absorb or interfere with UV radiation.
- Seasonal algal blooms. Algae absorb and interfere with UV radiation.
- Natural organic matter, which can be higher in some waters during the autumn. Organic matter may absorb UV radiation, and may contribute to fouling of the lamp surfaces.
- Iron, nitrate, pH, alkalinity and hardness, which may vary seasonally for some waters, can contribute to fouling of the lamp surfaces, scaling of the quartz sleeves, or may absorb UV radiation.
- Low transmittance at 1 cm would also impact the efficiency of UV radiation.

Effluent from the OWTP exhibits most of the key water quality conditions cited above as potentially impacting UV performance. These include high hardness and pH (138-173 mg/L as $CaCO_3$ for hardness and 7.7-8.4 for pH), moderately high natural organic matter (as quantified by TOC), which fluctuates substantially throughout the year (4.4-6.6 mg/L) and low transmittance at 1 cm (83-87%). These water quality parameters represent critical conditions for UV scaling and absorption of UV radiation and a good opportunity to evaluate the restoration of UV irradiance following cleaning of the lamps.

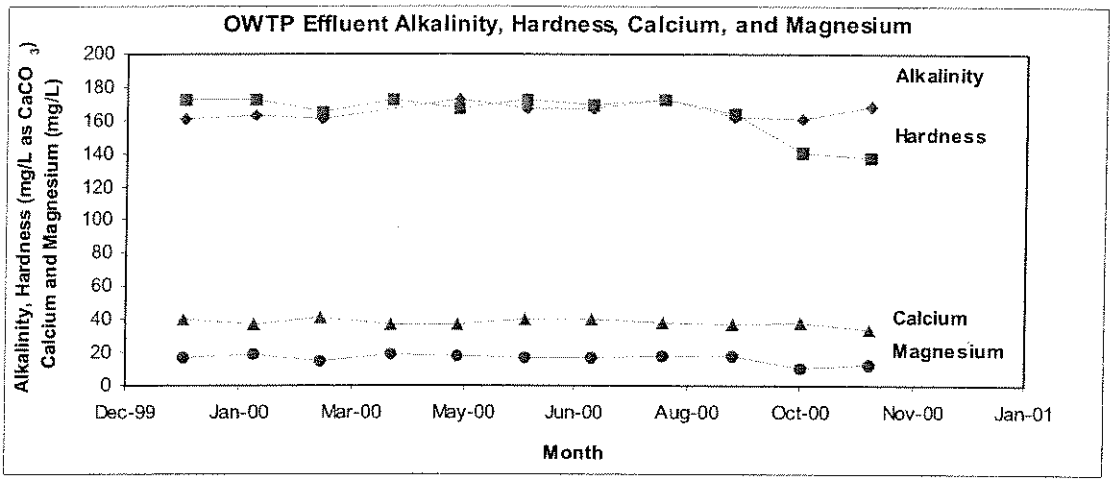

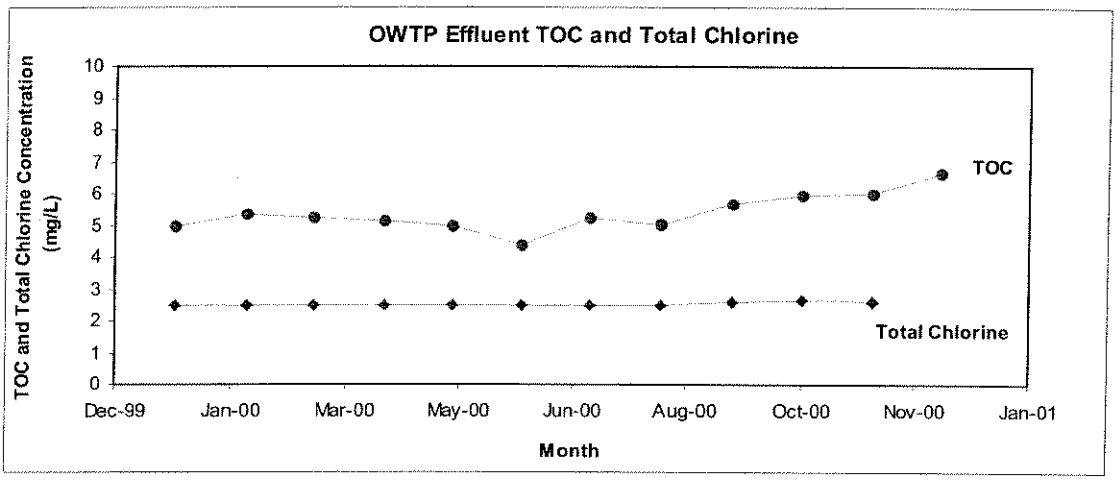

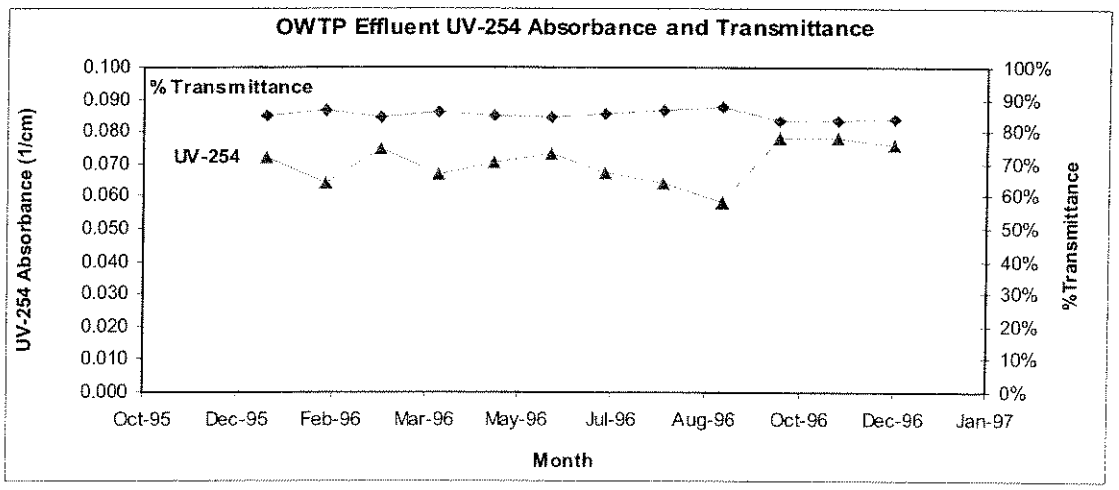

Figure 1-2
OWTP Effluent Water Quality

1.4.3 Test Site Description

Figure 1-3 is a schematic diagram of the proposed testing site and the location of the UV system. Below is a list of the facilities and equipment that are currently available at the proposed pilot site.

Structural

- Enclosures appropriate to the NEMA rating of the unit
- Potable water connections.
- No drainage system connected to a wastewater plant. Effluent will be collected, chlorinated and de-chlorinated in batch mode and returned to Otay Lake.
- Chemical containment area (chlorine).
- Sufficient lighting for 24-hour operation.
- Full electrical supply.
- Chemical safety shower and eyewash.
- An operations trailer with conference room, offices, and computers.
- A laboratory trailer for on-site water quality analyses.

Onsite Analytical Equipment

- Hach Pocket Colorimeter for chlorine analysis
- Hach ratio/non-ratio 2100N Turbidimeter
- Hach EC30 pH meter
- IL radiometer (1L1770/SED 240) or reference sensor to be supplied by manufacturer.

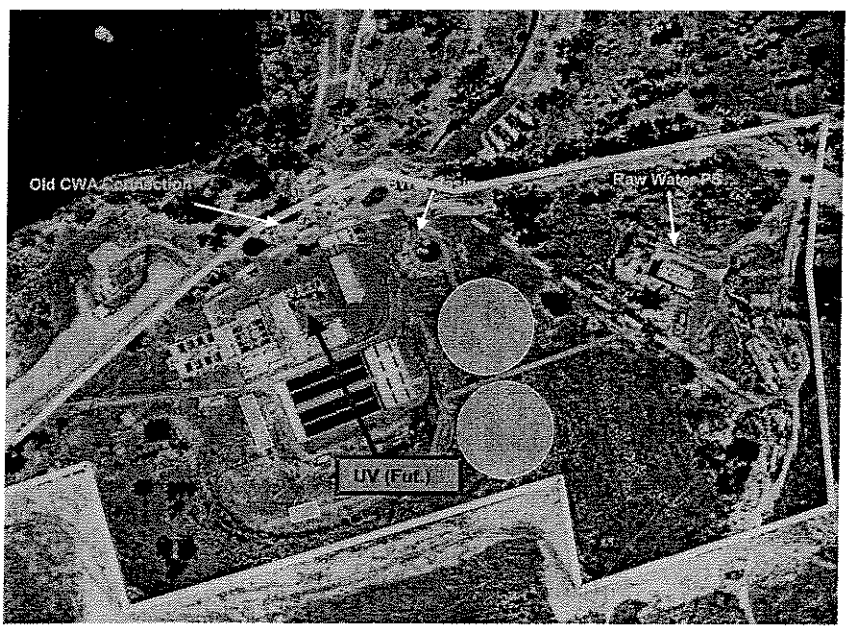

Figure 1-3
Map of Testing Area

Transmission of Feed Water
A booster pump will be used to boost the water flow and pressure from the filtered water line (or plant effluent line) to the UV system.

Handling of Treated Water and Residuals
All of the treated water will be directed to Otay Lake. Seeding water will be chlorinated and dechlorinated before discharge into Otay Lake.

Discharge Permits.
No discharge permits are necessary for this pilot study.

1.4.4 Site Summary

In summary, the Aqua 2000 site offers a number of significant advantages for conducting the UV ETV:

Feedwater Quality:
- High hardness and pH, as well as elevated and fluctuating levels of organic material can contribute to fouling of the lamp surfaces, scaling of the quartz sleeves, or may absorb UV radiation and provide an excellent test of cleaning efficiency for the lamps
- Low turbidity, typical of treated water applications for which UV technology is applicable
- Low transmittance measurements will challenge the efficiency of UV radiation

Test Site:
- Research facility dedicated to research projects since 1995
- Fully-equipped on-site water quality laboratory
- On-site operations trailer with office, conference and computer facilities
- All utilities, including electrical power, lighting and hot water, in addition to potable water and wastewater
- Complete safety facilities, including chemical containment, shower and eyewash

SECTION 2
EQUIPMENT CAPABILITIES AND DESCRIPTION

2.1 DESCRIPTION OF EQUIPMENT

The Trojan UVSWIFT family of inactivation systems are cross-flow reactors, with medium pressure UV lamps housed in a 1.5" diameter quartz sleeves and situated perpendicular to the flow of the water. The UVSwift Model 2L12 has a 12" chamber diameter and two lamps spaced 8" apart on the central plane of the reactor. The UVSwift Model 4L12 is also a 12" reactor, but has four lamps spaced equally on an 8" circle. In these 12" diameter reactors, the lamps are 2.8 kW medium pressure lamps with 25 cm arc lengths, and both contain a flow-modifying device of proprietary design situated at the inlet of the reactor chamber. Each lamp has sixteen settings, ranging from 30% to 100% lamp output.

The equipment to be tested in the ETV is a Trojan UVSwift Model 4L12, depicted in Figure 2-1. Utilizing medium pressure lamps that produce a spectrum of ultraviolet and visible light, the Trojan UVSwift System is capable of disinfecting waterborne microorganisms including viruses, bacteria, and protozoa. Resistant waterborne pathogens such as rotovirus undergo extensive inactivation at doses of 40 mJ/cm^2, the current dose cited for use of UV in municipal water applications.

Trojan UVSwift System is capable of treating flow rates from 200 gpm to 3.6 MGD. The reactor contains four medium pressure UV lamps with total lamp power of 11.2 kW. The maximum system pressure is 150 psi (10 bar).

The Trojan UVSwift flow-through reactor provides reactor hydraulics that reduce the potential for short-circuiting. The intent of this feature is to deliver the UV dose efficiently and reliably. The system's UV energy efficiency would translate into numerous advantages: fewer lamps to achieve inactivation targets, a compact footprint, reduced capital expenses for new facilities, and simple retrofits into restrictive pipe galleries.

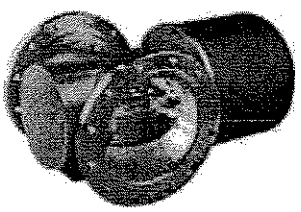

Figure 2-1
Photograph of UVSwift system

A schematic diagram of the UVSwift system process is shown in Figure 2-2. The UVSwift reactor is 12-in in diameter and 21-in in length and has axial inlet/outlet. The approximate dimensions of the reactor are: A =25 in; B = 33 in; C = 19 in; D = 15 in, and E = 21 in. The system employs four medium pressure lamps with cross-flow arrangement and with an output that can be varied with flow requirements and water quality changes. An adjusting valve located on the influent line controls the flowrate through the UV reactor. In addition, The UV reactor incorporates two UV sensors which are used to measure the UV irrandiance and the water's UV transmittance. Each UV sensor is housed within a

protective quartz sleeve in the UV reactor. The UV sensors are factory-calibrated against a traceable reference standard polychromatic source. An additional sensor is provided as a reference to verify performance of the installed sensors and use as a cross-check for the vendor-calibrated sensors. A baffle is employed to produce uniform flow pattern. A schematic of the baffle is illustrated in Figure 2-3.

The UVSwift System employs an automatic cleaning mechanism for each lamp in the reactor. The UVSwift system is provided with an automatic physical/chemical cleaning system. This cleaning system operates on-line while the UV reactor is in operation (providing inactivation). This cleaning system consists of an internal stainless steel screw with an externally mounted electric motor as the direct drive (1/8 HP or 90 W motor power). A stainless steel wiper collar is fitted around each quartz sleeve. All collars are mounted on a common yoke and driven along the length of the sleeve by the same drive. The wiper collars contain a food-grade cleaning agent between two food-grade seals (63 mL cleaning agent housed within each of the four collars, for a total of 252 mL per reactor). The cleaning agent aids in the cleaning process by dissolving and loosening the foulant while the seals wipe the surface clean. This food-grade cleaning agent is a proprietary chemical developed by Trojan Technologies Inc. Trojan Technologies Inc. is currently seeking NSF-60 certification for this agent. The only remaining portion of the certification process is an audit to Trojan's facility. The chemical cleaning aid is changed out every 6 months. No change is anticipated during the testing period. The cleaning system may be operated manually via the operator interface on the control panel, or may be set to operate at a fixed time interval. This interval is field adjustable. A wiper collar is also provided for the UV Intensity sensor sleeve. This wiper collar uses a food-grade rubber wiper. This wiper collar is mounted on the same yoke, and driven by the same drive as the lamp sleeve collars. This automatic self-cleaning process enables the lamps in the UV system to operate for extended periods without manual mechanical or chemical cleaning. The cleaning system will reduce fouling of the lamp surfaces and scaling of the quartz sleeves caused by particulate load and natural organic matter from runoff periods, algae blooms, hardness, iron and nitrate.

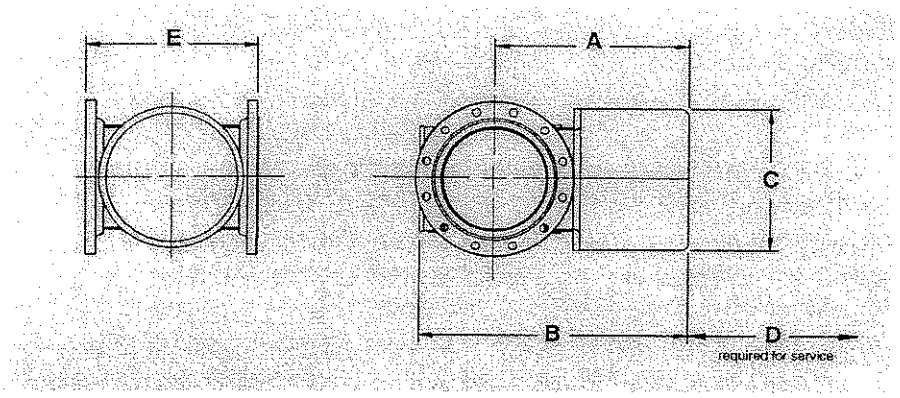

Figure 2-2
Schematic Diagram of the Trojan UVSwift™ system

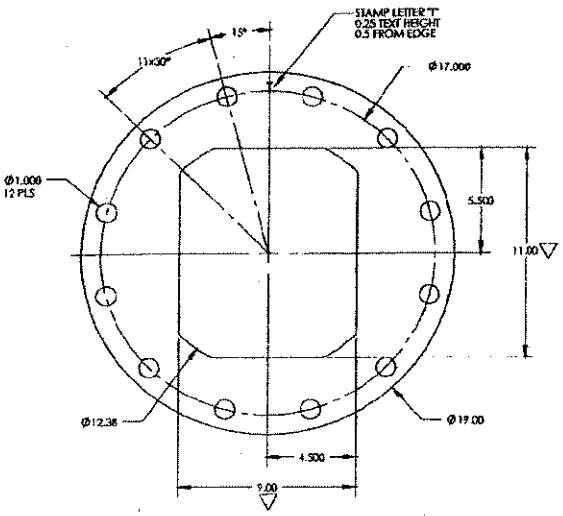

Figure 2-3
Schematic Diagram of the Baffle 4L12 Swift

2.2 ENGINEERING AND SCIENTIFIC CONCEPTS ON WHICH THE EQUIPMENT IS BASED

UV inactivation is an increasingly popular alternative to chemicals for the inactivation of drinking water, wastewater, and industrial waters. Over 2,000 groundwater and surface drinking water installations in Europe and 1,000 groundwater installations in the United States rely on UV inactivation.

Ultraviolet light, at germicidal wavelengths, disinfects water by altering the genetic material (nucleic acids, e.g. DNA) in microorganisms. The effect of UV on nucleic acids prevents the organism from reproducing and eliminates its ability to cause infection. In ultraviolet inactivation systems, medium or low-pressure lamps emit germicidal UV light and as water flows past the lamps, microorganisms are exposed to a dose of UV energy sufficient to prevent the organisms from replicating. UV dose (mWs/cm^2 or mJ/cm^2) is measured as a product of UV light intensity in milliwatts per square centimeter (mW/cm^2) multiplied by the exposure time in seconds within the reactor.

Microorganisms typically found in water systems vary in their sensitivity to UV energy however, inactivation doses for these microorganisms are well known and documented. Resistant waterborne pathogens such as rotovirus undergo extensive inactivation at doses of 40 mJ/cm^2, the current dose cited for use of UV in municipal water applications. The Trojan UVSwift System is capable of disinfecting waterborne microorganisms including viruses, bacteria, and protozoa at a reactor dose capable of achieving 2-log inactivation of MS2 bacteriophage. This is generally ascribed to be an average reactor dose of 40 mJ/cm^2 (based on a bioassay dose of MS2 bacteriophage).

2.3 DESCRIPTION OF THE TREATMENT TRAIN AND UNIT PROCESSES

The UVSwift System to be tested will include:

- Need for dechlorination of the filtered plant effluent or plant effluent ahead of the UV reactor
- A sufficient run of straight pipe (five times the UV reactor length of straight pipe upstream and three reactor lengths downstream). However, the reactor can be fitted with elbows with turning vanes specified by the manufacturer just before and after the reactor or with a static mixer.
- Feed pump
- UV reactor

The UVSwift reactor is 12-in in diameter and 21-in in length and has axial inlet/outlet. It contains four medium-pressure lamps arranged cross-flow. Feed water is pumped and flows through the UV reactor. Irradiated water is collected in the effluent storage tank.

The UVSwift System employs an automatic cleaning mechanism for each lamp in the reactor. This automatic self-cleaning process enables the lamps in the UV system to operate for extended periods without manual mechanical or chemical cleaning.

The UV system provided by Trojan Technologies Inc. includes the reactor, a touch screen operator interface providing all relevant parameters, two sensors, and an automatic cleaning mechanism. Valves and flowmeters for monitoring and control of the system will be added to the system by Montgomery Watson, as well as a computer data logger. Figure 2-4 illustrates the schematic of the treatment process. The reactor is supplied by the manufacturer. Other components are supplied by MW/San Diego. Feed and effluent storage tanks for MS2 Phage seedings will also be provided by MW/San Diego.

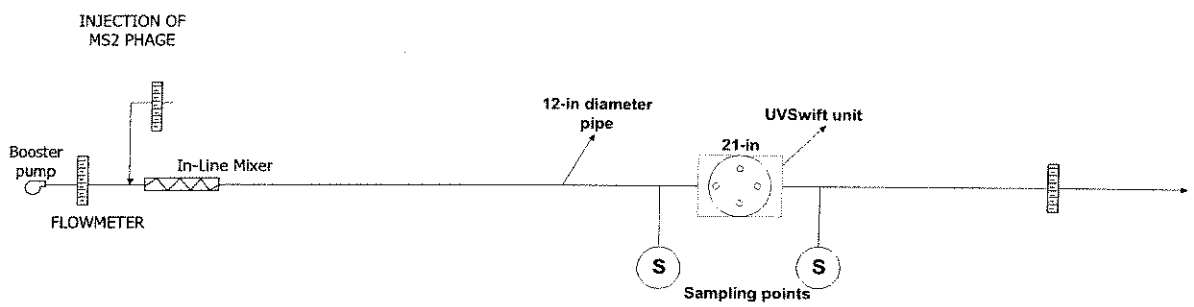

Figure 2-4
Schematic of Treatment Process

2.4. DESCRIPTION OF PHYSICAL CONSTRUCTION/COMPONENTS OF THE EQUIPMENT

With a reactor containing up to 4 medium-pressure lamps, typical operating parameters during operation are:

• Treated flow	200 gpm to 3.6 MGD
• Maximum system pressure	150 psi (10 bar)
• Dose:	40 to 100 mJ/cm^2
• UV transmittance:	80% to 99%
• Head loss:	Up to 12 inches of H2O
• Water temperature:	0°C to 50°C 32°F to 122°F
• Ambient temperature:	0°C to 40°C 32°F to 104°F
• Ambient relative humidity:	5 to 95%

The UV reactor is made of corrosion-resistant materials, including stainless steel and EPDM and Viton materials for the seals, and quartz for the sleeves. The main components of the system are:

- 12-in reactor chamber with 150# ANSI Flanged connections
- 4 medium-pressure lamps
- 4 quartz sleeves
- piping connections, 12-in, 150 lb ANSI flange
- automatic cleaning system
- Control power panel for monitoring
- Three UV intensity sensors (two installed and one reference)
- Associated wiring
- feed and effluent storage tanks for MS2 phage seedings provided by MW/San Diego

The UV system has a total dry weight of 300 pounds. For shipping purposes, it can be moved with a forklift and mounted on flatbed trucks.

The system requires 480 V, 21 Amps current, 60 Hz, three phase 4 wire (+ ground).

2.5 RATES OF CHEMICAL CONSUMPTION, NATURE AND PRODUCTION RATES OF WASTE MATERIAL

2.5.1 Chemical Consumption

The only chemicals required during testing are chlorinating and dechlorinating agents required prior to discharging MS2 fortified reactor effluent to Lake Otay and use of a dechlorinating agent to quench residual chlorine in the filtered effluent or plant effluent used as feedwater to the UV reactor.
A chemical cleaning aid will be used in this testing. This food-grade acid cleaning agent is a proprietary chemical developed by Trojan Technologies Inc.. Trojan is currently seeking certification under NSF standard 60 for this agent. The cleaning agent is anticipated to be certified by the time the ETV report is completed. Each wiper collar contains 63 mL of the cleaning agent.

2.5.2 Waste Production and Physical and Chemical Nature of Wastes

Treated effluent produced during the MS2 bacteriophage challenge studies will be chlorinated and dechlorinated and then discharged into Otay Lake. Due to the short retention time of the UV reactor, it is estimated that no more than 5000 gallons will require disposal to the lake. During the remainder of the testing when challenge organisms are not added ahead of the reactor, the effluent will be returned to the treatment plant headworks.

2.6 LICENSING REQUIREMENTS

There are no special licensing requirements to operate the Trojan equipment.

2.7 STATEMENT OF PERFORMANCE CAPABILITIES

The statement of performance capabilities that will be tested in the ETV is:

The Trojan UVSwift unit Model 4L12 is capable of producing 2-log inactivation of MS2 bacteriophage in a filtered water with a transmittance of 85 ± 3% and a turbidity less than 5 NTU when operated at approximately 695 gpm (1 mgd) and at 80% of lamp power).

2.8 LIMITATIONS OF EQUIPMENT

The limitations of the UVSwift process for the treatment of treated drinking water with respect to source water quality are:

- Turbidity < 5 NTU
- Transmittance at 1 cm > 80%
- Flow rates< 3.6 MGD

Because particles and other dissolved UV light absorbing contaminants can interfere with UV light and reduce its inactivation efficiency, the NSF protocol is applicable to the use of UV technology for treating high quality water (<5 NTU turbidity and >80% transmittance at 1 cm) sources including treated surface water supplies of consistent high quality.

Within operational and source water quality limits, a lamp life of 5000 hours is expected.

Only a moderate level of operator skill is required for successful use of the system. Typically, a one-day training session will be sufficient.

Routine maintenance includes checking the buildup of scale or other contaminants on the surface of the UV lamp sleeves and verifying the UV irradiance sensor readings with a calibrated IL radiometer. Operational needs are described in more detail in Section 4 regarding pilot plant operation and field operations procedures. Key maintenance items include:

- Verifying UV irradiance sensor readings against a reference sensor if supplied by the manufacturer (readings should be within 5% of each other) or using a calibrated IL radiometer
- Recharging the cleaning solution
- Changing lamps

2.9 CHLORINATION VERSUS UV INACTIVATION

The protocol calls for a description of the applications and inactivation capabilities of the UV system compared to other equipment. For purposes of this FOD, "other equipment" is defined as conventional chlorination. A comparison of advantages and disadvantages of UV relative to chlorination is summarized in Table 2-1.

TABLE 2-1
ADVANTAGES AND DISADVANTAGES OF UV COMPARED TO CHLORINATION

Advantages	
UV Inactivation	**Chlorination**
• No known disinfection by-products are formed during UV irradiation	• Most common disinfectant used
• No undesirable chemical residual remains after inactivation	• Kinetics of bacterial and viral inactivation with chlorine well understood: mathematical models developed
• Need of handling and storage of hazardous chemicals is eliminated	• Simple to apply
• A dose of less than 10 mJ/cm^2 is capable of achieving 4 logs inactivation of pathogens such as *Giardia* and *Cryptosporidium*	• Low cost of treatment
• Simple operation of UV systems.	•
• UV inactivation is economically competitive with chlorination due to continuous advances in lamp technology	•
Disadvantages	
UV Inactivation	**Chlorination**
• Application limited to waters with turbidity less than 5 NTU and UV transmittance greater than 80%. Particles can absorb UV light and cause shielding.	• Formation of halogenated by-products (e.g. THMs and HAAs)
• The presence of compounds such as iron, manganese and nitrate may eventually lead to fouling of the lamps quartz sleeves or absorption of UV light. Periodic cleaning of the lamps is required.	• Not effective disinfectant for pathogens such as *Giardia* and *Cryptosporidium*
• Lamp aging results in lower UV output. Lamps need to be changed after about 5000 to 8000 hours.	• Safety concerns associated with handling and storage of chlorine gas
• Difficulty in measuring a UV dose due to very short time in inactivation chamber (approximately 5 to 8 seconds). Computational fluid dynamics modeling is used to assess the hydraulic retention time in the chamber.	• Use of sodium hypochlorite is a safe and equally effective alternative to chlorine gas. However chemical produced from chlorine gas or produced on-site which is labor-intensive
• Lack of standardization in measurement of intensity. Average intensity probes measure the UV light from a single location and it is difficult to determine average intensity with a UV reactor. Intensity if affected by % transmittance, the UV output and the reactor geometry.	• Requires costly compliance safety regulations: fire-code restrictions, building scrubbers
• Some short-circuiting problems exist in the hydraulics of the reactor	

SECTION 3
EXPERIMENTAL DESIGN

3.1 QUANTITATIVE AND QUALITATIVE EVALUATION CRITERIA

As defined by NSF, the objectives of the ETV are to evaluate equipment in the following areas:

1. Performance relative to the Manufacturer's stated range of equipment capabilities
2. Performance relative to the requirements of the Surface Water Treatment Rule and any other specific or anticipated water quality regulation
3. The impacts on performance of variations in feedwater quality (such as turbidity, NOM concentration, hardness, transmittance and other parameters)
4. The logistical, human and economic resources necessary to operate the equipment
5. The reliability, ruggedness, cost, range of usefulness and ease of operation of the equipment

In order to address these objectives, the ETV will employ the quantitative and qualitative factors listed in Table 3-1 in evaluating the UV equipment performance.

TABLE 3-1
EVALUATION CRITERIA FOR UV ETV TESTING

Quantitative Factors	Qualitative Factors
• Flow rate	• Ease of operation
• UV irradiance	• Safety
• Exposure time	• Susceptibility to environmental conditions
• UV sensor: comparison with a reference sensor	• Ruggedness
• Mechanical cleaning efficiency of lamps	• Impact of operator experience on successful operation
• Finished water quality	• Portability of equipment
• Range of feedwater quality that can be treated successfully	• Modular nature of equipment (ease of capacity expansion)
• Power consumption	
• Chlorine consumption required afterMS2 seedings	
• Length of operating cycle	
• Maintenance requirements	
• Required level of operator attention	
• Spatial requirements	
• Feed flow requirements	
• Discharge requirements	
• Waste disposal (none anticipated)	
• Capital cost	
• Operating cost	

3.2 WATER TREATMENT PROBLEMS ULTRAVIOLET INACTIVATION IS DESIGNED TO ADDRESS

The primary application of UV is the inactivation of microbial contaminants.

3.2.1 Inactivation of Microbial Contaminant

The protozoa *Giardia* and *Cryptosporidium* and viruses have been the principal organisms controlling disinfection regulations in the U.S. over the past decade. The SWTR was promulgated in 1986 to address the control of *Giardia* and viruses in surface water supplies. While traditional granular media filtration with disinfection can remove up to 4.5 logs of these protozoan cysts and up to 3.5 logs of viruses, their removal is not absolute. In addition, *Cryptosporidium* is particularly resistant to traditional water treatment disinfectants such as chlorine and chloramines. The Long Term 2 ESWTR will require specified levels of *Cryptosporidium*, as the current SWTR does for *Giardia* and viruses.

3.2.2 How UV light Disinfects Microbial Contaminants

As the water flows past the UV lamps in UV inactivation systems, the microorganisms are exposed to a lethal dose of UV energy. UV dose is measured as the product of UV light intensity times the exposure time within the UV lamp array. Microbiologists have determined the effective dose of UV energy (expressed in microwatt- seconds/cm^2) needed to destroy pathogens as well as indicator organisms found in wastewater. Utilizing UV lamps that emit UV light in the germicidal range from 200 to 300 nm, the Trojan UVSwift System is capable of disinfecting waterborne microorganisms including viruses, bacteria, and protozoa.

As discussed in Section 2, unlike chemical disinfection with chlorine or chloramines, ultraviolet light, at the germicidal wavelengths between 200 and 300 nanometers, alters the genetic (DNA) material in cells so that bacteria, viruses, molds, algae and other microorganisms can no longer reproduce. The microorganisms are considered inactive, and the risk of disease from them is eliminated. The effect of UV on nucleic acids prevents the organism from reproducing and eliminates its ability to cause infection. Resistant waterborne pathogens such as rotovirus undergo extensive inactivation at doses of 40 mJ/cm2, the current dose cited for use of UV in municipal water applications. The Manufacturer's equipment to be tested in the ETV (the Trojan UVSwift System) uses medium-pressure lamps which operate at higher intensity than conventional low-pressure lamps. UV systems use a wide variety of pulse rates, exposure times, number and/or irradiance of UV lamps, lamp cycles, spectral distribution of wavelength from the UV lamp, and degree of power supply/line conditioning required. The main objective of this testing is to bracket the proper operating parameters for treatment of the feed water during Verification Testing, including lamp fouling, lamp cycles, electrical power and virus rejection.

Further discussion of how UV disinfects microbial contaminants was included in Section 2.2.

3.2.3 Potential Users of UV Equipment

The use of UV technology has rapidly increased in popularity in the U.S. over the past decade. UV was initially used in place of chlorine for secondary wastewater disinfection in the eastern United States but has gained popularity as an alternative to chemicals for the inactivation for water reuse projects in California. Over 2,000 groundwater and surface drinking water installations in Europe and 1,000 groundwater installations in the United States rely on UV inactivation. Low-pressure UV technology has been employed in wastewater treatment and some drinking water treatment applications for inactivation of certain bacteria and viruses. Other UV technologies (including medium-pressure, high intensity, advanced and pulsed) have and are being developed to address these issues. As UV technology becomes more widely used, its treatment capability will become more widely accepted and more and more economical. Thus, potential users of UV equipment range from those with very small capacities (on the order of hundreds of gallons per day) to much larger capacities (up to 30 mgd).

UV as a primary disinfectant has no known impact on the formation of DBP's produced by secondary disinfection using chlorine or chloramine. In addition, pathogen inactivation by UV light is independent of the temperature and pH of the water, factors that directly impact chemical disinfectants. Other advantages of UV systems include no chemical requirements, no requirement for buildings for storage and handling of dangerous solutions and gases, greater safety for operators, greater effectiveness on a wide range of pathogens, fast treatment times (typically less than 10 seconds), lower operating cost as compared to other inactivation processes, reduced capital costs, simple operation and minimal system maintenance requirements. Potential users of UV equipment would thus include small to large-sized water systems with the need for microbial contaminant inactivation, those with limited operations staff and those in remote locations.

3.3 KEY TREATED WATER QUALITY PARAMETERS

3.3.1 Range of Key Water Quality Parameters the Equipment is Designed To Address

The operating range of the Manufacturer's UV system is summarized in Table 3-2.

TABLE 3-2
OPERATING RANGE OF MANUFACTURER'S ULTRAVIOLET SYSTEM

Parameter	Range
Flowrate	200 gpm-3.6 MGD
Dose	40-100 mJ/cm^2
Turbidity	<5 NTU
Transmittance	80%-99%
System Pressure	<150 psi (10.0 bar)
Head Loss	Up to 12-in of H2O
Water Temperature	0°C -50°C
Ambient Temperature	0°C -40°C
Linear Power Density	100-300 W/cm

3.3.2 Key Treated Water Quality Parameters for Evaluation of Equipment Performance

Key treated water quality parameters to be employed for evaluation of the Manufacturer's UV equipment are listed in Table 3-3.

TABLE 3-3
KEY TREATED WATER QUALITY PARAMETERS FOR UV EVALUATION

General Water Quality	Particulate Characterization	Organic Material Characterization	Microbiological Parameters
• pH • Alkalinity • Total Hardness • Temperature • Total and free chlorine • Nitrate • Ca and Mg • Iron and Mn • Total Suspended Solids (TSS) • Total Dissolved Solids (TDS)	• Turbidity	• Total Organic Carbon (TOC) • UV Absorbance at 254 nm (UV-254) or UV Transmittance • Color	• Total Coliforms and HPC • MS2 Virus

3.4 CALCULATION OF STATISTICAL UNCERTAINTY AND OPERATING PARAMETERS

3.4.1 Calculation of Statistical Uncertainty

For the water quality parameters described above, 95 percent confidence intervals will be calculated. The following equation will be used for confidence interval calculation:

$$\text{Confidence Interval} = \bar{X} \pm [t_{n-1,1-(\alpha/2)} \times (S/\sqrt{n})]$$

where:
- $\bar{X}$ = sample mean
- S = sample standard deviation
- n = number of independent measurements included in the data set
- t = Student's t distribution value with n-1 degrees of freedom
- α = significance level, defined for 95 percent confidence as: 1 - 0.95 = 0.05

According to the 95 percent confidence interval approach, the α term is defined to have the value of 0.05, thus simplifying the equation for the 95 percent confidence interval in the following manner:

$$\text{95 Percent Confidence Interval} = \bar{X} \pm [t_{n-1,0.975} \times (S/\sqrt{n})]$$

3.4.2 Definition and Calculation of Operational Parameters

UV Output
The amount of power (in the wavelength range of 200-300 nm) delivered from the lamp to the water and described in terms of watts (W) per lamp. The absolute free-standing UV power of the lamp is decreased by end losses and by transmission losses through the quartz sleeve. The UV output can be reduced because of lamp aging, water temperature, and lamp fouling.

UV Irradiance
The rate at which UV energy is incident on a unit area (e.g., 1 cm^2) in the water and described in terms of UV power per unit area, e.g., microwatts per square centimeter ($\mu W/cm^2$) or milliwatts per square centimeter (mW/cm^2).

UV Dose
The energy is quantified to a dose by multiplying the UV Irradiance by the actual exposure time:

$$\text{Dose } (\mu W\ sec/cm^2) = \text{UV Irradiance } (\mu W/cm^2) \times \text{Time (seconds)}$$

UV Transmittance
The ability of the water to transmit UV light. Transmittance of a water sample is generally measured as the percentage (%T) of transmitted light (I) to incident light (I_o)

through an operationally defined pathlength (L). Many commercially available spectrophotometers actually report the Absorbance (A) for a fixed pathlength (L) of the sample. Percent Transmittance and Absorbance can be related as:

$$\%T = 100 \times 10^{-(A/L)}$$

Many naturally occurring organic and inorganic constituents (e.g., natural organic matter, iron, and nitrate) will absorb energy in the UV wavelengths, thus reducing the transmittance of the water. This reduced transmittance often interferes with the inactivation efficiency of an UV system.

Low Pressure Lamps

Low-pressure lamps operate at a temperature between 38 and 49°C (100 and 120°F) to produce a near monochromatic radiation at 253.7 nm. These lamps typically have a linear power density of about 0.3 W/cm.

Medium Pressure Lamps

Medium pressure lamps produce a high intensity broad spectrum of UV light (extending over the 200-300 nm range of microbiological sensitivity with a maximum output at about 255 nm) with a higher Irradiance and operating at a much higher operating temperature (surface temperatures >500°C) than do low pressure Hg lamps. The linear power density is also much higher (typically 100-300 W/cm).

3.5 TESTING SCHEDULE

The ETV schedule is illustrated in Figure 3-1 on the following page. The testing and initial reporting are scheduled to take place over a total of approximately three months starting in March 2001, and being completed by the end of June 2001. The eight tasks described in detail in Section 4 will be performed during that period.

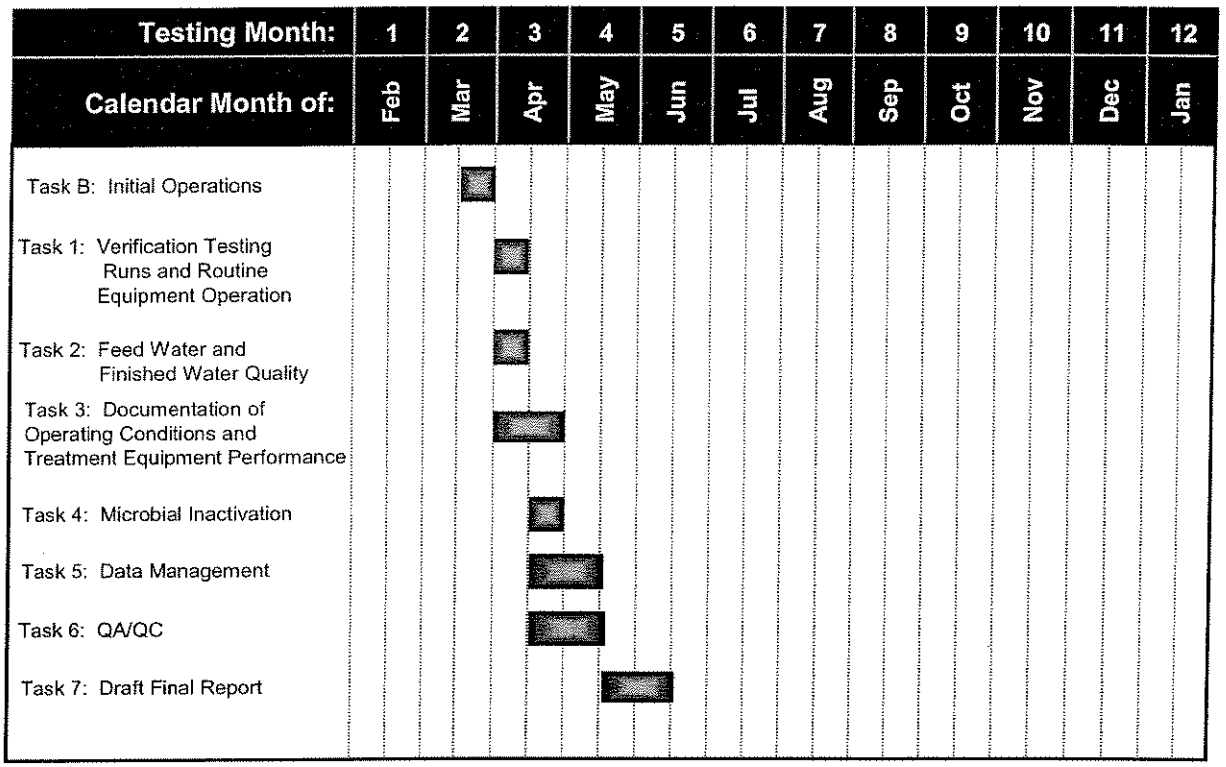

Figure 3-1
UV Verification Testing Schedule

3.6 OPERATIONS AND MAINTENANCE

The Manufacturer's Operations and Maintenance documentation for the UVSwift System will be reviewed. This review will be performed by the project engineers and the pilot plant operations staff during the verification testing, and results of this review will be included in the Draft and Final ETV Reports. In addition, the following aspects of operability will be addressed in the ETV Report, with respect to Tasks 1and 3 of the testing plan (described in Section 4.0):

- fluctuation of flow rates UV reactor – the time interval at which resetting is needed (i.e., how long can feed pumps hold on a set value for the feed rate?)
- monitoring/maintenance of proper feedwater temperature to cool the system
- monitoring cooling water flow
- presence of devices to aid the operator with flow control? A magnetic meter will be added by MW/San Diego.
- presence of devices to measure exposure time?
- presence of devices to measure total water throughput and total power usage?
- can cleaning of the lamps be done automatically?

- if automatic cleaning provided, could it be initiated by:
  - reaching a set value for UV irradiance?
  - a preset automatic timer?
- does remote notification to operator occur when cleaning happens?
- can operator observe cleaning?
- is sensor output measurement provided?
- Are hours of lamp operation provided? Are lengths of cycles provided?
- is rate of flow of raw water measured?
- is cleaning duration (time) variable?

SECTION 4
FIELD OPERATIONS PROCEDURES

This section describes the tasks to be completed for the ETV. The UV system will be operated 24 hours a day, seven days a week, with operations staff on-site at the pilot plant Monday through Sunday for one 8-hour shift each day. Tasks to be performed by the operations staff are described in detail below. All equipment was described and/or illustrated in Section 2.

4.1 INITIAL OPERATIONS

The purpose of this task is to provide preliminary information which will facilitate final test design and data interpretation. These tasks are to be conducted prior to Tasks 1 though 6.

Task A: Characterization of Feed Water

The objective of this recommended Initial Operations task is to obtain a chemical, biological and physical characterization of the feed water. A summary of Otay effluent water quality was presented in Section 1 of this document.

TASK B: Initial Tests Runs

During Initial Operations (two-week shake-down period), the equipment Manufacturer will verify that the unit doesn't leak when it fills with water and that the lamps don't overheat. Flow rates will be checked and number of lamps confirmed.

4.2 ENVIRONMENTAL TECHNOLOGY VERIFICATION TESTING PLAN

The equipment operation and design consists of six tasks, as specified by NSF. These tasks are:

Task 1: Verification Testing Runs and Routine Equipment Operation
Task 2: Feed Water and Finished Water Quality
Task 3: Documentation of Operating Conditions and Treatment Equipment Performance
Task 4: Microbial Inactivation
Task 5: Data Management
Task 6: Quality Assurance/Quality Control

The schedule for implementing each task was illustrated in Figure 3-1. An overview of each task is provided below.

4.2.1 Task 1: Verification Testing Runs and Routine Equipment Operation

The objective of this task is to characterize the technology in terms of efficiency and reliability. UV Disinfection treatment system equipment that includes UV lamp, reactor and sensor for measuring UV Irradiance will be operated for Verification Testing purposes with the operational parameters based on the results of the Initial Operations testing (Task B).

4.2.2 Task 2: Feed Water and Finished Water Quality

During each day of Verification Testing, feed water and treated water samples will be collected, and analyzed for parameters relevant to microbial enumeration or those affecting equipment performance, as outlined in Section 4.5, Table 4-1.

4.2.3 Task 3: Documentation of Operating Conditions and Treatment Equipment Performance

During each day of Verification Testing, operating conditions and performance of the water treatment equipment will be documented. This includes UV Irradiance, lamp and sensor fouling and cleaning applied and frequency, water flow (rate [gpm] and total flow), power usage, stability of power supply (surges, brown-outs, etc.).

4.2.4 Task 4: Microbial Inactivation

The objective of this task is to evaluate microbial inactivation capabilities of the UV drinking water treatment equipment that includes the UV lamp and reactor, by seeding the UV reactor with selected virus (in this case, MS2 bacterial virus). Inactivation capabilities will be evaluated in relation to operational conditions and the run time of the system.

4.2.5 Task 5: Data Management

The objective of this task is to establish the protocol for management of all data produced in the ETV and for data transmission between the FTO and the NSF.

4.2.6 Task 6: Quality Assurance/Quality Control

An important aspect of verification testing is the protocol developed for quality assurance and quality control. The objective of this task is to assure the high quality of all measurements of operational and water quality parameters during the UV ETV.

4.3 TASK A: CHARACTERIZATION OF FEED WATER

The chemical, biological and physical characteristics of the plant effluent water were summarized in Section 1. The plant effluent water consists of filtered water to which

were added chloramines and caustic for corrosion control. The following parameters were presented in Section 1:

- UV-254 absorbance and filtered transmittance, Total Chlorine, and Total Organic Carbon,
- Total Alkalinity, Calcium, Magnesium, and Hardness.

Task 2 provides a list characteristics that will be measured and recorded depending on the source of feed water to the UV equipment (treated surface water in this case). UV-254 absorbance will be measured daily during the 2-week initial operations period.

4.4 TASK B: INITIAL OPERATIONS

4.4.1 Introduction

During initial shake-down operations, the Manufacturer will evaluate equipment operations and determine the flow rates, number and/or Irradiance of UV lamps, setting of the lamps, or other factors applicable to the technology which provide effective treatment of the feed water. The Manufacturer may also want to work with Montgomery Watson and San Diego laboratory to perform blank or preliminary challenges and sampling routines to verify that sampling equipment can perform their required functions under normal operating conditions. This information may also indicate operating conditions under which the Manufacturer's stated performance capabilities are not met, or whether any threshold UV dose level can be determined. During this period, Montgomery Watson will determine the required concentration of reductant for chlorine residual quenching and will set-up all necessary on-line meters for monitoring of key parameters. A field inspection of equipment operations and sampling and field analysis procedures will be carried out during the initial test runs.

4.4.2 Objectives

The objective of these test runs is to bracket the proper operating parameters for treatment of the feed water during Verification Testing.

4.4.3 Work Plan

Conducting UV exposure tests on small batches (cuvettes) of feed water containing test organism can be a rapid method of roughly evaluating equipment performance and of bracketing effective UV dosages. Follow-up confirmation of initial batch testing by preliminary scaled back continuous flow tests is recommended.

4.4.4 Analytical Schedule

During the Initial Operations phase, the Montgomery Watson will conduct an initial on-site inspection of field operations, sampling activities and on-site analysis. The sampling

and analysis schedule for Verification Testing will be followed during the on-site inspection.

4.4.5 Evaluation Criteria

The Manufacturer will evaluate the data produced during the Initial Operations to determine if the water treatment equipment performed so as to meet or exceed expectations based on the statement of performance capabilities. If the performance was not as good as the statement of performance capabilities, the Manufacturer may wish to conduct more Initial Operations or to cancel the testing program.

4.5 TASK 1: VERIFICATION TESTING RUNS AND ROUTINE EQUIPMENT OPERATION

4.5.1 Introduction

Trojan's disinfection water treatment UVSwift system that includes UV lamps, inactivation reactor and sensors for measuring the UV light Irradiance will be operated for Verification Testing purposes with the operational parameters based on the Trojan's statement of performance capabilities.

4.5.2 Experimental Objectives

The objective of this task is to characterize the technology in terms of efficiency and reliability while operating under the conditions established during the Initial Operations testing. These conditions must represent the operating conditions for which the unit was designed. Trojan's unit is designed to operate at 200 gpm to 3.6 MGD. The testing will be done using flow rates which approximate these conditions, ranging from 200 gpm to 700 gpm. The experimental protocol will be designed so as to assess the unit adequately when operating under its design conditions.

4.5.3 Work Plan

Verification Testing Runs

The Verification Testing Runs in this task consist of continued evaluation of the treatment system, using the most successful treatment parameters defined in Initial Operations. Performance and reliability of the equipment will be tested during Verification Testing periods of a minimum of 320 hours (13 full days plus one 8-hour shift). Only Task 3 will be conducted during a 27-day period. The purpose of the 27-day test period is to assess the build up of potential scale or other contaminants on the surface of UV lamps and UV Irradiance sensors. Tasks 1 through 5 will be conducted simultaneously.

The feed-water to the UV unit will consist of plant filtered water (or plant effluent water) and is not expected to vary significantly over the course of a year. Therefore one round of ETV testing will be conducted on Trojan's UVSwift System.

4.5.4 Schedule

During Verification Testing, water treatment equipment will be operated continuously for a minimum of 320 hours (13 full days plus one 8-hour work shift) with interruptions in operation as needed for system maintenance.

4.5.5 Evaluation Criteria

The goal of this task is to operate the equipment for the 320-hour period, including time for lamp changing and other necessary operating activities, during Verification Testing. Data will be provided to substantiate the operation for 320 hours or more.

4.6 TASK 2: TEST RUNS FOR FEED WATER AND FINISHED WATER QUALITY

4.6.1 Introduction

Water quality data will be collected for the feed water and treated water as shown in Table 4-1 depending upon the source of feed water, during each day of Verification Testing. In this study, the feed water will consist of filtered surface water or plant effluent water (the choice of feedwater will depend on site restrictions). Montgomery Watson on behalf of Trojan Technologies Inc. will assure the sampling or measuring of the water quality parameters in Table 4-1 for a treated surface water. Montgomery Watson may use local personnel to assist in collection of samples or measurement of test parameters, but is responsible for their training to assure proper technique. Water quality goals and target inactivation goals for the water treatment equipment will be recorded in the Field Operations Document in the statement of capabilities.

Treated Surface water as Feed Water

For UV drinking water treatment systems that treat feed water from consistently and previously treated surface water (pre-oxidation, ferric chloride and cationic polymer coagulation, chlorination along with filtration), the parameters in Table 4-1 will be measured and recorded, except algae and endospores as previous treatment will likely have removed these contaminants. In addition, aluminum will not be measured since ferric chloride is added at the plant and since this parameter will likely occur in raw water.

TABLE 4-1
WATER QUALITY SAMPLING AND MEASUREMENT SCHEDULE

Parameter	Frequency	Feedwater	Effluent
Temperature	Daily	2	1
pH	Daily	1	1
Total Alkalinity	Semi-weekly	1	1
Hardness	Semi-weekly	1	1
Total Organic Carbon	Daily	1	1
UV-254 Absorbance	Daily	1	1
Turbidity	Daily at bench-scale	2	1
True Color	Semi-weekly	1	1
Nitrate	Semi-weekly	1	1
Iron, Mn, and Al	Semi-weekly	1	1
Total coliform or HPC	Daily ~~specified in capabilities~~	1	1
Free and Total Chlorine	Daily	1	1
MS2 Virus	See seeding procedures		

4.6.2 Experimental Objectives

For verification testing of inactivation of naturally existing microorganisms this task will allow determination of mean concentrations of organisms and their variability in the feed water. A list of a minimum number of additional water quality parameters to be monitored during equipment verification testing is provided in the Analytical Schedule section below and in Table 4-1.

4.6.3 Work Plan

Trojan Technologies Inc. will be responsible for establishing the plant testing operating parameters, on the basis of the Initial Operations testing. Many of the water quality parameters described in this task will be measured on-site by Montgomery Watson or by City personnel properly trained by the Field Testing Organization (refer to Table 4-2). Analysis of the remaining water quality parameters will be performed by the City of San Water Quality Laboratory certification No. 1058 and San Diego Marine Microbiology Laboratory California DHS State certification No. 2185. The methods to be used for measurement of water quality parameters in the field are listed in the Analytical Methods section below in Table 4-2. The analytical methods utilized in this study for on-site monitoring of feed water and effluent water qualities are described in Task 6, Quality Assurance/Quality Control (QA/QC). Where appropriate, the *Standard Methods*

reference numbers for water quality parameters are provided for both the field and laboratory analytical procedures.

TABLE 4-2
WATER QUALITY ANALYTICAL METHODS

Parameter	Facility	Standard Method
General Water Quality		
pH	On-Site	4500H+
Total Alkalinity	Laboratory	2320 B
Total Hardness	Laboratory	2340 C
Temperature	On-Site	2550 B *
Iron	Laboratory	3210 B, 3111 B, 3113 B
Nitrate	Laboratory	4110 B, 4500
Free and Total Chlorine	On-Site	Hach/ SM 4500 CL:G
Particle Characterization		
Turbidity (Bench-Top)	On-Site	2130 B
Organic Material Characterization		
TOC	Laboratory	5310 C
True Color	Laboratory	SM 2120 at 455 nm
UV Absorbance at 254 nm	Laboratory	5910 B
Microbiological Analyses		
~~Total Coliform~~	~~Laboratory~~	~~9215 B~~
HPC	Laboratory	9215 B
MS2 Virus	Laboratory	EPA ICR Method for Coliphage Assay

9221 12/4/01 (AS)

* Temperature measurements will be made from industrial VRW brand dual-scale bi-metal thermometers, permanently located in process flows, with gradation of at least 1 degree centigrade. The accuracy of these will be verified against an NIST calibrated thermometer each test period.

4.6.4 Water Quality Sample Collection

Water quality data will be collected at regular intervals during each period of testing, as noted in this section.

Many of the water quality parameters described in this task will be measured on-site. Analysis of the remaining water quality parameters will be performed by the City of San Diego analytical laboratory, and MS2-virus analyses will be performed by the City of San Diego Marine Microbiology Laboratory, both State-certified laboratories. The methods to be used for measurement of water quality parameters in the field are described in Table 4-2. The analytical methods utilized in this study for on-site monitoring of feedwater and effluent water quality are described in Section 4.9 for Task 6, Quality Assurance/Quality Control. Where appropriate, the Standard Methods reference numbers and for water quality parameters are provided for both the field and laboratory analytical procedures.

For the water quality parameters requiring analysis at the City of San Diego laboratory, water samples will be collected in appropriate containers (containing preservatives as applicable) prepared by the City of San Diego laboratory. These samples will be preserved, stored, shipped and analyzed in accordance with appropriate procedures and holding times. Original field sheets and chain-of-custody forms will accompany all samples shipped to the analytical laboratory. Copies of field sheets and chain-of-custody forms for all samples will be provided to NSF.

4.6.5 Analytical Schedule

During Verification Testing of UV treatment equipment, the feed water and treated water quality will be characterized by measurement of the water quality parameters listed above in Table 4-1.

Water Quality Sample Collection

The characteristics of feedwaters encountered during the testing will be explicitly stated in reporting the UV irradiance and dose. Monitoring for organic water quality parameters such as TOC and inorganic parameters such as alkalinity, hardness, iron, manganese and nitrate will be performed twice a week to evaluate their impact on UV inactivation efficiency. Turbidity, pH, temperature, UV-254 absorbance and free and total chlorine concentrations will be monitored daily.

On a daily basis, samples of raw and effluent waters will be collected for analysis of total coliform bacteria (TC). Sample volumes should be 1 L to obtain reliable counts. TC densities will be reported as most probable number per 100 mL (MPN/100 mL). If the TC count in the feed to the UV unit is too low rendering measuring the measurement of its inactivation impossible, samples will be collected for heterotrophic plate counts (HPC) on a daily basis.

4.6.6 Evaluation Criteria and Minimum Reporting Requirements

Evaluation of water quality in this task is related to meeting general water quality capabilities indicated by the Manufacturer.

ETV study results specific to the inactivation of microbiological contaminants criterion and other water quality parameters will be reported as follows:

1. Inactivation of indigenous bacteria (TC) or heterotrophic plate counts (HPC)
2. Table of feed and filtrate levels of TC or HPC bacteria during operation
3. Table of TC or HPC log inactivation during operation

4. Other water quality parameters:

Summary table of count, median, range and 95% confidence interval of feed and effluent concentrations of all measured water quality parameters during operation.

4.7 TASK 3: DOCUMENTATION OF OPERATING CONDITIONS AND TREATMENT EQUIPMENT PERFORMANCE

4.7.1 Introduction

Task 3 will be conducted over a minimum 27-day period. During each day of the testing period operating conditions will be documented. The performance of the Trojan UV UVSwift System will be documented, including total water throughput (from a totalizer) and total power usage (current will be measured from power usage at % power settings using an amp-clamp), UV Irradiance as measured by the manufacturer's UV irradiance sensor (sensor signal inputted into a data logger), hours of lamp operation (included on the panel), decrease in intensity output (a measure of fouling rate), frequency and type of mechanical cleaning. The performance of automatic mechanical wipers can be assessed by recording the UV intensity before and after cleaning after a fouling episode. No major lamp fouling is anticipated during the course of the study. One motor is used during chemical/mechanical cleaning and this motor has a total of 1/8 HP (90 W) power.

The true UV dose will not be measured as part of the equipment operating performance. The hydraulics and UV irradiance distribution vary greatly and would confound the UV dose calculation. For equipment using medium-pressure UV technology such as Trojan's UVSwift system, the operating conditions and equipment performance will be monitored using the sensors provided with the UV disinfection system. It is important that initial sensor output be maintained during the verification testing. The stability of the reactor output will be verified through periodic calibration of the sensor against a factory calibrated radiometer (1L1770/SED 240) or against a reference sensor if provided by the manufacturer, under the same water quality conditions. Significant drift in sensor performance that cannot be attributed to changing water quality conditions (5% on a weekly basis) will indicate a problem with the performance of the unit. Any change in reactor design, source of lamp or UV irradiance sensor constitutes a change in the UV disinfection system and repeat testing will be performed.

4.7.2 Objectives

The objective of this task is to accurately and fully document the operating conditions that are applied during treatment, and the performance of Trojan's UVSwift system. This task is intended to result in data that describe the operation of the equipment and data that can be used to develop cost estimates for operation of the equipment.

4.7.3 Work Plan

During each day of Verification Testing, treatment equipment operating parameters for UV radiation will be monitored and recorded on a routine basis. This will include a complete description of dechlorination if necessary, rate of flow and total flow (through a magnetic meter), and UV irradiance as measured by the Trojan's UV irradiance sensor and input of the analogue signal into data logger. Calibration of lamp irradiance sensors will be demonstrated and recorded. Electrical energy consumed by the UV treatment equipment will be measured and recorded. In addition, a complete description of each process will be given, with data on volume and detention time of each process stream at rated flow. The interval reactor volume provided by the manufacturer is 55 L.

An automatic device for monitoring UV irradiance will be included with the system. The analogue signal provided by the sensor will be inputted into a computer data logger. The determination of the minimum irradiance below which equipment shutoff should occur to assure adequate inactivation at all times will be determined during the Initial Testing period. When the irradiance drops below this value, flow can be shut off or a signal given to the operator indicating the need for cleaning or lamp replacement.

4.7.4 Schedule

Table 4-3 presents the schedule for observing and recording UV disinfection system operating and performance data.

TABLE 4-3
UV DISINFECTION SYSTEM OPERATING DATA

Operations Parameter	Action
Flow Rate	Check and record each 2 hours. Adjust when 10% above or below target. Record both before and after adjustment.
Exposure Time*	Record retention or cycle times when applicable. If variable, record degree of variation.
UV Irradiance	Check and record each 2 hours.
UV Sensor	Record output from in-line monitor. Record changes in lamp irradiance following each cleaning. If provided by a manufacturer, check against a calibrated radiometer or a reference sensor on a weekly basis.
Lamp Fouling/Cleaning System	Record frequency of sleeve cleaning, if applicable
Lamp Hours	Record Daily
Electric Power	Record daily the power level that reactor is operating at
Lamp Cycles	Record frequency of lamp on/off cycles

* Exposure time will be determined from the internal volume of UV inactivation chamber (55 L) and from the flowrate.

4.7.5 Evaluation Criteria

Where applicable (Flowrate, dose), the data developed from this task will be compared to statements of performance capabilities. In addition, results of operating and performance data will be tabulated for inclusion in the Verification Report.

4.8 TASK 4: DOCUMENTATION OF EQUIPMENT PERFORMANCE INACTIVATION OF MICROORGANISMS

4.8.1 Introduction

Inactivation of microorganisms is the primary purpose of UV drinking water treatment modules. Consequently, the effectiveness of the equipment at inactivating microorganisms introduced by seeding the feed water with MS2 bacteriophage will be evaluated in this task. The measurement of inactivation is a comparison of the percent of viable organisms in the feed stream with the percent of viable organisms in the effluent.

4.8.2 Experimental Objectives

The objective of this task is to operate the UVSwift system provided by Trojan Technologies Inc. and to characterize the technology in terms of efficacy at inactivation of microbial organisms. The challenge organisms to be tested will be MS2 bacteriophage.

4.8.3 Work Plan

Microbial Challenge Tests

Microbial challenge experiments will be conducted at full scale and not with pilot or prototype equipment at a constant flowrate one lamp setting to achieve 2-log inactivation of MS2 phage. Montgomery Watson will conduct the MS2 bacteriophage challenge studies in the field, and will submit the resulting samples to the City of San Diego state-certified laboratory.

Organisms Employed for Challenge Experiments

The organism selected for seeding experiments is MS2 bacterial virus. MS2 bacterial virus is not a human pathogen; however, this organism is similar in size (0.025 microns), shape (icosahedron) and nucleic acid (RNA) to polio virus and hepatitis. Since MS2 is not a human pathogen, live MS2 virus will be used in the seeding experiments. Organism stocks received from the suppliers will be stored refrigerated at 4°C in the dark until use in the seeding experiments.

Collimated Beam Testing

This testing will be conducted under the provision that the manufacturer will provide the collimated beam testing apparatus.

Because no means exist to measure UV dose delivered to a microbe in a UV reactor, the primary purpose of the microbial challenge experiment is to assess the inactivation efficacy of the UV reactor. However, such a goal cannot be attained without the proper controls to ensure the integrity of the microbial cultures used to test the reactor. There must be some assurance that the propagation, harvesting, and preparation of the microbial stock results in the production of a homogenous, nondispersed suspension of microorganisms before the material is introduced into the UV reactor. The purity of the feed stock will be checked by a smaller bioassay (dose response). To establish a dose-response curve, collimated-beam apparatus tests will be carried out with seeded feed water used in reactor testing within 24 hours of the reactor test. The exposed samples will be plated on the same day as the collimated beam

apparatus test. In general, the initial concentration of MS-2 should be about 2 logs higher than the number of logs of inactivation that are to be achieved. MS-2 samples will be collected at the specified sampling points to verify that adequate mixing occurs between the injection port, inlet sampling port and outlet sampling port. A minimum of five (5) sub-samples will be exposed for a range of times calculated to achieve a range of UV doses from 20 to 150 mJ/cm^2, with a minimum interval of 25 mJ/cm^2. The exposed sample will be plated in triplicate. The water quality matrix used for collimated-beam apparatus testing and UV reactor validation should be identical. For each test, the following will be measured: the UV transmittance and turbidity in each sample, the initial MS-2 concentration and log inactivation, the UV intensity before and after each test, and the exposure time. The UV dose is calculated as follows:

$$D = I_o t \, [(1-e^{-kd})/kd]$$

Where :
D= UV dose at 254 nm (mJ/cm^2)
t = Exposure time (seconds)
I_o = Incident intensity at the surface of the sample (mW/cm^2)
K = Absorbance coefficient (1/cm)
d = Depth of the sample (cm)

The collimated-beam results will be plotted on a graph of the UV dose (mJ/cm^2) versus the log inactivation.

Spiking Protocols

The total number of MS2 organism required for spiking will depend on the reactor volume (55 L), the water flow rate, the UV transmittance on the day of the seeding challenge, and the desired steady-state concentration of microbiological contaminants in the reactor. The Table and Figure in Appendix B will be used as a guideline. A 4-5 log virus concentration will be seeded in the feedwater to the UV system. This will provide adequate concentration to show 2-log inactivation against the effluent analyses detection limit would be necessary to satisfy the Surface Water Treatment Rule (SWTR) requirement. The duration of the MS2 seeding will range from 5 to 10 minutes. For all organisms, the laboratory supplying the organisms (Montgomery Watson Applied Research Laboratory) and performing the viability studies (City of San Diego Laboratory) will be experienced in challenge testing and be able to predict initial dosages required to overcome any inherent experimental losses. Microbial challenges will be conducted by feed stream injection. For evaluation of inactivation of virus negatively affected by chlorine, dechlorination will be required. After completing the seedings, a chlorinated water dosed with 10 to 20 mg/L free chlorine will be allowed to flow for a period of 10 minutes. Dechlorination will then be conducted by allowing a water sample dosed with quenching agent to flow through the

reactor for a period of approximately 10 minutes. A sample for MS2 virus will be collected in duplicate for control.

In-Line Injection

The feed to the test unit will be plumbed with a check-valve equipped injection port. A one-Liter carboy equipped with a bottom dispensing port will feed this injection port by means of a metering pump (diaphragm or peristaltic or equivalent) via siliconized or Teflon tubing. The pump will be capable of fluid injection into the pressurized system feed line for the duration of the test, at a measurable and verifiable rate such that the one-liter carboy is depleted coincident with the end of the test run. Since dechlorination is necessary, a chemical injection pump feeding a port and adequate contact mixing will be required upstream of the microorganism injection port. This pump will meter in a solution of sodium bisulfite adequate to dechlorinate the feed water over the course of the test run.

The spike carboy will contain a magnetic stir bar and will be filled with one Liter of system water (dechlorinated if necessary) and placed on a stir plate. The prepared batch of spike organisms will be agitated by methods such as vortexing and sonication and added to the stirring carboy. Once appropriate flow has been initiated through the test system, the test unit is operating properly, sample collection systems are readied, and complete dechlorination (<0.05 mg/L) has been verified at both the influent and effluent sample sites, the injection pump can be started. During the course of the test run, monitoring of the system flow rate and spike injection rate will be performed and adjustments made to maintain test design. UV output will also be recorded. The state-certified City of San Diego laboratory will analyze the microbial samples. Samples will be collected and processed according to the instructions of the laboratory. Upon completion of sample preparation, the samples will be transported to the laboratory for analysis.

Details of Seeding Challenges

During each MS2 seeding experiment, a minimum of three samples from the feedwater and three samples from the treated water will be collected. The first effluent sample during each treatment cycle will be collected after a minimum of 5 theoretical hydraulic detention times have passed through the system (from injection point to sampling port). Each sample will be collected in sterile 250-mL bottles, will be stored at 1°C and processed within 24 hours.

Three experiments (replicates) will be performed, plus one additional seeding challenge will all reactor lamps turned off, for a total of 24 MS2 samples (Table 4-4). Each challenge will be hydraulically independent of any previous challenge by insuring a minimum of 5 theoretical hydraulic detention times.

TABLE 4-4
SEEDING CHALLENGE DETAILS

Experiment	# Feedwater Samples	# Effluent Samples
Challenge # 1	3	3
Challenge # 2	3	3
Challenge # 3	3	3
Lamps Off	3	3

As a note, each challenge shall be hydraulically independent of any previous challenge by insuring a minimum of 5 theoretical hydraulic detention times.

Test Operation and Sample Collection

Test Stream Sampling

Sample ports will be provided for the feed water stream (spiked with concentrations of microbiological contaminants) and the UV-treated water stream at the contactor effluent. For MS2 viral seeding experiments, methods for organism spiking and sample collection will be consistent with EPA ICR Method for Coliphage Assay. The duration of the seeding will be approximately 5 to 10 minutes, and three samples will be collected at the feedwater and at the effluent. The target MS2 concentration in the feedwater will range from 5 to 6 logs.

The sample tap(s) will be flamed one minute prior to initiating any virus sample collection. Taps will be flowing for at least one minute prior to sample collection.

Chlorine Residual Analysis

When dechlorinating, residual samples of the feed water will be collected immediately after the grab samples or at regular intervals throughout the test run. These samples will be analyzed for chlorine residual immediately. In virus inactivation tests where chlorine would affect test organisms and synergistic UV/chlorine effects are not being evaluated, any sample showing >0.05 mg/L residual will void the entire spike test.

Post-Test Sample Handling

Samples will then be handled and prepared for delivery to the City of San Diego analytical laboratory as directed by that laboratory. Montgomery Watson will then take steps to contain and/or sanitize any organisms remaining in the pilot system. Sanitization will be done using chlorination/dechlorination before discharge into Otay Lake. Following the MS2 viral challenges and collection of samples, a water chlorinated with 10-20 ppm chlorine will be allowed to flow

period of 10 retention time using a bisulfite solution. One sample will be collected from the effluent in duplicate and analyzed for MS2 virus.

Experimental Quality Control

Process Control

A second MS2 seeding round of testing will be carried out identical to the above (4.8.3), with the UV lights turned off (Table 4-4). The purpose of this testing is to evaluate any cumulative effects of the disinfection system stream, spiking and sampling processes, and sample handling on organism viability. This testing will not occur until elimination of sanitizing agents and inactivated target organisms, whose presence could affect subsequent tests of the unit, has been demonstrated. The process control samples should show minimal inactivation of the target organism(s) relative to the trip control sample. Significant inactivation of the process control sample indicates that some aspect of the process other than UV contributes to inactivation of the test organism(s), and re-testing will be performed.

Trip Control

For tests utilizing spike challenges, a replicate or subsample of the spike dose will accompany the actual spike dose from the analytical laboratory, including all preliminary processes of dose preparation pre-enumeration, shipping, and preparation for spiking, through return to the laboratory for enumeration and viability baseline assessment. The trip control samples should show minimal inactivation of the target organism(s). Significant inactivation of the trip control sample indicates that some aspect of the handling, from preparation to testing, contributed to inactivation of the test organism(s). Significant inactivation of trip control samples will result in re-testing.

4.8.4 Microbiological Viability Analysis

The selected viability method will be EPA ICR Method for Coliphage Assay. City of San Diego state-certified laboratory will analyze samples for MS2 analyses.

4.8.5 Analytical Schedule

Water Quality Sampling
The microbial seeding experiments will be conducted on a day during which semi-weekly water quality sampling is to be conducted.

4.8.6 Evaluation Criteria and Minimum Reporting Requirements

Evaluation criteria for Task 4 are the inactivation of the seeded MS2 virus. Results specific to these evaluation criteria will be reported as follows:

- Virus Inactivation
  1. Table of all feedwater and effluent MS2 levels including flowrate and UV output
  2. Bar chart of log inactivation of seeded MS2.

  Log inactivation equations and calculations will be presented in the final report.

4.9 TASK 5: DATA MANAGEMENT

4.9.1 Introduction

The data management system used in the Verification testing program will involve the use of computer spreadsheet software and manual or automated recording operational parameters for the UV water treatment equipment on a daily basis.

4.9.2 Experimental Objectives

The objectives of this task are 1) to establish a viable structure for the recording and transmission of field testing data such that Montgomery Watson provides sufficient and reliable operational data for the NSF for verification purposes, and 2) to develop a statistical analysis of the data, as described in "Protocol For Equipment Verification Testing of Microbiological Contaminant Inactivation by Packaged and/or Modular Drinking Water Treatment Systems for Small Public or Private Water Supplies".

4.9.3 Work Plan

A data acquisition system will be used for automatic entry of on-line study testing data into computer databases. Specific parcels of the computer databases for operational and water quality parameters are then downloaded by manual importation into Excel as a comma delimited file. These specific database parcels will be identified based upon discrete time spans and monitoring parameters. In spreadsheet form, the data will be manipulated into a convenient framework to allow analysis of water treatment equipment operation. At a minimum, backup of the computer databases to diskette will be performed on a bi-weekly basis.

For parameters for which electronic data acquisition is not possible, field testing operators will record data and calculations by hand in laboratory notebooks (daily measurements will be recorded on specially-prepared data log sheets as appropriate). The original notebooks and specially-prepared data log sheets will be stored on-site; photocopies will be forwarded to the project engineer of the FTO at least once every

week during testing. This protocol will not only ease referencing the original data, but offer protection of the original record of results. Field operating logs will include a description of the UV equipment operation (description of test runs, description of any problems or issues, etc.); such descriptions will be provided in addition to experimental calculations and other items. All logbooks entries will be made in black water insoluble ink. All corrections in any notebook will be made by placing one line through the erroneous information and initialing the change. Dates will be included with the entries.

The database for the project will be set up in the form of custom-designed spreadsheets. The spreadsheets will be capable of storing and manipulating each monitored water quality and operational parameter from each task, each sampling location, and each sampling time. All data from the laboratory notebooks and data log sheets will be entered into the appropriate spreadsheets. Data entry will be conducted by the project engineer on-site. All recorded calculations will also be checked at this time. Following data entry, the spreadsheet will be printed out and the print-out will be checked against the handwritten data sheet. Any corrections will be noted on the hard-copies and corrected on the screen, and then a corrected version of the spreadsheet will be printed out. Each step of the verification process will be initialed by the field testing operator or engineer performing the entry or verification step.

Each experiment (e.g. each challenge test run) will be assigned a run number which will then be tied to the data from that experiment through each step of data entry and analysis. As samples are collected and sent to the City of San Diego laboratory, the data will be tracked by use of the same system of run numbers. Data from the outside laboratories will be received and reviewed by the field testing operator. These data will be entered into the data spreadsheets, corrected, and verified in the same manner as the field data.

Further details regarding data management are provided in Section 6.

4.9.4 Statistical Analysis

Water quality developed from grab samples collected during test runs according to the Analytical Schedule in Task 4 of this Test Plan shall be analyzed for statistical uncertainty. Montgomery Watson will calculate 95% confidence intervals for grab sample data obtained during Verification Testing.

4.10 TASK 6: QUALITY ASSURANCE/QUALITY CONTROL

4.10.1 Introduction

Quality assurance and quality control of the operation of the UV equipment and the measured water quality parameters will be maintained during the ETV.

4.10.2 Experimental Objectives

The objective of this task is to maintain strict QA/QC methods and procedures during the ETV. When specific items of equipment or instruments are used, the objective is to maintain the operation of the equipment or instructions within the ranges specified by the Manufacturer or by *Standard Methods*. Maintenance of strict QA/QC procedures is important, in that if a question arises when analyzing or interpreting data collected for a given experiment, it will be possible to verify exact conditions at the time of testing.

4.10.3 Work Plan

Equipment flow rates and associated signals will be documented and recorded on a routine basis. A routine daily walk-through during testing will be performed to verify that each piece of equipment or instrumentation is operating properly. On-line monitoring equipment, such as flow meters, will be checked to confirm that the read-out matches the actual measurement (i.e., flow rate) and that the signal being recorded is correct. The items listed below are in addition to any specified checks outlined in the analytical methods.

QA/QC Verifications Performed at Start and End of Testing Period

- Flow meters/rotameters (clean equipment to remove any debris or biological buildup and verify flow volumetrically to avoid erroneous readings). In addition, flow meters will be cleaned every two weeks.

QA/QC Verifications Performed Each Test Period

These verifications will be conducted before each testing period begins:

- Differential pressure transmitters (verify gauge readings and electrical signal using a pressure meter)
- Tubing (verify good condition of all tubing and connections, replace if necessary)
- Data acquisition (verify electronically acquired data matches displayed values).

4.10.4 On-Site Analytical Methods

The analytical methods utilized in this study for on-site monitoring of feedwater and treated water quality are described in the section below. Other details regarding sample collection are provided in Section 5.5.1.

pH

Analyses for pH will be performed according to Standard Method 4500-H+. A two-point calibration of the pH meter used in this study will be performed once a day when the instrument is in use. Certified pH buffers in the expected range (7.0 and 10.0) will be used. The pH probe will be stored in the appropriate solution as defined in the instrument manual.

Temperature

Temperatures readings will be made through the use of a VWR brand dual-scale bi-metal dial thermometer, with temperature range of 0-50°C and ±1% over range. Feed water temperatures will be obtained at least once daily. The thermometer will be calibrated weekly against a precision thermometer certified by the National Institute of Standards and Technology (NIST). Readings for temperature will be conducted in accordance with *Standard Method* 2550.

True Color

True color will be measured with a spectrophotometer at 455 nm, using a *Standard Methods* 2120 procedure. Samples will be collected in clean plastic or glass bottles and analyzed as soon after collection as possible. If samples cannot be analyzed immediately they will be stored at 4° C for up to 24 hours, and then warmed to room temperature before analysis. The filtration system described in *Standard Methods* 2120 C will be used, and results expressed in terms of Pt. Co. color units.

Turbidity

Turbidity analyses will be performed according to Standard Method 2130 with bench-top turbidimeters.

During each verification testing period, the bench-top turbidimeters will be left on continuously. All glassware used for turbidity measurements will be cleaned and handled using lint-free tissues to prevent scratching. Sample vials will be rinsed and stored with DI water to prevent deposits from forming on the bottom surface of the cell.

Any problems experienced with the turbidity monitoring instruments will be documented. Any subsequent modifications or enhancements made to the monitoring instruments will also be documented.

Bench-top Turbidimeters: Grab samples will be analyzed using a bench-top turbidimeter. Readings from this instrument will serve as reference measurements throughout the study. The bench-top turbidimeter will be calibrated according to the manufacturers recommended procedure. Secondary turbidity standards will be read after primary calibration. Secondary standards will be used on a daily basis to verify calibration of the turbidimeter.

The method for collecting grab samples will consist of running a slow, steady stream from the sample tap, triple-rinsing a dedicated sample beaker in this stream, allowing the sample to flow down the side of the beaker to minimize bubble entrainment, double-rinsing the sample vial with the sample, carefully pouring from the beaker down the side of the sample vial, wiping the sample vial clean, inserting the sample vial into the turbidimeter, and recording the measured turbidity.

When cold water samples cause the vial to fog and prevent accurate readings, the vial must be allowed to warm up by partial submersion into a warm water bath for approximately 30 seconds.

Organic Parameters: Total Organic Carbon and UV-254
Samples for analysis of TOC and UV-254 will be collected in glass bottles supplied by the City of San Diego laboratory and transported via carrier with an internal cooler temperature of approximately 2 to 8°C to the analytical laboratory.

Microbial Parameters: Total Coliforms and HPC
Samples for analysis of TC or HPC will be collected in bottles supplied by the City of San Diego laboratory and transported with an internal cooler temperature of approximately 2 to 8°C to the analytical laboratory. TC or HPC densities will be reported as most probable number per 100 mL (MPN/100 mL) and will be analyzed within 24 hours of collection.

4.10.5 Chemical and Biological Samples Shipped off-Site for Analysis

Microbial Parameters: Viruses
Samples for analysis of virus MS2 will be collected in bottles supplied by the analytical laboratory. Microbiological samples will be refrigerated at approximately 2 to 8°C immediately upon collection. Such samples will be shipped in a cooler and maintained at a temperature of approximately 2 to 8°C during shipment. Samples will be processed for analysis by the state-certified City of San Diego laboratory within 24 hours of collection. The laboratory will keep the samples at approximately 2 to 8°C until initiation of processing.

The Method for assessing the viability of the MS2 virus will be the EPA ICR Method for Coliphage Assay.

Inorganic Samples
Inorganic chemical samples, including alkalinity, hardness, iron, and manganese, will be collected and preserved in accordance with *Standard Method* 3010B, paying particular attention to the sources of contamination as outlined in *Standard Method* 3010C. The samples will be refrigerated at approximately 4°C. Samples will be processed for analysis by state-certified City of San Diego laboratory within holding times. The laboratory will keep the samples at approximately 4°C until initiation of analysis.

4.11 OPERATION AND MAINTENANCE

Montgomery Watson will obtain Trojan Technologies Inc.s' supplied Operation and Maintenance (O&M) manual to evaluate the instructions and procedures for their applicability during the verification testing period. The following are recommendations for criteria for O&M Manuals for drinking water treatment equipment employing UV technology.

4.11.1 Maintenance

The Manufacturer will provide readily understood information on the recommended or required maintenance schedule for each piece of operating equipment including, but not limited to, the following, where applicable:

- lamps
- quartz sleeves or tubes
- instruments, such as UV sensors
- electrical equipment
- mechanical wipers

The Manufacturer will also provide readily understood information on the recommended or required maintenance for the treatment chamber.

4.11.2 Operation

The Manufacturer will provide readily understood recommendations for procedures related to proper operation of the UVSwift system. Among the operating aspects that should be addressed in the O&M manual are:

UV Lamps:
- Hours of operation – how this should be checked
- UV irradiance – how to check and/or calibrate
- cleaning – how and when to clean
- changing – how to determine need to change

Exposure Time:
- correlation of flowrate and exposure time

Cooling Water System: feedwater will cool the system
- monitoring/maintenance of proper water temperature

The Manufacturer will provide a troubleshooting guide; a simple checklist of what to do for a variety of problems, including but not limited to:
- no flow to unit
- sudden change in flow to unit
- no electric power
- loss of cooling water flow (feedwater)
- filtered water turbidity too high
- sudden reduction in UV irradiance
- automatic operation (if provided) not functioning
- valve stuck or will not operate

SECTION 5
QUALITY ASSURANCE PLAN

The elements of the Quality Assurance Plan for the ETV are:

- Measurement of precision and accuracy
- Methodology for use of blanks
- Performance evaluation samples
- Duplicate samples
- Data correctness
- Calculation of indicators of data quality
- Data reporting
- Corrective Action Plan

5.1 METHODOLOGY FOR MEASUREMENT OF PRECISION AND ACCURACY

5.1.1 Precision and Accuracy for Water Quality Parameters

Table 5-1 summarizes the methodology to be used in the ETV for the measurement of precision and accuracy for each water quality analysis performed for the pilot testing.

TABLE 5-1
METHODOLOGY FOR MEASUREMENT OF PRECISION AND ACCURACY

Parameter	Precision	Accuracy
pH (report to nearest 0.1 pH unit)	• Two measurement per week in duplicate (= 100% of samples)	• Daily* 2-point calibration with certified pH buffers in range of measurements (7.0 and 10.0)
Temperature (report to nearest 0.1°C)	• Two measurements per week in duplicate (= 20% of samples)	• Initial and monthly verification against an NIST thermometer.
Turbidity: Bench Top (report to nearest 0.05 NTU for filtrate)	• One feedwater and one effluent measurement per day in duplicate	• Initial and weekly calibration with primary standards of 0.1, 0.5 • and 5.0 NTU • Daily* calibration verification with secondary standards.

Updated table received 6/29/01

TABLE 5-1 (CONTINUED)
METHODOLOGY FOR MEASUREMENT OF PRECISION AND ACCURACY

Parameter	Precision	Accuracy
Alkalinity (report to nearest 1 mg/L as $CaCO_3$)	• One sample in duplicate/week. Switch between feed and effluent	• Use procedures of the City of San Diego laboratory
Total Hardness (report to nearest 1 mg/L as $CaCO_3$)	• One sample in duplicate/week. Switch between feed and effluent	• Use procedures of the City of San Diego laboratory
Calcium Hardness (report to nearest 1 mg/L as $CaCO_3$)	• One sample in duplicate/week. Switch between feed and effluent	• Use procedures of the City of San Diego laboratory
Nitrate	• One sample in duplicate/week. Switch between feed and effluent	• Use procedures of the City of San Diego laboratory
Iron and Manganese	• One sample in duplicate/week. Switch between feed and effluent	• Use procedures of the City of San Diego laboratory
Total Dissolved Solids (report to nearest 1 mg/L)	• One sample in ~~duplicate/week. Switch~~ between feed and effluent	• Use procedures of the ~~City of San Diego~~ laboratory
Total Suspended Solids (report to nearest 1 mg/L)	• One sample in ~~duplicate/week. Switch~~ between feed and effluent	• Use procedures of the ~~City of San Diego~~ laboratory
Total Organic Carbon (report to nearest 0.1 mg/L)	• One sample in duplicate/week. Switch between feed and effluent	• Use procedures of the City of San Diego laboratory
UV Absorbance (report to nearest 0.01 cm^{-1})	• One sample daily in duplicate.	• Use procedures of the City of San Diego laboratory
TC or HPC (report to 2 significant figures)	• One sample per week in duplicate.	• Use procedures of the City of San Diego laboratory

Removed - per email from Mr. James DeCaiolis 10/23/01 (Mont. Water)

"Daily" refers to each day the plant is staffed (7 days a week).

See revised table from 6/29/01 (email)

TABLE 5-1 (CONTINUED)
METHODOLOGY FOR MEASUREMENT OF PRECISION AND ACCURACY

Parameter	Precision	Accuracy
Alkalinity (report to nearest 1 mg/L as $CaCO_3$)	• Each semi-weekly sample in duplicate.	• Use procedures of the City of San Diego laboratory
Total Hardness (report to nearest 1 mg/L as $CaCO_3$)	• Each semi-weekly sample in duplicate.	• Use procedures of the City of San Diego laboratory
Calcium Hardness (report to nearest 1 mg/L as $CaCO_3$)	• Each semi-weekly sample in duplicate.	• Use procedures of the City of San Diego laboratory
Nitrate	• Each semi-weekly sample in duplicate.	• Use procedures of the City of San Diego laboratory
Iron and Manganese	• Each semi-weekly sample in duplicate.	• Use procedures of the City of San Diego laboratory
Total Dissolved Solids (report to nearest 1 mg/L)	• Each semi-weekly sample in duplicate.	• Use procedures of the City of San Diego laboratory
Total Suspended Solids (report to nearest 1 mg/L)	• Each semi-weekly sample in duplicate.	• Use procedures of the City of San Diego laboratory
Total Organic Carbon (report to nearest 0.1 mg/L)	• Each semi-weekly sample in duplicate.	• Use procedures of the City of San Diego laboratory
UV Absorbance (report to nearest 0.01 cm^{-1})	• One sample daily in duplicate.	• Use procedures of the City of San Diego laboratory
TC or HPC (report to 2 significant figures)	• One sample per week in duplicate.	• Use procedures of the City of San Diego laboratory

"Daily" refers to each day the plant is staffed (7 days a week).

5.1.2 Precision and Accuracy for Operational Parameters

The operational parameters in the ETV include flowrate, UV irradiance measured by in-line sensors and reference radiometer, lamp cleaning frequency and lamp power usage.

Flow Meters and Rotameters
Water flow rates will be verified for all flow meters and rotameters before UV system start-up according to the following schedule:

- On-line turbidimeters: daily
- Other flow meters and rotameters: weekly

The verification will be performed by bucket tests using calibrated containers or graduated cylinders and a stopwatch. The duration of the bucket tests will be one minute or longer, depending on the magnitude of the flow rate.

UV Sensors
UV sensor readings will be calibrated against a certified IL radiometer on a weekly basis. The manufacturer must provide a suitable mounting system to allow the reference radiometer to measure a precise reactor location at an identical angle of insertion each time it is used.

5.2 METHODOLOGY FOR USE OF BLANKS

5.2.1 Method Blanks

The methodology for use of method blanks is summarized in Table 5-2.

TABLE 5-2
METHODOLOGY FOR USE OF METHOD BLANKS

Method	Methodology for Blanks
pH	• Purchased certified pH buffers will be used; no use of blanks.
Temperature	• No use of blanks.
Turbidity	• Purchased reagent-grade ultra-pure water will be kept in stock at the pilot plant for use as a blank if necessary to verify proper operation of the instrument.
Alkalinity	• Blanks will be used in accordance with the procedures of the City of San Diego laboratory.
Total Hardness	• Blanks will be used in accordance with the procedures of the City of San Diego laboratory.
Calcium Hardness	• Blanks will be used in accordance with the procedures of the City of San Diego laboratory.
Nitrate	• Blanks will be used in accordance with the procedures of the City of San Diego laboratory.
Iron and Manganese	• Blanks will be used in accordance with the procedures of the City of San Diego laboratory.

TABLE 5-2 (CONTINUED)

Method	Methodology for Blanks
Total Dissolved Solids	• Blanks will be used in accordance with the procedures of the City of San Diego laboratory.
Total Suspended Solids	• Blanks will be used in accordance with the procedures of the City of San Diego laboratory.
Total Organic Carbon	• Blanks will be used in accordance with the procedures of the City of San Diego laboratory.
UV Absorbance at 254 nm	• Blanks will be used in accordance with the procedures of the City of San Diego laboratory.
Total Coliform or HPC	• Blanks will be used in accordance with the procedures of the City of San Diego laboratory.

5.2.2 Spiked Samples

Spiked samples will be utilized at City of San Diego laboratory. Spiked samples are not applicable for the analyses performed on-site at the field (pH, temperature, and turbidity). One spiked sample is used per QA/QC batch. Each batch consists of approximately 10 to 20 samples analyzed for a single parameter.

5.2.3 Microbiological Travel Samples

The City of San Diego laboratory will perform a travel viability and enumeration study at the start of the ETV by shipping samples dosed with MS2 virus concentrations to the test site and having the bottles returned after 24 hours on site. At the time of return receipt by the laboratory, the viability of the organisms shall be determined.

5.2.4 MS-2 Control Samples

Following chlorination and dechlorination of the UV reactor, one sample of MS-2 virus will be collected in duplicate to verify that no MS-2 viruses are remaining in the unit.

5.3 PERFORMANCE EVALUATION SAMPLES

Performance evaluation samples will be analyzed in accordance with the procedures of the City of San Diego laboratory which is performing all off-site analyses. For the on-site analyses, purchased proficiency samples will be analyzed every week for turbidity using the bench-top turbidimeter during the UVSwift operation for the ETV.

5.4 SAMPLES TO BE ANALYZED IN DUPLICATE

Duplicate samples to be submitted for analysis were shown in Table 5-1. For on-site analyses that are grab sampled (turbidity and pH), duplicate analyses will be performed each time the instruments are calibrated. For all other parameters, duplicates will be

conducted as indicated in Table 5-1. If not specified in Table 5-1, the sampling location for each duplicate sample will alternate between feedwater and effluent.

5.5 DATA CORRECTNESS

Data correctness refers to data quality, for which there are four indicators:

- Representativeness
- Statistical Uncertainty
- Accuracy
- Precision

5.5.1 Representativeness

As specified by NSF, representativeness of water quality samples for the ETV will be ensured by executing consistent sample collection procedures, including:

- Sample locations
- Timing of sample collection
- Sampling procedures
- Sample preservation
- Sample packaging
- Sample transport.

Sample Locations
Sample locations for all water quality parameters were specified in Section 4, Table 4-2. Specifically, sample locations for the UV system include the feedwater and the treated water. Only one specific sample tap will be used at each of these sample locations.

Timing of Sample Collection
In a UV study, the timing of sample collection is not as critical as in, for example, a granular media filtration pilot study in which the filter run time can influence the quality of water produced by the filter. For a UV study, there is no filter maturation time, stable period of filter operation or turbidity breakthrough period. Thus, the effluent samples will be collected any time during the operating cycle of the UV system when the lamps are not being cleaned. Feedwater and effluent water quality samples will be collected each morning; timing of feedwater sample collection will not affect results. To the maximum extent possible, samples will be collected each day at a similar time so that the operators can maintain a consistent daily routine.

In the event that a storm event occurs, or some other unusual conditions or rapid change in feedwater quality, additional feedwater and effluent sampling will be performed within the staffing constraints of the ETV test. In this manner, all critical feedwater quality conditions will be captured in the study data base.

Sampling Procedures; Sample Preservation, Packaging and Transport

Sampling procedures for each water quality parameter are described below. Other details regarding sample collection and analyses were provided previously in Section 4.9.4.

pH. Samples will be collected headspace free into polyethylene or borosilicate glass bottles, capped tightly and stored refrigerated unless analyzed immediately. Sample agitation and prolonged exposure to air will be avoided. The temperature at which the pH reading is made will be recorded.

Temperature. No special sampling procedures necessary; samples will be analyzed immediately after collection.

Turbidity (Grab). The method for collecting grab turbidity samples will be:

- A slow, steady stream will be run from the sample tap
- A dedicated sample cell will be triple-rinsed with the sample
- The sample will be allowed to flow down the side of the cell to minimize bubble entrainment
- The sample cell will be wiped clean
- The sample cell will be immediately inserted into the turbidimeter
- The measured turbidity will be recorded.

Alkalinity. Samples will be collected headspace free into polyethylene or borosilicate glass bottles provided by the analytical laboratory, capped tightly and stored refrigerated. Sample agitation and prolonged exposure to air will be avoided.

Total Hardness. Samples will be collected headspace free into polyethylene or borosilicate glass bottles provided by the analytical laboratory, capped tightly and stored refrigerated.

Calcium Hardness. See sampling procedure for total hardness.

Nitrate. Samples will be collected headspace free into polyethylene bottles provided by the analytical laboratory, capped tightly and stored refrigerated.

Iron and Manganese. Samples will be collected headspace free into A-polyethylene bottles provided by the analytical laboratory, preserved with HNO_3, capped tightly and stored refrigerated.

Total Dissolved Solids. Resistant glass or plastic bottles sample bottles will be used, as provided by the analytical laboratory. Analysis will begin as soon as possible due to impracticality of preserving samples, as specified in Method 2540. Samples will be refrigerated until the time of analysis.

Total Suspended Solids. See sampling procedure for total dissolved solids.

Total Organic Carbon. All sample bottles will be provided by the analytical laboratory. Sample bottles will be amber glass with TFE-lined caps and will contain preservative (phosphoric or sulfuric acid). Samples will be refrigerated until the time of analysis.

Ultraviolet Light Absorbance at 254 nm. All sample bottles will be provided by the analytical laboratory. Sample bottles will be amber glass. Samples will be refrigerated until the time of analysis.

Total Coliform and HPC. All sample containers will be provided by the analytical laboratory. Aseptic sampling techniques will be used as follows:

- The sample bottles will be kept closed until they are to be filled.
- If the sample tap is made of stainless steel, it will be flamed.
- The sample tap will be opened fully with the water allowed to run to waste for a minimum of 10 seconds.
- The flow will be reduced to permit filling the bottle without splashing.
- The cap of the sample container will be removed without touching the inner surface of the cap or neck of the bottle.
- The sample container will be filled without rinsing and the cap will be replaced immediately.
- The samples will be refrigerated immediately after collection and will be transported to the laboratory in coolers with frozen blue ice.
- Samples will be refrigerated upon receipt at the laboratory and analyzed within holding times specified in the Standard Method.

Representativeness of Operational Parameters

As specified by NSF, representativeness for operational parameters entails collecting a sufficient quantity of data during operation to be able to detect a change in operations. As specified by NSF, detecting a ±10 percent change in an operating parameter is sufficient for proper QA/QC. Operational parameters including flow and UV irradiation will be recorded a minimum of once a day, which NSF specifies as sufficient for tracking changes in operational conditions that exceed this 10 percent range.

5.5.2 Statistical Uncertainty

Statistical uncertainty of the water quality parameters analyzed shall be evaluated through calculation of the 95 percent confidence interval around the sample mean. Description of the confidence interval calculation is provided in Section 3.4.1 – Calculation of Statistical Uncertainty.

5.5.3 Accuracy

Accuracy of water quality and operational parameters was addressed in sections 5.1.1 and 5.1.2.

5.5.4 Precision

Precision of water quality and operational parameters was addressed in sections 5.1.1 and 5.1.2.

5.6 CALCULATION OF DATA QUALITY INDICATORS

5.6.1 Precision

As specified in Standard Methods (Method 1030 C), precision is specified by the standard deviation of the results of replicate analyses. An example of replicate analyses in this ETV is the bi-weekly analysis of turbidity proficiency samples. The overall precision of a study includes the random errors involved in sampling as well as the errors in sample preparation and analysis.

$$\text{Precision} = \text{Standard Deviation} = \left([\sum_{i=1}^{N} (\overline{X}_i - \overline{X})^2 \div (n-1)]\right)^{1/2}$$

where: $\overline{X}$ = sample mean
$\overline{X}_i$ = ith data point in the data set
n = number of data points in the data set

5.6.2 Relative Percent Deviation

For this ETV, duplicate samples will be analyzed to determine the overall precision of an analysis using relative percent deviation. An example of duplicate sampling in this ETV is the daily duplicate analysis of turbidity samples using the bench-top turbidimeter.

$$\text{Relative Percent Deviation} = 100 \times [(x_1 - x_2) \div \overline{X}]$$

where $\overline{X}$ = sample mean
x_1 = first data point of the set of two duplicate data points
x_2 = second data point of the set of two duplicate data points

5.6.3 Accuracy

Accuracy is quantified as the percent recovery of a parameter in a sample to which a known quantity of that parameter was added. An example of an accuracy

determination in this ETV is the analysis of a turbidity proficiency sample and comparison of the measured turbidity to the known level of turbidity in the sample.

$$\text{Accuracy} = \text{Percent Recovery} = 100 \times [(X_{known} - X_{measured}) \div X_{known}]$$

where X_{known} = known concentration of measured parameter
$X_{measured}$ = measured concentration of parameter

5.6.4 Statistical Uncertainty

For the water quality parameters monitored, 95 percent confidence intervals will be calculated. The following equation will be used for confidence interval calculation:

$$\text{Confidence Interval} = \bar{X} \pm [t_{n-1,1-(\alpha/2)} \times (S/\sqrt{n})]$$

where: $\bar{X}$ = sample mean
S = sample standard deviation
n = number of independent measurements included in the data set
t = Student's t distribution value with n-1 degrees of freedom
α = significance level, defined for 95 percent confidence as: 1 – 0.95 = 0.05

According to the 95 percent confidence interval approach, the α term is defined to have the value of 0.05, thus simplifying the equation for the 95 percent confidence interval in the following manner:

$$\text{95 Percent Confidence Interval} = \bar{X} \pm [t_{n-1,0.975} \times (S/\sqrt{n})]$$

TABLE 5-3 DATA REPORTING

All reports will be prepared by Montgomery Watson. Data will be reported in three formats to the EPA, the NSF, Trojan Technologies Inc. and all other project participants listed in Table 1-1.

- Monthly Status Reports
- Audit Reports
- Draft and Final ETV Reports

5.7.1 Monthly Status Reports

Monthly status reports will be submitted to the above participants and interested parties in the form of technical memoranda. These Status Reports will be five to ten pages in length with accompanying tables and plots. The monthly Status Reports will include the following:

1. Project progress

   a. Updated schedule showing level of completion of study tasks
   b. Plots and/or tables of results available to date (see Minimum Reporting Requirements of individual tasks in Testing Plan described in Section 4)
   c. Discussion of plots and/or tables of results available to date
   d. Quality control results produced to date, including:

      i. Calculation of precision for available replicate analyses
      ii. Calculation of completeness of available data
      iii. Results of any performance evaluation samples available to date

2. Problems and associated corrective actions

   a. Schedule
   b. Budget
   c. Staffing
   d. Quality assurance, including any QC parameters measured outside of evaluation criteria

3. Future scheduled activities

   a. Testing Plan tasks to be completed in subsequent reporting period
   b. Meetings or conference calls
   c. Date for submittal of next Status Report

5.7.2 Audit Reports

Any QA inspections will be formally documented in an Audit Report submitted to the project participants.

5.7.3 Draft and Final ETV Reports

The Draft ETV Report will be prepared by Montgomery Watson and submitted for review within 45 days of completion of all pilot study tasks described in the Testing Plan. The Final ETV Report will be submitted by the FTO within 30 days of receipt of reviewer comments. The contents of the ETV Report are described in detail in Section 6.2 of this FOD.

5.8 CORRECTIVE ACTION PLAN

5.8.1 Corrective Action Plan for Water Quality Parameters

The corrective action plan for water quality parameters is summarized in Table 5-3.

TABLE 5-3
CORRECTIVE ACTION PLAN

Parameter	Acceptance Criteria	Sequence of Steps for Corrective Action
Any Duplicate Analysis	≤10% apart	• Re-sample duplicates • Check instrument calibration; re-calibrate instrument
Any Method Blank	See Table 5-2; criteria set by EPA-certified laboratory performing the analysis	• See Table 5-2; perform procedures specific to each analysis as determined by the state-certified, third-party or EPA-accredited laboratory performing the analysis
Any Performance Evaluation (PE) or Proficiency Sample	Within recovery specified for each PE or proficiency sample	• Check and verify all steps in sample collection and analysis • Re-do PE or proficiency sampling and analysis
pH	≤10% difference from previous day	• Check for change in feedwater source or supply • Check instrument calibration • Re-calibrate instrument
Temperature	≤20% difference from previous day	• Check for change in feedwater source or supply
Turbidity (Bench-top)	No increasing or decreasing trend indicated by results of bi-weekly proficiency samples	• Verify turbidimeter operation and status of sample tap • Perform routine maintenance/cleaning of instrument • Verify calibration using secondary standards • Re-calibrate using primary standards
Alkalinity, Total Hardness, Calcium Hardness, Total Dissolved Solids, Nitrate, Iron and Mn	≤20% difference from previous reading	• Verify change in feedwater source or supply
Total Suspended Solids (filtrate)	Assuming very low TSS concentrations, ≤100% difference from previous reading	• Verify corresponding increase in turbidity • Re-sample

TABLE 5-3
CORRECTIVE ACTION PLAN

Parameter	Acceptance Criteria	Sequence of Steps for Corrective Action
Total Organic Carbon	≤20% difference from previous reading	• Verify corresponding increase in UV-254 • Re-sample
UV-254	≤20% difference from previous reading	• Verify corresponding increase in TOC • Re-sample
Total Coliform and HPC	<2/100 mL	• Verify corresponding increase in particle count, turbidity or TSS • Sterilize sample tap and re-sample

SECTION 6
DATA MANAGEMENT, ANALYSIS AND REPORTING

6.1 DATA MANAGEMENT PLAN

The data management system for the UVSwift system study involves the use of computer spreadsheets as well as a protocol for the entry, verification, and presentation of the data in appropriate tabular and graphical formats.

6.1.1 Data Recording

Data will be recorded by the data acquisition system, or plant operators will record data by hand in bound notebooks and on specially-prepared data sheets for operational and water quality parameters measured in the field. Photocopies of these notebook sheets and data sheets will be stored in the project office, away from the notebooks kept at the pilot plant. This will enable not only ease of referencing the original data, but offers protection of the original record of results.

6.1.2 Data Reduction and Entry

The database for the project will be set up in the form of a custom-designed Microsoft Excel database and associated spreadsheets. Data will be entered from the handwritten data sheets into similarly designed database data entry forms. Data entered into these forms will be linked to spreadsheets to facilitate data manipulation and graphing. All data from the Laboratory Notebooks, QC Notebooks and data log sheets will be entered into the appropriate database data entry form. Data entry will be conducted a minimum of every Friday afternoon and the database will be backed up using a tape drive. The file will be automatically backed up following data entry. All recorded calculations (solution dilutions, flow rates, etc.) will also be checked at this time. The database will be locked via a password and access to the database will be limited to the staff member responsible for data entry. In this manner, only the project staff assigned to the data management task will be capable of entering or editing data.

6.1.3 Data Validation

Following data entry, a data spreadsheet will be printed out and the print-out will be checked against the handwritten data sheet by the staff member who entered the data. Any corrections will be noted on the hard copies and corrected on the screen. Every Monday morning at a minimum, the project engineer will access the database and review the integrity and completeness of the data. The project engineer will have access to the database for reviewing data only and will not have access to data editing. Any discrepancies in the data noticed during the review will be documented and submitted to the staff member responsible for data maintenance. The staff member will be responsible for checking the data and correcting the data if necessary.

Each treatment cycle will be assigned a cycle number which will then be tied to the data from that experiment through each step of data entry and analysis. As samples are collected and sent to outside laboratories, the data will be tracked by use of the same system of run numbers. Data from the outside laboratory will be received and reviewed by the project engineer or designated pilot plant operator. These data will be entered as they are received, and then checked, corrected and verified in the same manner as the field data. Presentation of all of the verified data generated by the study will be overseen by the project engineer.

6.1.4 Quality Assurance

All calibration and QC data will be reviewed by the plant operators and the project engineer. The project engineer will verify that all instrument systems are in control (i.e., meet the acceptance criteria specified in Table 5-3) and that QA objectives for accuracy and completeness have been met. If any QC data are outside of the acceptance criteria, the project engineer will investigate the cause of the discrepancy. If the discrepancy is due to an analytical problem, the sample will be re-analyzed or another sample will be collected and analyzed. If there is any other problem, the data will be flagged, another sample will be collected or the steps in the Corrective Action Plan will be implemented. In any event, the data will be flagged with a data qualifier and the qualifier will be included and explained in the final project report.

6.1.5 Types of Data and Information

Data to be included in the database, and which will be subject to the above steps of the data management plan, are summarized in Table 6-1.

TABLE 6-1
DATA AND INFORMATION TO BE INCLUDED IN THE PROJECT DATABASE AND FINAL ETV REPORT

Data Type	Sampling Location or Data Source	Recorded Parameters	Format of Data Reporting
Water Quality	• See Table 4-2 • Data sheets filled in by operator • Data reports from laboratory	• See Table 4-2 • Data flagged if acceptance criteria not met	• Electronic (Excel) database • Hard copy of electronic database • Laboratory Notebooks
Operational	• See Table 4-1 • Data sheets filled in by operator • Field notes • Calculations for operational parameters	• See Table 4-1 • Data flagged if acceptance criteria not met	• Notebook of handwritten data sheets • Electronic (Excel) database • Hard copy of electronic database • Laboratory Notebooks
Quality Control	• Calibration data • Calibration verification data • Results of duplicate sampling • Performance Evaluation sample results and statistics • Data from blank samples	• Water quality data (See Table 4-2) • Operational data (See Table 4-1)	• Laboratory Notebooks • QC Notebooks • Electronic (Excel) QC database • Hard copy of electronic QC database
Informational	• Photographs or slides • Videotapes	• UV system equipment • UV system operation	• Original photographs, slides or videotapes

6.2 DATA REPORTING

Section 5.7.1 included a description of the three types of reports that will be prepared by the FTO and submitted to the project participants. Two of these reports, the Monthly Status Reports and the Audit Reports were discussed in Section 5.7.1.

The ETV Final Report will be prepared by Montgomery Watson, describing the verification testing that was performed and the results of that testing. The report will include the following topics:

- Introduction
- Verification Statement
- Description and Identification of the Equipment Tested
- Procedures and Methods Used in Testing
- Results and Discussion
- References
- Appendices
- QA/QC Results
- Items described in Section 6.1 of this FOD

The Draft ETV Final Report will be prepared by Montgomery Watson and submitted for review within 45 days of completion of all study tasks. The report will be revised to incorporate reviewer comments and the ETV Final Report will be completed and submitted by Montgomery Watson within 30 days of receipt of reviewer comments.

SECTION 7
SAFETY CONSIDERATIONS

This section discusses safety considerations appropriate for the equipment being tested. They key safety considerations for the ETV described in this FOD are:

- Storage, handling and disposal of potentially hazardous chemicals
- Electrical power
- Chlorine
- Microbial seedings
- UV rays

The safety plan for this ETV is based on the experience of the plant operators. The operations staff for all testing under this ETV is highly experienced. Their primary task since 1995 has been the operation of pilot plants. The operations staff is well aware of the safety issues associated with not only working in close proximity to equipment using hazardous chemicals, electrical power and chlorine, they have a wide range of experience in all aspects of pilot plant operation, including working with machinery such as pumps, pressurized water and water treatment chemicals which can be acidic, caustic, oxidizing or toxic.

The testing site, the City of San Diego's Aqua 2000 Research Center, is fully equipped for appropriate handling, storage and disposal of all potentially hazardous chemicals, including acids, caustic chemicals and oxidants. The only oxidant to be used in this ETV is chlorine. Appropriate chlorine safety systems and procedures are already in place at the Aqua 2000 Research Center. Further, all electrical wiring and systems for both the site and the UV system will meet the applicable electrical codes.

As with any experiment involving microbes, care should taken during MS2 seedings to ensure that a high enough dose of chlorine is used to disinfect the seeded effluent. The operator will wear protective gloves and attire to prevent any contact with MS2 virus. All containers/glassware in contact with the organism will be properly sanitized.

UV rays are harmful to eyes and skin. When conducting any repair on the unit (e.g. quartz sleeve replacement), power should not be restored to the system until the lamps and end caps have been properly installed. The Manufacturer's Operation and Maintenance Manual will be carefully followed at all times during pilot operation and during maintenance.

APPENDIX A

LAB ACCREDITATION

CALIFORNIA DEPARTMENT OF HEALTH SERVICES
ENVIRONMENTAL LABORATORY ACCREDITATION PROGRAM
List of Approved Fields of Testing and Analytes

City of San Diego
Water Quality Laboratory
5530 Kiowa Drive
La Mesa, CA

TELEPHONE No: (619) 668-3232
CALIFORNIA COUNTY: San Diego

CERTIFICATE NUMBER: 1058
EXPIRATION DATE: 11/30/97

1 Microbiology of Drinking Water and Wastewater

1.1 Total Coliforms in Drinking Water by Multiple Tube Fermentation
Fecal Coliforms/E. Coli in Drinking Water by Multiple Tube Fermentation
1.2 Total Coliforms in Drinking Water by Membrane Filtration
Fecal Coliforms/E. Coli in Drinking Water by Membrane Filtration
1.3 Total Coliforms and E. Coli in Drinking Water by MMO-MUG
1.6 Total Coliforms in Wastewater by Multiple Tube Fermentation
1.7 Fecal Coliforms in Wastewater by Multiple Tube Fermentation

2 Inorganic Chemistry and Physical Properties of Drinking Water excluding Toxic Chemical Elements

2.2 Calcium
2.3 Chloride
2.4 Corrosivity
2.5 Fluoride
2.6 Hardness
2.7 Magnesium
2.9 Nitrate
2.10 Nitrite
2.11 Sodium
2.12 Sulfate
2.13 Total Filterable Residue and Conductivity
2.16 Phosphate, ortho
2.17 Silica
2.18 Cyanide

3 Analysis of Toxic Chemical Elements in Drinking Water

3.1 Arsenic
3.2 Barium
3.3 Cadmium
3.4 Chromium, total
3.5 Copper
3.6 Iron
3.7 Lead
3.8 Manganese
3.9 Mercury
3.10 Selenium
3.11 Silver
3.12 Zinc
3.13 Aluminum
3.15 Antimony
3.16 Beryllium
3.17 Nickel
3.18 Thallium

4 **Organic Chemistry of Drinking Water (measurement by GC/MS combination)**

4.2 EPA Method 524.2

5 **Organic Chemistry of Drinking Water (excluding measurements by GC/MS combination)**

5.4 EPA Method 502.2
5.6 EPA Method 504.1
5.7 EPA Method 505
5.9 EPA Method 507
5.14 EPA Method 531.1
5.15 EPA Method 547
5.21 EPA Method 552.1

16 **Wastewater Inorganic Chemistry, Nutrients and Demand**

16.2 Akalinity
16.3 Ammonia
16.4 Biochemical Oxygen Demand
16.5 Boron
16.6 Bromide
16.7 Calcium
16.8 Carbonaceous Biochemical Oxygen Demand (cBOD)
16.10 Chloride
16.11 Chlorine Residual, total
16.12 Cyanide
16.14 Fluoride
16.15 Hardness
16.16 Kjeldahl Nitrogen
16.17 Magnesium
16.18 Nitrate
16.19 Nitrite
16.21 Organic Carbon
16.22 Oxygen, Dissolved
16.23 pH
16.25 Phosphate, ortho
16.26 Phosphorous, Total
16.27 Potassium
16.28 Residue, Total
16.29 Residue, Filterable (Total Dissolved Solids)
16.30 Residue, Nonfilterable (Total Suspended Solids)
16.31 Residue, Settleable (Settleable Solids)
16.32 Residue, Volatile
16.33 Silica
16.34 Sodium
16.35 Specific Conductance
16.36 Sulfate
16.41 Turbidity
16.45 Total Organic Halides

17 Toxic Chemical Elements in Wastewater

17.1	Aluminum
17.2	Antimony
17.3	Arsenic
17.4	Barium
17.5	Beryllium
17.6	Cadmium
17.8	Chromium, Total
17.9	Cobalt
17.10	Copper
17.13	Iron
17.14	Lead
17.15	Manganese
17.16	Mercury
17.17	Molybdenum
17.18	Nickel
17.24	Selenium
17.25	Silver
17.27	Thallium
17.30	Vanadium
17.31	Zinc

****
(020797)

CALIFORNIA DEPARTMENT OF HEALTH SERVICES
ENVIRONMENTAL LABORATORY ACCREDITATION PROGRAM
List of Approved Fields of Testing and Analytes

City of San Diego - Marine Micro Lab.
Metro Wastewater/EM&TS Division
5530 Kiowa Drive
La Mesa, CA

TELEPHONE No: (619) 668-3226
CALIFORNIA COUNTY: San Diego

CERTIFICATE NUMBER: 2185
EXPIRATION DATE: 11/30/98

---

1 Microbiology of Drinking Water and Wastewater

1.5 Heterotrophic Plate Count
1.6 Total Coliform in Wastewater by Multiple Tube Fermentation
1.7 Fecal Coliform in Wastewater by Multiple Tube Fermentation
1.8 Total Coliforms in Wastewater by Membrane Filtration
1.9 Fecal Coliform in Wastewater by Membrane Filtration
1.11 Fecal Streptococci or Enterococci by Membrane Filtration

****
(020998)

APPENDIX B

TROJAN FLOWRATE-UVT-LOG INACTIVATION DATA

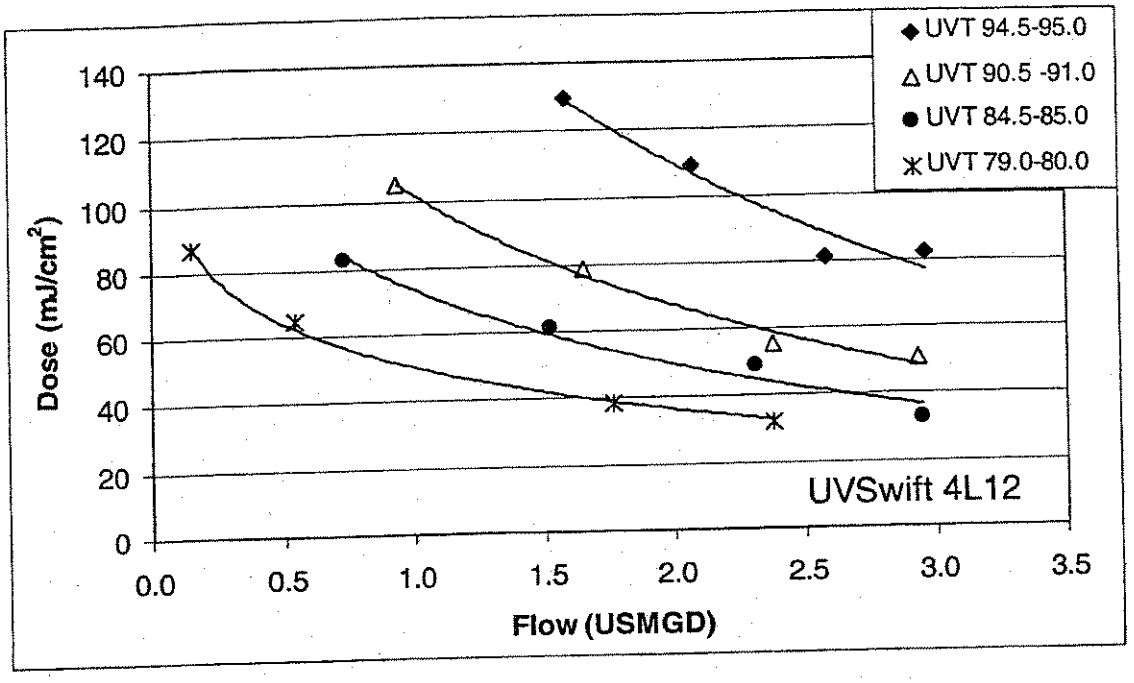

Bioassay-determined delivered dose versus flow (USMGD) for the UVSwift Model 4L12 at various UVTs and 100 % lamp power.

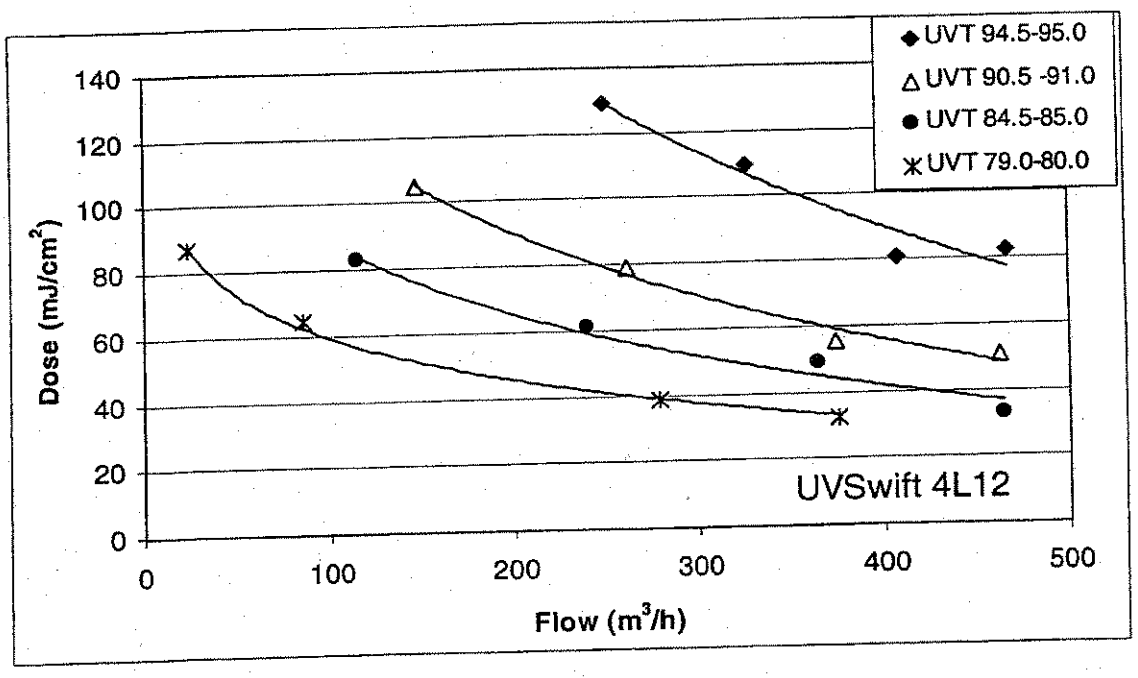

Bioassay-determined delivered dose versus flow (m^3/h) for the UVSwift Model 4L12 at various UVTs and 100 % lamp power.

Table 8 Operating conditions and disinfection results for testing of the UV Swift Model 4L12.

Lamp Power (%)				Flow			UVT	MS2 Log Reductions	Bioassay-Determined Delivered Dose
Top	Dn Stream	Bottom	Up Stream	Usgpm	USMGD	m^3/h	(%)		(mJ/cm^2)
100	100	100	100	103.0	0.148	23.4	79.0	3.31	86.9
100	100	100	100	374.0	0.539	84.8	79.0	2.46	64.6
100	100	100	100	1227.0	1.767	278.3	80.0	1.48	38.8
100	100	100	100	1655.0	2.383	375.4	80.0	1.23	32.2
100	100	100	100	505.5	0.728	114.6	84.5	3.16	82.8
100	100	100	100	1056.5	1.521	239.6	85.5	2.33	61.0
100	100	100	100	1609.0	2.317	364.9	85.0	1.86	48.8
100	100	100	100	2043.5	2.943	463.5	85.0	1.24	32.6
100	100	100	100	648.5	0.934	147.1	90.5	4.00	104.9
100	100	100	100	1150.0	1.656	260.8	90.5	3.00	78.7
100	100	100	100	1652.0	2.379	374.7	91.0	2.10	55.2
100	100	100	100	2034.5	2.930	461.4	90.0	1.93	50.7
100	100	100	100	1101.0	1.585	249.7	95.0	4.93	129.2
100	100	100	100	1439.0	2.072	326.4	95.0	4.17	109.3
100	100	100	100	1794.5	2.584	407.0	94.5	3.08	80.9
100	100	100	100	2055.0	2.959	466.1	95.0	3.13	82.2