SRI/USEPA-GHG-QAP-20
June 2002

# Test and Quality Assurance Plan

## Engineered Concepts, LLC
## Quantum Leap Dehydrator

**Prepared by:**

**Greenhouse Gas Technology Center**
**Southern Research Institute**

Under a Cooperative Agreement With
U.S. Environmental Protection Agency

**EPA REVIEW NOTICE**

This report has been peer and administratively reviewed by the U.S. Environmental Protection Agency, and approved for publication. Mention of trade names or commercial products does not constitute endorsement or recommendation for use.

SRI/USEPA-GHG-QAP-20
June 2002

# Greenhouse Gas Technology Center

*An Environmental Technology Verification ( ETV ) Organization*
Sponsored by the U.S. Environmental Protection Agency's Office of Research and Development

# Test and Quality Assurance Plan
# Engineered Concepts, LLC
# Quantum Leap Dehydrator

Prepared by:
Greenhouse Gas Technology Center
Southern Research Institute
PO Box 13825
Research Triangle Park, NC 27709 USA
Telephone: 919/806-3456

Reviewed by:

| | |
|---|---|
| Engineered Concepts, LLC | ☒ |
| Kerr-McGee Gathering, LLC | ☒ |
| Selected Members of GHG Center Stakeholder Panel | ☒ |
| U.S. EPA Office of Research and Development QA Team | ☒ |

☒ indicates comments are integrated into Plan

# Greenhouse Gas Technology Center

*An Environmental Technology Verification ( ETV ) Organization*
*Sponsored by the U.S. Environmental Protection Agency's Office of Research and Development*

# Test and Quality Assurance Plan
# Engineered Concepts, LLC
# Quantum Leap Dehydrator

This Test and Quality Assurance Plan has been reviewed and approved by the Greenhouse Gas Technology Center Project Manager and Center Director, the U.S. EPA APPCD Project Officer, and the U.S. EPA APPCD Quality Assurance Manager.

| | | | |
|---|---|---|---|
| Stephen Piccot<br>Director<br>Greenhouse Gas Technology Center<br>Southern Research Institute | Date | David Kirchgessner<br>APPCD Project Officer<br>U.S. EPA | Date |
| Sushma Masemore<br>Project Manager<br>Greenhouse Gas Technology Center<br>Southern Research Institute | Date | Shirley Wasson<br>APPCD Quality Assurance Manager<br>U.S. EPA | Date |

Test Plan Final: June 2002

## TABLE OF CONTENTS

**Page**


**1.0 INTRODUCTION ..... 1-1**
1.1 BACKGROUND ..... 1-1
1.2 CONVENTIONAL NATURAL GAS DEHYDRATION ..... 1-3
1.3 QLD TECHNOLOGY DESCRIPTION ..... 1-5
1.4 TEST FACILITY DESCRIPTION ..... 1-8
1.5 PERFORMANCE VERIFICATION PARAMETERS ..... 1-9
1.6 ORGANIZATION ..... 1-12
1.7 SCHEDULE ..... 1-14

**2.0 VERIFICATION APPROACH ..... 2-1**
2.1 OVERVIEW ..... 2-1
2.2 SALES GAS QUALITY AND PRODUCTION RATE ..... 2-3
2.2.1 Sales Gas Moisture Analysis ..... 2-3
2.2.2 Sales Gas Flow Rate ..... 2-3
2.3 PROCESS GLYCOL CIRCULATION RATE ..... 2-4
2.4 MAKEUP GAS FUEL FLOW RATE ..... 2-5
2.5 REBOILER STACK EMISSION RATES ..... 2-5
2.5.1 Gaseous Sample Conditioning and Handling ..... 2-7
2.5.2 Gaseous Pollutant Sampling Procedures ..... 2-8
2.5.3 Determination of Emission Rates ..... 2-9
2.6 HAP DESTRUCTION EFFICIENCY ..... 2-10
2.6.1 HAPs in Glycol Streams ..... 2-12
2.6.1.1 Glycol Sampling ..... 2-14
2.6.1.2 Glycol Sample Analyses ..... 2-14
2.6.2 HAPs in Wastewater and Condensate Product Streams ..... 2-15
2.6.2.1 Liquid Sampling ..... 2-17
2.6.2.2 Liquid Analysis ..... 2-17
2.6.3 BTEX in Makeup Natural Gas Stream ..... 2-18
2.6.3.1 Gas Sampling ..... 2-18
2.6.3.2 Gas Analysis ..... 2-18

**3.0 DATA QUALITY ..... 3-1**
3.1 BACKGROUND ..... 3-1
3.2 SALES GAS FLOW AND MOISTURE CONTENT ..... 3-2
3.3 GLYCOL CIRCULATION RATE ..... 3-2
3.4 MAKEUP NATURAL GAS ..... 3-7
3.5 REBOILER STACK EMISSION RATES ..... 3-7
3.6 HAP DESTRUCTION EFFICIENCY ..... 3-11
3.6.1 Concentration Measurements in Liquid Samples ..... 3-14
3.7 INSTRUMENT TESTING, INSPECTION, AND MAINTENANCE REQUIREMENTS ..... 3-15
3.8 INSPECTION/ACCEPTANCE OF SUPPLIES AND CONSUMABLES ..... 3-15

**4.0 DATA ACQUISITION, VALIDATION, AND REPORTING ..... 4-1**
4.1 DATA ACQUISITION AND STORAGE ..... 4-1
4.1.1 Continuous Measurements Data Acquisition ..... 4-1
4.1.2 Reboiler Emissions Testing Data ..... 4-1
4.1.3 Wastewater and Condensate Flow Data ..... 4-2


(continued)

(continued)

**Page**


4.1.4 Liquid Sample Analysis Data ..... 4-2
4.1.5 Makeup Gas Analysis Data ..... 4-3
4.2 DATA REVIEW, VALIDATION, AND VERIFICATION ..... 4-3
4.3 RECONCILIATION OF DATA QUALITY OBJECTIVES ..... 4-4
4.4 ASSESSMENTS AND RESPONSE ACTIONS ..... 4-4
4.4.1 Project reviews ..... 4-4
4.4.2 Inspections ..... 4-5
4.4.3 Audit of Data Quality ..... 4-5
4.5 DOCUMENTATION AND REPORTS ..... 4-5
4.5.1 Field Test Documentation ..... 4-5
4.5.2 QC Documentation ..... 4-6
4.5.3 Corrective Action and Assessment Reports ..... 4-6
4.5.4 Verification Report and Verification Statement ..... 4-6
4.6 TRAINING AND QUALIFICATIONS ..... 4-7
4.7 HEALTH AND SAFETY REQUIREMENTS ..... 4-7

**5.0 REFERENCES ..... 5-1**

## APPENDICES


| | | Page |
|---|---|---|
| APPENDIX A | Test Procedures and Field Log Forms | A-1 |
| APPENDIX B | Quality Assurance/Quality Control Checks and Log Forms | B-1 |
| APPENDIX C | Additional Information | C-1 |


## LIST OF FIGURES


| | | Page |
|---|---|---|
| Figure 1-1 | Schematic of a Conventional Natural Gas Dehydration Process | 1-3 |
| Figure 1-2 | Schematic of QLD Natural Gas Dehydration Technology | 1-6 |
| Figure 1-3 | Project Organization | 1-12 |
| Figure 2-1 | Schematic of Measurement System | 2-1 |
| Figure 2-2 | Gas Sampling and Analysis System | 2-8 |


## LIST OF TABLES


| | | Page |
|---|---|---|
| Table 1-1 | List of Hazardous Air Pollutants for Subpart HH | 1-4 |
| Table 1-2 | Test Site Design and Operating Conditions | 1-9 |
| Table 2-1 | Verification Test Matrix | 2-2 |
| Table 2-2 | Summary of Emission Testing Methods | 2-6 |
| Table 3-1 | Data Quality Objectives | 3-1 |
| Table 3-2 | Measurement Instrument Specifications and DQI Goals | 3-4 |
| Table 3-3 | Instrument Specifications and DQI Goals for Stack Emissions Testing | 3-6 |
| Table 3-4 | Summary of Calibrations and QC Checks | 3-8 |
| Table 3-5 | Destruction Efficiency Error Determination | 3-12 |

## DISTRIBUTION LIST

**Engineered Concepts, LLC**
Rodney Heath

**Kerr-McGee Gathering, LLC**
Paul Morehead
Robert Smith

**U.S. EPA – Office of Research and Development**
David Kirchgessner
Shirley Wasson

**Southern Research Institute**
Stephen Piccot
Sushma Masemore
William Chatterton
Robert Richards
Ashley Williamson

# 1.0 INTRODUCTION

## 1.1 BACKGROUND

The U.S. Environmental Protection Agency's Office of Research and Development (EPA-ORD) operates the Environmental Technology Verification (ETV) program to facilitate the deployment of innovative technologies through performance verification and information dissemination. The goal of the ETV program is to further environmental protection by substantially accelerating the acceptance and use of improved and innovative environmental technologies. ETV is funded by Congress in response to the belief that there are many viable environmental technologies that are not being used for the lack of credible third-party performance data. With performance data developed under this program, technology buyers, financiers, and permitters in the United States and abroad will be better equipped to make informed decisions regarding environmental technology purchase and use.

The Greenhouse Gas Technology Center (GHG Center) is one of six verification organizations operating under ETV. The GHG Center is managed by EPA's partner verification organization, Southern Research Institute (SRI), which conducts verification testing of promising GHG mitigation and monitoring technologies. The GHG Center's verification process consists of developing verification protocols, conducting field tests, collecting and interpreting field and other data, obtaining independent peer-review input, and reporting findings. Performance evaluations are conducted according to externally reviewed verification Test and Quality Assurance Plans (Test Plans) and established protocols for quality assurance.

The GHG Center is guided by volunteer groups of stakeholders who offer advice on specific technologies most appropriate for testing, help disseminate results, and review Test Plans and Verification Reports. The GHG Center's Executive Stakeholder Group consists of national and international experts in the areas of climate science and environmental policy, technology, and regulation. It also includes industry trade organizations, environmental technology finance groups, governmental organizations, and other interested groups. The GHG Center's activities are also guided by industry specific stakeholders who provide guidance on the verification testing strategy related to their area of expertise and peer-review key documents prepared by the GHG Center.

The GHG Center's Oil and Gas Stakeholder Group have voiced support for the GHG Center's mission, and have identified a need for independent third-party verification of technologies that can effectively reduce methane ($CH_4$) and carbon dioxide ($CO_2$) emissions. Verifications have been conducted for technologies applicable to the oil and natural gas production, transmission, and distribution sectors. This report documents the testing plans for a new natural gas dehydration technology that reduces emissions of GHGs, Hazardous Air Pollutants (HAPs), and volatile organic compounds (VOCs).

It is estimated that about 252,000 natural gas production wells are currently operating in the United States. Gas produced from these wells often contains excess water, which must be removed to prevent corrosion and hydrate formation in pipelines. The most widely used natural gas dehydration process is the glycol dehydration process, in which Triethylene glycol (TEG) absorbs water by directly contacting natural gas. As TEG absorbs water, it also absorbs $CH_4$ and other VOCs, and HAPs present in the natural gas. These pollutants are often vented to the atmosphere, making glycol dehydrators a significant source of $CH_4$ and HAP emissions.

EPA estimates that more than 38,000 glycol dehydration units are operating in the U.S., collectively emitting about 18.6 billion cubic feet of $CH_4$ per year into the atmosphere (EPA 1996a). Within the gas production sector, glycol dehydration of natural gas is the third largest source of total $CH_4$ emissions accounting for 17 percent of total GHGs (EPA 1996b). HAP and VOC emissions from glycol dehydrators represent 85 and 81 percent of annual emissions from natural gas production, respectively (EPA 1997, GTI 1994). On June 17, 1999, the EPA promulgated final maximum achievable control technology (MACT) standards, which require owners or operators of glycol dehydration units to reduce HAP emissions by 95 percent (40 CFR Part 63).

In response to the Oil and Natural Gas Production MACT rule, affected facilities must install control devices to recover and/or destroy pollutants in the dehydration vent stream. Engineered Concepts, LLC (ECL), located in Farmington, NM, has developed a new gas dehydration system designed meet this goal. In the process of reducing HAP emissions, the technology also reduces $CH_4$ emissions, a potent GHG. The technology, referred to as the Quantum Leap Dehydrator (QLD), is an integrated system which collects hydrocarbon vapors present in the dehydrator vent, condenses the hydrocarbons to form a condensate product for sale and water for disposal, and uses excess hydrocarbon vapors as fuel for the system. ECL has requested the GHG Center perform an independent verification of the QLD at a natural gas gathering station operated by Kerr-McGee Gathering, LLC.

This document is the Test and Quality Assurance Plan (Test Plan) for verifying the QLD performance. It contains the rationale for the selection of verification parameters, verification approach, data quality objectives (DQOs), and Quality Assurance/Quality Control (QA/QC) procedures. The Test Plan will guide implementation of the test, creation of test documentation, data analysis, and interpretation.

This Test Plan has been reviewed by ECL, Kerr-McGee, selected members of the GHG Center's Oil and Gas Stakeholder Group, and the EPA-APPCD QA team. Once approved, as evidenced by the signature sheet at the front of this document, it will meet the requirements of the GHG Center's Quality Management Plan (QMP) and thereby will satisfy the ETV QMP requirements. The final Test Plan will be posted on the Web sites maintained by the GHG Center (www.sri-rtp.com) and ETV program (www.epa.gov/etv).

Upon field test completion, the GHG Center will prepare a Verification Report and Statement, which will be reviewed by the same organizations listed above, followed by EPA-ORD management review. When this review is complete, the GHG Center Director and EPA-ORD Laboratory Director will sign the Statement, and the final Verification Report and Statement will be posted on the GHG Center and ETV program Web sites. ECL will also be provided with written guidelines for the use of the ETV logo and use of the verification results to market the QLD to potential customers.

The remaining discussion in this section describes the QLD technology. This is followed by a list of performance verification parameters that will be quantified through testing, and a description of the Kerr-McGee test site. The section concludes with a discussion of key organizations participating in the verification, their roles, and a schedule of activities. Section 2.0 describes the technical approach for verifying each parameter, which includes sampling, analytical, and QA/QC procedures. Section 3.0 identifies data quality assessment criteria for critical measurements and states the accuracy, precision, and completeness goals for each measurement. Section 4.0 discusses data acquisition, validation, reporting, and auditing procedures.

## 1.2 CONVENTIONAL NATURAL GAS DEHYDRATION

Figure 1-1 illustrates a conventional gas dehydration system. Wet natural gas enters a two-phase separator where liquid hydrocarbons are separated from the gas stream. The liquid products are routed to a condensate storage tank for sale, and the wet gas is routed to an absorber. In the absorber, the water content of natural gas is reduced by contacting the gas with glycol. Dry natural gas that meets pipeline specifications (i.e.,7 lb $H_2O$/MMcf) is transmitted to pipelines for sale.

**Figure 1-1. Schematic of a Conventional Natural Gas Dehydration Process**

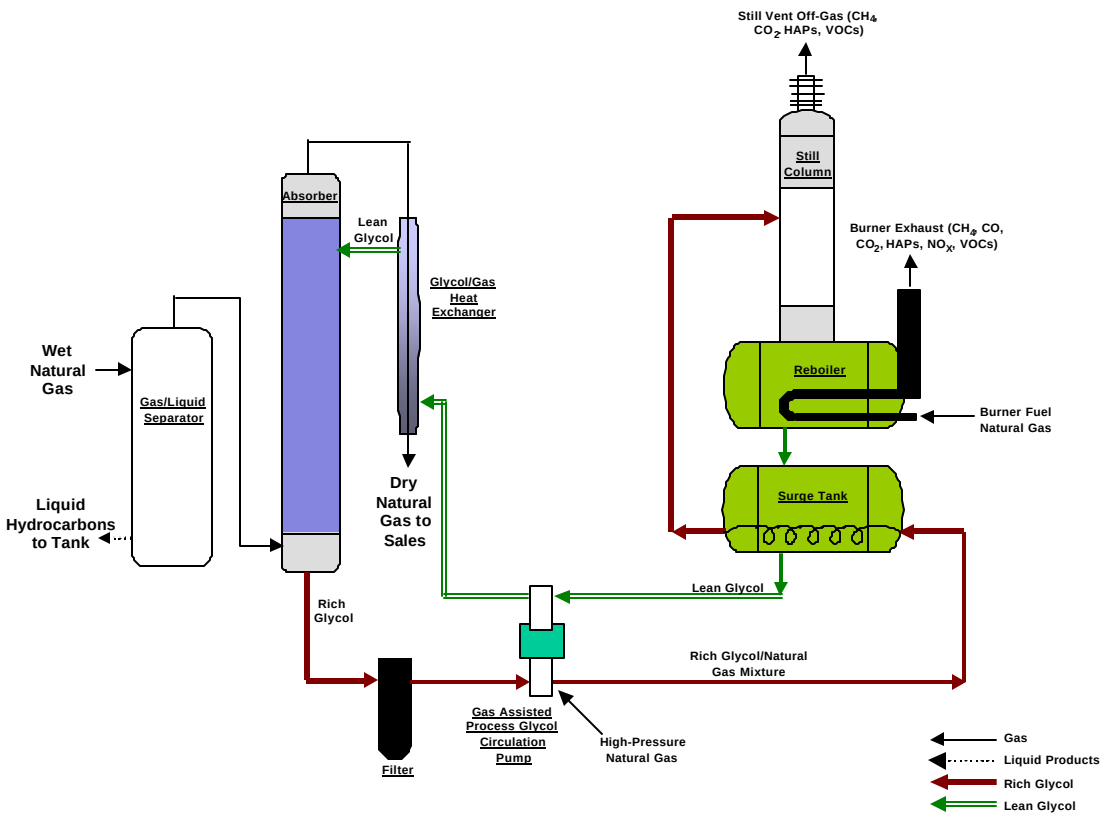


In the countercurrently operated absorber, wet gas comes into contact with lean (dry) glycol. The absorber consists of trays or packing material designed to enhance physical contact between the two streams. The dry gas exits the top of the absorber, and is transmitted to a sales line. The rich (wet) glycol exiting the absorber contains water, along with hydrocarbons (e.g., $CH_4$) and HAPs. The primary HAPs include benzene, ethylbenzene, toluene, and xylene, collectively referred to as BTEX, and n-Hexane. Other HAPs present in trace quantities are listed in Table 1-1. The rich glycol is routed to a regeneration process where the absorbed constituents are removed, resulting in a lean glycol mixture that is suitable for reuse in the absorber.

| Table 1-1. List of Hazardous Air Pollutants for Subpart HH | |
|---|---|
| **Chemical Name** | **Notes** |
| Benzene | • Collectively referred to as BTEX<br>• Estimated to represent about 99 percent of HAP emissions from glycol dehydrator vents<br>• Defined as the "primary HAP" in 40 CFR Part 63 |
| Toluene | |
| Ethyl benzene | |
| Xylenes (isomers and mixture) | |
| o-Xylene | |
| m-Xylene | |
| p-Xylene | |
| n-Hexane | • Estimated to represent about 1 percent of emissions from glycol dehydrator vents<br>• Defined as the "primary HAP" in 40 CFR Part 63 |
| Acetaldehyde | • Present in trace amounts |
| Carbon disulfide | |
| Carbonyl sulfide | |
| 2,2,4-Trimethylpentane | |
| Ethylene glycol | |
| Formaldehyde | |
| Naphthalene | |

The regeneration process consists of a glycol circulation pump, a reboiler still, and heat exchangers (Figure 1-1). The circulation pump provides the motive force needed to move the glycol through the system. Two different types of circulation pumps, gas-assisted and electric, are used. Gas-assisted pumps, also referred to as energy exchange pumps, are the most common circulation pumps used in the industry. They are designed to entrain rich glycol feeding into the pump using energy from externally supplied high-pressure natural gas. The resulting pressurized gas/glycol mixture serves as a source of energy to drive the circulation process. The mixture is passed through a surge tank containing a glycol/glycol heat exchanger, where it is pre-heated prior to entering the reboiler still column. In the still, water is distilled and stripped from the glycol, and the overhead vapors are often vented directly to the atmosphere. The still vent gas stream contains water vapor (90 percent), trace $CO_2$, and pollutants stripped from the rich glycol (HAPs, $CH_4$, VOCs) and the natural gas (primarily $CH_4$ and trace BTEX). Compared to gas-assisted pumps, electric pumps eliminate $CH_4$ emissions from the supply natural gas because electricity is used for motive power instead of high-pressure natural gas.

The lean glycol exiting the reboiler enters a surge tank, where it exchanges energy in the glycol/glycol heat exchanger, and is further cooled. From there, it is pumped back to the absorber area by the circulation pump. The lean glycol is cooled further in the glycol/gas heat exchanger before entering the absorber. This heat exchanger controls the lean glycol temperature to prevent hydrocarbons from condensing in the absorber (GTI 2002).

Although often released directly to the atmosphere, the two most common methods of controlling still vent emissions are condensation and combustion. Combustion devices typically include flares and incinerators. Condensers include water knockout systems and other separation systems that produce condensate products for sale. Non-condensable gases are vented to the atmosphere, or burned in a flare, incinerator, or the reboiler. As an additional measure of controlling emissions, some sites use flash tank separators to collect lighter hydrocarbons (e.g., $CH_4$) prior to the rich glycol stream entering a still column.

### 1.3 QLD TECHNOLOGY DESCRIPTION

The QLD is a re-design of the conventional glycol regeneration process. It uses principles of liquid condensation, phase separation, and hydrocarbon combustion in an integrated system that reportedly produces a saleable product, wastewater that does not require significant cleaning, and very little air pollution. As shown in Figure 1-2, the following key modifications (as compared to conventional dehydrators) have been integrated into the QLD:

- Replacement of gas-assisted pump with electric pump (reduces $CH_4$ losses and emissions)
- Recovery and use of still vent emissions (eliminates direct release of $CH_4$ and pollutants)
- Reboiler re-design (reduces natural gas fuel input and emissions)

Compared to conventional gas dehydration systems, the QLD technology may offer significantly lower emissions of GHGs and HAPs, because the glycol still vent stream is diverted, eliminating the direct release and/or flaring of still vent emissions. The diverted emissions are either combusted as a primary fuel for the reboiler burner, or condensed and recovered as hydrocarbon liquids. These process changes may represent significant benefits of the QLD technology. For example, preliminary estimates for the test site indicate that the diverted emissions will supply approximately 388 standard cubic feet per hour (scfh) of fuel gas at 1410 British thermal unit per standard cubic feet (Btu/scf) to the reboiler burner. This fuel source, which would otherwise be emitted or flared with conventional dehydrators, will account for about 70 percent of the reboiler's heat input requirement. In addition to the potential fuel savings, approximately 35.4 pounds per hour (lb/hr) of condensed hydrocarbon liquids are expected to be recovered from the diverted emissions, of which about 72 percent will be BTEX liquids. In addition to the environmental benefit of prevented emissions, these recovered liquids have economic value and may constitute a significant revenue source for the host site.

**Figure 1-2. Schematic of QLD Natural Gas Dehydration Technology**

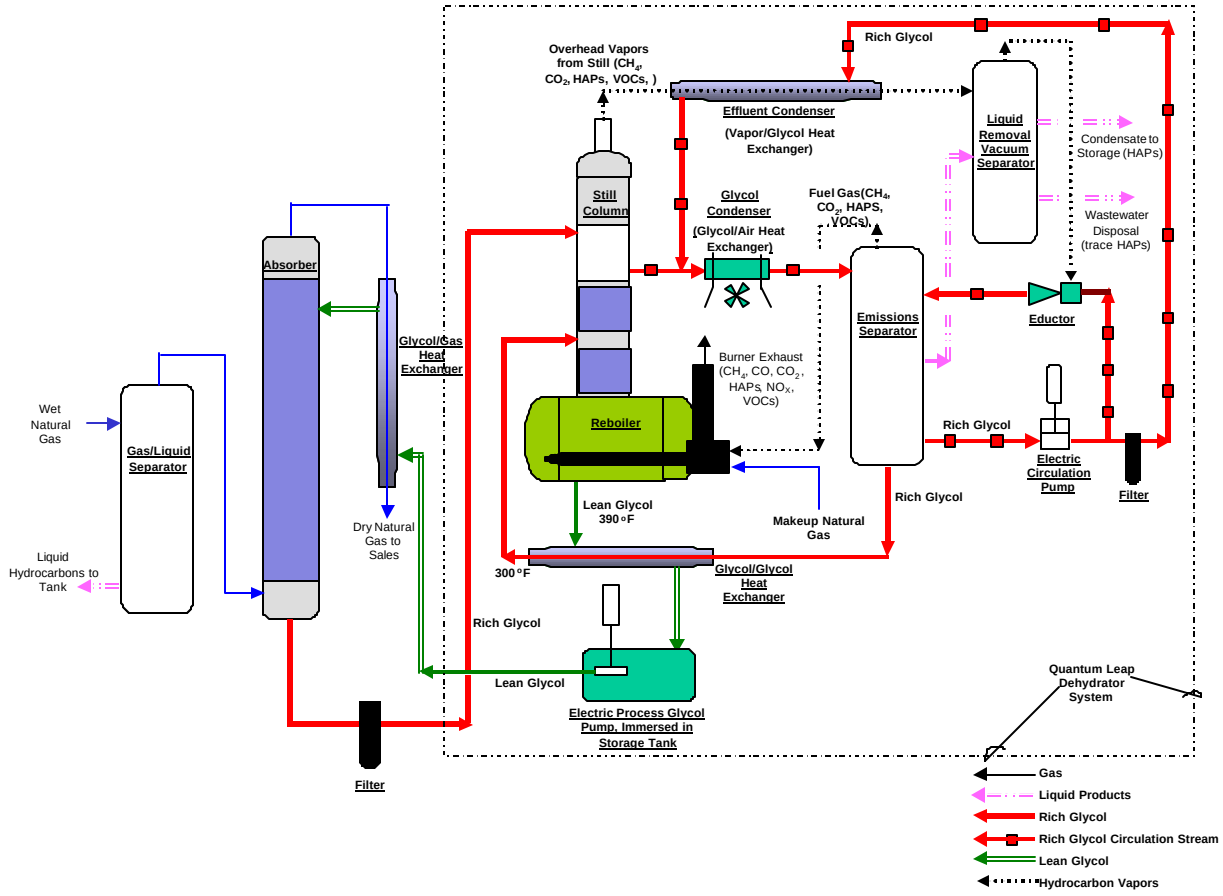


The QLD requires on-site electricity to power the circulation pump. The replacement of a gas-assisted pump with an electric pump is intended to save a significant amount of high-pressure natural gas, and eliminate $CH_4$ and BTEX emissions resulting from use of natural gas as the energy source for the pump. Gas Technology Institute (GTI) estimates that additional pump gas accounts for as much as 3 scf natural gas per gallon (scf/gal) of glycol circulated. For the host site, over 20 thousand standard cubic feet per day (Mscfd) natural gas would be saved (depending on the absorber pressure). According to EPA Natural Gas STAR estimates, switching to an electric pump at a 10 million cubic feet per day (MMcfd) dehydration facility would yield natural gas savings of approximately 10 Mcfd/day. This is equivalent to annual savings of about $7,400 (based on a gas price of $2.00 per Mcf). In addition to these gas savings, $CH_4$ and BTEX, normally present in natural gas and ultimately dissolved with rich glycol when a gas-assisted pump is used, will not be vented from the still column. Natural gas typically contains 80 to 96 percent $CH_4$ and 160 to 300 parts per million volume (ppmv) BTEX (EPA 1997).

At sites where electricity is not available, such as remote wellhead applications, the QLD is supplied with a 7.5 horsepower (Hp) internal combustion engine-generator set which powers the circulation pump. The engine-generator set is designed for 40,000 hours continuous service and uses natural gas for fuel. Emissions of criteria pollutant and GHGs will result from the engine stack. Appendix C contains emissions test data, provided by ECL, for a wellhead operation that used such a genset system. These

data are provided for reference, but the system to be verified at the host site will not contain such an engine.

The primary design modification in the QLD is a control system that recovers and uses still vent vapors. As shown in Figure 1-2, hydrocarbons and HAPs emitted via the still column are collected under vacuum and condensed. About 72 gpm of rich glycol functions as a circulating fluid throughout the condensation system, in addition to the 5 gpm glycol circulated throughout the absorption/regeneration process. The entire condensation system comprises a glycol condenser/cooler, an emissions separator, an effluent condenser, and a vacuum separator.

The components' functions are briefly described below:

- Glycol Condenser A forced-draft, air-cooled cooler is used to cool the rich glycol stream exiting the still column reflux coil and the overhead condenser. The cooler consists of a bank of tubes containing the rich glycol and a fan to force air across the tube bank. Ambient air, used as the cooling media, reduces the glycol temperature from about 150 to 110 °F. The condensed liquids, rich glycol, and noncondensable gas are sent to an Emissions Separator.

- Emissions Separator The Emissions Separator operates in three phases for the classification and removal of rich glycol, gaseous hydrocarbons, and liquid hydrocarbons. One stream of rich glycol is removed from the bottom of the separator and split into two streams. With the use of an electric pump, one stream, (10 to 12 gpm) of the split stream is circulated throughout the condensation system where the cooled rich glycol (100 to 120 °F) is used to cool the overhead vapors from the still. The second stream of the split stream (62 gpm) is circulated through an eductor to create a slight vacuum on the still column and to compress to 15 psig the noncondensable vapors exiting the still column. A second stream of rich glycol (substantially equal to the volume of dry glycol being pumped into the absorber) is removed from the bottom and sent to the glycol to glycol heat exchanger where it exchanges heat with the hot dry glycol exiting the reboiler. The resulting hot, rich glycol is routed back to the reboiler still. Water and other entrained or absorbed gases or liquids are substantially removed from the rich glycol as it flows downward in the still column and into the reboiler where additional heat is supplied before it exits as dry glycol to the glycol to glycol heat exchanger. The second phase (liquid hydrocarbons) are brought to a vacuum separator where the liquid condensates are recovered as a saleable product. The third phase (uncondensed gaseous hydrocarbons) exit at 15 psig through te top portion of the Emissions Separator and serve as fuel gas for the reboiler burner.

- Effluent Condenser This fin-and-tube heat exchanger serves as a condenser to reduce the temperature of the overhead effluent vapor stream exiting the still column. Water vapor contained in the effluent stream is condensed to liquid water, and hydrocarbon vapors are condensed to liquid hydrocarbons, but some uncondensed hydrocarbon vapors remain. The condenser uses the rich glycol, circulated from the Emissions Separator, as the coolant media. The condensed effluent stream is brought into a Vacuum Separator, where the three constituents are separated.

- Vacuum Separator This three-phase separator has a sealed baffle, which divides it into two chambers. Liquid hydrocarbons and liquid water are removed from the chambers, and transported to storage tanks for sale and/or disposal. Gaseous hydrocarbons and any uncondensed water vapor are removed at slight negative pressure via an eductor system. The eductor uses the motive force from the re-circulating rich glycol stream to create the negative pressure and to compress the uncondensed vapors into the Emissions Separator.

The QLD technology also includes a redesign of the conventional U-shaped firetube reboiler, which can be fired with gaseous hydrocarbons recovered from the Emissions Separator, or in conjunction with a supplemental fuel source (20 to 30 percent natural gas). Many commercial burners include a gas flow orifice, air/fuel mixer, and burner nozzle, but do not contain an air injection system. Such a system can optimize mixing and air intake when water and hydrocarbon vapors are present in significant quantities, and as changes in fuel pressure occur. The QLD burner includes air injectors, and therefore may operate effectively with changes in pressure and water vapor. The burner operates continuously and throttles the heat output in response to demand, in contrast with many conventional dehydrators, which cycle burners off and on to meet changing demand.

There will be air emissions from the QLD technology; however, emissions are expected to be less than conventional systems. Liquid and solid waste streams will also be created. A brief description of each emission stream is provided below.

Sources of air emissions include reboiler burner exhaust, release of HAPs dissolved in the wastewater collected and stored, and fugitive emissions. The QLD uses hydrocarbon vapors as a predominant fuel source, and its combustion efficiency is unknown; so VOC and HAP emissions will occur. There will also be nitrogen oxides ($NO_X$), carbon monoxide (CO), $CO_2$ and unburned $CH_4$ emissions. The wastewater stream is expected to contain small quantities of dissolved HAPs which could be emitted to the atmosphere through evaporation. The design of the vacuum separator is such that the effluent water will be relatively stable, and HAP emissions through flash losses should not occur.

Similar to a conventional dehydration system, filtration is used to remove suspended and dissolved contaminants and to maintain glycol solution quality. The QLD uses sock filters to remove suspended particulate matter and carbon filters to remove heavy hydrocarbons and surfactants from the glycol. The sock filters may require disposal, and the carbon filters may be sent to a regenerator (GTI 2002). Since the function of these filters is identical to conventional dehydration system, additional solid waste products are not expected with the QLD technology.

The QLD technology produces wastewater. The wastewater may be handled in a variety of ways, depending on whether the unit is RCRA exempt and the status of state or local regulations (GTI 2002).

### 1.4 TEST FACILITY DESCRIPTION

The Kerr-McGee test site is a natural gas gathering facility located in Brighton, Colorado. Approximately 26 MMcfd natural gas is produced from the dehydration process. The current dehydrator configuration is similar to the conventional system shown in Figure 1-1. After June 2002, the local environmental regulatory authority is requiring the site implement a control system which reduces still vent emissions. Kerr-McGee has selected to implement the QLD technology after excess moisture content in the still vent resulted in persistent problems with thermal oxidizers (i.e., enclosed flares).

With the QLD technology that will be employed (Figure 1-2), on-site electricity is supplied by the utility grid, and therefore, an engine-generator set will not be required to power the circulation pumps. Wastewater is collected in large vessels, which are covered and operated at atmospheric pressure. Wastewater from other processes is also collected in these vessels. Once full, the wastewater is pumped into a tank truck and transported to a disposal facility. Condensates, recovered by the QLD, will be stored in fixed roof tanks, and later sold as a saleable product. Uncondensed hydrocarbon vapors will be burned in the reboiler burner. Some makeup natural gas (20 to 30 percent or 100 to 166 scfh) will be required to operate the reboiler burner. Table 1-2 summarizes key design and operating parameters of the test site, and this design will be the basis on which the performance verification strategy is planned.

| Table 1-2. Test Site Design and Operating Conditions | |
|---|---|
| Natural gas production rate | 26 MMscfd |
| Sales gas moisture content | < 7 lb water / MMscf natural gas |
| Circulation rates for electric pumps<br>Process glycol for absorption and regeneration<br>Glycol for condensation and eductor power | <br>5 gpm, 5 Hp motor<br>72 gpm, 5 Hp motor |
| Glycol/Glycol Heat Exchanger<br>Duty<br>Shell operating conditions (lean glycol)<br>Tube operating conditions (rich glycol) | <br>325 MMBtu<br>atmospheric pressure @ 400 $^{o}$F<br>30 psig @ 300 $^{o}$F |
| Reboiler Still<br>Duty<br>Operating Conditions | <br>600 MMBtu/hr<br>0 to 2 in. water column (vacuum) |
| Reboiler Burner<br>Total heat input required<br>Fuel gas from the emissions separator<br><br>Makeup natural gas<br><br>Stack dimensions | <br>700 to 800 MMBtu/hr<br>233 to 388 scfh (70 to 80 % volume),<br>specific gravity = ~0.75, LHV = ~1410 Btu/ft$^3$<br>100 to 166 scfh (20 to 30 % volume),<br>specific gravity = ~0.65, LHV = ~950 Btu/ft$^3$<br>10-in. diameter, 20-ft high |
| Glycol Condenser - Glycol/Air Heat Exchanger<br>Duty<br>Rich glycol operating conditions | <br>225 Mbtu/hr<br>30 psig @ 150 $^{o}$F |
| Emissions Separator<br>Dimensions<br>Operating Pressure | <br>30-in. diameter, 6'-6" high<br>15 psig |
| Vacuum Separator<br>Dimensions<br>Operating Pressure<br>Water discharge rate<br>Condensate discharge rate | <br>20 in. diameter, 5'-6" high<br>0 to 5 in. w.c. vacuum<br>Every 1.5-in. change in liquid level ~ 1.89 gal/discharge event<br>Every 1.5-in. change in liquid level ~ 1.89 gal/discharge event |
| Effluent Condenser - Vapor/Glycol Heat Exchanger<br>Duty<br>Tube operating conditions (still vapors)<br>Shell operating conditions (rich glycol) | <br>100 MMBtu/hr<br>0 to 5 in. w.c. vacuum @ 212 $^{o}$F<br>30 psig @ 110 $^{o}$F |

### 1.5 PERFORMANCE VERIFICATION PARAMETERS

Regulatory and industry stakeholders in the oil and gas industry have a great interest in obtaining independently verified field data on the technical, emissions, and operational performance of new technologies. The verification approach has been developed to provide credible performance data to potential industry users and environmental regulators, and comprises the following parameters:

**Operational Performance**

Operational performance parameters include sales gas quality and production rate, process glycol circulation rate, and makeup gas flow rate. The sales gas throughput at the test site is 26 MMscfd. The dehydration process must ensure that the moisture content of the sales gas is less than 7 lb/MMscf. To determine the QLD is capable of maintaining this gas capacity and moisture requirements, the GHG

Center will continuously monitor sales gas flow rate and moisture content. Process glycol circulation rate is another key indicator of QLD performance because it affects the performance of the moisture removal process, and the efficiency of the entire glycol regeneration process. This rate will be continuously monitored using a flow meter installed in the lean glycol line. The third operational parameter to be monitored is the rate of natural gas fuel input to the reboiler. For conventional dehydration systems, the reboilers are fired with 100 percent natural gas. The QLD process requires less than 30 percent natural gas, while the remaining fuel will be supplied by the recovered hydrocarbon vapors. Actual makeup gas rate will provide useful information to the users of this technology such that they can estimate fuel savings attributable to the QLD process.

To ensure representative data are collected, operational monitoring will occur after QLD start-up and shakedown activities are completed, and ECL announces the system is functioning normally. The GHG Center will screen the system for potential fugitive leaks. Any leaks found will be repaired by ECL, and testing will be initiated after this is completed. All operational parameters will be continuously monitored in 1-minute time intervals for a period of 7 days. The daily average values will be computed for each day, and an overall average value will be used to report the results. A data completeness goal of 90 percent is specified to ensure that daily average values are computed based on representative number of dataset. This requires the system to be operating continuously for at least 21.6 hrs/day and valid data is collected during this time period. The following discussion summarizes the verification approach for each operational parameter.

- Sales Gas Quality and Production Rate: The sales gas moisture content and flow rate will be determined using instruments supplied and operated by the host site. These parameters will indicate whether the QLD is capable of meeting the site's moisture requirements at expected production rates (< 7 lb $H_2O$/MMscf gas). Moisture content will be measured using an on-site electrolytic moisture detector, and flow rates will be measured using an in-line orifice meter. The data will be stored as 1-minute average readings. Daily average moisture content will be reported as the arithmatic average of 1-minute moisture data for each day. Daily gas production rate for each of the 7 monitoring days will be reported as the sum of 1-minute averages for each day.

- Process Glycol Circulation Rate: According to EPA and GTI, dehydration systems operated near design circulation rates improve dehydrator efficiency, reduce energy usage, save gas, and reduce maintenance requirements. GTI identifies optimized systems as those which circulate glycol at 2 to 3 gallons per pound (gal/lb) of water removed. The design circulation rate of the QLD process pump is 5 gpm, which is within this range. The GHG Center will measure the actual circulation rate at a rate of one reading per minute using a turbine flow meter supplied by the host site. The measured flow rate will be used to report average daily circulation rate for the 7-day monitoring period.

- Natural Gas Fuel Flow Rate: The flow rate of makeup gas to the reboiler burner will be monitored using a turbine meter supplied and operated by the host site. The meter is sized to measure flows as high as 600 scfh, should the reboiler operate on makeup gas only. Flow rates during normal operating conditions are expected to range between 100 and 166 scfh. The data will be stored as 1-minute average readings. Daily average fuel flow rates for each of the seven monitoring days will be reported.

**Environmental Performance**

Environmental performance parameters are selected to quantify emission rates of criteria pollutants, GHGs, and HAPs in the reboiler stack. To determine the QLD's ability to recover/destroy HAPs that

would normally be emitted to the atmosphere, the GHG Center will also verify HAP destruction efficiency. These environmental parameters will be verified over a 1-day test period while the system is operating at "normal conditions". Three test runs in duration of 90-minutes each, will be executed.

Steady state or normal operating conditions will be established after the 7 days of operational testing is concluded. The sales gas flow rate, makeup gas flow rate, and glycol circulation rate will be used to define the criteria for normal conditions, and environmental performance testing will be initiated only when this criteria is met. Using the 1-minute operational data, normal conditions will be selected as the flow rates represented by ¾ or 75 percent of the individual flow values. For example, as discussed in Section 1.5, if the makeup gas flow rate is observed to be between 2.0 and 2.8 scfm, and 75 percent of the flow rates are between 2.0 and 2.5 scfm, then this range will be identified as the normal operating range for makeup gas. Emissions testing and HAP destruction efficiency determination will occur when the flow rates of all three variables (sales gas, makeup gas, and glycol circulation) is within the normal range. If actual values are observed to be outside this range during a test (i.e., due to process upsets), the test run will be invalidated and repeated. The following discussion summarizes the approach for each environmental performance parameter.

- Reboiler Stack Emission Rates: The QLD routes still vent vapors to the glycol re-boiler for combustion, after water and liquid hydrocarbons are recovered. Emissions from the reboiler stack will be quantified because this fuel gas will contain VOCs and HAPs, and moisture may be present which can inhibit combustion. Testing will be conducted using EPA Reference test methods, and will consist of three 90-minute test runs over a 1-day test period. Average concentrations in units of parts per million volume (ppm) and average emission rates, in units of lbs/hr, will be reported for the following pollutants: BTEX, total HAPs, $CH_4$, CO, $CO_2$, $NO_X$, and VOC. Total HAPs are defined as the sum of BTEX and n-Hexane emission rates, which represent over 99 percent of total emissions.

  Methane in the reboiler stack is expected to be the primary source of greenhouse gas emissions. Other sources of GHG emissions include fugitive leaks from process vents, valves, fittings, and other. These leaks will be screened prior to testing, and any leaks found will be fixed by ECL prior to testing. The lbs/hr GHG emission rates from the reboiler stack will be normalized to natural gas throughput, and reported as lbs carbon equivalent/ MMcfd gas processed. The GHG Center does not plan to compute GHG emission reductions because baseline emissions can vary significantly depending on the type of equipment used by a particular site. For example, sites with flash tank separators will have significantly lower GHG emissions than sites that directly vent the gas through a still column. Most natural gas dehydration facilities are required to report site specific emission levels for regulatory purposes. These operators employ direct measurement techniques or natural gas dehydration models to estimate emissions for their sites. The users can estimate their own GHG emission reductions by subtracting the normalized emission rate with site specific emission rate.

- HAP Destruction Efficiency: 40 CFR Part 63 (Subpart HH) requires HAP emissions to be reduced by 95 percent from glycol dehydrators. Given that the QLD technology is new and contains significant design changes from conventional technology, regulatory organizations and industry customers will likely desire a demonstration of HAP destruction efficiency. The GHG Center will quantify the destruction efficiency by measuring BTEX and n-Hexane levels in all streams

entering (i.e., exiting the absorption tower) and exiting the QLD technology (i.e., HAPs entering the absorption tower from the lean glycol feed, HAPs dissolved in the wastewater stream, and unburned HAPs emitted from the burner stack). HAPs contained in the condensate stream will not be considered an emission source, since it is a recovered product. The percent difference between the input and output streams will be used to report destruction efficiency corresponding to the 90-minute emissions test runs. Average destruction efficiency for the three test runs will be reported.

Detailed discussions of the measurement approach, analytical procedures, and data quality requirements for each verification parameter are provided in Sections 2 and 3.

Although not expected, small variations in QLD performance may occur as a result of changing ambient conditions. ECL claims that the QLD is designed such that key process equipment will operate normally under typical variations in ambient conditions. The primary factor that would challenge the QLD is the properties of the incoming natural gas stream. The host site has indicated that elevated ambient temperatures could affect the moisture content of the incoming natural gas stream. For this reason, the GHG Center will perform the verification test during high ambient temperatures (i.e., daytime). Atmospheric data will be monitored continuously in 1-minute intervals, and average daily temperature and pressure will be computed to report the conditions during which testing occurred. This data will not be used to perform any calculations, but will provide background information on the conditions during which testing occurred and to quantify its affects on operational parameters.

### 1.6 ORGANIZATION

Figure 1-3 presents the project organization chart. The functions, responsibilities, and lines of communications for the verification test participants are discussed below.

**Figure 1-3. Project Organization**

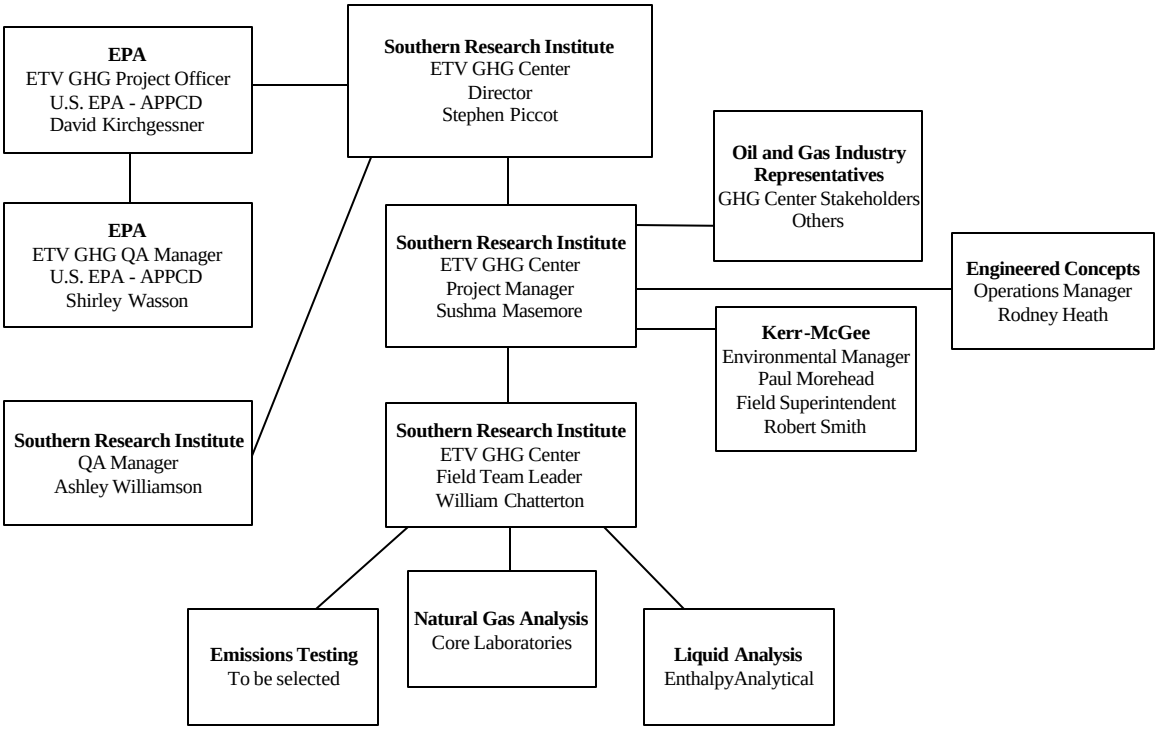

Southern Research Institute's GHG Center has overall responsibility for planning and ensuring the successful implementation of this verification test. The GHG Center will ensure effective planning and coordination, development and adherence to test schedules, and high-quality independent testing and reporting.

Mr. Steve Piccot is the GHG Center Director. He will ensure the staff and resources are available to complete this verification as defined in this Test Plan. He will review the Test Plans and Verification Reports to ensure they meet ETV operating guidelines. He will oversee the activities of the GHG Center staff, and provide management support where needed. Mr. Piccot will sign the Commitment Letter.

Ms. Sushma Masemore of the GHG Center will have the overall responsibility as the Project Manager. She will be responsible for overseeing field data collection activities of the GHG Center's Field Team Leader. Ms. Masemore will follow the procedures outlined in Sections 2.0 and 3.0 to make this determination, and will have the authority to repeat tests as determined necessary to ensure that data quality goals are met. Should a situation arise during testing that could affect the health or safety of any personnel, Ms. Masemore will have full authority to suspend testing. She will also have the authority to suspend testing if quality problems occur. In both cases, she may resume testing when problems are resolved. Ms. Masemore will be responsible for maintaining communication with ECL, Kerr-McGee, EPA, and stakeholders.

Mr. Bill Chatterton, of the GHG Center, will serve as the Field Team Leader, and will support Ms. Masemore's data quality determination activities. The Field Team Leader will provide field support activities related to all measurements and data collected. He will install and operate the measurement instruments, collect liquid samples, and ensure that QA/QC procedures outlined in Section 2.0 are followed. He will be responsible for ensuring that performance data collected by continuously monitored instruments and manual sampling techniques are based on procedures described in the Test Plan. Mr. Chatterton will also coordinate the activities of the emissions testing contractor and analytical laboratories, and will ensure testing is conducted according to procedures described in the Test Plan.

The GHG Center's Quality Assurance Manager, Dr. Ashley Williamson, will review and approve this Test Plan. He will also review the results from the verification test, and conduct an Audit of Data Quality (ADQ), described in Section 4.4.3. Dr. Williamson will report the results of the internal audits and corrective actions to the GHG Center Director. The results will be used to prepare the final Verification Report.

Mr. Rodney Heath, Operations Manager, will serve as the primary contact person for ECL. He will provide technical assistance and coordinate installation and operation of the QLD at the test site, and will be present during the verification. Mr. Heath will coordinate with the Kerr-McGee field operators to ensure the unit and host site are available and accessible to the GHG Center for the duration of the test. ECL will ensure safe operation of the unit and demonstrate necessary safety features, and provide on-site support as needed to accomplish the goals of the verification testing. ECL will review the Test Plan and Verification Report and provide written comments.

Mr. Robert Smith of Kerr-McGee will provide access to the test site during verification testing. He will also supply and operate the natural gas flow meters, and glycol circulation meters that will be used in the verification. Mr. Smith will provide specifications and quality assurance data to the GHG Center for each instrument supplied by Kerr-McGee. During verification testing, Mr. Smith will provide 1-minute data collected by the instruments in electronic or paper format. Kerr-McGee will review the Test Plan and Verification Report and provide written comments.

The GHG Center stakeholder members and other industry users will be invited to review the Test Plan and Verification Report. These industry peer-reviewers will advise the GHG Center on the selection of verification factors and provide guidance to ensure that the overall verification is based on recognized and reliable field measurement and data analysis procedures acceptable to industry and other stakeholders. These individuals will also support the wide distribution of the final verification results.

EPA-ORD's Air Pollution Prevention and Control Division (APPCD) will provide oversight and QA support for this verification. The EPA-APPCD Project Officer, Dr. David Kirchgessner, is responsible for obtaining final approval of the Test Plan and Verification Report. The APPCD QA Manager reviews and approves the Test Plan and final Verification Report to ensure they meet the GHG Center's QMP requirements and represent sound scientific practices.

## 1.7 SCHEDULE

The tentative schedule of activities for testing the QLD technology is as follows:

| | |
|---|---|
| **Verification Test Plan Development** | |
| GHG Center Internal Draft Development | March 1 - April 23, 2002 |
| Vendor and Host Site Review/Revision | April 24 – May 6, 2002 |
| EPA and Industry Peer-Review/Revision | May 8 - 24, 2002 |
| Final Document Posted | June 30, 2002 |
| **Verification Testing and Analysis** | |
| Measurement Instrument Installation/Shakedown | November 11 – 15, 2002 (tentative) |
| Field Testing | November 18 – 22, 2002 (tentative) |
| Data Validation and Analysis | November 23 – December 6, 2002 |
| **Verification Report Development** | |
| GHG Center Internal Draft Development | December 7 – 26, 2002 |
| Vendor and Host Site Review/Revision | December 27, 2002 – January 18, 2003 |
| EPA and Industry Peer-Review/Revision | January 19 – February 14, 2003 |
| Final Document Posted | February 15, 2003 |

## 2.0 VERIFICATION APPROACH

### 2.1 OVERVIEW

The QLD technology is intended to remove water vapor from the natural gas supplied by gathering pipelines or other upstream processes. The operational performance parameters associated with this verification test will be measured over 7 days, and emissions performance parameters will be measured over 1 day during which the system is identified to be operating at normal conditions. Table 2-1 summarizes the test matrix, and identifies each of the required measurements and type of data to be collected. Figure 2-1 illustrates the measurement system and provides numbered Locations where verification data will be collected. These numbered Locations are referenced in various Locations throughout this Test Plan.

**Figure 2-1. Schematic of Measurement System**

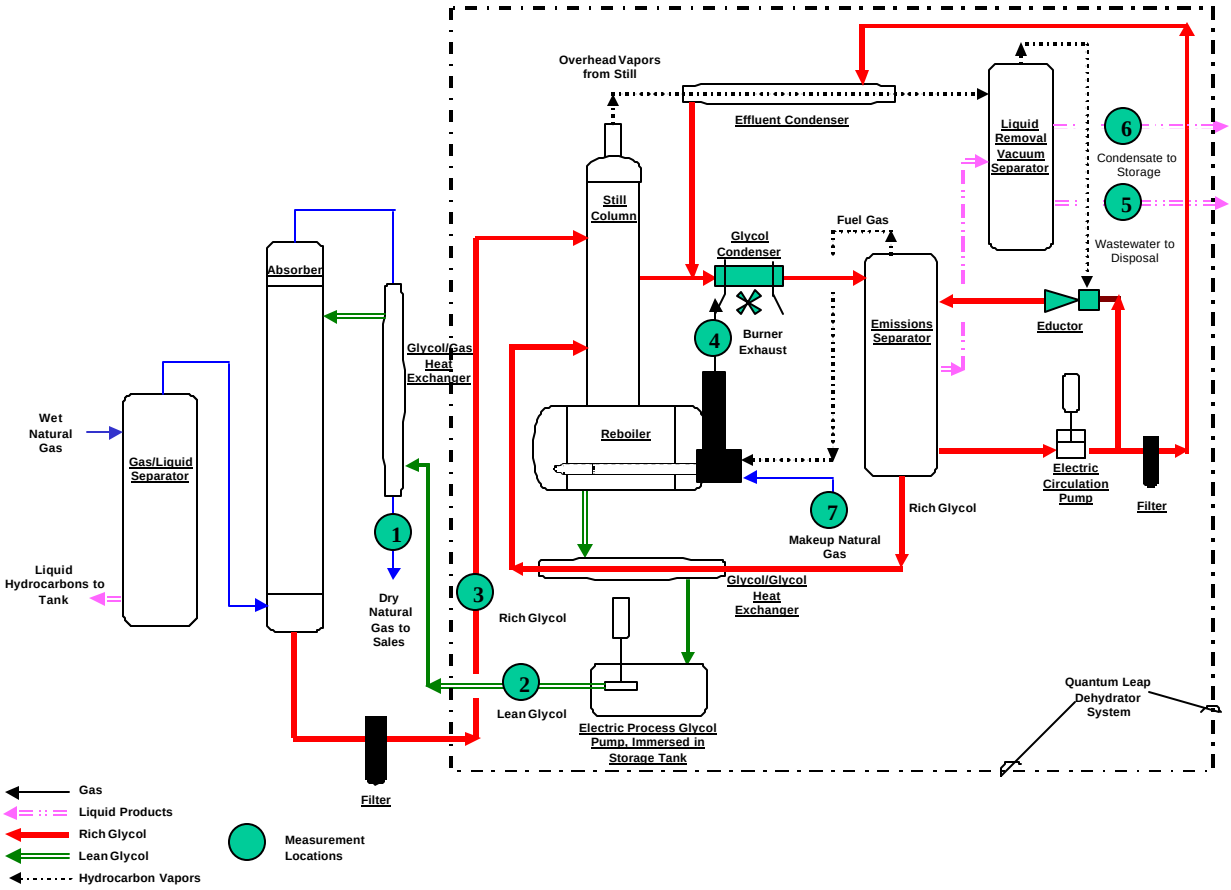

**Table 2-1. Verification Test Matrix**

| Verification Parameter | Location | Description[b] | Units | Method/ Instrument | Sampling Intervals[a] |
|---|---|---|---|---|---|
| Sales Gas Quality and Production Rate | 1 | Sales Gas Moisture Content | lb $H_2O$ / MMscf gas | Electrolytic Moisture Transmitter | 1-min averages, reported as a daily average |
| | | Sales Gas Flow Rate | MMscfd | Integral Orifice Meter | 1-min averages, reported as a daily total |
| Process Glycol Circulation Rate | 2 | Lean Glycol Flow Rate (entering the absorber) | gal/hr | Turbine Flow Meter | 1-min averages, reported as a daily average |
| Makeup Gas | 7 | Makeup Natural Gas Fuel Flow Rate | scfh | Turbine Flowmeter | 1-min averages reported as a daily average |
| | | BTEX in Makeup Natural gas | $mg/ft^3$ | Sample Collection by GHG Center, Analysis by Core Laboratories | 3 gas samples collected per test run (if preliminary samples indicate BTEX > 10,000 ppm) |
| Reboiler Stack Emission Rates | 4 | $CO_2$, $NO_X$, CO, $CH_4$, THC, BTEX, total HAP | ppm and lb/hr | Varies, See Table 2-2 | three test runs (90 minutes each), reported as average for each test run |
| HAP Destruction Efficiency | 2 | Lean Glycol Flow Rate (entering the absorber) | gal/hr | Turbine Flow Meter | 1-min averages, reported as average for each test run |
| | | HAPs in Lean Glycol (entering the absorber) | mg/l | Sample Collection by GHG Center, Analysis by Enthalpy Analytical | 3 liquid samples per test run, reported as average for each test run |
| | 3 | Rich Glycol Flow Rate (exiting the absorber) | gal/hr | Aassigned Same as Process Glycol Circulation Rate Measured on the Lean Side | 1-min averages, reported as average for each test run |
| | | HAPs in Rich Glycol (exiting the absorber) | mg/l | Sample Collection by GHG Center, Analysis by Enthalpy Analytical | 3 liquid samples per test run, reported as average for each test run |
| | 5 | Wastewater Flow Rate | gal/hr | Record Discharge Occurrences and Volumes | Total number of discharge events for each test run |
| | | HAPs in Wastewater | mg/l | Sample Collection by GHG Center, Analysis by Enthalpy Analytical | 3 liquid samples per test run, reported as average for each run |
| | 6 | Condensate Flow Rate | gal/hr | Record Discharge Occurrences and Volumes | Total number of discharge events for each test run |
| | | HAPs in Condensates | mg/l | Sample Collection by GHG Center, Analysis by Enthalpy Analytical | 3 liquid samples per test run, reported as average for each run |

[a] For destruction efficiency, a test run corresponds to the 90-minute stack run
[b] HAPs are defined as the sum of BTEX and n-Hexane

The following subsections discuss the approach for verifying each parameter. Each subsection describes the measurement variables, presents the underlying concepts, specifies the applicable calculations, and

discusses the measurement instruments/sampling techniques. Error estimation procedures and data quality assessment criteria are discussed in Section 3.0.

- Sales Gas Quality and Production Rate (Section 2.2)
- Process Glycol Circulation Rate (Section 2.3)
- Natural Gas Fuel Flow Rate (Section 2.4)
- Reboiler Stack Emission Rates (Section 2.5)
- HAP Destruction Efficiency (Section 2.6)

## 2.2 SALES GAS QUALITY AND PRODUCTION RATE

The condition of the dry natural gas stream leaving the glycol/gas heat exchanger is the primary indicator of the QLD technology performance. This stream must not exceed moisture levels specified by the site to be considered suitable for sales gas (< 7 lb water / MMscf gas). To verify the ability of the QLD to meet this requirement, and to verify the production rate handled by the system, direct measurements of natural gas moisture content and production rate will be made (Location 1, Figure 2-1). One-minute average measurement data will be used to compute a daily total gas flow rate and daily average moisture content. Sections 2.2.1 and 2.2.2 describe the instrumentation and methods that will be used to verify these two parameters.

### 2.2.1 Sales Gas Moisture Analysis

The host site currently employs a moisture meter to continuously monitor the water content of the sales gas. This meter will be used to document this parameter during the verification. The meter is located in an 8-inch diameter natural gas pipeline. The meter is a MEECO Accupoint 2 electrolytic moisture transmitter that provides a continuous indication of sales gas moisture levels. The range of the instrument will be set at 0 to 20 lbs $H_2O$/MMscf, with a lower detection limit (LDL) of 0.2 lbs/MMscf, and a rated accuracy of ± 5 percent of reading.

The Accupoint 2 operates on the basis of Faraday's Law of Electrolysis in that the meter's sensor absorbs and electrolyzes moisture present in the gas. A stream of sales gas is passed through a hollow glass tube containing two electrodes that are lined with a hygroscopic film. The gas enters the cell at a known flow rate, and the hygroscopic film absorbs all moisture present in the gas stream. An electrical potential (voltage) is applied to the electrodes, and the absorbed water is electrolyzed, generating a finite current. The sensor's current output (4 to 20 mA), is linearly proportional to the amount of water absorbed, and is updated every second. The meter will transmit the 4 to 20 mA output over the meter's range to the plant's control center, where 1-minute average values will be stored. Copies of the daily files will be obtained from the facility's control center, and an average value for the test day will be computed and reported.

### 2.2.2 Sales Gas Flow Rate

The mass flow rate of the gas supplied to the sales pipeline will be determined using an orifice meter (Emerson MVS205 Multi-Variable Sensor). This meter is owned and operated by the host site and is located in the same 8-inch diameter pipe line where moisture measurements are made. The plant uses the meter to monitor and document plant production and operations. The meter is not used as a sales gas transfer standard, although it does meet transfer standard specifications.

The meter contains a 4.00-inch orifice plate that enables the facility to monitor gas flow measurements

accurately in the ranges experienced during typical plant operations (1 MMscfh natural gas). The meter is temperature- and pressure-compensated, providing mass flow output at standard conditions (60 °F, 14.7 psia). Gas flows are continuously monitored at a rate of one instantaneous reading per second, and will be capable of providing an accuracy of ± 1 percent of reading. The meter will be fitted with a transmitter providing a 4 to 20 mA output over the meter's range. This output will be wired to the plant's control center, and copies of the daily files will be obtained from the facility's control center. Daily gas production rate will be computed as the sum of 1-minute averages for one full day of testing.

### 2.3 PROCESS GLYCOL CIRCULATION RATE

The rate at which glycol is circulated throughout a dehydration system provides a direct indication of the dehydration system performance. Over circulation could result in a significant drop in system efficiency (i.e., energy consumption from pumps), more makeup natural gas consumed to operate the reboiler, or more pollutants to be absorbed and eventually emitted to the atmosphere. To minimize such impacts, some facilities affected by the 40 CFR Part 63 standard, which includes the host site, are required to continuously monitor glycol circulation rates.

Glycol flow rates can be directly measured using an in-line flow meter or estimated using procedures developed by GTI. For gas driven pumps, the estimation technique consists of counting the number of pump strokes occurring over a given time, and then converting this to a glycol circulation rate using manufacturer's specifications for the pump. For electric pumps, the glycol circulation rate is calculated based on displacement and revolutions per minute. Due to the potential variability that could exist with the estimation techniques, flow rates will be directly measured using a Halliburton MC-II EXP flow analyzer. The site operators are installing this flow meter to satisfy operating permit requirements.

The Halliburton flow analyzer will be installed on the 0.75-inch nominal lean glycol pipeline at a point downstream of the glycol storage tank (Location 2, Figure 2-1). The flow analyzer comprises a turbine fluid meter and integral signal display and transmitter, with a linear flow range of 2 to 15 gallons per minute (gpm) and a factory certified accuracy of ± 1 percent of reading. During factory calibration, the meter is programmed with a fluid specific calibration factor (TEG in this case), and calibrated at five points in the operating range using a piston-type volume prover. The turbine meter measures fluid velocity, and the transmitter converts the fluid velocity measurements to volumetric flow using pipe diameter and fluid properties (e.g., density and viscosity) data programmed into the unit by the user.

The analyzer produces an analog output signal of 4 to 20 mA over its full range, updated at 1-second intervals. The output signals are recorded and stored in the plant's control center. The GHG Center will obtain this data to compute 1-minute average flow rates in units of gpm. The average of all 1-minute flows will represent the daily average glycol circulation rate.

The 1-minute readings will also be used to determine the amount of HAPs destroyed or recovered by the QLD. This will consist of determining the mass flow rate of HAPs entering the QLD (i.e., the amount absorbed in the rich glycol, Location 3) and exiting the QLD (i.e., the amount leaving the storage tank, Location 2). Further use of this data to compute HAP destruction efficiency is discussed in Section 2.6.

### 2.4 MAKEUP GAS FUEL FLOW RATE

Natural gas input to the reboiler burner is expected to range between 100 and 166 scfh or 20 to 30 percent of the total fuel input to the burner, respectively. ECL expects the makeup natural gas to remain relatively constant once the system has stabilized. One minute average flow rate measurements will be collected to compute a 24-hour average fuel flow rate.

The amount of makeup gas diluted with the hydrocarbon vapors recovered by the condensation process, and subsequently burned in the reboiler will impact reboiler stack emissions. That is, fuel consisting of 20 percent natural gas and 80 percent hydrocarbon vapors will likely emit higher HAP emissions than fuel consisting of 30 percent natural gas and 70 percent hydrocarbon vapors. To ensure emissions testing and destruction efficiency are evaluated at representative operating conditions, the 1-minute natural gas fuel flow rate data will be also be used to identify conditions when emissions testing will be conducted.

Makeup natural gas flow rates will be monitored using a Halliburton MC-II EXP flow analyzer installed on the 1-inch inside diameter gas line upstream of the reboiler (Figure 2-1). The Halliburton flow analyzer is a turbine meter and integral signal display and transmitter, with a linear flow range sufficient to measure gas flows should the reboiler operate on makeup gas only (0 to 600 scfh). The meter is supplied with a factory certified accuracy of ± 1 percent of reading. During factory calibration, the meter is programmed with a fluid specific calibration factor for natural gas, and calibrated at five points in the operating range using a piston-type volume prover. The turbine meter measures gas velocity, and the transmitter converts the fluid velocity measurements to volumetric flow using pipe diameter data programmed into the unit by the user. The meter is temperature- and pressure-compensated, providing mass flow output at standard conditions (60 $^{o}$F, 14.7 psia).

The analyzer produces an analog output signal of 4 to 20 mA over the full range of the analyzer, updated at 1-second intervals. The output signals will be recorded and stored on the site's control center and averaged into 1-minute intervals. The GHG Center will obtain this data and compute daily average makeup gas flow rates.

### 2.5 REBOILER STACK EMISSION RATES

Reboiler stack emissions testing will be conducted to determine emission rates for the following air pollutants: $NO_X$, CO, THCs, greenhouse gases ($CO_2$ and $CH_4$), BTEX, and total HAPs (BTEX plus n-Hexane).

Exhaust stack emissions testing will be conducted following NSPS guidelines for evaluation of emissions from gas-fired boilers. Three replicate test runs, each approximately 90 minutes in duration, will be conducted for each parameter while the system is operating at normal conditions. Individual test runs, and the average result of three valid test runs will be reported.

Many of conventional dehydration units use thermostatically controlled burners that cycle on and off as heat is needed. This can complicate emissions testing by forcing the tester to interrupt tests when the burner shuts off. However, the QLD reboiler burner incorporates a throttling burner that operates continuously during system operation, eliminating the need to capture burner operating cycles, and allowing test runs to be completed without interruptions.

The rate of makeup gas entering the reboiler burner is expected to range between 1.7 and 2.8 scfm natural gas. ECL expects the makeup gas to remain relatively constant once the system has stabilized. Emissions

testing will be conducted while the reboiler is firing makeup gas that is within normal operating conditions, as observed during the 7 days of continuous monitoring. The criteria for defining normal operating conditions was discussed earlier in Section 1.5, and is not repeated here.

An organization specializing in air emissions testing (as yet unspecified), will be contracted to perform all stack testing. The testing contractor will provide all equipment, sampling media, and labor needed to complete the testing and will operate under the supervision of GHG Center Field Team Leader. Table 2-2 summarizes the standard U.S. EPA Federal Reference Methods that will be followed. These Reference Methods are well documented in the Code of Federal Regulations, and are used to determine pollutant levels from a wide variety of sources, including gas-fired burners such as this regenerator. They include procedures for selecting measurement system performance specifications and test procedures, quality control procedures, and emission calculations (40CFR60, Appendix A).

**Table 2-2. Summary of Emission Testing Methods**

| Measurement Variable | U.S. EPA Reference Method | Principle of Detection | Proposed Analytical Range[a] | No. of Test Replicates |
|---|---|---|---|---|
| $O_2$ | 3A | Paramagnetic | 0 to 25 % | 3 replicate test runs (90 minutes) |
| $CO_2$ | 3A | NDIR | 0 to 20 % | |
| $NO_X$ | 7E | Chemiluminescence | 0 to 100 ppm | |
| CO | 10 | NDIR-Gas Filter Correlation | 0 to 100 ppm | |
| $CH_4$ | 18 | GC/FID | 0 to 100 ppm | |
| THC | 25A | Flame ionization | 0 to 100 ppm | |
| BTEX[b], n-Hexane | 18 | GC/FID | 0 to 50 ppm | |
| Exhaust gas volumetric flow rate | 2C | Differential Pressure | 9,000 to 11,000 scfh[c] | |
| Moisture | 4 | Gravimetric | 0 to 100 % | |

[a] Based on AP-42 emission factors for gas-fired boilers of this size (<100 MMBtu/hr).
[b] Includes separate quantification of benzene, toluene, ethylbenzene, and xylene.
[c] Expected range of flow rate based on reboiler design heat input.

The Reference Methods generally address the elements listed below:

- Applicability and principle
- Range and sensitivity
- Definitions
- Measurement system performance specifications
- Apparatus and reagents
- Measurement system performance test procedures
- Quality control procedures
- Emission calculations
- Bibliography

Each of the selected methods utilizing an instrumental measurement technique includes performance-based specifications for the gas analyzer used. These performance criteria cover span, calibration error, sampling system bias, zero drift, response time, interference response, and calibration drift requirements. Each test method planned for use is discussed in more detail in the following subsections. The Reference Methods will not be repeated here, but will be available to site personnel during testing, and can be obtained and viewed using the Code of Federal Regulations (40CFR60, Appendix A).

#### 2.5.1 Gaseous Sample Conditioning and Handling

A schematic of the sampling system to be used to measure concentrations of $CO_2$, $O_2$, $NO_X$, CO, and THC is presented in Figure 2-2. In order for the $CO_2$, $O_2$, $NO_X$, and CO measurement instruments to operate properly and reliably, the flue gas must be conditioned prior to introduction into the analyzer. The gas conditioning system is designed to remove water vapor from the sample. All interior surfaces of the gas conditioning system are made of stainless steel, Teflon™, or glass to avoid or minimize any reactions with the sample gas components. Gas is extracted from the burner exhaust through a stainless steel probe and sample line. The gas is then transported using a sample pump to a gas conditioning system that removes moisture. An ice-bath type condensing system will be used to remove the moisture. The clean, dry sample is then transported to a flow distribution manifold where sample flow to each analyzer is controlled. Calibration gases can be routed through this manifold to the sample probe by way of a Teflon line. This allows calibration and bias checks to include all components of the sampling system. The distribution manifold also routes calibration gases directly to the analyzers, when linearity checks are made on each.

The THC analyzer is equipped with a flame ionization detector (FID). This detector analyzes gases on a wet, unconditioned basis. Therefore, a second, heated sample line is used to deliver unconditioned exhaust gases from the probe to the THC analyzer.

**Figure 2-2. Gas Sampling and Analysis System**

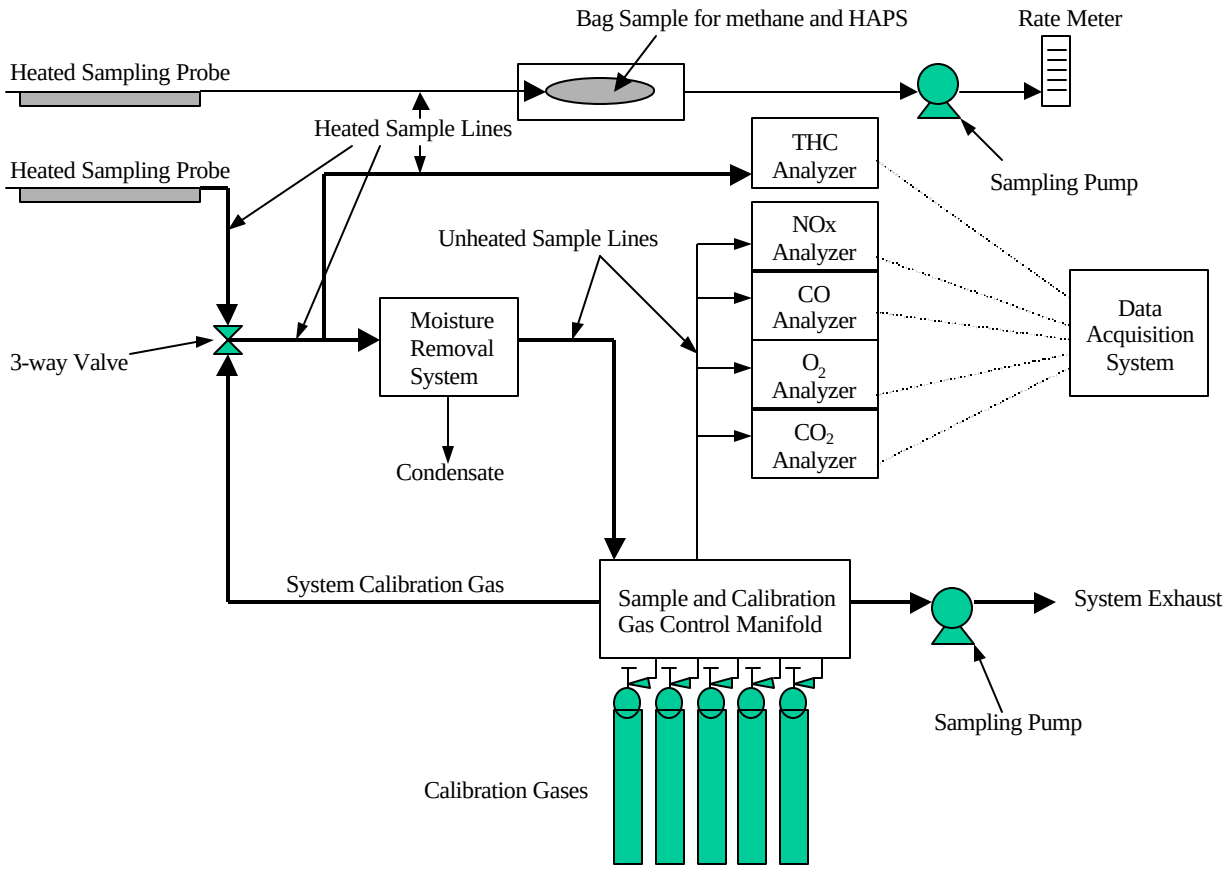


#### 2.5.2 Gaseous Pollutant Sampling Procedures

For $CO_2$ and CO determinations, a continuous sample will be extracted from the emission source and passed through a non-dispersive infrared (NDIR) analyzer (California Analytical Model CA-300P or equivalent). For each pollutant, the NDIR analyzer measures the amount of infrared light that passes through the sample gas versus through the reference cells. Because $CO_2$ and CO absorb light in the infrared region, the degree of light attenuation is proportional to the $CO_2$ and CO concentrations in the sample. The $CO_2$ and CO analyzer ranges will be set at or near 0 to 20 percent for $CO_2$ and 0 to 100 ppm for CO based on AP-42 emission factors for gas-fired boilers. Analyzer ranges will be modified during testing if proposed ranges are inadequate.

Oxygen content will also be analyzed with an analyzer using a paramagnetic reaction cell (California Analytical Model CA-300P or equivalent). This analyzer uses a measuring cell that consists of a mass of diamagnetic material, which is electronically temperature controlled to a temperature of 50 $^{o}$C. The higher the sample $O_2$ concentration, the greater the mass is deflected from its rest position. This deflection is detected by an optical system connected to an amplifier. Surrounding the dumbbell is a coil of wire with a current passed through the wire to return the dumbbell to its original position. The current

applied is linearly proportional to the $O_2$ concentration in the sample. Exhaust gas $O_2$ concentrations are expected to be 8 to 12 percent, so the $O_2$ analyzer range will be set at or near 0 to 25 percent.

Nitrogen oxides will be determined on a continuous basis using a chemilumenescence analyzer (Monitor Labs Model 8840 or equivalent). This analyzer catalytically reduces $NO_X$ in the sample gas to NO. The gas is then converted to excited $NO_2$ molecules by oxidation with $O_3$ (normally generated by ultraviolet light). The resulting $NO_2$ luminesces in the infrared region. The emitted light is measured by an infrared detector and reported as $NO_X$. The intensity of the emitted energy from the excited $NO_2$ is proportional to the concentration of $NO_2$ in the sample. The efficiency of the catalytic converter in making the changes in chemical state for the various $NO_X$ compounds is checked as part of instrument set up and checkout. Based on AP-42 emission factors, the $NO_X$ analyzer will be operated on a range of 0 to 100 ppm.

Concentrations of THC will be measured using a flame ionization analyzer (California Analytical Model 300 AD or equivalent) which passes the sample through a hydrogen flame. The intensity of the resulting ionization is amplified, measured, and then converted to a signal proportional to the concentration of hydrocarbons in the sample. Unlike the other methods, the sample stream going to the analyzer does not pass through the condenser system, so it must be heated until analyzed. This is necessary to avoid loss of the less volatile hydrocarbons in the gas sample. Because many different hydrocarbons are being analyzed, THC results will be normalized and reported as $CH_4$ equivalent. The calibration gas for the THC analysis will be methane. The THC results are measured as ppmv on a wet basis, but will be corrected to ppmvd based on measured exhaust gas moisture measurements made in conjunction with the testing. In conjunction with each emissions test run, an EPA Reference Method 4 test will be conducted to determine the moisture content of the exhaust gases.

Concentration of $CH_4$, BTEX, and n-Hexane will be determined in accordance with Method 18. Time integrated exhaust gas samples will be collected in Tedlar bags using a lung-type sampler. Time integration of samples is accomplished by controlling the flow of gas into the bag (using a needle valve or orifice) so that the sample is slowly collected over the duration of the test run (approximately 90 minutes). If moisture condensation is observed in the sampling train, moisture knockout impinger will be located in the sampling train upstream of the Tedlar bag. Any significant moisture will be collected in the impinger, recovered in 40 ml VOA vials, and submitted to the laboratory for analysis. The HAP test result will be the combination of the HAP detected in the water and the bag samples. Collected samples will be properly documented in the field and shipped to an analytical laboratory with chain-of-custody records. At the laboratory, samples will be separately analyzed for $CH_4$ and the four BTEX compounds using a gas chromatograph equipped with a flame ionization detector (GC/FID). Duplicate analyses will be conducted on each sample. The GC will be calibrated prior to sample analyses using certified standards for $CH_4$, BTEX, and n-Hexane. Sample bags will be leak checked by inflating the bags prior to testing to a pressure of 10 inches of water, allowing the bags to sit overnight, and recording the final pressure. Loss of pressure indicates a leak and the bag will be rejected. Similar to the THC results described above, results are measured as ppmv on a wet basis, but will be corrected to ppmvd based on measured exhaust gas moisture measurements made in conjunction with the testing.

#### 2.5.3 Determination of Emission Rates

The instrumental testing for $CO_2$, $O_2$, $NO_X$, CO, THC, $CH_4$, BTEX, and n-Hexane provides results of exhaust gas concentrations in units of percent for $CO_2$ and $O_2$ and ppmvd for $NO_X$, CO, THC, $CH_4$, BTEX, and n-Hexane.

To convert measured pollutant concentrations to mass emissions, exhaust gas flow rate determinations will be conducted for each test run in accordance with EPA Method 2C. Stack standard gas velocity and temperature traverses will be conducted using a calibrated thermocouple, a pitot tube, and an inclined oil

manometer. The exhaust stack is 10 inches in diameter and extends vertically for 20 feet above the reboiler exit (total of 24 diameters of straight run). Test ports for velocity traversing will be located at least 80 inches (8 diameters) downstream of the reboiler. Following EPA Method 1A criteria for selection of traverse points in small stacks, a total of 8 velocity traverse points will be sampled. At the conclusion of each test run, stack gas velocity will be calculated using the following equation:

$$V_s = 85.49 * C_p * Avg\left(\sqrt{\Delta P}\right) * \sqrt{\frac{T_s}{P_s M_s}} \qquad \text{(Eqn. 1)}$$

Where:
- $V_s$ = Stack gas velocity, ft/sec
- $C_p$ = Pitot coefficient, dimensionless
- P = Average velocity head, inches water
- $T_s$ = Average stack temperature, $^oR$
- $P_s$ = Absolute pressure in stack, inches Hg
- $M_s$ = Molecular weight of stack gas, lb/lb-mole

Measured gas velocities will be converted to volumetric flow rate in standard terms using the following equation:

$$Q = 60\ (1 - B_{ws})\ V_s\ A_s \left[\frac{T_{std}\ P_s}{T_{s(abs)}\ P_{std}}\right] \qquad \text{(Eqn. 2)}$$

Where:
- $Q_{std}$ = Volumetric flow rate, dscf/min
- $B_{ws}$ = Water vapor in stack gas from Method 4, vol. proportion
- $V_s$ = Stack gas velocity, ft/sec
- A = Stack cross sectional area, $ft^2$
- $T_s$ = Average stack temperature, $^oR$
- $P_s$ = Absolute pressure in stack, in. Hg
- $T_{std}$ = Standard temperature, 532 $^oR$
- $P_{std}$ = Standard pressure, 29.92 in. Hg

After converting measured pollutant concentrations to mass units of lb/scf, emission rate values will be calculated in units of pounds per hour (lb/hr) using the standardized volumetric flow rates. To allow users to perform their own GHG emission reduction calculations, the lb/hr emission rate for $CO_2$ and $CH_4$ will be normalized to the sales gas throughout.

All of the sampling and analytical procedures and reference methods cited here contain QA/QC procedures that will be followed to evaluate data quality. These procedures and DQOs are detailed in Section 3.5.

### 2.6 HAP DESTRUCTION EFFICIENCY

HAP destruction efficiency is a measure of the QLD technology's ability to destroy and recover HAPs entering the entire glycol regeneration system. The system boundaries are defined with the dashed lines shown in Figure 2-1. It will be computed as the net HAPs entering the system boundary (i.e., from the

rich and lean glycol lines) minus the HAPs leaving the boundary (i.e., discharged and vented), divided by the net HAPs entering the system (Equation 3).

$$DE = \frac{net\ HAP_{in} - HAP_{out}}{net\ HAP_{in}} = \frac{(HAP_{rich} - HAP_{lean}) - HAP_{vented} - HAP_{in\ water}}{(HAP_{rich} - HAP_{lean})}\ x\ 100 \qquad \text{(Eqn. 3)}$$

Where:

| | | |
|---|---|---|
| DE | = | System destruction efficiency, % |
| $HAP_{rich}$ | = | Average HAPs absorbed in rich glycol stream, Location 3, lb/hr |
| $HAP_{lean}$ | = | Average HAPs remaining in lean glycol stream, Location 2, lb/hr |
| $HAP_{vented}$ | = | Average HAPs vented from reboiler stack, Location 4, lb/hr |
| $HAP_{in\ water}$ | = | Average HAPs dissolved in wastewater, Location 5, lb/hr |

It will be determined for times corresponding to the three 90-minute emissions test runs. In order to achieve good confidence for this verification parameter, it is important to conduct the mass balance for all streams at the same time intervals and under representative operating conditions. The residence time of the process glycol in the storage tank is estimated to be 30 minutes, thus it is anticipated that between two and three regeneration cycles will be completed in a 90-minute test period. The overall average destruction efficiency will be computed as follows:

$$DE_{overall\ avg} = \frac{\sum_{i=1}^{n} DE_i}{n} \qquad \text{(Eqn. 4)}$$

Where:

| | | |
|---|---|---|
| $DE_{overall\ avg}$ | = | Overall average destruction efficiency, % |
| $DE_i$ | = | Destruction efficiency for each test duration |
| n | = | Number of valid test runs, 3 |

A 90 percent confidence interval will be computed for the overall average value using sample standard deviation and the number of test runs, as follows:

$$e = t_{.05,n-1}\left(\frac{s}{\sqrt{n}}\right) \qquad \text{(Eqn. 5)}$$

Where:

| | | |
|---|---|---|
| e | = | Half-width of the 90 percent confidence interval |
| $t_{.05,n-1}$ | = | 90 percent T distribution value, 2.920 for two degrees of freedom |
| s | = | Sample standard deviation of destruction efficiency |
| n | = | Number of valid test runs, 3 |

As shown in Equation 3, the amount of net HAPs entering the system is a function of the amount absorbed by the rich glycol stream (Location 3) and the amount remaining in the lean glycol stream (Location 2). It will be computed as the difference between the mass flow rates in both streams after condensation, separation, and combustion has occurred. Section 2.6.1 discusses the methodology for measuring HAPs in the rich and lean glycol streams.

Three output streams contain HAPs: the reboiler burner stack (Location 4), produced wastewater (Location 5), and condensed hydrocarbons (Location 6). The burner stack may emit unburned HAPs to the atmosphere. The HAPs dissolved in the wastewater may be emitted to the atmosphere during disposal, and is counted as an emission source.

For the condensed hydrocarbon stream, the host site plans to use this product as feedstock for other processes. The downstream effects of these processes may or may not result in HAPs emissions to the atmosphere. The Title 40 CFR Part 63 regulations are unclear whether this should be considered an emission source. For example, in the definitions (40 CFR 63.761), equipment intended to recover still vent vapors which are combusted or sold is not considered to be a control device. However, the control device test procedures specifically state that process heaters which combust recovered vapors are exempt from performance testing and are allowed a 95 percent destruction efficiency [40 CFR 63.772(e)(1)(iii), 63.771(d)(1)(i)]. Other paragraphs allow devices that condense and recover hydrocarbons for use as saleable product to be considered as control devices [63.771(d)(1)(ii)]. After consulting with the EPA regulatory office, the GHG Center has interpreted the regulations as if the HAPs (primarily BTEX) in the condensate is controlled or sequestered. Therefore, the destruction efficiency will be calculated based on HAPs in the stack gas and wastewater only, as shown in Equation 3.

Natural gas contains small amounts of BTEX (160 to 300 ppm). Thus it is conceivable that BTEX contained in the makeup natural gas stream (i.e., used to fire the reboiler) could affect the destruction efficiency determination. This input stream is not accounted for in Equation 3 because relatively small amounts of BTEX will enter the reboiler burner.

For example, maximum makeup gas fuel rate is expected to be 166 scfh, or 30 percent of total fuel input to the burner. With a BTEX concentration of 300 ppm, only 0.002 lb/hr BTEX will enter the reboiler burner from the makeup gas. The remaining 70 percent of the fuel (388 scfh) will be supplied by the hydrocarbon vapors recovered from the Emissions Separator. BTEX in the hydrocarbon vapor stream is expected to be 2.32 lb/hr or over 99 percent of total BTEX entering the burner. When both of these streams are combined and burned in the reboiler burner, unburned BTEX exiting the burner stack will be even smaller. In the example above, less than 0.00004 lb/hr of BTEX entering the makeup gas will be vented from the burner stack (assuming reboiler combustion efficiency is 98 percent). Conversely, more than 99 percent of BTEX exiting the stack (about 0.05 lb/hr) will have originated from the hydrocarbon vapor stream. As a result, the GHG Center does not plan to account for BTEX exiting the stack that originated from the makeup fuel, unless significantly elevated BTEX levels are detected in the makeup gas stream.

To ensure the above assumptions are valid, preliminary makeup gas samples will be collected and analyzed. If the BTEX concentration is found to be > 10,000 ppm or 0.10 lb/hr, natural gas samples will be collected during testing. The concentration measurements, combined with natural gas fuel consumption continuously monitored by the host site, will be used to estimate BTEX entering the makeup gas stream. This BTEX input stream will then be added to the BTEX input stream in Equation 3 to calculate destruction efficiency. Section 2.6.3 discusses the methodology for this measurement parameter.

#### 2.6.1 HAPs in Glycol Streams

The amounts of HAPs contained in the rich and lean glycol streams are calculated as follows:

$$HAP_{rich}\ (lb/hr) = C_{rich} \times F_{avg} \times \frac{3.7856}{453{,}600} \qquad \text{(Eqn. 6)}$$

$$HAP_{lean}\ (lb/hr) = C_{lean} \times F_{avg} \times \frac{3.7856}{453{,}600} \qquad \text{(Eqn. 7)}$$

| | | | |
|---|---|---|---|
| Where: | $C_{rich}$ | = | Concentration in rich glycol, Location 3, mg/L |
| | $C_{lean}$ | = | Concentration in lean glycol, Location 2, mg/L |
| | $F_{avg}$ | = | Average glycol circulation rate, gal/hr |
| | 3.7856 | = | L/gal |
| | 453,600 | = | mg/lb |

Direct flow measurement of the rich glycol stream is difficult due to the presence of multi-pollutant, multi-phase (liquid, vapor and some solids) products. For this reason, the natural gas industry, EPA, and GTI assign the process circulation rate measured on the lean glycol stream as the rich glycol flow rate. This is based on the principle that the rate at which glycol is circulated throughout the dehydration process is equivalent on both the lean side and the rich side (excluding affects of water dissolved in TEG). This concept is illustrated in GTI's "Atmospheric Rich/Lean (ARL) Method for Determining Glycol Dehydrator Emissions" (GTI 1996). BTEX, which is the primary HAP present from this source category, was selected as the target components in this method.

The ARL method contains procedures for determining BTEX emissions from still vent through direct measurement of glycol concentration and flow rates. It was intended to estimate still vent emissions without conducting direct emission measurement on the still column. The method performs a mass balance on the dehydration system, and assumes that BTEX in the rich glycol stream minus BTEX in the lean glycol stream is equivalent to the BTEX emitted from still vent column. The procedures were validated for 10 sites. BTEX inputs (Equation 6 minus 7) were determined by estimating lean glycol flow rates (i.e., counting pump strokes) and directly measuring BTEX concentrations in both rich and lean glycol streams. Still vent emissions were determined by totally capturing, condensing, and measuring the entire still vent flow.

For the ten sites, the percent difference between BTEX input and output stream was 8.2 percent. In general, no large systematic biases are evident in the ARL measurements for the BTEX compounds. "The largest components of experimental variability between the ARL and total capture methods were dehydrator process fluctuations from run to run. Uncertainty from sampling and analytical variability was insignificant compared with process variability" (GTI 1996). This suggests that BTEX measurement in the glycol streams is an affective means of determining total BTEX that would be released to the atmosphere, and in cases of add-on control devices, available for recovery and use. This study also supports that different quantity of water dissolved in rich glycol stream (4.3 wgt %) and lean glycol stream (1.4 wgt %) does not affect BTEX emission rate determination.

Although the QLD technology is different from conventional glycol dehydrators, in that still vent emissions are recovered and/or burned, the mass balance approach for HAPs (BTEX and n-Hexane) entering and exiting the system is still applicable. The ARL method assigned the lean glycol flow rate as the circulation rate for the entire process. Because the ARL method is widely accepted by regulators and the natural gas industry, the verification will also assign the lean glycol flow rate as the entire process circulation rate.

#### 2.6.1.1 Glycol Sampling

BTEX and n-Hexane concentrations in the rich and lean glycol streams will be determined by collecting liquid samples in 40 mL volatile organic analysis (VOA) vials. The samples will be forwarded to Enthalpy analytical laboratory for concentration analysis using gas chromatography (GC) with a flame ionization detector (FID). A minimum of three samples will be collected per test run, and their average value will be used in Equations 6 and 7. One duplicate sample will be collected per test run.

Rich glycol exits the dehydrator absorber at a pressure of approximately 850 psig. The glycol then passes through a motor valve controlled by a throttling level controller that reduces fluid pressure to approximately 20 psig and through a charcoal filter before being directed to the still column reflux coil. Samples will be collected from a petcock located at a point downstream of the charcoal filter and upstream of the still column (Figure 2-1). Rich glycol tends to foam and release volatile compounds when exposed to atmospheric pressure. To minimize this effect and the loss of organics, a 0.25-inch Teflon tube will be connected to the petcock and passed through an ice-water bath as recommended in the ARL method. This allows the glycol sample to remain cool, and prevents vaporization to the atmosphere. The vials will be capped immediately.

By assigning the lean glycol flow rate to the rich glycol stream, a bias could be introduced due to the higher water content in the rich glycol (approximately 5 percent). To minimize this bias, an aliquot of each rich and lean glycol sample will be analyzed for water content using the Karl Fisher titration procedure. Results of this analysis, with a repeatability of ± 10 percent, will be used to normalize the HAP concentrations measured in the rich glycol on the same basis (pure TEG) as the lean glycol samples. The normalized rich glycol results will then be used in Equation 6 to determine $HAP_{rich}$.

Lean glycol exits the reboiler, passes through a glycol/glycol heat exchanger, and is deposited in a surge tank for recirculation. The surge tank has an immersible pump that pressurizes the lean glycol back to approximately 850 psig and circulates the fluid back to the absorber. Samples will be collected from a petcock located on the surge tank, prior to pressurization of the glycol (identified on Figure 2-1). Similar to the rich glycol samples, samples will be cooled during collection.

Glycol sample collection will be documented on log forms (Appendix A-3), and the samples will be identified on chain-of-custody forms (Appendix A-6). The samples will be stored in coolers with ice before and during shipping to the laboratory for BTEX and n-Hexane analysis. A step-by-step glycol sampling procedure, recommended in the ARL, is documented in Appendix A-5.

#### 2.6.1.2 Glycol Sample Analyses

Sample analysis will be conducted following procedures specified in the ARL method. Upon receipt of the samples, an appropriate aliquot of each sample will be diluted with methylene chloride and then analyzed by direct injection into the GC/FID to determine BTEX and n-Hexane concentrations. The dilution is conducted to prevent damage to the analytical instrumentation. Analytical results are corrected for the dilution factor.

After injection into the GC, the HAP compounds will be separated using a capillary column (e.g., Restek 30m x 0.32 RTX-1) and analyzed using a Hewlett-Packard 5890 Series II GC/FID (or equivalent). The minimum detection limit (MDL) for these hydrocarbons using this method is ~1.00 ug/mL and the limit of quantification (LOQ) is 5.00 ug/mL. Any results that fall between the MDL and LOQ are reported as approximate values (that is, approaching the analytical sensitivity of the method). An example analytical report is provided in Appendix A-8.

The GC/FID will be calibrated using certified standards for each compound (prior to, during, and after sample analysis). Calibration results must agree with the predicted response by ± 5 percent. All liquid samples collected during testing will be analyzed in duplicate. In addition, the GC/FID procedures will be challenged further by three benzene blind audit samples. Further discussion of quality assessment procedures is provided in Section 3.5.

#### 2.6.2 HAPs in Wastewater and Condensate Product Streams

The QLD technology removes wastewater and hydrocarbon condensates from the rich glycol stream for disposal or recovery and sale. The system routes all produced wastewater and condensed hydrocarbon to the liquid removal Vacuum Separator as shown in Figure 2-1. Internal weirs, settling chambers, and density differences separate the water and hydrocarbon liquids from each other. Automatic level controllers open and close valves as the liquids accumulate, and the valves allow the liquids to discharge. The working pressure in the separator provides the motive force, and pipelines route the liquids to the appropriate storage tanks. The amount of HAPs dissolved in these streams is:

$$HAP_{\text{in water}}\,(\text{lb/hr}) = C_{water} \times F_{water} \times \frac{3.7856}{453{,}600} \qquad \text{(Eqn. 8)}$$

$$HAP_{\text{in condensate}}\,(\text{lb/hr}) = C_{condensate} \times F_{condensate} \times \frac{3.7856}{453{,}600} \qquad \text{(Eqn. 9)}$$

Where:

| | | |
|---|---|---|
| $C_{water}$ | = | Concentration in wastewater, mg/L |
| $C_{condensate}$ | = | Concentration in condensate product, mg/L |
| $F_{water}$ | = | Average flow rate of wastewater produced, gal/hr |
| $F_{condensate}$ | = | Average flow rate of condensates produced, gal/hr |
| 3.7856 | = | L/gal |
| 453,600 | = | mg/lb |

The following discussion illustrates the methodology for measuring flow rates (i.e., $F_{water}$ and $F_{condensate}$). Sections 2.6.2.1 and 2.6.2.2 discuss the methods for determining HAP concentrations (i.e., $C_{water}$ and $C_{condensate}$).

One pneumatic level controller is installed on the wastewater line, and another is installed on the condensate line. Each level controller operates over a nominal 1.5-inch range from a baseline level. For example, this means that as wastewater accumulates in the Vacuum Separator, the level will rise from a baseline level. When the controller's float senses a 1.5-inch increase, it opens the discharge valve and the wastewater discharges from the separator into the pipeline until the level returns to the baseline. This cycle repeats as needed during normal operations. The repeatability of the controller is 1/1000 of an inch. Each controller contains a counting mechanism which displays the number of times the controller was activated to discharge the liquids. For the size and configuration of the Vacuum Separator to be used at the test site, the liquid volume per each discharge event will be within ± 2 percent.

The two liquid products will accumulate at different rates during the verification testing. To quantify the average rate of wastewater or condensate discharged during a test run, it will be necessary to quantify the average volume of liquid discharged per event for both streams, and the total number of discharge events

occurring during a given test run for both streams. With this data, the average wastewater and condensate flow rates will be quantified for each test as follows:

$$F_i = \frac{Vol_{disch,i} N_i}{t} \qquad \text{( Eqn. 10)}$$

| | | | |
|---|---|---|---|
| Where: | $F_i$ | = | Average flow rate of the liquid, gal/hr |
| | $Vol_{disch,i}$ | = | Average volume of liquid per discharge event, gallons |
| | $N_i$ | = | Total number of complete discharge events occurring "around" the test period |
| | t | = | Time between completed discharge events, hr |
| | i | = | Wastewater or condensate |

The Vacuum Separator is a vertical cylindrical tank, 20-inches outside diameter (OD) with a 3/8-inch wall thickness. Preliminary estimates indicate that, for a 1.5-inch level change, each discharge event will remove approximately 1.89 gallons ($Vol_{disch,i}$) of liquid from the separator. Estimates based on the test facility's operations indicate that the QLD will produce approximately 13.2 gal/hr of produced water. This means that there should be between 5 and 7 discharge events of wastewater per hour. Condensed hydrocarbon discharges will be less frequent (3.8 gal/hr, or 2 to 3 discharge events/hr).

During a given test run, it is possible that wastewater and condensate discharge could occur in a manner that results in incomplete number of cycles. Since the QLD is a continuous process, it is possible that the first discharge event may not occur until several minutes after a test run is started and the last discharge may not occur until the run is completed. To account for this, Equation 10 requires the number of complete discharge events that encompass the test period. For example, assume that the first wastewater discharge event occurs at 12:50 pm and the last discharge event occurs at 2:35 pm for a test run defined to range between 1:00 pm through 2:30 pm. If a total number of 11 complete discharge events occur in 105 minutes, each at a rate of 1.89 gallons/event, the normalized liquid flow rate per hour would be 11.88 gallons/hr ($11 * 1.89/1.75$). This is the flow rate that would be used to compute pollutant concentrations per Equation 8. Appendix A-7 contains a log form and procedures for recording these readings.

Average volume of liquid produced per discharge event ($Vol_{disch,i}$) will be measured prior to beginning the verification test. The Field Team Leader will measure the change in the liquid level for several discharge event triggered by the level controller. He will attach a tape measure to the water level sight glass and to the condensate level sight glass, and record the fluid level immediately before and after at least three discharge occurrences of each product. An average level change will be computed for the three discharge cycles. Given the tank dimensions and the average level change, the amount of produced water or hydrocarbons during each discharge occurrence will be computed as shown in Equation 11. A 90 percent confidence interval will be computed using the three level change measurements.

$$Vol_{disch,i} = \frac{\left[\frac{(OD-(2WT))}{12} \div 2\right]^2 p\left(\frac{Delta_i}{12}\right)}{0.1337} \qquad \text{(Eqn. 11)}$$

| | | | |
|---|---|---|---|
| Where: | $Vol_{disch,i}$ | = | Average volume of liquid produced per discharge event, gallons |
| | OD | = | Tank outer diameter, inches |
| | WT | = | Tank wall thickness, inches |
| | 12 | = | Inches per foot |
| | $Delta_i$ | = | Average change in liquid level per occurrence, inches |
| | 0.1337 | = | Gallons per cubic foot |
| | i | = | Water or condensate |

A check will be performed on the above methodology by dumping the wastewater directly into a pre-measured liquid container (5 to 15 gallon) rather than discharging into site's storage tank. The volume contained in the liquid container will be compared with the volume measured using the level change method (Equation 11). If the percent difference between the two volumes is within ± 2 percent or less than the 90 percent confidence interval computed earlier, then the discharge volumes will be considered consistent (i.e., operator error in reading the tape measure is negligible). If significant differences are measured, then additional measurements data will be collected to compute $Vol_{disch,i}$. In this case, three additional discharge occurrences will be monitored. The average of six liquid changes will be used to compute $Vol_{disch,i}$, and if a comparison with the direct water measurement approach differs by more than 2 percent, the direct measurement approach will be used to compute $F_i$ and reconcile the DQOs. This check will not be performed for the condensate stream because of health affects associated with dumping this product in open containers.

#### 2.6.2.1 Liquid Sampling

Wastewater samples will be collected immediately after every third discharge event. Condensed hydrocarbon samples will be collected after every discharge event. This sampling interval will enable a minimum of three liquid samples to be collected from each stream per run. It will also allow 90 percent confidence intervals to be computed on the average concentration. To facilitate sample collection, the site will install traps in the pipes used to route the liquids to storage tanks. The traps will be located in the appropriate pipeline downstream from the liquid removal Vacuum Separator (Figure 2-1). Both traps will be equipped with sample collection petcocks. Similar to the glycol sampling, at least one duplicate sample per test run will be collected.

The liquid collected in the traps after each process discharge event is approximately 12 fluid ounces. As shown in Section 2.6.2, the anticipated discharge volumes are approximately 1.89 gallons per event. Each time a discharge event occurs, sufficient purging of the trap occurs prior to sample collection. Representative samples for the last discharge event are then collected from the traps in 40 ml VOAs. The vials will be filled to overflowing with liquids, then tightly capped and labeled. Sample collection will be documented on log forms (Appendix A-4), and samples will be identified on chain of custody forms (Appendix A-6). The samples will be stored in coolers with ice before and during shipping to Enthalpy Analytical Laboratory for HAP analysis.

#### 2.6.2.2 Liquid Analysis

Analytical procedures for the hydrocarbon condensate samples will be the same as the procedures detailed in Section 2.6.1.2 for analysis of glycol samples (i.e., direct injection GC/FID after dilution with methylene chloride).

For wastewater and condensate samples, the sample preparation procedure is slightly different. Rather than dilute the samples with appropriate levels of methylene chloride, purge-trap gas chromatography/ flame ionization detector (GC/FID) procedures will be used. This analysis will follow the guidelines specified in SW-846 Method 5030B *Purge-And-Trap For Aqueous Samples*. An appropriate volume (up to 5-mL) aliquot of each sample will be sparged using an OI model 4420 purge and trap. Nitrogen will be sparged through the aliquot at 40 mL/min for 4.00 minutes to remove the hydrophobic compounds from the water. The compounds will then be collected on a trap containing charcoal and Tenax. The trap will be desorbed at 180°C for 6.50 minutes. The organics are released from the trap and collected on the head of the analytical column. After the full desorption period, the flow through the trap will be reversed to clean residuals from the adsorbent for 4.00 minutes.

After desorption and using the same analytical procedures used for the hydrocarbon and glycol samples, the samples will then be analyzed by direct injection into the GC/FID to determine BTEX and n-Hexane concentrations. An example analytical report is provided in Appendix A-8.

#### 2.6.3 BTEX in Makeup Natural Gas Stream

Should the QLD technology not generate enough fuel gas to meet the heat input needs of the reboiler, supplemental (or make-up) gas from the pipeline will be directed to the burners. The amount of BTEX entering in this gas stream is expected to be small (< 300 ppm or 0.002 lb/hr), and will not significantly effect HAP destruction efficiency.

Prior to verification testing, three natural gas samples will be collected from the makeup gas stream. The samples will be shipped to Core Laboratories for compositional analysis. If preliminary testing indicates BTEX levels in the natural gas is greater than 10,000 ppm, samples will be collected during verification testing. Three natural gas samples will be collected per test run. Measured BTEX concentrations will be used in conjunction with the makeup gas flow rate data (discussed in Section 2.4) to determine the amount of BTEX entering the reboiler that is attributable to the makeup gas. The following sections discuss the gas sampling and analysis approach.

##### 2.6.3.1 Gas Sampling

Gas samples will be collected from an access port in the makeup gas fuel line. Samples will be manually collected in stainless steel canisters provided by the analytical laboratory – Core Laboratories, Inc. of Houston, Texas. The canisters are pre-evacuated 600 ml vessels with valves on the inlet and outlet sides. Prior to sample collection, canister pressure will be checked using a vacuum gauge to document that the canisters are under vacuum and are therefore leak free. Condensation of moisture or hydrocarbons in the canister after sample collection can cause a low bias on BTEX analysis (GRI 1995). Maintaining a vacuum in the canister at all times minimizes the possibility of condensation in the canister. Therefore, a vacuum of at least 5 inches Hg will be left on each gas sample during collection. Canisters that are not fully evacuated upon receipt from the laboratory will not be used for testing. During testing, the connections between the canisters and the fuel sampling port will be screened with a hand-held hydrocarbon analyzer or screening soap to check for leaks in the system. Leaks will be corrected prior to sampling. Appendix A-9 contains sampling log and chain of custody forms. Collected samples will be shipped to Core Laboratories for analysis.

##### 2.6.3.2 Gas Analysis

Gas compositional analysis for BTEX will be conducted at Core Laboratories in accordance with Gas Processors Association (GPA) Method 2286. During analysis, sample gas is heated to the gas

temperature recorded during collection and injected into a gas chromatograph (GC) equipped with a molecular sieve column and a thermal conductivity detector. Components are physically separated on the columns and the resultant areas under the chart trace are determined for each compound. These areas are compared to the areas of the same compounds contained in a calibration reference standard that is analyzed under identical conditions. The reference standard areas are used to determine instrument response factors for each compound, and these factors are used to calculate the component concentrations in the sample.

Consistent with the calibration procedures specified in the method, analytical response factors for each compound are established by analyzing a certified calibration reference standard under identical conditions. An HP 339611 integrator acquires the analysis data. The instrument is calibrated prior to each gas sample analysis with a reference standard. During calibrations, the analytical response factors generated for each compound analyzed are programmed into the instrument. Instrument accuracy is ± 0.1 percent of full scale, but allowable method error during calibration is ± 5 percent of the reference value of each gas component. The instrument is re-calibrated whenever its performance is outside of the acceptable calibration limit of ± 5 percent. Calibration records will be obtained and reviewed by the GHG Center. Records of the gas calibration standards will also be obtained and reviewed.

Each gas sample submitted to the laboratory will be analyzed in duplicates. The results must agree within ± 5 percent of each other.

# 3.0 DATA QUALITY

## 3.1 BACKGROUND

Verifications conducted by the GHG Center employ methodologies and instruments, selected to ensure that a stated level of data quality occurs in the final results. Data Quality Objectives (DQO) specify the stated level of quality selected for verification parameters and these DQOs are specified before testing commences.

Each measurement that contributes to the determination of a verification parameter has stated data quality indicators (DQIs) which, if met, ensure achievement of that parameter's DQO. The process of establishing DQOs begins with determining the desired level of confidence in the verification parameters. The next step is to identify all measured values which affect the verification parameter, and determine the levels of error which can be tolerated. The DQI goals, most often stated in terms of measurement accuracy, precision, and completeness, help determine if the stated DQOs were satisfied, and to reconcile the actual error achieved for the verification parameter.

Table 3-1 summarizes the DQOs for each verification parameter. The allowable errors for sales flow rate, sales gas moisture content, glycol circulation rate, and makeup natural gas are specified based on the accuracy specified by the manufacturer. The DQOs for stack emission measurements are based on errors associated with EPA Reference Methods. Sections 3.2.3 through 3.4 discuss the data quality assessment process and determination of actual errors encountered during verification testing.

**Table 3-1. Data Quality Objectives**

| Verification Parameter | Allowable Error |
|---|---|
| **Sales Gas** | |
| Flow Rate (MMscfd) | ± 1 % |
| Moisture Content (lb/MMscf) | ± 5 % |
| **Glycol Circulation Rate** (gpm) | ± 1 % |
| Makeup Gas | |
| Natural Gas Flow Rate (scfh) | ± 1 % |
| BTEX in natural Gas (ppm) | ± 5 % |
| **Stack Emissions** | |
| Concentration (ppm) | |
| $NO_X$ | ± 2 % FS (FS = 500 ppm) |
| CO | ± 2 % FS (FS = 500 ppm) |
| THC | ± 5 % FS (FS = 1,000 ppm) |
| $CO_2$ | ± 2 % FS (FS = 20 %) |
| $CH_4$ | ± 5 % FS (FS = 1,000 ppm) |
| BTEX | ± 5 % FS (FS = 500 ppm) |
| n-Hexane | ± 5 % FS (FS = 500 ppm) |
| Emission Rate (lb/hr) | |
| all compounds | ± 7 % |
| **HAP Destruction Efficiency** (% absolute) | ± 0.5 % (for QLD destruction efficiency that is greater than 95 %) |

The ± 0.5 percent error for HAP destruction efficiency is based on measurement errors associated with BTEX and n-Hexane in the rich glycol, lean glycol, and wastewater streams and the reboiler stack gas. Section 3.5 describes the instrument errors and sampling/analysis errors, and how they compound to contribute to destruction efficiency errors. This section concludes with procedures for reconciling the DQOs.

### 3.2 SALES GAS FLOW AND MOISTURE CONTENT

The DQO for sales gas flow rate measurement is to achieve a maximum error of 1 percent in natural gas flow rate and 5 percent error in moisture content. The DQI goals specified to meet this objective are listed in Table 3-2. QA/QC procedures to be followed to assess these goals are summarized in Table 3-4. The flow meter accuracy goal (± 1 percent of reading) will be assessed by a field calibration conducted by a factory representative. The moisture meter accuracy goal (± 5 percent of reading ) will be assessed by obtaining and reviewing the most recent factory calibration records. If the results of these assessments indicate that the DQI goals are achieved, the DQOs will be met. The following paragraphs discuss the data quality procedures.

The host site operates the Emerson orifice gas flow meter on the sales gas line that will be used to document natural gas processed during testing. The meter is routinely calibrated and serviced by a factory representative at 6-month intervals. The site has offered to calibrate the meter just prior to the verification testing by a factory representative. This calibration certificate will be used to verify meter accuracy during the test. During service and calibration, the meter is challenged with reference standards for differential pressure (6-point calibration), static pressure (4-point calibration), and temperature (1 point calibration). If any readings or average readings exceed 1 percent of the reference values, the meter is repaired or replaced. Field service also includes inspection of all meter components and repair or replacement where necessary.

For moisture determination, the site uses the MEECO Accupoint2 electrolytic transmitter. The most recently available calibration records from the manufacturer will be reviewed to determine if calibration with NIST-traceable standards resulted in an accuracy of ± 1 percent. Prior to testing, a field check (verification routine) will be conducted on the meter to confirm proper meter function. During the verification routine, the gas flow is adjusted to one-half the normal sampling rate of 10 cc/min, and twice the normal flow. If the meter is functioning properly, the meter's moisture reading should correspond to one-half, and twice the moisture reading obtained during normal operation.

In addition, a reasonableness check will be conducted by collecting two gas samples per day of testing and forwarding the samples to Core Laboratories for moisture analysis. Samples will be collected in pre-evacuated stainless steel canisters. At the laboratory, moisture content in the gas samples will be determined using ASTM D4888-88 (1999) Standard Test Method for Water Vapor in Natural Gas Using Length-of-Stain Detector Tubes. During analysis, a known volume of gas is injected into a graduated glass tube filled with indicating desiccant. The length of stain (color change) of the desiccant is proportional to the volume of moisture in the gas sample as indicated on the tube graduations. Accuracy of the ASTM procedure is approximately 20 percent of reading, and the tubes are sensitive to 0.1 mg $H_20$/liter gas. Laboratory results for moisture content in the gas should agree with the Accupoint readings within 21 percent.

### 3.3 GLYCOL CIRCULATION RATE

The data quality objective for glycol circulation rate is to achieve a maximum error of 1 percent. The Halliburton turbine fluid meter, used by the site to monitor glycol flow, will be used. This meter has a

factory certified accuracy of ± 1 percent of reading, which is defined as the DQI goal for the turbine meter. During factory calibration, the meter is programmed with a fluid-specific calibration factor (triethylene glycol in this case), and calibrated at five points in the operating range using a piston-type volume prover. This calibration certificate will be the primary means of assessing the accuracy goal. If the meter is certified to be ± 1 percent, issued just prior to testing, the DQO for glycol circulation rate will be met.

In the field, the Field Team Leader will conduct on-site independent checks of the Haliburton turbine meter using a portable ultrasonic fluid flow meter. A Controlotron Model 1010EP1 energy meter with a certified accuracy of ± 1 percent relative to NIST-traceable standard, will be used. This meter is a digitally integrated system that includes a portable computer and ultrasonic fluid flow transmitters. The flow transducers are surface mounted units that operate on an ultrasonic transit-time principle. They have a rated sensitivity of 0.001 feet per second (fps) and repeatability of 0.25 percent. Transit-time signals are reported to the flow computer at intervals in the millisecond range and converted in the computer to fluid velocity.

The ultrasonic transducers will be mounted on the pipe at a Location with appropriate lengths of undisturbed upstream and downstream pipe run (at least ten diameters upstream and five diameters downstream is ideal). Flow readings will then be compared to the turbine meter and the differences reported. Differences exceeding ± 2 percent of reading will be investigated, and repairs made where needed.

To operate the ultrasonic flow meter, several parameters will be programmed into the computer including the following:

- pipe diameter
- pipe wall material and thickness
- distances between ultrasonic transducers
- working fluid density and specific heat

The accuracy of these parameters will directly impact the overall accuracy of the readings obtained with the ultrasonic meter. Pipe material and exact pipe diameter and pipe wall thickness will be obtained from manufacturer specifications. The transducer mounting system is designed to provide precise measurement of the distance between transducers. The energy meter software contains lookup tables that provide the ASHRAE working fluid density and specific heat values. Values for TEG mixed with water will be specified.

## Table 3-2. Measurement Instrument Specifications and DQI Goals

| Site Measurements | | | | | | | Data Quality Indicator Goals | | |
|---|---|---|---|---|---|---|---|---|---|
| **Measurement Variable** | | **Operating Range Expected in Field** | **Instrument Type / Manufacturer/Method** | **Instrument Range** | **Instrument Rated Accuracy** | **Frequency of Measurements** | **Accuracy[a]** | **Completeness** | **How Verified / Determined[c]** |
| Sales Gas Quality and Production Rate | Gas Flow Rate[b] | 1 MMscfh | Emerson Model MVS205 orifice meter | 0 to 2 MMscfh | ± 1 % reading | 1-min averages during test period | ± 1 % reading | 90 % of 1-min average readings | Review manufacturer's recent field calibration |
| | Gas Moisture Content | 0 to 7 lbs/MMscf | MEECO Accupoint2 electrolytic transmitter | 0 to 20 lbs/MMscf | ± 5 % reading | | ± 21 % reading | | Review manufacturer's recent factory calibration, field functionality test, reasonableness check |
| Process Glycol Circulation Rate | Lean Glycol Flow Rate | 3 to 5 gpm | Halliburton MC-II turbine meter | 2 to 15 gpm | ± 1 % reading | | ± 1 % reading | | Review manufacturer's factory calibration, comparison with independent meter in field |
| Glycol Water Content | | 0 to 7 % | Karl Fisher titration | unlimited | ± 10 % reading | 3 samples per test run | ± 10 % precision | 100 % of samples collected | Duplicate titrations |
| Makeup Gas | Natural Gas Flow Rate | 100 to 166 scfh | Halliburton MC-II EXP turbine meter | 0 to 600 scfh | ± 1 % reading | 1-min averages during test period | ± 1 % reading | 90 % of 1-min average readings | Review recent manufacturer's factory calibration |
| | Natural Gas BTEX Content | 0 to 10,000 ppm | GC / FID HP Model 5890 or equivalent | 0 to 10,000 ppm | ± 0.1 % FS (FS = 10,000 ppm) | If preliminary measurements indicate concentration > 10,000 ppm, 3 samples per test run | ± 5 % accuracy | 100 % | Calibration with reference standards |
| | | | | | | | ± 5 % precision | | Duplicate analyses |
| HAPs in Liquid Streams | BTEX and n-Hexane concentration in rich and lean glycol, water, and condensed hydrocarbons | 0 to 1,000 ppm | GC / FID HP Model 5890 or equivalent | 0 to 1,000 ppm | ± 0.1 % FS (FS = 1,000 ppm) | 3 samples per test run | ± 5 % accuracy | 100 % of samples collected | Calibration with reference standards |
| | | | | | | | ± 5 % precision | | Duplicate analyses |
| | Water and Condensate Production Rates | 10 to 15 gal/hr water, 3 to 5 gal/hr condensates | Event counter to log batch discharge occurrences | n/a | n/a | Every discharge event occurring during test run | ± 5 % reading | Log 100 % of discharge events during test run | Triplicate measurement of discharge volumes to obtain average amount of liquid discharged per event, compare by dumping wastewater in liquid containers |

(continued)

**Table 3-2. Measurement Instrument Specifications and DQI Goals** (continued)

| Site Measurements | | | | | | | Data Quality Indicator Goals | | |
|---|---|---|---|---|---|---|---|---|---|
| **Measurement Variable** | | **Operating Range Expected in Field** | **Instrument Type / Manufacturer/Method** | **Instrument Range** | **Instrument Rated Accuracy** | **Frequency of Measurements** | **Accuracy[a]** | **Completeness** | **How Verified / Determined[c]** |
| Ambient Conditions | Ambient Temperature | 30 to 90 °F | Vaisala HMD YO | -40 to 140 °F | ± 1.08 °F | 1-min average | ± 1.08 °F | 90 % of 1-min average readings | Review manufacturer's calibration certificates |
| | Barometric Pressure | 28 to 31 in. Hg | Setra Model 280E | 0 to 51 in. Hg | ± 0.11 FS | | ± 0.11 % FS | | |

FS: full-scale
n/a: not applicable
[a] Accuracy goal represents the maximum error expected at the operating range. It is defined as the sum of instrument and sampling errors.
[b] Includes Emerson-supplied temperature sensors.
[c] For a full description, see Table 3-4.

**Table 3-3. Instrument Specifications and DQI Goals for Stack Emissions Testing**

| | | Instrument Specifications | | | Data Quality Indicators | | |
|---|---|---|---|---|---|---|---|
| **Measurement Variable** | | **Instrument Type , Manufacturer, or Method** | **Instrument Accuracy** | **Frequency of Measurements** | **Overall System Accuracy** | **Completeness** | **How Verified / Determined[a]** |
| Reboiler Burner Emissions | $NO_X$ Levels | Chemilumenescense, (Monitor Labs 8840 or equivalent) | ± 1 % FS (FS = 100 ppm) | 1-minute averages (DAS polls analyzer outputs at 5-second intervals) | ± 2 % FS (includes sampling system bias corrections) | 100 % (3 valid runs) | Follow EPA Method calibration and system performance check criteria |
| | CO Levels | NDIR analyzer, (California CA-300P or equivalent) | ± 1 % FS (FS = 100 ppm) | | ± 2 % FS (includes sampling system bias corrections) | | |
| | THC Levels | FID / California 300 AD or equivalent | ± 1 % FS (FS = 100 ppm) | | ± 5 % FS | | |
| | $CO_2$ / $O_2$ Levels; Stack Gas Molecular Weight | NDIR ($CO_2$) / paramagnetic or equivalent ($O_2$) | ± 0.5 FS (FS = 20 % for $CO_2$ / 25 % for $O_2$) | | ± 2 % FS (includes sampling system bias corrections) | | |
| | $CH_4$ Levels | GC / FID HP Model 5890 or equivalent | ± 0.1 % FS (FS = 50 ppm) | Once per test run | ± 5 % FS | | |
| | BTEX and n-Hexane Levels | | | | | | |
| | $H_2O$ content | Gravimetric / NA | ± 0.2 % FS (FS = 100 %) | | ± 5 % FS | | |
| | Stack Gas Flow Rate | Thermocouple | n/a | | ± 5 % FS | | |

[a] For a full description, see Table 3-4.

### 3.4 MAKEUP NATURAL GAS

The DQO for makeup gas flow rate measurement is to achieve a maximum error of 1 percent. A brand new Haliburton flow meter will be installed at the site. The meter will be calibrated by the manufacturer using a NIST traceable volume prover. A five point calibration curve in the operating range of the test site will be generated. The GHG Center will obtain these calibration records, and review to ensure the ± 1 percent goal was met.

The DQO for BTEX analysis of makeup natural gas is to achieve a maximum error of 5 percent. As discussed in Section 2.6.3, the GC/FID will be calibrated prior to analysis of each gas sample. Duplicate injections of certified calibration gas must result in agreement of ± 5 percent. In addition, each sample will be prepared and analyzed in duplicates to determine total measurement error. The percent difference between the two results for an identical gas sample must be within ± 5 percent. Using the absolute percent difference in each duplicate result, a 90 percent confidence interval will be computed. This value will represent the actual error achieved in concentration measurements.

### 3.5 REBOILER STACK EMISSION RATES

EPA Reference Methods, listed earlier in Table 2-2, will be used to quantify emission rates of criteria pollutants and greenhouse gases. The Reference Methods clearly specify the sampling methods, calibration methods, and data quality checks that must be followed to achieve a data set that meets required data quality goals. These Methods ensure that run-specific quantification of instrument and sampling system drift and accuracy occurs, and that runs are repeated if specific performance goals are not met. Based on the requirements of the Reference Methods, the DQOs for concentration measurements are ± 2 percent for $NO_X$, $CO_2$, and ± 5 percent for THC, $CH_4$, BTEX, and n-Hexane. The data quality indicator goals (DQIs) required to meet the DQO for $NO_X$, $CO_2$, CO, and THC measurements will consist of assessing the sampling system accuracy, precision, and drift (Table 3-3). The DQIs required to meet the DQO for $CH_4$, BTEX, and n-Hexane measurements will consist of calibration of laboratory instrumentation and duplicate sample analyses (Table 3-3).

Assessment of the emissions data quality, integrity, and accuracy will be performed using a series of measurement system calibrations and QC checks. The QC checks required by the EPA Reference Methods vary between methods and are pollutant specific. Table 3-4 lists the QC checks required for each pollutant, the frequency of the calibrations and checks, the maximum allowable result, and the corrective measures for failed checks. Satisfaction and documentation of each of the calibrations and QC checks conducted are used to verify the accuracy and integrity of the measurements with respect to the DQIs listed in Table 3-3, and subsequently the DQOs for each pollutant. QC requirements for each of the measurements are described below. These QC procedures will be used to determine if overall DQOs for emissions (summarized in Table 3-1), are met during the verification.

| Table 3-4. Summary of Calibrations and QC Checks | | | | | |
|---|---|---|---|---|---|
| **Measurement Variable** | | **Calibration/QC Check** | **When Performed/ Frequency** | **Expected or Allowable Result** | **Response to Check Failure or Out of Control Condition** |
| Sales Gas | Flow Rate | Field calibration by manufacturer* | Beginning of test | 6 point calibration for differential pressure, 4 point calibration for static pressure, and 1 point calibration for temperature should be less than 1 % of reference values | Identify cause of any problem and correct, or replace meter |
| | Moisture Content | Factory calibration by manufacturer | Most recently available records | ± 1 % of NIST-traceable calibration standard | |
| | | Field check – adjust sampling rate into moisture meter | Beginning of test | Moisture reading at 50 % and 200 % of normal sampling rate should be 0.5 and 2 times the reading at normal rate | |
| | | Reasonableness check - compare with manually collected gas sample* | 2 samples per day of testing | ± 21 % of lab results | |
| Glycol Circulation Rate | Lean Glycol Flow Rate | Factory calibration by manufacturer* | Beginning of test | ± 1 % of NIST-traceable calibration standard | |
| | | Reasonableness check – compare with ultrasonic meter | Beginning of test | ± 2 % of NIST traceable ultrasonic meter reading | |
| Makeup Gas | Flow Rate | Factory calibration by manufacturer* | Beginning of test | ± 1 % of NIST-traceable calibration standard | |
| | BTEX Content | Calibration of GC/FID with gas standards by certified laboratory* | Prior to analysis | ± 5 % of reference value | Repeat calibration |
| | | Duplicate analysis* | Each sample | ± 5 % difference | Repeat analysis of same sample |
| Reboiler Stack Emission Rates | $NO_X$, CO, $CO_2$, $O_2$ | Analyzer calibration error test | Daily before testing | ± 2 % of analyzer span | Repair or replace analyzer |
| | | System bias checks* | Before each test run | ± 5 % of analyzer span | Correct or repair sampling system |
| | | Calibration drift test | After each test run | ± 3 % of analyzer span | Repeat test |
| | THC | System calibration error test* | Daily before testing | ± 5 % of analyzer span | Correct or repair sampling system |
| | | System calibration drift test | After each test run | ± 3 % of analyzer span | Repeat test |
| | $CH_4$, BTEX, n-Hexane | Duplicate analysis* | Each sample | ± 5 % difference | Repeat analysis of same sample |
| | | Calibration of GC/FID with gas standards by certified laboratory | Prior to analysis of the three samples submitted for this test | ± 5 % for each compound | Repeat calibration |
| | Stack Gas Flow | Thermocouple Calibration | Once after testing | ± 1.5 % of average stack temperature recorded during final test run | Adjust average stack temperatures for all test runs; recalculate stack flow rates |

(continued)

| Table 3-4. Summary of Calibrations and QC Checks (continued) | | | | | |
|---|---|---|---|---|---|
| **Measurement Variable** | | **Calibration/QC Check** | **When Performed/ Frequency** | **Expected or Allowable Result** | **Response to Check Failure or Out of Control Condition** |
| Liquid Measurements | Waste-water and Conden-sate Volume Discharged Per Event | Monitor change in liquid level for 3 discharge occurrences, compare calculated discharge volume per event with volume of wastewater collected in liquid containers | Beginning of test | ± 2 % difference | Repeat comparison with 3 additional discharges, use 90 % confidence interval in direct volume measurements to report error achieved |
| | HAP Content | Calibration of GC/FID with gas standards by certified laboratory | Prior to analysis | ± 5 % of reference value | Repeat calibration |
| | | Duplicate analysis* | Each sample | ± 5 % difference | Repeat analysis of same sample |
| | | 3 benzene audit samples | Prior to analysis | ± 5 % of certified concentration | Repeat analysis |
| | | Comparison with internal standard* | 3 liquid samples | ± 5 % of spike levels | Repeat analysis of same sample |
| * Results of these checks will be used to reconcile data quality indicators | | | | | |

All of the procedures listed in Table 3-4 are detailed in the corresponding Reference Methods and will not be repeated here in their entirety. However, the specific procedures to be conducted during this these calibration and quality control checks are outlined below.

$NO_2$ Converter Efficiency Test

The $NO_X$ analyzer converts any $NO_2$ present in the gas stream to NO prior to gas analysis. An efficiency test on the converter must be conducted prior to beginning the testing. This procedure is conducted by introducing a mixture of mid-level calibration gas and air to the analyzer. The analyzer response is recorded every minute for 30 minutes. If the $NO_2$ to NO conversion is 100 percent efficient, the response will be stable at the highest peak value observed. If the response decreases by more than 2 percent from the peak value observed during the 30-minute test period, the converter is faulty. If the $NO_X$ analyzer fails the efficiency test, it will be either repaired or replaced prior to testing.

Calibration Error, System Bias, and Calibration Drift Tests

These calibrations will be conducted to verify accuracy of $NO_X$, CO, $CO_2$, and $O_2$ measurements. The calibration error test is conducted at the beginning of each day of testing. A suite of calibration gases is introduced directly to each analyzer and the analyzer responses are recorded. EPA Protocol 1 calibration gases must be used for these calibrations. Three gases will be used for $NO_X$, $CO_2$, and $O_2$ including zero, 40 to 60 percent of span, and 80 to 100 percent of span. Four gases will be used for CO including zero and approximately 30, 60, and 90 percent of span. The maximum allowable error in monitor response to any of the calibration gases is ± 2 percent of span.

Before and after each test, the zero and mid-level calibration gases will be introduced to the sampling system at the probe and the response recorded. System bias will then be calculated by comparing the responses to the calibration error responses recorded earlier. System bias must be less than ± 5 percent of

span for each parameter for the sampling system to be acceptable. The pre- and post-test system bias calibrations will also be used to calculate drift for each monitor. Drifts in excess of ± 3 percent will be considered unacceptable and will warrant repeating the test.

THC Sampling System Calibration Error and Drift Tests

For THC testing, a sampling system calibration error test must be conducted prior to the start of the first test on each day of testing. This calibration is conducted by sequentially introducing a suite of calibration gases to the sampling system at the sampling probe, and recording the system response. Calibrations will be conducted using Protocol No. 1 calibration gases. Four calibration gases of $CH_4$ in air are required including zero, 20 to 30 percent of span, 40 to 60 percent of span, and 80 to 90 percent of span. The maximum allowable error in response to any of the calibration gases is ± 5 percent of span for THC.

At the conclusion of each test the zero and mid-level calibration gases are again introduced to the sampling system at the probe and the response is recorded. System response is compared to the initial calibration error to determine sampling system drift. Drifts in excess of ± 3 percent are unacceptable and the test will be repeated.

Instrumental Analyzer Data Completeness and Reasonableness Checks

The GHG Field Team Leader will review the chart traces (or a line chart representation of the DAS digital file) for each instrumental analyzer at the completion of each test run. The data must be reasonable and complete for each analyzer. Some criteria are:

- The trace must fall entirely within the boundaries of the instrument span; no flattened peaks at high concentrations.
- The trace must move smoothly and continuously from concentration to concentration; no abrupt steps or extended flat lines (periods with no concentration changes).
- The data must be 100 percent complete defined as no gaps in the chart trace for each analyte.

The GHG Field Team Leader will initial each day's chart. For digital DAS, he will obtain a disk copy of the data file and make the appropriate entry in the test log book.

GC/FID Calibration

Methane, BTEX, and n-Hexane samples will be collected and analyzed using a GC/FID following the guidelines of EPA Method 18. The GC/FID will be calibrated prior to sample analysis using certified standards for each component ($CH_4$, individual BTEX compounds, and n-Hexane). The accuracy of the analysis is ± 5 percent. Each analysis includes the following quality assurance procedures outlined in Section 40 CFR, Part 60, Appendix A, Method 18, Section 7.4.4-Quality Assurance: Duplicate injection of each sample aliquot with agreement of all injections to within 5 percent of the mean; three point calibration curves based on least-squares regression analysis; calibration curves developed prior to analysis; and agreement of all calibration points with the theoretical value to within 5 percent. After all samples have been analyzed, a mid-point calibration will be performed in triplicate. If the as-analyzed value for any compound detected in the test program does not agree within ± 5 percent of its pretest value, then a full post-test curve will be generated and all concentrations will be based upon the average of the pre- and post-test calibration points.

Volumetric Flow Rate

Determination of stack gas flow rate includes measurement of exhaust gas concentrations of $O_2$, $CO_2$, and $H_2O$, velocity (differential pressure across a pitot tube), and gas temperature. The GHG Field Team Leader will review $O_2$ and $CO_2$ instrumental analyzer data at the end of each test day. Review criteria will be as described previously for the instrumental analyzers. Stack gas moisture field data will also be reviewed to ensure proper procedures were followed (EPA Method 4).

Following Method 2C, a standard pitot will be assigned an accuracy coefficient of 0.99. Also in accordance with Method 2 calibration criteria, they will perform pre- and post-test thermocouple calibrations by subjecting the thermocouples used during testing to the average temperature found during testing and comparing the readings to a NIST-traceable reference thermometer. For acceptable results, the thermocouple reading must be within 1.5 percent of the reference thermometer. Details on thermocouple calibration are referenced in 40CFR60 Method 2, Section 10.3.1.

These calibrations will provide documentation that the accuracy of each of the individual measurements conformed to Reference Method specifications. Knowing this, an overall uncertainty of ± 5 percent of reading is assigned for stack gas volumetric flow rate, based on propagation of the sum of the squares of the individual measurement errors (Shigehara et. al. 1970).

Determination of mass flow rate for each pollutant in the stack is a multiplicative function of the concentration measurement and the exhaust stack flow rate. With two multiplied values, an estimate of the compounded error, as shown in Equation 12 (Skog 1982):

$$err_{c,rel} = \sqrt{\left(\frac{err_1}{value_1}\right)^2 + \left(\frac{err_2}{value_2}\right)^2} \qquad \text{(Eqn. 12)}$$

Where:
- $err_{c,rel}$ = Compounded error, relative
- $err_1$ = Error in first multiplied value, absolute value
- $err_2$ = Error in second multiplied value, absolute value
- $value_1$ = First multiplied value
- $value_2$ = Second multiplied value

For BTEX, the target error for concentration measurement error is expected to be ± 5 percent and stack flow rate error is also ± 5 percent. The compounded error in mass flow rate is ± 7 percent, as shown in the following example calculation. This is the DQO for BTEX mass flow rate in the exhaust stack. It will be reconciled using actual measurement errors per the QA/QC procedures discussed earlier.

$$Error\ in\ BTEX_{vented} = \sqrt{(0.05)^2 + (0.05)^2} = 0.07$$

### 3.6 HAP DESTRUCTION EFFICIENCY

HAP destruction efficiency is defined as the difference between the HAPs contained in all input and output streams divided by the HAPs contained in all input streams (Equation 3). Table 3-5 illustrates an example calculation, concentration, and flow rate data for each stream (a total of 10 separate measurements). As shown in Table 3-5, destruction efficiency is expected to be about 97 percent.

| Table 3-5. Destruction Efficiency Error Determination | | | | | | |
|---|---|---|---|---|---|---|
| **Verification Parameter** | **Expected Results** | | | | **Expected Errors (Relative)** | |
| HAPs in Rich and Lean Glycol Stream | Flow Rate | gal/hr | 300 | QLD design circulation rate | ± 1 % | Accuracy of turbine meter |
| | Concentration in Rich Glycol | mg/l | 11,800 | Assumes 454 mg/l is absorbed per MMscfd gas[a] | ± 5 % | Liquid analysis error |
| | Concentration in Lean Glycol | mg/l | 510 | Assumes 1.7 mg/l BTEX remains per gallon glycol circulated [a] | ± 5 % | Liquid analysis error |
| | **$HAP_{in}$** | **lb/hr** | **28.27** | Flow rate times concentration difference | **± 5.3 %** | Error propagation for multiplication and subtraction functions |
| HAPs in Water | $Vol_{disch,water}$ | gal/event | 1.89 | Equation 11, assumes controller discharges at 1.5 in. change in tank level | ± 2 % | Percent difference between visual level change method and direct discharge in container |
| | Flow Rate | gal/hr | 13.22 | Equation 10, assumes 7 discharge events in 1 hour | ± 2 % | Assigned same as above |
| | Concentration | mg/l | 700 | Solubility of benzene in water (Perry 1984) | ± 5 % | Liquid analysis error |
| | **$HAP_{water}$** | **lb/hr** | **0.08** | Equation 8 | **± 5.4 %** | Error propagation for multiplication function |
| HAPs in Condensate | $Vol_{disch,condensate}$ | gal/event | 1.89 | Equation 11, assumes controller discharges at 1.5 in. change in tank level | ± 2 % | Percent difference in visual level change method |
| | Flow Rate | gal/hr | 3.78 | Equation 10, assumes 2 discharge events/hr | ± 2 % | Assigned same as above |
| | Concentration | mg/l | 817,487 | Assumes BTEX is 72 % (by weight) based on GRI Glycalc estimates prepared by ECL | ± 5 % | Liquid analysis error |
| | **$HAP_{condensate}$** | **lb/hr** | **25.77** | Equation 9 | **± 5.4 %** | Error propagation for multiplication function |
| HAPs Vented from Burner Stack | Flow Rate | lb mol/hr | 21.49 | Assumes 800,000 Btu burner-fired at 20 % excess air and 3.32 % $O_2$ | ± 5 % | Method 2 |
| | Concentration | ppm | 440.40 | Assumes 98 % of BTEX entering burner is combusted | ± 5 % | Method 18 |
| | **$HAP_{vented}$** | **lb/hr** | **0.74** | Flow rate times concentration divided by molecular weight | **± 7 %** | Error propagation for multiplication function |
| HAP Destruction Efficiency | **DE** | **%** | **97.1** | Equation 3 | **± 8.4 %** (relative) **± 0.24** (absolute %) | Error propagation for addition and division functions |

[a] Based on the ratio of 10 dehydration facilities tested by EPA and GTI (EPA 1995, GTI 1995)
[b] Not used to compute destruction efficiency, because HAPs contained in the condensate products is assigned to be controlled

Table 3-5 also shows how the concentration and flow rate measurements contribute to the overall error in the destruction efficiency. It also summarizes key assumptions made regarding expected flow rates and concentrations. Based on each measurement instrument's errors and liquid sampling/analysis errors (Tables 3-2 and 3-3), the DQO for destruction efficiency is set to be ± 0.5 percent (absolute). The following paragraphs discuss the derivation of this DQO, and how it will be reconciled.

The amount of net HAPs entering the system is the difference between HAPs in the rich glycol stream and the lean glycol stream. Since the rich and lean glycol flow rates are defined to be equivalent, error propagation of total HAPs entering the system consists of a multiplication function and a subtraction function [i.e., net $HAP_{in} = F_{glycol} (C_{rich} - C_{lean})$]. The compounded error associated with the multiplication

function can be propagated according to Equation 12. For subtraction errors, the absolute errors in concentration measurements compound as follows (EPA 1999):

$$err_{c,abs} = \sqrt{err_1^{\ 2} + err_2^{\ 2}} \qquad \text{(Eqn. 13)}$$

Relative error, then, is:

$$err_{c,rel} = \frac{err_{c,abs}}{Value_1 - Value_2} \qquad \text{(Eqn. 14)}$$

Where:

$err_{c,abs}$ = Compounded error, absolute
$err_1$ = Error in first subtracted value, absolute value
$err_2$ = Error in second subtracted value, absolute value
$err_{c,rel}$ = Compounded error, relative
$value_1$ = First subtracted value
$value_2$ = Second subtracted value

Determination of HAP mass flow rate for water and vent stack is a multplicative function. It represents the flow rate measured by the flow instrument times the concentration determined through laboratory analysis. The compounded error associated with these measurements can be propagated according to Equation 12.

The amount of HAPs exiting the system is an addition function (i.e., $HAP_{out} = HAP_{water} + HAP_{vented}$). For additive errors, the relative errors compound as follows (EPA 1999):

$$err_{c,rel} = \frac{err_{c,abs}}{Value_1 + Value_2} \qquad \text{(Eqn. 15)}$$

Where:

$err_{c,abs}$ = Compounded error, absolute, Equation 13
$err_1$ = Error in first added value, absolute value
$err_2$ = Error in second added value, absolute value
$err_{c,rel}$ = Compounded error, relative
$value_1$ = First added value
$value_2$ = Second added value

HAP destruction efficiency is defined as the amount exiting the system divided by the amount entering the system (Equation 3). An estimate of the compounded error for divided values is the same as the multiplication function (Equation 12).

Using these equations and estimated errors for each measurement (summarized in Table 3-5), the error in destruction efficiency is estimated to 8.4 percent relative (or 0.24 absolute percentage units). This means that if the destruction efficiency is determined to be 97.1 percent, actual value would range from 96.9 to 97.4 percent. The absolute error is relatively small because it varies proportionally to the projected $HAP_{out}/HAP_{in}$ ratio. If the $HAP_{out}$ is higher, corresponding to a DE of the 95 percent MACT limit, the 8.4 percent relative error would correspond to 0.42 absolute percentage units (0.05 times 0.084).

Based on these expectations, the DQO for HAP destruction efficiency is defined to be ± 0.5 percent. After field testing is completed, this DQO will be reconciled using Equations 12 through 14, and actual error achieved during testing.

#### 3.6.1 Concentration Measurements in Liquid Samples

BTEX and n-Hexane concentrations in the rich and lean glycol, water, and condensate samples will be collected and analyzed using the procedures described in Section 2.6. All analyses will be conducted using direct injection GC/FID procedures following the sample preparation procedures described earlier. Each sample will be analyzed in duplicate, and their results must agree within 5 percent of the mean of the two results. Analyses will be repeated when variability exceeds this criteria. Using the absolute percent difference in the duplicate results, a 90 percent confidence interval will be computed. This value will represent the actual error achieved in concentration measurements.

The GC/FID will be calibrated using certified standards for each BTEX compound and n-Hexane (prior to, during, and after sample analysis). Calibration results must meet the following criteria:

- All instrument calibrations shall be considered valid for no more than 24 hours.
- Each calibration shall consist of at least three separate concentration or mass levels distributed over the range covered by the analysis.
- All calibration levels will be analyzed in duplicate with agreement within 5 percent of the mean of the two injections (re-calibration will be conducted when this criteria is exceeded).
- Calibration levels should bracket the concentrations of the samples. If the samples are near or below the limit of quantification (LOQ), the lowest calibration level should be no greater than 5 times the LOQ. If sample concentrations exceed the calibration by greater than 25 percent of the highest calibration point, the range of the calibration must be expanded to include the sample concentration or the samples must be diluted to within the calibration range.
- After all samples have been analyzed, a mid point calibration will be analyzed in duplicate. If the as-analyzed value for any compound detected in the test program does not agree to within ± 5 percent of its pre-test calibration result, then a full post-test curve will be generated and all concentrations will be based upon the average of the pre- and post-test calibration points.
- All calibration points will agree with the predicted response by ± 5 percent.

Section 2.6.1 discussed that results of the rich glycol analyses will be normalized to water content in the rich and lean glycol. To do this, samples will be analyzed for water content using the Karl Fisher titration procedure specified in ASTM D1744. This ASTM method does not specify accuracy or repeatability criteria. However, the laboratory conducting the analysis has an internal Standard Operating Procedure (SOP) for the procedure that specifies a repeatability of ± 10 percent. Each sample is analyzed in duplicats and results must agree within ± 10 percent. If results exceed this value, the analysis is repeated until consecutive results agree within ± 10 percent, and the average result of the two titrations are reported.

Table 3-5 shows HAP concentrations in the rich glycol stream contribute significantly to the mass flow rate determination, which ultimately affects destruction efficiency. For example, a 5 percent error in rich glycol concentration can result in a mass flow rate error of 29.54 ± 1.48 lb/hr. In computing destruction efficiency, the rich glycol stream carries greater mass flow than the other streams (all other streams contain less than 2 lb/hr assuming the QLD destroys/recovers at least 95 percent). Consequently, the error in destruction efficiency is significantly affected by rich glycol measurement errors. Results of the duplicate analyses are the primary means of determining data quality achieved. However, two additional QA/QC measures will be employed to further reduce the uncertainty in rich glycol concentration measurements.

First, three benzene reference standards of known concentration will be submitted to the laboratory along with the samples to serve as blind audits. The standards, manufactured and analyzed by AccuStandard, Inc., will be certified to be within 5 percent of the stated concentration. The three standards will be 0.2, 2, and 20 mg/ml benzene in methanol. This range of standards will bound the range of the expected sample concentrations (after sample dilution by the laboratory). Results of the standards will be used to further evaluate analytical accuracy achieved by the lab during sample analysis.

Secondly, an internal standard will be used by the laboratory to provide a more representative evaluation of analytical accuracy. The internal standard is an organic compound with physical properties similar to BTEX, that is spiked into the samples in precise quantities. A known amount of the internal standard will be added to all rich glycol samples and instrument calibration standards at levels that are similar to those expected for BTEX. Analytical results for the internal standard are then compared to the known spike levels. Results of the internal standard analyses can then be used to identify any inconsistencies in the analytical detection (FID) or sample injection procedures. Results of the internal standard analyses will be incorporated with duplicate analyses results, and a 90 percent confidence interval will be computed on all the percent difference values (i.e., the difference between duplicate results and the difference between the known concentration of the internal standard and the reported value). This will be reported as the actual error achieved in HAP concentration measurements. The use of an internal standard should improve the overall accuracy of the concentration measurements. The laboratory cannot quote an exact overall uncertainty until analytical results are evaluated, but the error in these measurements are expected to be slightly better than the ± 5 percent stated in Table 3-2.

### 3.7 INSTRUMENT TESTING, INSPECTION, AND MAINTENANCE REQUIREMENTS

The equipment used to collect verification data will be subject to the pre- and post-test QC checks discussed earlier. Before the equipment leaves the GHG Center, emissions testing contractor laboratories, or analytical laboratories, it will be assembled exactly as anticipated to be used in the field and fully tested for functionality. For example, all pumps, controllers, flow meters, computers, instruments, and other sub-components of the entire stack testing measurement system will be operated and calibrated as required by the reference methods. Any faulty sub-components will be repaired or replaced before being transported to the test site. A small amount of consumables and frequently needed spare parts will be maintained at the test site. Major sub-component failures will be handled on a case-by-case basis (e.g., by renting replacement equipment or buying replacement parts). Instruments supplied by the host site will be operating prior to testing.

### 3.8 INSPECTION/ACCEPTANCE OF SUPPLIES AND CONSUMABLES

EPA Protocol gases will be used to calibrate the gaseous pollutant measurement system. Calibration gas concentrations meeting the levels stated in Section 2.5 will be generated from high concentration gases for each target compound using a dilution system. Per EPA Protocol gas specifications, actual concentration must be within ± 2 percent of the certified tag value. Copies of the EPA Protocol gas certifications will be available on site.

Certified reference standards are used by the laboratory to calibrate the GC/FID used to determine methane, BTEX, and n-Hexane concentrations in the liquid samples. The laboratory will use a series of these standards to conduct the multipoint instrument calibrations. Each standard contains known levels of BTEX and n-Hexane (each compound individually), and are certified to an accuracy of ± 2 percent by the standard manufacturer. Copies of the standard certifications will be obtained from the lab and maintained at the GHG Center.

# 4.0 DATA ACQUISITION, VALIDATION, AND REPORTING

## 4.1 DATA ACQUISITION AND STORAGE

Test personnel will acquire the following types of data during the verification:

- Continuous process measurements including sales gas flow, sales gas moisture, makeup gas flow, glycol circulation rate (to be collected by the test facility control system)
- Wastewater and hydrocarbon condensates discharge event data (collected by the Field Team Leader)
- HAP concentration data (from samples collected by the Field Team Leader on the makeup gas, rich glycol, lean glycol, wastewater, and condensate streams, and submitted to Enthalpy Analytical Laboratories or Core Laboratories for analysis)
- Reboiler emissions data including concentrations and mass emission rates for $NO_X$, CO, THC, $CO_2$, $CH_4$, BTEX, and total HAP (to be supplied by the emissions testing contractor)

The Field Team Leader will also take site photographs and maintain a Daily Test Log which includes the dates and times of setup, testing, teardown, and other activities. In addition, the Field Team Leader will submit digital data files, field sampling logs, analytical reports, chain of custody forms, and the Daily Test Log to the Project Manager. The Project Manager will initiate the data review, validation, and calculation process. These submittals will form the basis of the Verification Report which will present data analyses and results in table, chart, or text format as best suited to the data type. The Verification Report's conclusions will be based on the data and the resulting calculations. The GHG Center will archive and store all data in accordance with the GHG Center QMP.

### 4.1.1 Continuous Measurements Data Acquisition

The host facility continuously monitors sales gas flow rate, sales gas moisture content, glycol circulation rate, and for this verification, makeup gas flow to the reboiler. The electronic signals from each meter are directed to the facility control room for display and data storage. The GHG Center Field Team Leader will download all 1-minute test data to a laptop computer. Downloaded data will be copied to floppy disk or CD-ROM disk as soon as practicable after download. The GHG Center will archive the original data files and analysts will employ copies for data manipulations, queries, and presentations.

### 4.1.2 Reboiler Emissions Testing Data

All instrumental analyzers for gaseous pollutant sampling provide analog and/or digital outputs for recording by chart recorders or digital data acquisition systems (DAS). Appendix B-1 provides sample copies of DAS outputs. The testing contractor will extract all analyzer data from the chart traces or DAS as described in the applicable Methods. Generally, a DAS queries each analyses at one-second intervals and compiles a series of 1-minute averages. Data output from the analyzers will be in the form of minute-by-minute averages, and an integrated average value for each test run. Exhaust gas samples collected for determination of $CH_4$ , BTEX, and n-Hexane concentrations will be fully documented on field data logs, and shipped to the laboratory along with completed chain-of-custody records.

Data will be reported for each test run as:

- Minute-by-minute concentration values, percent of span (%), and ppmv
- Integrated average concentration for the run, percent of span (%), and ppmv
- Emission rate, lb/hr

Stack flow field data will be recorded on field data forms. Test operators will sign each form upon completion of each test run and provide a copy to the GHG Center Field Team Leader. The Field Team Leader will enter intermediate calculations, quality notes, and other information in the Daily Test Log. The test contractor will report data for each test run as:

- Average stack gas velocity and standard deviation, ft/sec
- Average stack gas dry molecular weight, lb/lb.mol
- Average stack gas moisture content, % (vol)
- Average stack gas volume, dscf/min, dscf/hr

Upon completion of the field test activities, the emissions contractor will provide the Field Team Leader with copies of calibration records, pre- and post-test checks (i.e., calibration error, system bias, system response time), and test run data prior to departure from the site. The contractor will submit a formal report to the Field Team Leader within three weeks of the completion of testing. The report will describe the test conditions, and document all QA/QC procedures, including copies of calibrations, calibration gas certificates, analytical data for $CH_4$, BTEX, and n-Hexane test results, and test results.

#### 4.1.3 Wastewater and Condensate Flow Data

Wastewater and condensates produced by the QLD technology are pneumatically discharged to storage or disposal tanks in batches. Each discharge event is recorded by the facility using a pneumatic event counter. During the verification period, the Field Team Leader will manually log the time and the event counter readings on log forms (Appendix B-2).

#### 4.1.4 Liquid Sample Analysis Data

Rich glycol, lean glycol, water, and condensate samples will be collected by GHG Center personnel at the intervals previously identified, and sample collection activities will be recorded on data logs (Appendix A-6). Data will be recorded for each sample collected including date and time of collection, sampling location, and sample type.

The laboratory will submit a formal report to the Field Team Leader within two weeks of receipt of the samples. The report will describe the analytical procedures and instrumentation, and document all QA/QC procedures, including copies of calibrations, calibration gas certificates, analytical data for $CH_4$, BTEX, and n-Hexane, and test results.

Original data records will be archived according to GHG Center QMP requirements. Copies of data records will be used to conduct data manipulations, queries, and final reporting.

#### 4.1.5 Makeup Gas Analysis Data

The makeup gas flow rate will be continuously monitored by the facility, and stored in the site's control center computer (Section 4.1.1). These data will be used in conjunction with the BTEX concentrations in the makeup gas to calculate BTEX entering the system. BTEX concentrations will be documented using the sample collection logs completed during testing, sample chain-of-custody records, and laboratory analytical and QA/QC reports. All field logs and notes, and analytical reports will be archived and maintained at the GHG Center.

### 4.2 DATA REVIEW, VALIDATION, AND VERIFICATION

Data review and validation will occur primarily at the following stages:

- On site -- by the Field Team Leader
- Before writing the draft Verification Report -- by the Project Manager
- During QA review of the draft Verification Report and audit of the data -- by the GHG Center QA Manager

Figure 1-3 identifies the individuals who are responsible for data validation and verification.

The Field Team Leader will be able to review, verify, and validate some data (i.e., DAS file data, reasonableness checks) while on site. Other data (i.e., liquid and stack gas HAP analysis results) must be reviewed, verified, and validated after testing has ended. The Project Manager holds overall responsibility for these tasks.

Upon review, all collected data will be classed as valid, suspect, or invalid. The GHG Center will employ the QA/QC criteria discussed in Sections 2.0 and 3.0; and specified in Tables 3-2, 3-3, and 3-4. Review criteria are in the form of factory and on-site calibrations, and laboratory calibration and repeatability determinations.

In general, valid results are based on measurements which meet the specified DQIs and QC checks, that were collected when an instrument was verified as being properly calibrated, and that are consistent with reasonable expectations (e.g., manufacturers' specifications, professional judgement).

The data review process often identifies anomalous data. Test personnel will investigate as many of the outlying or unusual values that are identified in the field as are possible. Anomalous data may be considered suspect if no specific operational cause to invalidate the data is found.

All data, valid, invalid, and suspect, will be included in the Verification Report. However, report conclusions will be based on valid data only and the report will justify the reasons for excluding any data. Suspect data may be included in the analyses, but may be given special treatment as specifically indicated. If the DQI goals cannot be met due to excessive data variability, the Project Manager will decide to either continue the test, collect additional data, or terminate the test and report the data obtained.

The QA Manager reviews and validates the data and the draft Verification Report using the Test Plan and test method procedures. The data review and data audit will be conducted in accordance with the GHG Center's QMP. For example, the QA Manager will randomly select raw data and independently calculate the Performance Verification Parameters dependent on that data. The comparison of these calculations

with the results presented in the draft Report will yield an assessment of the QA/QC procedures employed by the GHG Center.

### 4.3 RECONCILIATION OF DATA QUALITY OBJECTIVES

When data are collected, the Field Team Leader and Project Manager will review them to ensure that they are valid and are consistent with expectations. They will assess the quality of the data in terms of accuracy and completeness as they relate to the stated DQI goals (Tables 3-2 and 3-3). If the test data show that DQI goals were met, then it will be concluded that DQOs were achieved. The GHG Center will assess achievement of DQI goals during field testing because QC checks and calibrations will be performed on site or prior to testing. Other DQIs, such as laboratory analysis repeatability, will be verified after the field tests have been concluded.

### 4.4 ASSESSMENTS AND RESPONSE ACTIONS

The quality of the project and associated data are assessed within the project by the Field Team Leader, Project Manager, QA Manager, GHG Center Director, and technical peer-reviewers. Assessment and oversight of the quality for the project activities are performed through the review of data, audits, and reports by the Project Manager, and independently by the QA Manager.

The effectiveness of implementing the Test Plan is assessed through project reviews, audits, and data quality assessment.

#### 4.4.1 Project reviews

The review of project data and the writing of the Verification Report are the responsibility of the Project Manager, who also is responsible for conducting the first complete assessment of the project. Although the project's data will be reviewed by the project personnel and assessed to determine that the data meet the measurement quality objectives, it is the Project Manager who must assure that overall the project activities meet the measurement and DQOs.

The second review of the project will be performed by the GHG Center Director, who is responsible for ensuring that the project's activities adhere to the requirements of the program and expectations of the stakeholders. The GHG Center Director's review of the project will also include an assessment of the overall project operations to ensure that the Field Team Leader has the equipment, personnel, and resources to complete the project as required, and to deliver data of known and defensible quality.

The third review is that of the QA Manager, who is responsible for assuring that the program management systems are established and functioning as required by the QMP and corporate policy. The QA Manager is the final reviewer within the SRI organization, and is responsible for assuring that QA requirements have been met.

The draft Verification Report will be then reviewed by ECL. This will be followed by a review from the host site and selected members of the oil and gas industry (a minimum of two industry experts). Technically competent persons who are familiar with the technical aspects of the project, but not involved with the project activities, will perform the peer-reviews and provide written comments to the Project Manager on the technical aspects of the project. Further details on project review requirements can be found in the GHG Center's QMP.

The draft Verification Report will then be submitted to EPA QA personnel, and all comments will be addressed by the Project Manager. Following this review, the Verification Report and Statement will undergo various EPA management reviews, including reviews by the APPCD Project Officer, EPA-ORD Laboratory Director, and EPA Technical Editor.

#### 4.4.2 Inspections

Although not planned, inspections may be conducted by the Project Manager or the QA Manager. Inspections assess activities that are considered important or critical to key activities of the project. These critical activities may include, but are not limited to, pre- and post-test calibrations, inspections of the data collection equipment, sample equipment preparation, sample analysis, or data reduction procedures. Inspections would be assessed with respect to the Test Plan or other established methods, and would be documented in the field records. Any inspection results will be reported to the Project Manager and QA Manager. Any deficiencies or problems found during an inspection must be investigated and the results and responses or corrective actions reported in a Corrective Action Report (CAR), shown in Appendix B-4.

#### 4.4.3 Audit of Data Quality

The audit of data quality (ADQ) is an evaluation of the measurement, processing, and evaluation steps to determine if systematic errors have been introduced. During the ADQ, the QA Manager, or designee, will randomly select approximately 10 percent of the data to be followed through analysis and data processing. The scope of the ADQ is to verify that the data handling system is correct, and to assess the quality of the data generated.

As part of the system audit, the ADQ is not an evaluation of the reliability of the data presentation. The review of the data presentation is the responsibility of the Project Manager and the technical peer-reviewer.

### 4.5 DOCUMENTATION AND REPORTS

During the different activities on this project, the documentation and reporting of information to management and project personnel are critical. To insure the complete transfer of information to all parties involved in this project, field test documentation, QC documentation, corrective action/assessment report(s), and the Verification Report will be prepared.

#### 4.5.1 Field Test Documentation

The Field Team Leader will record all important field activities, maintaining a field notebook that documents the activities of the field team each day and any deviations from the schedule, Test Plan, or any other significant event. Any major problems found during testing requiring corrective action will be reported immediately by the Field Team Leader to the Project Manager through a CAR. The Field Team Leader will document this in the project files and report it to the QA Manager. The Field Team Leader will review all data sheets, as described in Sections 2.0 and 3.0, and maintain the required test information in an organized file.

The Project Manager will check the test results with the assistance of the Field Team Leader to determine whether the QA criteria were satisfied. Following this review and confirmation that the appropriate data were collected and DQOs were satisfied, the GHG Center Director will be notified.

Copies of all field test documentation will be submitted to the Project Manager. These copies, original data, reports, notes, and other documents will be stored in the project records, as required by the QMP.

#### 4.5.2 QC Documentation

After the completion of verification test, test data, sampling logs, calibration records, certificates of calibration, and other relevant information will be stored in the project file in the GHG Center's RTP office. Calibration records will include information about the instrument being calibrated, raw calibration data, calibration equations, analyzer identifications, calibration dates, calibration standards used and their traceabilities, calibration equipment, and staff conducting the calibration. These records will be used to prepare the Data Quality section in the Verification Report, and made available to the QA Manager during audits.

#### 4.5.3 Corrective Action and Assessment Reports

A corrective action is the process that occurs when the result of an audit or quality control measurement is shown to be unsatisfactory, as defined by the DQOs or by the measurement objectives for each task. The corrective action process involves the Field Team Leader, Project Manager, and QA Manager. A written Corrective Action Report is required on major corrective actions that deviate from the Test Plan.

Since the tasks of this study involve a validation process to ensure data quality for the technology being verified, predetermined limits for the data acceptability have been established in the measurement and DQOs. Therefore, data determined to deviate from these objectives require evaluation through an immediate corrective action process.

Immediate corrective action responds quickly to improper procedures, indications of malfunctioning equipment, or suspicious data. The Field Team Leader, as a result of calibration checks and internal quality control sample analyses, will most frequently identify the need for such an action. The Project Manager will be notified of the problem immediately, who will take and document appropriate action. The Project Manager is authorized to halt the work if it is determined that a serious problem exists. The Field Team Leader is responsible for implementing corrective actions identified by the Project Manager, and is authorized to implement any procedures to prevent the recurrence of problems.

The results of the ADQ conducted by the QA Manager will be routed to the Project Manager for review, comments, and corrective action and the results documented in the project records. The Project Manager will take any necessary corrective action and respond by addressing the QA Manger's comments in the final Verification Report.

#### 4.5.4 Verification Report and Verification Statement

A draft Verification Report and Statement will be prepared by the Project Manager if possible within 6 weeks of completing the field test. The Verification Report will specifically address the results of the verification parameters identified in the Test Plan.

The Project Manager will submit the draft Verification Report and Statement to the QA Manager and Center Director for review. The final Verification Report will contain a Verification Statement, a 3 to 4 page summary of the ECL's QLD technology, the test strategy used, and the verification results obtained. The Verification Report will summarize the results for each verification parameter discussed in Section 2.0 and will contain sufficient raw data to support findings and allow others to assess data trends, completeness, and quality. Clear statements will be provided which characterize the performance of the

verification parameters identified in Sections 1.0 and 2.0. A preliminary outline of the Verification Report is shown below.

***Preliminary Outline***
***Engineered Concepts QLD Verification Report***

Verification Statement

| | |
|---|---|
| Section 1.0 | ETV Overview |
| | Verification Factors |
| | Technology Description |
| Section 2.0 | Verification Test Design and Approach |
| Section 3.0 | Verification Results and Evaluation |
| Section 4.0 | Data Quality Assessment |
| Section 5.0 | Additional Information Provided by Engineered Concepts (optional) |
| References | |

### 4.6 TRAINING AND QUALIFICATIONS

The GHG Center's Field Team Leader has extensive experience (>15 years) in field testing of air emissions from many types of sources. He is familiar with natural-gas flow measurements from production, processing and transmission stations. He is also familiar with the requirements of all of the test methods, analytical procedures, and standards that will be used in the verification test.

The Project Manager has performed numerous field verifications under the ETV program, and is familiar with requirements mandated by the EPA and GHG Center QMPs. The QA Manager is an independently appointed individual whose responsibility is to ensure the GHG Center's activities are performed according to the EPA approved QMP.

### 4.7 HEALTH AND SAFETY REQUIREMENTS

This section applies to GHG Center personnel only. Other organizations involved in the project have their own health and safety plans that are specific to their roles in the project.

GHG Center staff will comply with all known host, state/local and Federal regulations relating to safety at the test facility. This includes use of personal protective gear (e.g., safety glasses, hard hats, hearing protection, safety toe shoes) as required by the host and completion of site safety orientation (i.e., site hazard awareness, alarms and signals).

## 5.0 REFERENCES


API 1997. *Evaluation of a Petroleum Production Tank Emissions Model*. Publication #4662, American Petroleum Institute, Health and Environmental Sciences Department, Washington, DC. October 1997.

40 CFR 63. *National Emission Standards for Hazardous Air Pollutants: Oil and Natural Gas Production and Natural Gas Transmission and Storage - Final Rule*. Federal Register, 40 CFR Part 63, U.S. Environmental Protection Agency Code of Federal Regulations (CFR), Washington, DC. June 17, 1999.

40 CFR 60. *Standards of Performance for Stationary Gas Turbines.* Federal Register, 40 CFR Part 60, Subpart GG, U.S. Environmental Protection Agency Code of Federal Regulations (CFR), Washington, D.C. 1999.

EPA 1999. *Methane Emissions From the U.S. Petroleum Industry*. EPA-600/R-99-010, Environmental Protection Agency, Office of Research and Development, Research Triangle Park, NC. February, 1999.

EPA 1997. *National Emissions Standards for Hazardous Air Pollutants for Source Categories: Oil and Natural Gas Production and Natural Gas Transmission and Storage – Background Information for Proposed Standards.* EPA-453/R-94-079a, U.S. Environmental Protection Agency, Office of Air Quality Planning and Standards, Research Triangle Park, NC. April 1997.

EPA 1996a. *Methane Emissions From the Natural Gas Industry: Volume 2, Technical Report*. EPA-600/R-96-080b, U.S. Environmental Protection Agency, National Risk Management Research Laboratory, Research Triangle Park, NC. June 1996.

EPA 1996b. *Methane Emissions From the Natural Gas Industry: Volume 1, Executive Summary*. EPA-6.00/R-96-080a, U.S. Environmental Protection Agency, National Risk Management Research Laboratory, Research Triangle Park, NC. June 1996.

EPA 1995. *Glycol Dehydrator BTEX and VOC Emissions Testing Results at Two Units in Texas and Louisiana, Volume II, Appendices*. EPA-600/R-95-046b, U.S. Environmental Protection Agency, Air and Energy Engineering Research Laboratory, Research Triangle Park, NC. March 1995.

GTI 2002. *GRI's Environmental Program in Glycol Dehydration of Natural Gas, www.gastechnology.org/pub/oldcontent/tech/ets/glydehy/glytop.htm,* Gas Technology Institute, Chicago, IL. March 2002.

GTI 1996. *Atmospheric Rich/Lean (ARL) Method for Determining Glycol Dehydrator Emissions*, Gas Technology Institute, Chicago, IL, March 1995.

GTI 1995. *Glycol Dehydrator Emissions: Sampling and Analytical Methods and Estimation Techniques, Volume II, Data Appendices*, Gas Technology Institute, Chicago, IL, March 1995.

GTI 1994. *Preliminary Assessment of Air Toxic Emissions in the Natural Gas Industry, Phase I, Topical Report*. GRI-94/0268, Gas Research Institute, Chicago, IL. 1994.

Perry, Robert. *Perry's Chemical Engineer's Handbook*, Sixth Edition, McGraw-Hill, Inc., 1984.

Shigehara, R.T., Todd, W.F., Smith, W.S., *Significance of Errors in Stack Sampling Measurements*, presented at the annual meeting of the Air Pollution Control Association, St. Louis, MO, 1970.

# APPENDIX A

## Test Procedures and Field Log Forms


**Page**

Appendix A-1. Daily Test Log....A-2
Appendix A-2. Example Exhaust Stack Emissions Data....A-3
Appendix A-3. Glycol Sample Collection Log....A-4
Appendix A-4. Water and Organic Condensate Sampling Log....A-5
Appendix A-5. ARL Method Glycol Sampling Procedure....A-6
Appendix A-6. Water and Condensate Sample Chain-of-Custody Log....A-8
Appendix A-7. Condensate Discharge Event Log....A-9
Appendix A-8. Example BTEX Laboratory Report....A-10
Appendix A-9. Makeup Fuel Gas Sample Collection Log....A-12

## Appendix A-1. Daily Test Log

**DATE**: _____ **PAGE**: _____

| **Time** (use 24-hr.) | **Notes** |
|---|---|
| | |
| | |
| | |
| | |
| | |
| | |
| | |
| | |
| | |
| | |
| | |
| | |
| | |
| | |
| | |
| | |
| | |
| | |
| | |
| | |
| | |
| | |

**SIGNATURE:** _____

## Appendix A-2. Example Exhaust Stack Emissions Data

| Parameter | : NOX25 | : NO25 | : CO | : CO2 | : O2 | : THC |
|---|---|---|---|---|---|---|
| Units | : PPM | : PPM | : PPM | : % | : % | : PPM |
| Date Time | Average | Average | Average | Average | Average | Average |
| 4/2/2001 13:30 | 2.09 | 1.82 | 2.54 | 1.19 | 18.07 | 0.02 |
| 4/2/2001 13:31 | 2.05 | 1.76 | 2.52 | 1.21 | 18.08 | 0.01 |
| 4/2/2001 13:32 | 2.08 | 1.81 | 2.52 | 1.22 | 18.07 | 0.02 |
| 4/2/2001 13:33 | 2.16 | 1.87 | 2.53 | 1.23 | 18.05 | 0.02 |
| 4/2/2001 13:34 | 2.12 | 1.84 | 2.51 | 1.24 | 18.06 | 0 |
| 4/2/2001 13:35 | 2.15 | 1.86 | 2.5 | 1.24 | 18.06 | -0.02 |
| 4/2/2001 13:36 | 2.12 | 1.84 | 2.52 | 1.25 | 18.05 | -0.01 |
| 4/2/2001 13:37 | 2.14 | 1.85 | 2.51 | 1.25 | 18.05 | -0.01 |
| 4/2/2001 13:38 | 2.13 | 1.84 | 2.47 | 1.25 | 18.05 | -0.02 |
| 4/2/2001 13:39 | 2.12 | 1.83 | 2.46 | 1.25 | 18.06 | -0.02 |
| 4/2/2001 13:40 | 2.12 | 1.83 | 2.47 | 1.25 | 18.05 | -0.03 |
| 4/2/2001 13:41 | 2.09 | 1.8 | 2.43 | 1.25 | 18.06 | -0.03 |
| 4/2/2001 13:42 | 2.07 | 1.77 | 2.47 | 1.25 | 18.06 | -0.02 |
| 4/2/2001 13:43 | 2.06 | 1.76 | 2.48 | 1.25 | 18.05 | -0.02 |
| 4/2/2001 13:44 | 2.09 | 1.78 | 2.43 | 1.25 | 18.06 | -0.03 |
| 4/2/2001 13:45 | 2.08 | 1.77 | 2.35 | 1.25 | 18.07 | -0.04 |
| 4/2/2001 13:46 | 2.06 | 1.74 | 2.39 | 1.25 | 18.05 | -0.04 |
| 4/2/2001 13:47 | 2.07 | 1.77 | 2.35 | 1.25 | 18.05 | -0.05 |
| 4/2/2001 13:48 | 2.05 | 1.74 | 2.41 | 1.25 | 18.07 | -0.05 |
| 4/2/2001 13:49 | 2.07 | 1.75 | 2.38 | 1.25 | 18.06 | -0.05 |
| 4/2/2001 13:50 | 2.06 | 1.73 | 2.31 | 1.25 | 18.06 | -0.07 |
| 4/2/2001 13:51 | 2.06 | 1.72 | 2.29 | 1.24 | 18.07 | -0.07 |
| 4/2/2001 13:52 | 2.06 | 1.72 | 2.3 | 1.24 | 18.06 | -0.07 |
| 4/2/2001 13:53 | 2.08 | 1.75 | 2.31 | 1.25 | 18.06 | -0.07 |
| 4/2/2001 13:54 | 2.06 | 1.72 | 2.31 | 1.25 | 18.07 | -0.08 |
| 4/2/2001 13:55 | 2.05 | 1.71 | 2.32 | 1.25 | 18.06 | -0.09 |
| 4/2/2001 13:56 | 2.06 | 1.72 | 2.29 | 1.25 | 18.06 | -0.09 |
| 4/2/2001 13:57 | 2.07 | 1.72 | 2.31 | 1.25 | 18.07 | -0.09 |
| 4/2/2001 13:58 | 2.08 | 1.73 | 2.31 | 1.25 | 18.06 | -0.1 |
| 4/2/2001 13:59 | 2.06 | 1.71 | 2.32 | 1.25 | 18.05 | -0.11 |
| average | 2.09 | 1.78 | 2.41 | 1.24 | 18.06 | -0.04 |

## Appendix A-3. Glycol Sample Collection Log

**IMPORTANT:**
Fill sample bottles per instructions in Appendix A-5.
Do not allow excessive overflow.
Place samples on ice immediately after collection. Keep chilled during shipping

Date:_____ Signature:_____

| Rich Glycol Samples | | | Lean Glycol Samples | | |
|---|---|---|---|---|---|
| 24-hr Time | Sample ID # | Duplicate Sample ID # | 24-hr Time | Sample ID # | Duplicate Sample ID # |
| | | | | | |
| | | | | | |
| | | | | | |
| | | | | | |
| | | | | | |
| | | | | | |
| | | | | | |
| | | | | | |
| | | | | | |
| | | | | | |
| | | | | | |
| | | | | | |
| | | | | | |
| | | | | | |
| | | | | | |
| | | | | | |
| | | | | | |
| | | | | | |
| | | | | | |
| | | | | | |
| | | | | | |
| | | | | | |

**NOTES:** _____

_____

_____

## Appendix A-4. Water and Organic Condensate Sampling Log

Date:_____ Signature:_____

| Produced Water Samples | | | Condensed Hydrocarbon Samples | | |
|---|---|---|---|---|---|
| 24-hr Time | Sample ID # | Duplicate Sample ID # | 24-hr Time | Sample ID # | Duplicate Sample ID # |
| | | | | | |
| | | | | | |
| | | | | | |
| | | | | | |
| | | | | | |
| | | | | | |
| | | | | | |
| | | | | | |
| | | | | | |
| | | | | | |
| | | | | | |
| | | | | | |
| | | | | | |
| | | | | | |
| | | | | | |
| | | | | | |
| | | | | | |
| | | | | | |
| | | | | | |
| | | | | | |
| | | | | | |
| | | | | | |
| | | | | | |

NOTES:_____

# Appendix A-5. ARL Method Glycol Sampling Procedures

### Glycol Sampling System

The glycol stream lines on most glycol dehydration units are generally one-inch pipe and have National Pipe Thread (NPT) fittings. Adapt the identified sample port from the NPT fitting to a 0.25-inch Swagelok male fitting. Connect a sampling coil made from approximately twelve feet of 0.25-inch copper or stainless steel tubing to the 0.25-inch Swagelok sample valve.

**ARL Glycol Sampling System**

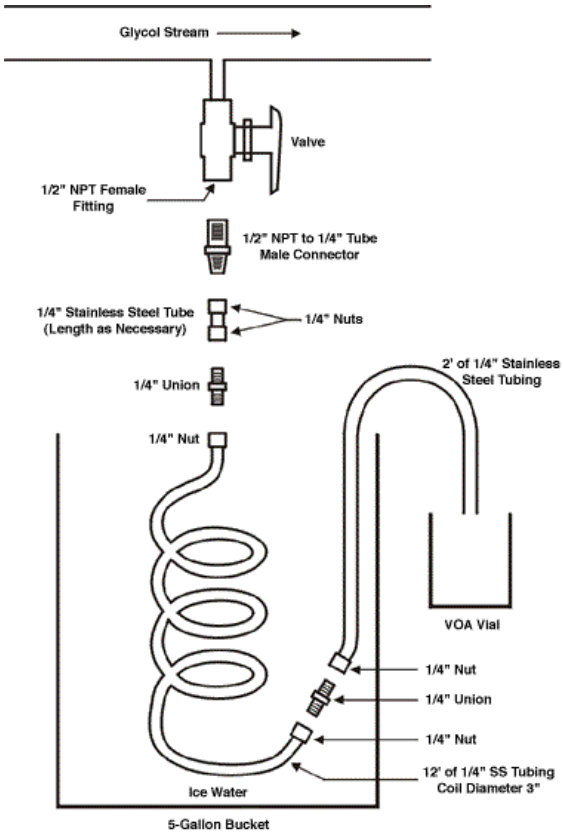


### Sample Vials and Labeling

Glycol samples should be collected in 40 mL volatile organic analysis (VOA) vials. VOA vials seal tighter than regular glass bottles and retain more of the target analytes until the samples are analyzed.

Before collecting the samples, affix a label to the VOA vial that states the date, sample point, sample type (rich or lean glycol sample), and a unique identification number. Once the label is attached to the VOA vial, cover it with a clear tape. Select the writing utensil carefully, since glycol dissolves ink and felt markings. Pencil, or preferably a tested permanent marker (one that does not leave a glycol soluble mark), works best. The label should be completely filled out, affixed to the vial, and covered with clear tape before sampling begins.

(continued)

### Collection of Rich Glycol Samples

**Step 1:** Immerse the 0.25-inch sampling coil in an ice/water bath contained in a five-gallon bucket.

**Step 2:** Open the glycol sampling port and purge a stream of glycol through the sampling coil for two minutes. A rich glycol sample generally sprays from the sample line as a foamy aerosol.

**Step 3:** Place a 40-mL glass VOA vial under the flow of glycol and fill the vial to overflowing.

**Step 4:** Place the cap, with the septum Teflon side down, on the VOA vial immediately after the glycol begins to overflow the vial. Do not over tighten the cap. Trapped gases (headspace) can generally be observed in the vials. **Do not** try to eliminate the trapped gases in the vials because this will result in loss of additional target analytes from the glycol.

### Collection of Lean Glycol Samples

If the lean glycol at the sample point is not too hot to touch, the cooling coil is not needed. Instead, connect a short piece of 0.25-inch stainless steel tubing to the lean glycol line.

**Step 1:** Open the glycol sampling port and purge a stream of glycol through the sampling line for two minutes. Lean glycol generally is less viscous than rich glycol.

**Step 2:** Place a 40-mL glass VOA vial under the flow of glycol and fill the vial to overflowing.

**Step 3:** Place the cap, with the septum Teflon side down, on the VOA vial immediately after the glycol begins to overflow the vial. Do not over tighten the cap. Trapped gas (headspace) generally is <u>not</u> observed in the vials containing lean glycol. **Do not** try to eliminate the trapped gases (if present) in the vials because this will result in loss of additional target analytes from the glycol.

### Shipment of VOA Vials Containing Glycol Samples

Place the glycol samples in a cooler on ice and keep them at about 39 °F (4 °C). Complete a chain-of-custody form and ship the samples under a signed chain-of-custody form to a laboratory for analysis.

## Appendix A-6. Water and Condensate Sample Chain of Custody Log

Enthalpy Analytical, Inc.
2202 Ellis Rd.
Durham, NC 27703

# Chain Of Custody

**Phone**: 919/850-4392
**Fax**: 919/850-9012
**Email**: help@enthalpy.com

| | | | |
|---|---|---|---|
| Site/Company:_____ | Purchase Order No.:_____ | Analytical Methods/Notes:_____ | Sampled by:_____ |
| Address:_____ | Job No.:_____ | _____ | Company: _____ |
| _____ | Contact:_____ | _____ | _____ |
| Tel: _____ | Email: _____ | Fax:_____ | Custody Seal #:_____ |

| Sample Identification | Date | Start time | Stop time | Media/Vol. | Analytical Parameters | Notes |
|---|---|---|---|---|---|---|
| | | | | | | |
| | | | | | | |
| | | | | | | |
| | | | | | | |
| | | | | | | |
| | | | | | | |
| | | | | | | |
| | | | | | | |
| | | | | | | |

| Relinquished by:/Company | Date/Time | Received by:/Company | Date/Time |
|---|---|---|---|
| _____ / _____ | _____ / _____ | _____ / _____ | _____ / _____ |
| **Relinquished by:/Company** | **Date/Time** | **Received by:/Lab** | **Date/Time** |
| _____ / _____ | _____ / _____ | _____ / _____ | _____ / _____ |

## Appendix A-7. Condensate Discharge Event Log

Date:_____ Signature:_____

| Produced Water | | Condensed Hydrocarbon | |
|---|---|---|---|
| 24-hr Time | Discharge Count | 24-hr Time | Discharge Count |
| | Starting Number: | | Starting Number: |
| | | | |
| | | | |
| | | |

## Appendix A-8. Example BTEX Laboratory Report

| | |
|---|---|
| Company | Your Company, Inc. |
| Analyst Initials | JRC |
| Parameters | BTEX |
| # Samples | 4 |

| | |
|---|---|
| Client # | Your Client |
| Job # | XXXX-XX |
| PO # | Verbal |
| Report Date | XX/XX/2002 |

MDL 1.00 (ug/mL)
LOQ 5.00 (ug/mL)
Compound Benzene

Lower Curve Limit 107 (ug/mL)
Upper Curve Limit 873 (ug/mL)

| Sample ID | Lab ID # 1 | Lab ID # 2 | Analysis Method | Retention Time # 1 | Retention Time # 2 | % Diff Ret | Conc # 1 | Conc # 2 | % Diff Conc | Avg Conc (ug/mL) | Vol (mL) | DF | Catch Weight (ug) | Qual |
|---|---|---|---|---|---|---|---|---|---|---|---|---|---|---|
| Run 1 FH | 012F1201.D | 012F1202.D | 0301-50H. | 1.28 | 1.28 | 0.0 | 218 | 236 | 4.2 | 227 | 5.00 | 1.00 | 1,135 | |
| Run 1 BH | 014F1401.D | 014F1402.D | 0301-50L. | NA | NA | NA | 1.00 | 1.00 | NA | 1.00 | 5.00 | 1.00 | 5.00 | ND |
| | | | | | | | | | | | | | 1,135 | |
| Run 2 FH | 013F1301.D | 013F1302.D | 0301-50H. | 1.28 | 1.28 | 0.1 | 231 | 230 | 0.3 | 230 | 5.00 | 1.00 | 1,152 | |
| Run 2 BH | 015F1501.D | 015F1502.D | 0301-50L. | NA | NA | NA | 1.00 | 1.00 | NA | 1.00 | 5.00 | 1.00 | 5.00 | ND |
| | | | | | | | | | | | | | 1,152 | |

(continued)

## Appendix A-8. Example BTEX Laboratory Report
(continued)

Data File G:\TELLER\DATA\MAR2001\0301-34A\012F1201.D Sample Name: Run #1 FH

0301-50

==========

Injection Date : 3/19/01 8:27:40 PM Seq. Line : 12
Sample Name : Run #1 FH Vial : 12
Acq. Operator : jrc Inj : 1
Inj Volume : 1 µl
Acq. Method : G:\TELLER\METHODS\0301-34.M
Last changed : 3/19/01 8:21:53 PM by jrc
(modified after loading)
Analysis Method : G:\TELLER\METHODS\0301-50H.M
Last changed : 3/20/01 10:53:18 AM by jrc
(modified after loading)
The carrier is helium set at 26 psi head pressure.

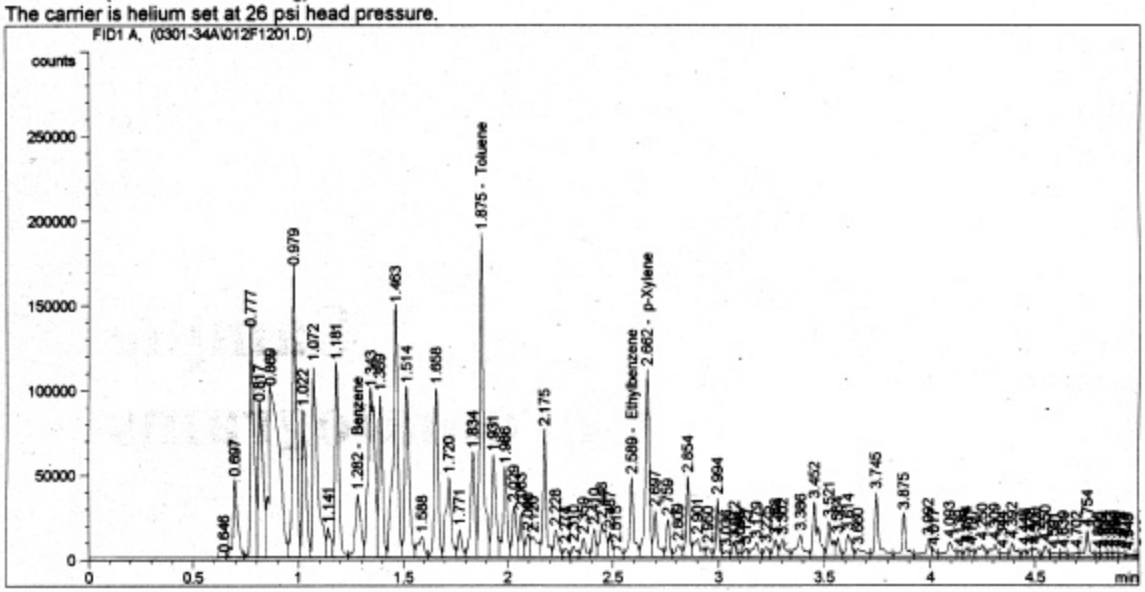


==========

External Standard Report

==========

Sorted By : Signal
Calib. Data Modified : 3/20/01 10:47:33 AM
Multiplier : 1.0000
Dilution : 1.0000

Signal 1: FID1 A,

| RetTime [min] | Type | Area counts*s | Amt/Area [ppmv] | Amount | Grp | Name |
|---|---|---|---|---|---|---|
| 1.282 | VV | 6.47658e4 | 3.35854e-3 | 217.51825 | | Benzene |
| 1.875 | VV | 2.37685e5 | 3.50363e-3 | 832.76176 | | Toluene |
| 2.589 | VV | 5.93323e4 | 3.21567e-3 | 190.79320 | | Ethylbenzene |
| 2.662 | VV | 1.38117e5 | 3.39690e-3 | 469.17010 | | p-Xylene |

Totals : 1710.24330

## Appendix A-9. Makeup Fuel Gas Sample Collection Log

Project: _____ Ambient Pressure _____

Location: _____ Ambient Temp. _____

Source: _____

Sampler: _____

| Sample ID | Date/Time | Gas Temp.($^{o}$F) | Canister ID | Initial Press. (psig) | Final Press. (psig) |
|---|---|---|---|---|---|
| | | | | | |
| | | | | | |
| | | | | | |
| | | | | | |
| | | | | | |
| | | | | | |
| | | | | | |
| | | | | | |
| | | | | | |
| | | | | | |
| | | | | | |
| | | | | | |
| | | | | | |
| | | | | | |
| | | | | | |
| | | | | | |

# APPENDIX B

## Quality Assurance/Quality Control Checks and Log Forms


**Page**

Appendix B-1. Example of Exhaust Stack Emission Testing System Calibrations .....B-2
Appendix B-2. Example of Laboratory Calibrations for BTEX Analysis.....B-9
Appendix B-3. Determination of Condensate Discharge Volume Field Log .....B-9
Appendix B-4. Corrective Action Report.....B-14

# Appendix B-1. Example of Exhaust Stack Emission Testing System Calibrations

| | | | | | | | | |
|---|---|---|---|---|---|---|---|---|
| **CLIENT** | SRI | | | **SITE** | | | | **SOURCE** |
| **DATE** | April 2-3, 2001 | | | | | | | **TEMP** |
| **REFERENCE ANALYZER** | | ML 8840 | | **RESPONSE TIME** | | 1 min | | **RANGE** |
| **HIGH CAL VALUE** | | 22.5 | **+/- 2% FS:** | 22 | - | 23 | | **MID CAL** |
| **LOW CAL VALUE** | | 7 | **+/- 2% FS:** | 6.5 | - | 7.5 | | |

| | **TEST 1** | **TEST 2** | **TEST 3** | **TEST 4** | **TEST 5** | **TEST 6** | **TEST 7** | **TEST 8** |
|---|---|---|---|---|---|---|---|---|
| **INITIAL ZERO** | 0.00 PPM | | | 0.00 PPM | | | | |
| **INITIAL LOW** | 6.95 | | | 7.00 | | | | |
| C.F. (2%) FS | 1.007 | | | 1.000 | | | | |
| **INITIAL HIGH** | 22.70 PPM | | | 22.70 PPM | | | | |
| C.F. (2%) FS | 0.991 | | | 0.991 | | | | |
| **INITIAL MID** | 12.05 PPM | | | 12.00 PPM | | | | |
| C.F. (2%) FS | 0.996 | | | 1.000 | | | | |
| **SYSTEM ZERO** | 0.00 PPM | 0.00 PPM | 0.00 PPM | 0.00 PPM | 0.00 PPM | 0.00 PPM | 0.00 PPM | 0.00 |
| **SYSTEM SPAN** | 12.05 PPM | 12.07 PPM | 11.80 PPM | 12.00 PPM | 12.00 PPM | 11.90 PPM | 11.75 PPM | 11.80 |
| **C.F. (5%) FS** | 0.996 | 0.994 | 1.017 | 1.000 | 1.000 | 1.008 | 1.021 | 1.017 |
| **FINAL ZERO** | 0.00 PPM | 0.00 PPM | 0.00 PPM | 0.00 PPM | 0.00 PPM | 0.00 PPM | 0.00 PPM | 0.00 |
| **FINAL SPAN** | 12.07 PPM | 11.80 PPM | 11.70 PPM | 12.00 PPM | 11.90 PPM | 11.75 PPM | 11.80 PPM | 11.75 |
| **C.F. (5%) FS** | 0.994 | 1.017 | 1.026 | 1.000 | 1.008 | 1.021 | 1.017 | 1.021 |
| **AVERAGE C.F.** | 0.995 | 1.006 | 1.021 | 1.000 | 1.004 | 1.015 | 1.019 | 1.019 |
| **AVERAGE ZERO** | 0.00 | 0.00 | 0.00 | 0.00 | 0.00 | 0.00 | 0.00 | 0.00 |
| **ZERO DRIFT <2%** | 0.0 % | 0.0 % | 0.0 % | 0.0 % | 0.0 % | 0.0 % | 0.0 % | 0.0 |
| **SPAN DRIFT <2%** | -0.1 % | 1.1 % | 0.4 % | 0.0 % | 0.4 % | 0.6 % | -0.2 % | 0.2 |

## Appendix B-2. Example of Laboratory Calibrations for BTEX Analysis

Method G:\TELLER\METHODS\0301-50H.M

***No Entries in table***

==========

==========

Calibration Curves

==========

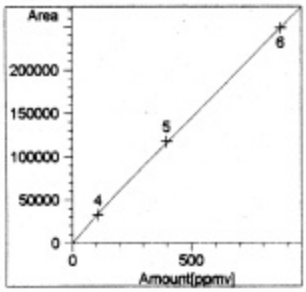


Benzene at exp. RT: 1.285
FID1 A,
Correlation: 0.99989
Residual Std. Dev.: 2307.84077
Formula: y = mx + b
m: 281.44519
b: 3546.32192
x: Amount[ppmv]
y: Area

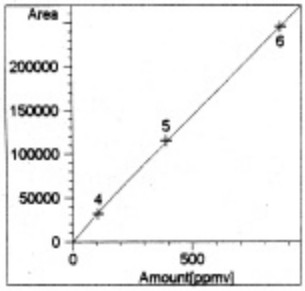


Toluene at exp. RT: 1.877
FID1 A,
Correlation: 0.99988
Residual Std. Dev.: 2310.10711
Formula: y = mx + b
m: 281.22463
b: 3492.10532
x: Amount[ppmv]
y: Area

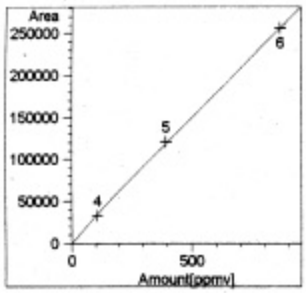


Ethylbenzene at exp. RT: 2.593
FID1 A,
Correlation: 0.99987
Residual Std. Dev.: 2575.57961
Formula: y = mx + b
m: 292.77405
b: 3473.03381
x: Amount[ppmv]
y: Area

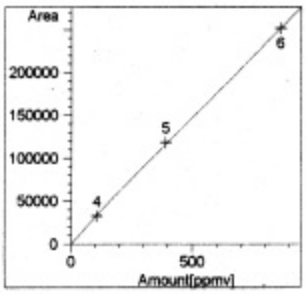


p-Xylene at exp. RT: 2.672
FID1 A,
Correlation: 0.99988
Residual Std. Dev.: 2386.40974
Formula: y = mx + b
m: 287.52804
b: 3217.41094
x: Amount[ppmv]
y: Area

(continued)

## Appendix B-2. Example of Laboratory Calibrations for BTEX Analysis
(continued)

Data File G:\TELLER\DATA\MAR2001\0301-34A\004F0402.D Sample Name: gc-23 pg 158 #4

==========

Injection Date : 3/19/01 5:17:03 PM Seq. Line : 4
Sample Name : gc-23 pg 158 #4 Vial : 4
Acq. Operator : jrc Inj : 2
Inj Volume : 1 µl
Acq. Method : G:\TELLER\METHODS\0301-34.M
Last changed : 3/19/01 5:11:35 PM by jrc
(modified after loading)
Analysis Method : G:\TELLER\METHODS\0301-50H.M
Last changed : 3/20/01 10:50:35 AM by jrc
(modified after loading)
The carrier is helium set at 26 psi head pressure.

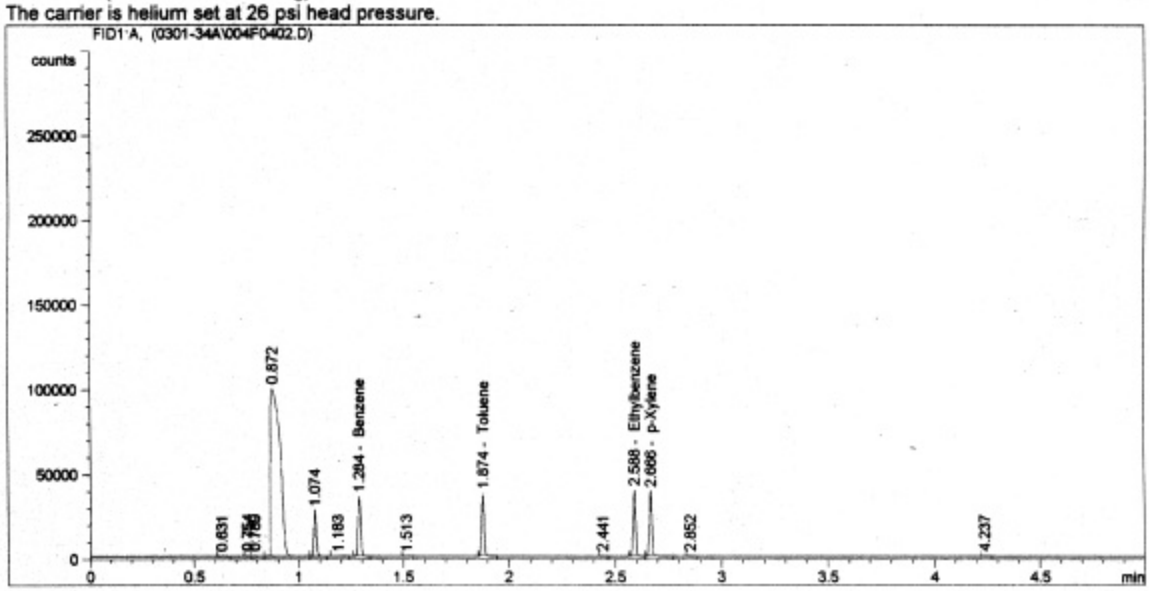


==========

External Standard Report

==========

Sorted By : Signal
Calib. Data Modified : 3/20/01 10:47:33 AM
Multiplier : 1.0000
Dilution : 1.0000

Signal 1: FID1 A,

| RetTime [min] | Type | Area counts*s | Amt/Area [ppmv] | Amount | Grp | Name |
|---|---|---|---|---|---|---|
| 1.284 | BB | 3.24013e4 | 3.17876e-3 | 102.99598 | | Benzene |
| 1.874 | BB | 3.18023e4 | 3.17982e-3 | 101.12571 | | Toluene |
| 2.588 | BV | 3.31906e4 | 3.07183e-3 | 101.95591 | | Ethylbenzene |
| 2.666 | VB | 3.24845e4 | 3.14583e-3 | 102.19082 | | p-Xylene |

Totals : 408.26842

Results obtained with enhanced integrator!

# Appendix B-3. Determination of Condensate Discharge Volume Field Log

### Engineered Concepts Produced Liquids Gallons per Discharge Verification

**IMPORTANT:**
Control Parallax; Read liquid levels at the lowest point on the meniscus.

1. Install tape measure adjacent to or behind sight glass. Install two plastic tie wraps on each sight glass for visual reference. Slide the tie wraps along the sight glass to match upper and lower liquid levels.
2. Observe and record liquid level at least three (3) times prior to each discharge to ensure the highest level is recorded just prior to the discharge.
3. Observe and record liquid level immediately following discharge.
4. Calculate discharge volume according to Equation 10 in Section 2.5.2.

Date:_____ Signature:_____

| Produced Water | | | Condensed Hydrocarbons | | |
|---|---|---|---|---|---|
| **24-hour Time** | **Liquid Level, in** | | **24-hour Time** | **Liquid Level, in** | |
| | $a_1$) | Delta ($c_1$-$d_1$) | | $a_1$) | Delta ($c_1$-$d_1$) |
| | $b_1$) | | | $b_1$) | |
| Disch. Start | $c_1$) | | Disch. Start | $c_1$) | |
| Disch. End | $d_1$) | | Disch. End | $d_1$) | |
| | $a_2$) | Delta ($c_2$-$d_2$) | | $a_2$) | Delta ($c_2$-$d_2$) |
| | $b_2$) | | | $b_2$) | |
| Disch. Start | $c_2$) | | Disch. Start | $c_2$) | |
| Disch. End | $d_2$) | | Disch. End | $d_2$) | |
| | $a_3$) | Delta ($c_3$-$d_3$) | | $a_3$) | Delta ($c_3$-$d_3$) |
| | $b_3$) | | | $b_3$) | |
| Disch. Start | $c_3$) | | Disch. Start | $c_3$) | |
| Disch. End | $d_3$) | | Disch. End | $d_3$) | |
| | Average | | | Average | |
| | $Vol_{disch}$ per Eqn. 10 | | | $Vol_{disch}$ per Eqn. 10 | |

Notes:_____

_____

_____

_____

_____

**Appendix B-4. Corrective Action Report**

# Corrective Action Report

**Verification Title:** _____
**Verification Description:** _____

**Description of Problem:** _____

_____

_____

_____

**Originator:** _____ **Date:** _____

**Investigation and Results:** _____

_____

_____

_____

**Investigator:** _____ **Date:** _____

**Corrective Action Taken:** _____

_____

_____

_____

**Originator:** _____ **Date:** _____
**Approver:** _____ **Date:** _____

Carbon copy: GHG Center Project Manager, GHG Center Director, SRI QA Manager, APPCD Project Officer

# APPENDIX C

## Additional Information

**Page**

Appendix C-1. Estimated Emissions for 7.5 Hp Genset.....C-2

## Appendix C-1. Estimated Emissions for 7.5 Hp Genset

# EMISSIONS RESULTS

Lamba 1.4, 1.1-1.5

### 5/7 Hp Marathon Engine Project

Simulation of Seasonal Average Emissions for 5 Hp engine - **Lambda = 1.4**

Results

| | | |
|---|---|---|
| $NO_X$ | g/bhp.h | 0.97 |
| THC | g/bhp.h | 10.02 |
| NMHC | g/bhp.h | 1.00 |
| CO | g/bhp.h | 2.78 |
| THC + $NO_X$ | g/bhp.h | 10.99 |
| NMHC + $NO_X$ | g/bhp.h | 1.97 |

### 5/7 Hp Marathon Engine Project

Simulation of Seasonal Average Emissions for 5 Hp engine - **Lambda = 1.1-1.5**

Results

| | | |
|---|---|---|
| $NO_X$ | g/bhp.h | 1.96 |
| THC | g/bhp.h | 10.14 |
| NMHC | g/bhp.h | 1.01 |
| CO | g/bhp.h | 3.67 |
| THC + $NO_X$ | g/bhp.h | 12.10 |
| NMHC + $NO_X$ | g/bhp.h | 2.97 |