SRI/USEPA-GHG-VR-22
September 2004

Environmental Technology Verification Report

Swine Waste Electric Power and Heat Production – Martin Machinery Internal Combustion Engine

Prepared by:

Greenhouse Gas Technology Center
Southern Research Institute

Under a Cooperative Agreement With
U.S. Environmental Protection Agency

and

Under Agreement With
Colorado Governor's Office of Energy Management and Conservation

EPA REVIEW NOTICE

This report has been peer and administratively reviewed by the U.S. Environmental Protection Agency, and approved for publication. Mention of trade names or commercial products does not constitute endorsement or recommendation for use.

THE ENVIRONMENTAL TECHNOLOGY VERIFICATION PROGRAM

U.S. Environmental Protection Agency

SOUTHERN RESEARCH INSTITUTE

ETV Joint Verification Statement

TECHNOLOGY TYPE:	Biogas-Fired Internal Combustion Engine Combined With Heat Recovery System
APPLICATION:	Distributed Electrical Power and Heat Generation
TECHNOLOGY NAME:	Martin Machinery Internal Combustion Engine
COMPANY:	Colorado Pork, LLC
ADDRESS:	Lamar, Colorado

The U.S. Environmental Protection Agency (EPA) has created the Environmental Technology Verification (ETV) program to facilitate the deployment of innovative or improved environmental technologies through performance verification and dissemination of information. The goal of the ETV program is to further environmental protection by accelerating the acceptance and use of improved and cost-effective technologies. ETV seeks to achieve this goal by providing high-quality, peer-reviewed data on technology performance to those involved in the purchase, design, distribution, financing, permitting, and use of environmental technologies.

ETV works in partnership with recognized standards and testing organizations, stakeholder groups that consist of buyers, vendor organizations, and permitters, and with the full participation of individual technology developers. The program evaluates the performance of technologies by developing test plans that are responsive to the needs of stakeholders, conducting field or laboratory tests, collecting and analyzing data, and preparing peer-reviewed reports. All evaluations are conducted in accordance with rigorous quality assurance protocols to ensure that data of known and adequate quality are generated and that the results are defensible.

The Greenhouse Gas Technology Center (GHG Center), one of six verification organizations under the ETV program, is operated by Southern Research Institute in cooperation with EPA's National Risk Management Research Laboratory. A technology of interest to GHG Center stakeholders is the use of microturbines and engines as distributed generation sources. Distributed generation (DG) refers to power-generation equipment that provides electric power at a site much closer to customers than central station generation. Recently, biogas production from livestock manure management facilities has become

a promising alternative for fueling DG technologies. These technologies, commonly referred to as anaerobic digesters, decompose manure in a controlled environment and recover methane produced from the manure digestion. The recovered methane can fuel power generators to produce electricity, heat, and hot water. Digesters also reduce foul odor and can reduce the risk of ground- and surface-water pollution.

The GHG Center collaborated with the Colorado Governor's Office of Energy Management and Conservation (OEMC) to evaluate the performance of two combined heat and power systems (CHP systems) that operate on biogas recovered from anaerobic digestion of swine waste at the Colorado Pork farm in Lamar, Colorado. This verification statement provides a summary of the test results for the internal combustion (IC) engine CHP system designed and installed by Martin Machinery, Inc.

TECHNOLOGY DESCRIPTION

The following technology description is based on information provided by Martin Machinery and OEMC and does not represent verified information. The CHP system tested includes an IC engine, a generator, and a heat exchanger. Power is generated with a Caterpillar (Model 3306 ST) IC engine with a rated nominal power output of 100 kW (60 °F, sea level). The engine is a 6 cylinder, 4-stroke, naturally aspirated unit with a 10.5:1 compression ratio and a speed range of 1,000 to 1,800 rpm. The IC engine is used to drive an induction generator manufactured by Marathon Electric (Model No. MCTG-80-3).

The generator produces nominal 208 volts alternating current. The unit supplies a constant electrical frequency of 60 Hz, and is equipped with a control system that allows for automatic and unattended operation. All operations, including startup, operational setting (kW command), dispatch, and shutdown, are performed manually. Electricity generated at this load is fully consumed by equipment used at the facility. During normal farm operations, power demand exceeds the available capacity of the engine/generator set, and power is drawn from the grid. On rare occasions when the power generated exceeds farm demand, a reverse power relay (required by the utility company) throttles down the engine. In the event of a grid power failure, the biogas induction generator is shut down, and the facility has a backup emergency generator to provide power for farm operations.

No digester gas conditioning or compression is needed to operate the engine under site conditions. Digester gas is directed to the engine and fired at the pressure created in the digester (approximately 17 to 18 inches water column). Because the digester gas is not conditioned (e.g., moisture and sulfur removal), engine lubrication oil is changed every 10 days as precautionary maintenance. The configuration of the engine's fuel input jets, along with the low heating value of the biogas (approximately 625 Btu/scf), currently restrict the engine's power output to approximately 45 kW. This is lower than the equipment manufacturer's (Caterpillar) recommended minimum rating for this engine.

The engine is equipped with a Thermal Finned Tube (Model 12-12-60CEN-W) heat exchanger for heat recovery. The heat recovery system consists of a fin-and-tube heat exchanger that circulates water through the heat exchanger at approximately 120 gallons per minute (gpm). The engine exhaust, at approximately 1,100 °F, is the primary source of heat to the exchanger. The engine cooling water is also cycled through the digester heating loop to recover additional heat and provide engine cooling. Circulation of engine coolant is thermostatically controlled to maintain coolant temperature at approximately 175 °F. In the event temperatures exceed 185 °F, excess heat is discarded with the use of an external radiator. The radiator's return water line serves as the coolant for the engine water jacket.

The Colorado Pork facility is a sow farrow-to-wean farm in Lamar, Colorado that began operation in 1999 and houses up to 5,000 sows. The facility employs a complete mix anaerobic digester to reduce odor and meet water quality regulations mandated by the Colorado Department of Public Health and

Environment. The anaerobic digester promotes bacterial decomposition of volatile solids in animal wastes. The resulting effluent stream consists of mostly water, which is allowed to evaporate from a secondary lagoon. Solids produced by the process accumulate in the digester and are manually removed. Recovered heat from the IC engine CHP is circulated through the waste in the digester to maintain the digester temperature at approximately 100 °F. Cool water returning from the digester remains relatively constant throughout the year (approximately 100 °F). A temperature sensor continuously monitors this temperature, and in the event this temperature exceeds 105 °F, an automated mixing valve reduces the flow of hot water entering the digester.

VERIFICATION DESCRIPTION

Testing was conducted during the period of February 2 through 13, 2004. The verification included a series of controlled test periods in which the GHG Center intentionally controlled the unit to produce electricity at three power output levels within its range of operation at this site including 30, 38, and 45 kW. Three replicate test runs were conducted at each setting. The controlled test periods were preceded by 9 days of continuous monitoring to verify electric power production, heat recovery, and power quality performance over an extended period. Normal site operations were maintained during all test periods, where heat was recovered and routed through the digester at temperatures of approximately 105 °F. The classes of verification parameters evaluated were:

- **Heat and Power Production Performance**
- **Emissions Performance (NO_x, CO, CH_4, SO_2, TRS, TPM, NH_3, and CO_2)**
- **Power Quality Performance**

Evaluation of heat and power production performance included verification of power output, heat recovery rate, electrical efficiency, thermal efficiency, and total system efficiency. Electrical efficiency was determined according to the ASME Performance Test Code for Internal Combustion Engines (ASME PTC-17). Tests consisted of direct measurements of fuel flow rate, fuel lower heating value (LHV), and power output. Heat recovery rate and thermal efficiency were determined according to ANSI/ASHRAE test methods and consisted of direct measurement of heat-transfer fluid flow rate and differential temperatures. Ambient temperature, barometric pressure, and relative humidity measurements were also collected to characterize the condition of the combustion air used by the engine. All measurements were recorded as 1-minute averages during the controlled test periods and throughout the 7-day monitoring period.

The evaluation of emissions performance occurred simultaneously with efficiency testing. Pollutant concentration and emission rate measurements for nitrogen oxides (NO_X), carbon monoxide (CO), total hydrocarbons (THC), methane (CH_4), sulfur dioxide (SO_2), total reduced sulfur (TRS), total particulate matter (TPM), ammonia (NH_3), and carbon dioxide (CO_2) were conducted in the engine exhaust stack. All test procedures used in the verification were U.S. EPA reference methods recorded in the Code of Federal Regulations (CFR). Pollutant emissions are reported as concentrations in parts per million volume, dry (ppmvd) corrected to 15-percent oxygen (O_2), and as mass per unit time (lb/hr). The mass emission rates are also normalized to engine power output and reported as pounds per kilowatt hour (lb/kWh).

Annual NO_X and CO_2 emissions reductions for the engine were estimated by comparing measured lb/kWh emission rates with corresponding emission rates for the baseline power-production systems (i.e., average regional grid emission factors for U.S. and Colorado). Electrical power quality parameters, including electrical frequency and voltage output, were measured during the 9-day extended test. Current and voltage total harmonic distortions (THD) and power factors were also monitored to characterize the

quality of electricity supplied to the end user. The guidelines listed in "The Institute of Electrical and Electronics Engineers' (IEEE) Recommended Practices and Requirements for Harmonic Control in Electrical Power Systems" were used to perform power quality testing.

Quality Assurance (QA) oversight of the verification testing was provided following specifications in the ETV Quality Management Plan (QMP). The GHG Center's QA manager conducted an audit of data quality on at least 10 percent of the data generated during this verification and a review of this report. Data review and validation was conducted at three levels including the field team leader (for data generated by subcontractors), the project manager, and the QA manager. Through these activities, the QA manager has concluded that the data meet the data quality objectives that are specified in the Test and Quality Assurance Plan.

VERIFICATION OF PERFORMANCE

Test results are representative of engine operations at this site only. Although not independently verified, heat and power production performance and particularly CO and THC emissions performance were likely negatively impacted by operating the engine below manufacturer's recommended minimum rating. The digester system's operation, maintenance, or design could have also negatively impacted engine performance.

Heat and Power Production Performance

ENGINE CHP HEAT AND POWER PRODUCTION					
Test Condition (Power Command)	**Electrical Power Generation**		**Heat Recovery Performance**		**Total CHP System Efficiency (%)**
	Power Delivered (kW)	**Efficiency (%)**	**Heat Recovery (10^3Btu/hr)**	**Thermal Efficiency (%)**	
45 kW	44.7	19.7	250	32.4	52.1
38 kW	37.5	17.1	227	30.3	47.4
30 kW	29.6	13.8	219	30.0	43.8

- At a 45 kW power command, average power output was 44.7 kW and electrical efficiency averaged 19.7 percent.

- Electrical efficiency at the reduced loads was 17.1 percent at a power output of 37.5 kW, and 13.8 percent at 29.6 kW.

- Total CHP efficiency during the controlled test periods ranged from 52.1 percent at the 45 kW load to 43.8 percent at 30 kW. Normal heat recovery operations were maintained during the controlled test periods with the system configured to maintain the digester temperature at approximately 100 °F.

- During the 9-day monitoring period, the engine operated on biogas for a total of 75 hours. During this time, a total of 3,358 kWh electricity was generated at an average rate of 44.6 kW, and 17.85 million Btu (5,232 kWh) of heat was recovered and used at an average heat recovery rate of 238 x 10^3 Btu/hr.

Emissions Performance

ENGINE EMISSIONS (lb/kWh)								
Power Command	**NO_X**	**CO**	**CH_4**	**SO_2**	**TRS**	**TPM**	**NH_3**	**CO_2**
45 kW	0.012	0.058	0.112	0.023	0.005	0.00009	0.000004	1.97
38 kW	0.006	Above range	0.114	0.024	0.007	Not tested	Not tested	2.07
30 kW	0.002	Above range	0.150	0.030	0.009	Not tested	Not tested	2.21

- NO_X emissions at 45 kW were 0.012 lb/kWh and decreased as power output decreased. CO emissions averaged 0.058 lb/kWh at 45 kW and exceeded the analytical range of the CO analyzer at the lower loads (greater than 10,000 ppm).

- Hydrocarbon emissions were also very high. THC concentrations were above the analyzer range (10,000 ppm as CH_4) and therefore not reported. Using an on-site gas chromatograph and flame ionization detector, analysts were able to quantify CH_4 emissions at an average of 0.112 lb/kWh at 45 kW. CH_4 emissions increased to a high of 0.150 lb/kWh at the 30 kW power command.

- Emissions of SO_2 and TRS averaged 0.023 and 0.005 lb/kWh respectively at 45 kW. Both increased slightly at the lower loads tested. Emissions of TPM and NH_3 were very low during the full load tests.

- NO_X emissions per unit electrical power output at 45 kW (0.012 lb/kWh), are higher than the average fossil fuel emission levels reported for the U.S. and Colorado regional grids (0.0066 and 0.0077 lb/kWh respectively). The average fossil fuel CO_2 emissions for the U.S. and Colorado regional grids are estimated at 2.02 and 2.13 lb/kWh, both slightly higher than the engine CHP emissions of 1.97 lb/kWh at maximum power output. These values yield an average annual emission increase of 0.37 and 0.29 tons (82 and 55 percent) for NO_X for the two scenarios. Annual CO_2 emissions are estimated to be reduced by the CHP by 137 and 145 tons (2.2 and 7.6 percent) for the two scenarios. These estimated changes in annual emissions are based on electrical generation only and do not include environmental benefits that may be realized through recovery and use of waste heat.

Power Quality Performance

- Average electrical frequency was 59.998 Hz and average voltage output was 208.63 volts.
- The power factor remained relatively constant for all monitoring days with an average of 79.74 percent.
- The average current total harmonic distortion was 5.23 percent and the average voltage THD was 0.92 percent. The THD threshold specified in IEEE 519 is ± 5 percent.

Details on the verification test design, measurement test procedures, and Quality Assurance/Quality Control (QA/QC) procedures can be found in the Test plan titled *Test and Quality Assurance Plan for Swine Waste Electric Power and Heat Production Systems: Capstone MicroTurbine and Martin Machinery Internal Combustion Engine* (SRI 2002). Detailed results of the verification are presented in the Final Report titled *Environmental Technology Verification Report for Swine Waste Electric Power and Heat Production - Martin Machinery Internal Combustion Engine* (SRI 2004). Both can be downloaded from the GHG Center's web-site (www.sri-rtp.com) or the ETV Program web-site (www.epa.gov/etv).

Signed by Lawrence W. Reiter, Ph.D. 9/27/04

Lawrence W. Reiter, Ph.D.
Acting Director
National Risk Management Research Laboratory
Office of Research and Development

Signed by Stephen D. Piccot 9/13/04

Stephen D. Piccot
Director
Greenhouse Gas Technology Center
Southern Research Institute

Notice: GHG Center verifications are based on an evaluation of technology performance under specific, predetermined criteria and the appropriate quality assurance procedures. The EPA and Southern Research Institute make no expressed or implied warranties as to the performance of the technology and do not certify that a technology will always operate at the levels verified. The end user is solely responsible for complying with any and all applicable Federal, State, and Local requirements. Mention of commercial product names does not imply endorsement or recommendation.

EPA REVIEW NOTICE

This report has been peer and administratively reviewed by the U.S. Environmental Protection Agency, and approved for publication. Mention of trade names or commercial products does not constitute endorsement or recommendation for use.

SRI/USEPA-GHG-VR-22
September 2004

Greenhouse Gas Technology Center

A U.S. EPA Sponsored Environmental Technology Verification (ETV) Organization

Environmental Technology Verification Report

Swine Waste Electric Power and Heat Production – Martin Machinery Internal Combustion Engine

Prepared By:
Greenhouse Gas Technology Center
Southern Research Institute
PO Box 13825
Research Triangle Park, NC 27709 USA
Telephone: 919/806-3456

Under EPA Cooperative Agreement CR 829478

U.S. Environmental Protection Agency
Office of Research and Development
National Risk Management Research Laboratory
Air Pollution Prevention and Control Division
Research Triangle Park, NC 27711 USA

EPA Project Officer: David A. Kirchgessner
Colorado Governor's Office Project Officer: Edward Lewis

TABLE OF CONTENTS

Page

LIST OF FIGURES ..... **iii**
LIST OF TABLES ..... **iii**
ACKNOWLEDGMENTS ..... **iv**
ACRONYMS AND ABBREVIATIONS ..... **v**

1.0 INTRODUCTION **1-1**
1.1. BACKGROUND 1-1
1.2. CONBINED HEAT AND POWER TECHNOLOGY DESCRIPTION 1-3
1.3. TEST FACILITY DESCRIPTION 1-5
1.4. PERFORMANCE VERIFICATION OVERVIEW 1-7
1.4.1. Heat and Power Production Performance 1-8
1.4.2. Power Quality Performance 1-12
1.4.3. Emissions Performance 1-13
1.4.4. Estimated Annual Emission Reductions 1-14

2.0 VERIFICATION RESULTS **2-1**
2.1. OVERVIEW 2-1
2.2. HEAT AND POWER PRODUCTION PERFORMANCE 2-3
2.2.1. Electrical Power Output, Heat Recovery Rate, and Efficiency During Controlled Tests 2-3
2.2.2. Electrical and Thermal Energy Production and Efficiency During the Extended Test Period 2-6
2.3. POWER QUALITY PERFORMANCE 2-8
2.3.1. Electrical Frequency 2-8
2.3.2. Voltage Output 2-8
2.3.3. Power Factor 2-9
2.3.4. Current and Voltage Total Harmonic Distortion 2-10
2.4. EMISSIONS PERFORMANCE 2-12
2.4.1. CHP System Stack Exhaust Emissions 2-12
2.4.2. Estimation of Annual Emission Reductions 2-15

3.0 DATA QUALITY ASSESSMENT **3-1**
3.1. DATA QUALITY OBJECTIVES 3-1
3.2. RECONCILIATION OF DQOs AND DQIs 3-2
3.2.1. Power Output 3-5
3.2.2. Electrical Efficiency 3-6
3.2.2.1. PTC-17 Requirements for Electrical Efficiency Determination 3-7
3.2.2.2. Ambient Measurements 3-8
3.2.2.3. Fuel Flow Rate 3-8
3.2.2.4. Fuel Lower Heating Value 3-8
3.2.3. Heat Recovery Rate and Efficiency 3-8
3.2.4. Total Efficiency 3-9
3.2.5. Exhaust Stack Emission Measurements 3-10
3.2.5.1. NO_X, CO, CO_2, SO_2, TRS, and O_2 Concentrations 3-10
3.2.5.2. CH_4 Concentrations 3-11
3.2.5.3. Total Particulate Matter and Exhaust Gas Volumetric Flow Rate 3-12
3.2.5.4. NH_3 Concentrations 3-12

4.0 REFERENCES **4-1**

LIST OF FIGURES

		Page
Figure 1-1	The Colorado Pork IC Engine CHP System	1-3
Figure 1-2	IC Engine CHP System Process Diagram	1-4
Figure 1-3	Colorado Pork Anaerobic Digester	1-5
Figure 1-4	Colorado Pork Waste-to-Energy Process Diagram	1-7
Figure 1-5	Schematic of Measurement System	1-11
Figure 2-1	Engine Operations During Extended Monitoring Test Periods	2-2
Figure 2-2	CHP System Efficiency During Controlled Test Periods	2-6
Figure 2-3	Heat and Power Production During the Extended Monitoring Period	2-7
Figure 2-4	Ambient Temperature Effects on Power and Heat Production	2-7
Figure 2-5	IC Engine Frequency During Extended Test Period	2-8
Figure 2-6	IC Engine Voltage During Extended Test Period	2-9
Figure 2-7	IC Engine Power Factor During Extended Test Period	2-10
Figure 2-8	IC Engine Current THD During Extended Test Period	2-11
Figure 2-9	IC Engine Voltage THD During Extended Test Period	2-11

LIST OF TABLES

		Page
Table 1-1	Martin Machinery CHP Specifications	1-4
Table 1-2	Controlled and Extended Test Periods	1-9
Table 1-3	Summary of Emissions Testing Methods	1-13
Table 1-4	CO_2 and NO_X Emission Rates for Two Geographical Regions	1-15
Table 2-1	Engine CHP Heat and Power Production Performance	2-4
Table 2-2	Engine CHP Fuel Input and Heat Recovery Unit Operating Conditions	2-5
Table 2-3	Electrical Frequency During Extended Period	2-8
Table 2-4	IC Engine Voltage During Extended Period	2-9
Table 2-5	Power Factors During Extended Period	2-10
Table 2-6	IC Engine THD During Extended Period	2-10
Table 2-7	IC Engine CHP Emissions During Controlled Periods	2-13
Table 2-8	Comparison of IC Engine CHP Emissions to Regional Emissions for Equivalent Grid Power	2-16
Table 3-1	Verification Parameter Data Quality Objectives	3-1
Table 3-2	Summary of Data Quality Goals and Results	3-3
Table 3-3	Results of Additional QA/QC Checks	3-6
Table 3-4	Variability Observed in Operating Conditions	3-7
Table 3-5	Summary of Emissions Testing Natural Calibrations and QC Checks	3-11

ACKNOWLEDGMENTS

The Greenhouse Gas Technology Center wishes to thank the Colorado Governor's Office of Energy Management and Conservation, especially Edward Lewis, for providing funding for this project, and for reviewing and providing input on the testing strategy and this Verification Report. Thanks are also extended to the Colorado Pork Farm (a subsidiary of Custom Swine Corporation) for hosting the verification. Finally, special thanks to Gerald Licano of Colorado Pork for his assistance with site operation and execution of the verification testing.

ACRONYMS AND ABBREVIATIONS

Abs Diff.	absolute difference
AC	alternating current
acf	actual cubic feet
ADER	average displaced emission rate
ADQ	Audit of Data Quality
amp	amperes
ANSI	American National Standards Institute
APPCD	Air Pollution Prevention and Control Division
ASHRAE	American Society of Heating, Refrigerating and Air-Conditioning Engineers, Inc.
ASME	American Society of Mechanical Engineers
Btu	British thermal units
Btu/hr	British thermal units per hour
Btu/lb	British thermal units per pound
Btu/min	British thermal units per minute
Btu/scf	British thermal units per standard cubic foot
CAR	Corrective Action Report
C1	quantification of methane
CH_4	methane
CHP	combined heat and power
CO	carbon monoxide
CO_2	carbon dioxide
CT	current transformer
DAS	data acquisition system
DG	distributed generation
DOE	U.S. Department of Energy
DP	differential pressure
DQI	data quality indicator
DQO	data quality objective
dscf/10^6Btu	dry standard cubic feet per million British thermal units
EIA	Energy Information Administration
EPA	Environmental Protection Agency
ETV	Environmental Technology Verification
°C	degrees Celsius
°F	degrees Fahrenheit
FID	flame ionization detector
fps	feet per second
ft^3	cubic feet
gal	U.S. gallons
GC	gas chromatograph
GHG Center	Greenhouse Gas Technology Center
gpm	gallons per minute
GU	generating unit
Hg	Mercury (metal)
HHV	higher heating value
hr	hour

(continued)

ACRONYMS/ABBREVIATIONS
(continued)

Hz	hertz
IC	internal combustion
IEEE	Institute of Electrical and Electronics Engineers
ISO	International Standards Organization
kVA	kilovolt-amperes
kVAr	kilovolt reactive
kW	kilowatts
kWh	kilowatt hours
kWh_e	kilowatt hours electrical
kWh_{th}	kilowatt hours thermal
kWh/yr	kilowatt hours per year
lb	pounds
lb/Btu	pounds per British thermal unit
lb/dscf	pounds per dry standard cubic foot
lb/ft^3	pounds per cubic feet
lb/hr	pounds per hour
lb/kWh	pounds per kilowatt-hour
lb/yr	pounds per year
LHV	lower heating value
10^3Btu/hr	thousand British thermal units per hour
10^6Btu/hr	million British thermal units per hour
10^6cf	million cubic feet
mol	mole
N_2	nitrogen
NDIR	nondispersive infrared
NIST	National Institute of Standards and Technology
NO	nitrogen oxide
NO_2	nitrogen dioxide
NO_X	nitrogen oxides
NSPS	New Source Performance Standards
O_2	oxygen
O_3	ozone
OEMC	Colorado Governor's Office of Energy Management and Conservation
ORD	Office of Research and Development
PEA	Performance Evaluation Audit
ppmv	parts per million volume
ppmvw	Parts per million volume wet
ppmvd	parts per million volume, dry
psia	pounds per square inch, absolute
psig	pounds per square inch, gauge
PT	potential transformer
QA/QC	Quality Assurance/Quality Control

(continued)

ACRONYMS/ABBREVIATIONS
(continued)

QMP	Quality Management Plan
Rel. Diff.	relative difference
Report	Environmental Technology Verification Report
RH	relative humidity
rms	root mean square
RTD	resistance temperature detector
scf	standard cubic feet
scfh	standard cubic feet per hour
scfm	standard cubic feet per minute
Southern	Southern Research Institute
T&D	transmission and distribution
Test plan	Test and Quality Assurance Plan
THCs	total hydrocarbons
THD	total harmonic distortion
TSA	technical systems audit
U.S.	United States
VAC	volts alternating current

1.0 INTRODUCTION

1.1. BACKGROUND

The U.S. Environmental Protection Agency's Office of Research and Development (EPA-ORD) operates the Environmental Technology Verification (ETV) program to facilitate the deployment of innovative technologies through performance verification and information dissemination. The goal of ETV is to further environmental protection by accelerating the acceptance and use of improved and innovative environmental technologies. Congress funds ETV in response to the belief that there are many viable environmental technologies that are not being used for the lack of credible third-party performance data. With performance data developed under this program, technology buyers, financiers, and permitters in the United States and abroad will be better equipped to make informed decisions regarding environmental technology purchase and use.

The Greenhouse Gas Technology Center (GHG Center) is one of six verification organizations operating under the ETV program. The GHG Center is managed by EPA's partner verification organization, Southern Research Institute (Southern), which conducts verification testing of promising greenhouse gas mitigation and monitoring technologies. The GHG Center's verification process consists of developing verification protocols, conducting field tests, collecting and interpreting field and other data, obtaining independent peer-reviewed input, and reporting findings. Performance evaluations are conducted according to externally reviewed verification Test and Quality Assurance Plans (test plan) and established protocols for quality assurance.

The GHG Center is guided by volunteer groups of stakeholders. These stakeholders guide the GHG Center on which technologies are most appropriate for testing, help disseminate results, and review Test plans and Technology Verification Reports (report). The GHG Center's Executive Stakeholder Group consists of national and international experts in the areas of climate science and environmental policy, technology, and regulation. It also includes industry trade organizations, environmental technology finance groups, governmental organizations, and other interested groups. The GHG Center's activities are also guided by industry specific stakeholders who provide guidance on the verification testing strategy related to their area of expertise and peer-review key documents prepared by the GHG Center.

A technology of interest to GHG Center stakeholders is the use of microturbines and engines as distributed generation sources. Distributed generation (DG) refers to power-generation equipment, typically ranging from 5 to 1,000 kilowatts (kW), that provide electric power at a site much closer to customers than central station generation. A distributed power unit can be connected directly to the customer or to a utility's transmission and distribution system. Examples of technologies available for DG include gas turbine generators, internal combustion engine generators (e.g., gas, diesel), photovoltaics, wind turbines, fuel cells, and microturbines. DG technologies provide customers one or more of the following main services: stand-by generation (i.e., emergency backup power), peak shaving capability (generation during high-demand periods), baseload generation (constant generation), or cogeneration {combined heat and power [CHP]generation}.

Recently, biogas production from livestock manure management facilities has become a promising alternative for fueling DG technologies. EPA estimates annual U.S. methane emissions from livestock manure management at 17.0 million tons carbon equivalent, which accounts for 10 percent of total 1997 methane emissions. The majority of methane emissions come from large swine and dairy farms that manage manure as slurry. EPA expects U.S. methane emissions from livestock manure to grow by over

25 percent from 2000 to 2020. Cost effective technologies are available that can stem this emission growth by recovering methane and using it as an energy source. These technologies, commonly referred to as anaerobic digesters, decompose manure in a controlled environment and recover methane produced from the manure. The recovered methane can fuel power generators to produce electricity, heat, and hot water. Digesters also reduce foul odor and can reduce the risk of ground- and surface-water pollution.

The GHG Center and the Colorado Governor's Office of Energy Management and Conservation (OEMC) agreed to collaborate and share the cost of verifying two DG technologies that operate on biogas recovered from swine waste. These verifications evaluated the performance of a microturbine combined heat and power (CHP) system offered by Capstone Turbine Corporation and an internal combustion (IC) engine CHP system offered by Martin Machinery, Inc. Both units are currently in operation at an anaerobic digestion facility managed by Colorado Pork, LLC near Lamar, Colorado. This is the only swine farm in Colorado that is producing electrical power from animal waste. The electricity is used by Colorado Pork to offset electricity purchases from the local electric cooperative. Some of the recovered heat is used to control digester temperature, which optimizes and enhances biogas production. Both CHP systems are interconnected to the electric utility grid, but excess power is not presently exported. The OEMC team is currently under negotiations with the local utility to export power for sale.

The GHG Center evaluated the performance of the two CHP systems by conducting field tests over a fourteen-day verification period (February 2 - 15, 2004). These tests were planned and executed by the GHG Center to independently verify the electricity generation rate, thermal energy recovery rate, electrical power quality, energy efficiency, emissions, and greenhouse gas emission reductions for the Colorado Pork farm. This verification statement and report provides the results of the IC engine CHP performance evaluation. Results of the testing conducted on the microturbine CHP system are reported in a separate report titled *Environmental Technology Verification Report – Swine Waste Electric Power and Heat Production – Capstone 30 kW Microturbine System* [1].

Details on the verification test design, measurement test procedures, and Quality Assurance/Quality Control (QA/QC) procedures can be found in the test plan titled *Test and Quality Assurance Plan – Swine Waste Electric Power and Heat Production Systems: Capstone Microturbine and Martin Machinery Internal Combustion Engine* [2]. It can be downloaded from the GHG Center's web-site (www.sri-rtp.com) or the ETV Program web-site (www.epa.gov/etv). The test plan describes the rationale for the experimental design, the testing and instrument calibration procedures planned for use, and specific QA/QC goals and procedures. The Test plan was reviewed and revised based on comments received from OEMC and the EPA Quality Assurance Team. The Test plan meets the requirements of the GHG Center's Quality Management Plan (QMP) and satisfies the ETV QMP requirements. Deviations from the Test plan were required in some cases. These deviations and the alternative procedures selected for use were initially documented in Corrective Action Reports (CARs) and are discussed in this report.

The remainder of Section 1.0 describes the IC engine CHP system technology and test facility and outlines the performance verification procedures that were followed. Section 2.0 presents test results, and Section 3.0 assesses the quality of the data obtained.

1.2. CONBINED HEAT AND POWER TECHNOLOGY DESCRIPTION

The Colorado Pork facility uses an IC engine fired with digester gas to generate electricity and thermal energy. This system, designed and built by Martin Machinery, is one of the first cogeneration installations in the country that generates both electrical and thermal energy using digester gas for fuel. The CHP system tested (Figure 1-1) includes an IC engine, an electric generator, and a heat exchanger. Figure 1-2 illustrates a simplified process flow diagram of the CHP system, and a discussion of key components is provided.

Figure 1-1. The Colorado Pork IC Engine CHP System

Power is generated with a Caterpillar (Model 3306 ST) IC engine, with a nominal power output of 100 kW (60 ^{o}F, sea level). Table 1-1 summarizes the specifications reported by Martin Machinery for this engine/generator set. The IC engine is a 6 cylinder, 4-stroke, naturally aspirated unit with a 10.5:1 compression ratio and a speed range of 1,000 to 1,800 rpm. The IC engine is used to drive an induction generator manufactured by Marathon Electric (Model No. MCTG-80-3). This engine was overhauled in December 2003.

The generator produces nominal 208 volts alternating current (VAC). The unit supplies a constant electrical frequency of 60 Hz, and is supplied with a control system that allows for automatic and unattended operation. All operations, including startup, operational setting (kW command), dispatch, and shutdown, are performed manually.

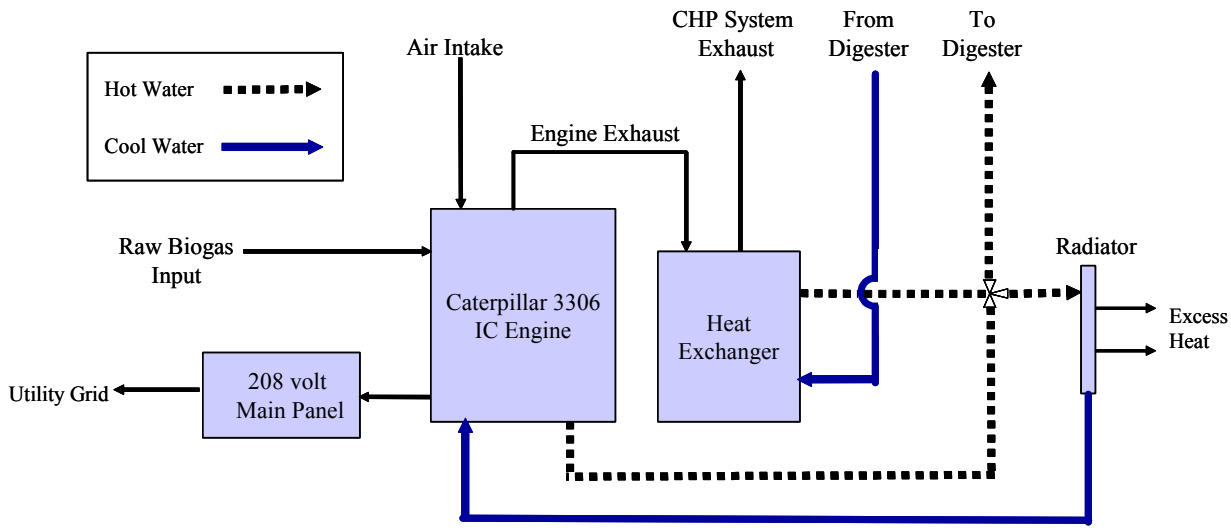

Figure 1-2. IC Engine CHP System Process Diagram

Table 1-1. Martin Machinery CHP Specifications
(Source: Colorado Pork, Martin Machinery)

Weight	Engine only	2,090 lb
Max. engine speed		1,800 rpm
Electrical inputs	Power (startup)	Utility grid or backup generator
Electrical outputs	Power at ISO conditions 60 °F (at sea level) for electric	100 kW, 208 VAC, 60 Hz, 3-phase
Fuel pressurerequired	w/o gas compressor	2 to 20 psi, nominal
Fuel input	Heat input	1,133,060 Btu/hr at 100 kW 905,000 Btu/hr at 75 kW ~ 820,292 Btu/hr at 65 kW 693,230 Btu/hr at 50 kW
	Flow rate (LHV = 905 btu/ft^3)	1,252 scfh at 100 kW 1,000 scfh at 75 kW 766 scfh at 50 kW
Electrical efficiency, lower heating value (LHV) basis	With natural gas (ISO conditions)	30% at 100 kW 28% at 75 kW 25% at 50 kW
Heat rate	At full load	11,331 Btu/kWh
Heat recovery potential	Exhaust gas temperature Exhaust energy available for heat recovery	1,100 °F 508,980 Btu/hr at 100 kW 311,954 Btu/hr at 50 kW

Biogas production rate, biogas heat content, and engine fuel jet configuration currently limit engine operation to approximately 45 kW, or about 45 percent of rated capacity when operating on biogas. It should be noted here that operation at this load is below the engine manufacturer's recommended minimum operating point of 50 percent of rating. Electricity generated at this load is fully consumed by equipment used at the facility. During normal farm operations, power demand exceeds the available

capacity of the engine and generator set, and additional power is drawn from the grid. Typically, the engine is run at 45 kW and switched to run on natural gas overnight to avoid reducing biogas pressure and collapsing the digester cover. When the microturbine is used, it can be run on biogas continuously. In the event of a grid power failure, the engine shuts down and the facility has a backup emergency generator to provide power for farm operations.

No digester gas conditioning or compression is needed to operate the engine under site conditions. Digester gas is directed to the engine and fired at the pressure created in the digester (approximately 17 to 18 inches water column). Because the digester gas is not conditioned (e.g., moisture and sulfur removal), engine lubrication oil is changed every 10 days as precautionary maintenance.

The engine is equipped with a thermal finned tube (Model 12-12-60CEN-W) heat exchanger for heat recovery. The heat recovery system consists of a fin-and-tube heat exchanger, which circulates water through the heat exchanger at approximately 120 gallons per minute (gpm). The engine exhaust, at approximately 1,100 °F, is the primary source of heat to the exchanger. The engine cooling water is also cycled through the digester heating loop to recover additional heat and provide engine cooling. Circulation of engine coolant is thermostatically controlled to maintain coolant temperature at approximately 175 °F. In the event temperatures exceed 185 °F, excess heat is discarded with the use of an external radiator. The radiator's return water line serves as the coolant for the engine water jacket.

1.3. TEST FACILITY DESCRIPTION

The Colorado Pork facility is a sow farrow-to-wean farm in Lamar, Colorado that began operation in 1999 and houses up to 5,000 sows. The facility employs a complete mix anaerobic digester (Figure 1-3) to reduce odor and meet water quality regulations mandated by the Colorado Department of Public Health and Environment. The anaerobic digester promotes bacterial decomposition of volatile solids in animal wastes. The resulting effluent stream consists of mostly water, which is allowed to evaporate from a secondary lagoon.

Figure 1-3. Colorado Pork Anaerobic Digester

Waste from 5,000 sows is collected in shallow pits below the slatted floors of the hog barns. These pits are connected via sewer lines to an in-ground concrete holding tank (50,000 gallon capacity). Each morning, the pits are drained on a rotating basis to flush about 15,000 gallons of waste to the holding tank. The holding tank is equipped with a 17 horsepower (Hp) chopper pump that breaks up large pieces of waste. Each morning, about 15,000 gallons of waste is pumped from the holding tank into the digester.

The digester is a 70 x 80 x 14 foot deep in-ground concrete tank with a capacity of 500,000 gallons. The digester is equipped with two propeller type mixers on each end. The mixers normally operate for 30 minutes daily to rejuvenate gas production that would otherwise decline between waste charging events. Hot water is circulated through the digester using a matrix of 3-inch black steel pipe (total length of about 0.5 mile) to maintain the digester temperature at 100 °F. Small adjustments to the water flow rate are required periodically and are conducted manually by the site operator. The retention time in the digester is about 40 days.

The effluent exits the digester over a weir, and is directed gravimetrically to a lagoon for sludge settling and water evaporation. The lagoon is designed to hold up to 20 years of sludge production. Tests performed by environmental regulatory personnel have determined the site meets current odor and discharge requirements.

The biogas produced from the decomposed waste is collected under a high-density polyethylene (HDPE) cover at a pressure of 15 to 20 inches water column. A manifold collects the biogas and routes it to the engine/turbine building. A pressure relief valve senses pressure buildup when neither the engine nor the turbine are operating, and diverts the biogas to a flare. The digester is currently producing about 20,000 cubic feet of biogas per day. The primary gas constituents of the raw biogas are CH_4 (around 67 %) and CO_2 (approximately 32 %). Analysis of samples collected at the site show hydrogen sulfide (H_2S) concentrations in the gas ranging from 700 to 6,800 parts per million (ppm) and averaging around 6,000 ppm. The gas also contains trace amounts of ammonia (NH_3), mercaptans, and other noxious gases, and is saturated with water vapor. The lower heating value (LHV) of the biogas is approximately 625 Btu/scf.

Figure 1-4 is a schematic of the waste-to-energy production process at Colorado Pork showing integration of the digester, IC engine CHP, and microturbine CHP. In May 2000, the IC engine CHP system was installed first to offset electricity purchase costs. The microturbine CHP system was installed in February 2002, to evaluate the feasibility and economics of the two different power generation technologies. Both systems are currently housed in a building adjacent to the digester.

With the IC engine CHP system, biogas is not pre-treated. The IC engine's heat recovery system produces hot water at approximately 105 °F. In the event this temperature exceeds 185 °F (i.e., during extremely hot summer days), an automatic valve is activated, which discards some of the excess heat through a radiator. The radiator's return water line is used to cool the engine water jacket and prevent overheating the engine.

The IC engine hot water line combines with the microturbine hot water line, and the mixture is circulated through the waste in the digester to maintain the digester temperature at 100 °F. Cool water returning from the digester remains relatively constant throughout the year (approximately 100 °F). A temperature sensor continuously monitors this temperature, and in the event this temperature exceeds 105 °F, an automatic mixing valve reduces the flow of hot water entering the digester. This adjustment is performed only a few times per year, as digester temperatures remain relatively stable.

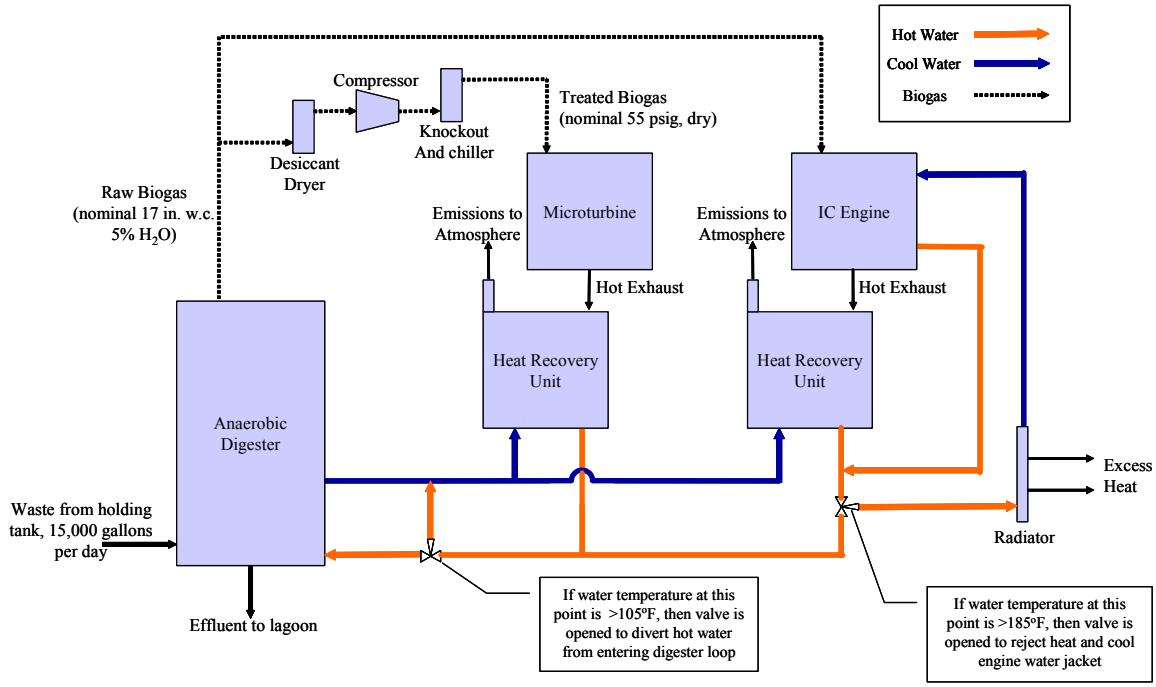

Figure 1-4. Colorado Pork Waste-to-Energy Process Diagram

1.4. PERFORMANCE VERIFICATION OVERVIEW

This verification test was designed to evaluate the performance of the IC engine CHP system—not the overall system integration or specific management strategy. The test plan specified a series of controlled test periods in which the GHG Center intentionally modulated the unit to produce electricity at nominal power output commands of 40, 50, 65, and 80 kW. Additionally, the test plan specified that these tests would be conducted with the heat recovery potential maximized by increasing the hot water supply temperature from the heat recovery unit to approximately 135 ^{o}F. However, changes in CHP system operations at the farm have occurred since development of the test plan. Specifically, engine operation is currently limited to approximately 45 kW when operating on biogas due to limitations in gas production rate and the design of the engines' fuel delivery system. In addition, hot water supply temperatures are controlled to maintain the optimum digester temperature of approximately 100 ^{o}F. It was not possible during the verification testing to reach the power output levels or supply temperatures originally proposed without adversely affecting digester operations.

Instead, the center conducted the tests at nominal power output commands of 30, 38, and 45 kW. The heat recovery unit was set to operate under normal conditions to maintain digester temperature. At this condition, hot water supply temperatures were approximately 105 ^{o}F during the tests. Three replicate controlled load test runs were conducted at each of the three power output settings.

The controlled test periods were preceded by a 9-day period of extended monitoring to evaluate power and heat production and power quality over a range of ambient conditions and farm operations. During this period, site operators maintained typical IC engine operations as previously described. Specifically, the engine was run on biogas or natural gas intermittently as allowed by biogas production rates. In

addition, three short engine shutdown episodes occurred to allow for routine maintenance. More details regarding the engine operations during this period are provided in Section 2.0.

The specific verification parameters associated with the test are listed below. Brief discussions of each verification parameter and its method of determination are presented in Sections 1.4.1 through 1.4.5. Detailed descriptions of testing and analysis methods are provided in the test plan and not repeated here.

Heat and Power Production Performance

- Electrical power output and heat recovery rate at selected loads
- Electrical, thermal, and total system efficiency at selected loads

Power Quality Performance

- Electrical frequency
- Voltage output
- Power factor
- Voltage and current total harmonic distortion

Emissions Performance

- Nitrogen oxides (NO_X), carbon monoxide (CO), total hydrocarbons (THC), ammonia (NH_3), total reduced sulfur (TRS), total particulate matter (TPM), carbon dioxide (CO_2), and methane (CH_4) concentrations at selected loads
- NO_X, CO, THC, NH_3, TRS, TPM, CO_2, and CH_4 emission rates at selected loads
- Estimated NO_X and greenhouse gas emission reductions

Each of the verification parameters listed were evaluated during the controlled or extended monitoring periods as summarized in Table 1-2. This table also specifies the dates and time periods during which the testing was conducted.

Simultaneous monitoring for power output, heat recovery rate, heat input, ambient meteorological conditions, and exhaust emissions was performed during each of the controlled test periods. Manual samples of biogas were collected to determine fuel lower heating value and other gas properties. Replicate and average electrical power output, heat recovery rate, energy conversion efficiency (electrical, thermal, and total), and exhaust stack emission rates are reported for each test period.

Results from the extended test are used to report total electrical energy generated and used on site, total thermal energy recovered, greenhouse gas emission reductions, and electrical power quality. Greenhouse gas emission reductions for on-site electrical power generation are estimated using measured greenhouse gas emission rates and emissions estimates for electricity produced at central station power plants.

1.4.1. Heat and Power Production Performance

Electrical efficiency determination was based upon guidelines listed in ASME *Performance Test Code for Reciprocating Internal Combustion Engines*, PTC-17 [3], and was calculated using the average measured net power output, fuel flow rate, and fuel lower heating value (LHV) during each controlled test period. The fluid circulation pump that drives the hot water through the engine heat exchanger and digester heating loop is the only parasitic load for this CHP system. This verification did not include a separate measurement of this parasitic load, but evaluated electrical power output after the pump and therefore reports the net system efficiency (based on the usable power delivered by the system).

Table 1-2. Controlled and Extended Test Periods			
Controlled Test Periods			
Start Date, Time	**End Date, Time**	**Test Condition**	**Verification Parameters Evaluated**
02/10/04, 16:00	02/11/04, 14:30	Power command of 45 kW, three 60-minute test runs (120 minutes for TPM and NH_3)	NO_X, CO, SO_2, TRS, TPM, NH_3, CH_4, CO_2 emissions, and electrical, thermal, and total efficiency
02/11/04, 15:47	02/12/04, 16:07	Power command of 30 kW, three 60-minute test runs	NO_X, CO, SO_2, TRS, CH_4, CO_2 emissions, and electrical, thermal, and total efficiency
02/12/04, 16:45	02/13/04, 12:25	Power command of 38 kW, three 60-minute test runs	
Extended Test Period			
Start Date, Time	**End Date, Time**	**Test Condition**	**Verification Parameters Evaluated**
02/02/04, 10:30	02/11/04, 10:30	Engine operated as dispatched by farm operators	Total electricity generated; total heat recovered; power quality; and emission offsets

The electrical power output was measured continuously throughout the verification period using instrumentation provided and installed by the GHG Center. Heat input was determined by metering the fuel consumption and determining biogas energy content. Fuel gas sampling and energy content analysis (via gas chromatograph) was conducted according to ASTM procedures to determine the lower heating value of the biogas. Ambient temperature, relative humidity, and barometric pressure were measured near the engine air intake to support the determination of electrical conversion efficiency as required in PTC-17. Electricity conversion efficiency was computed by dividing the average electrical energy output by the average energy input using Equation 1.

$$\eta = \frac{3412.14\, kW}{HI} \qquad \text{(Equation. 1)}$$

where:

η = efficiency (%)

kW = average net electrical power output measured over the test interval (kW), (engine power output minus power consumed by circulation pump)

HI = average heat input using LHV over the test interval (Btu/hr); determined by multiplying the average mass flow rate of biogas to the system converted to standard cubic feet per hour (scfh) times the gas LHV (Btu per standard cubic foot, Btu/scf)

3412.14 = converts kW to Btu/hr

Simultaneous with electrical power measurements, heat recovery rate was measured using a heat meter (Controlotron Model 1010EP). The meter enabled 1-minute averages of differential heat exchanger temperatures and water flow rates to be monitored. Published fluid density and specific heat values for

water were used so that heat recovery rates could be calculated at actual conditions per ANSI/ASHRAE Standard 125 [4].

$$\textit{Heat Recovery Rate (Btu/min)} = V\rho\, C_p\, (T1\text{-}T2) \qquad \text{(Equation. 2)}$$

where:

V	=	total volume of liquid passing through the heat meter flow sensor during a minute (ft^3)
ρ	=	density of water solution (lb/ft^3), evaluated at the avg. temp. (T2 plus T1)/2
C_p	=	specific heat of water solution (Btu/lb ^oF), evaluated at the avg. temp. (T2 plus T1)/2
T1	=	temperature of heated liquid exiting heat exchanger (^oF), (see Figure 1-4)
T2	=	temperature of cooled liquid entering heat exchanger (^oF), (see Figure 1-4)

The average heat recovery rates measured during the controlled tests and the extended monitoring period represent the heat recovery performance of the CHP system. Thermal energy conversion efficiency was computed as the average heat recovered divided by the average energy input:

$$\eta_T = 60 * Q_{avg} / HI \qquad \text{(Equation. 3)}$$

where:

η_T	=	thermal efficiency (%)
Q_{avg}	=	average heat recovered (Btu/min)
HI	=	average heat input using LHV (Btu/hr); determined by multiplying the average mass flow rate of natural gas to the system (converted to scfh) times the gas LHV (Btu/scf)

Figure 1-5 illustrates the location of measurement variables contained in Equations 1 through 3. Power output was measured using a 7500 ION Power Meter (Power Measurements Ltd.) at a rate of approximately one reading every 8 to 12 milliseconds and logged on the center's data acquisition system (DAS) as 1-minute averages. The power meter was located in the main switchbox connecting the CHP to the host site and represented power delivered to the farm. The logged one-minute average kW readings were averaged over the duration of each controlled test period to compute electrical efficiency. The kW readings were integrated over the duration of the verification period to calculate total electrical energy generated in units of kilowatt hours (kWh).

Biogas fuel input was measured with an in-line Dresser-Roots Series B Model 3M175 rotary type displacement meter. Meter readings were recorded, manually at 10-minute intervals during the controlled test periods, and daily during the extended monitoring period. Gas temperature and pressure sensors were installed to enable flow rate compensation to provide mass flow output at standard conditions (60 ^oF, 14.696 psia).

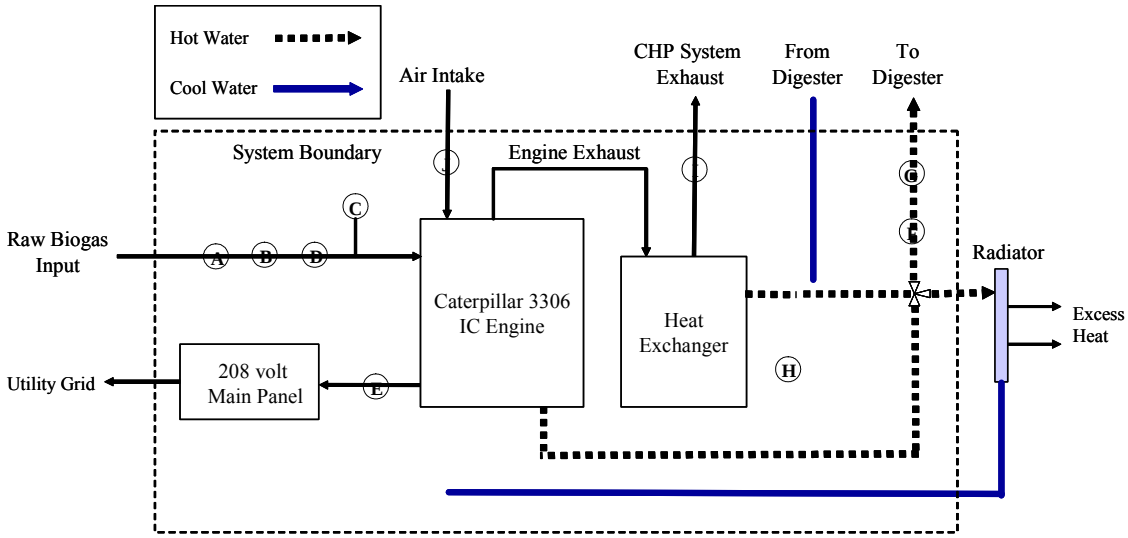

[redacted]

Figure 1-5. Schematic of Measurement System

A total of six biogas samples were collected and analyzed during the controlled test periods to determine gas composition and heating value. Samples were collected at a point in the biogas delivery line downstream of the meter and are representative of the IC engine fuel. All samples were submitted to Empact Analytical Systems, Inc., of Brighton, CO, for compositional analysis in accordance with ASTM Specification D1945 for quantification of methane (C1) to hexane plus (C6+), nitrogen, oxygen, and carbon dioxide [5]. The compositional data were then used in conjunction with ASTM Specification D3588 to calculate LHV and the relative density of the gas [6].

In addition to the ASTM D1945 compositional analyses, ASTM Method 5504 provided an extended analysis to quantify concentrations of H_2S [7]. This method is essentially an extension of the ASTM D1945 procedures that uses additional chromatographic columns to separate H_2S and heavier hydrocarbons.

A Controlotron Model 1010EP1 energy meter was used to monitor water flow rate and supply and return temperatures. This meter is a digitally integrated system that includes a portable computer, ultrasonic fluid flow transmitters, and 1,000-ohm platinum resistance temperature detectors (RTDs). The meter has an overall rated accuracy of ± 2 percent of reading and provides a continuous 4-20 mA output signal over a range of 0 to 200 gpm. The meter was installed in the 3-1/2-inch carbon steel water supply line.

The water flow rate and supply and return temperature data used to determine heat recovery rates were logged as one-minute averages throughout all test periods. The heat transfer fluid density and specific heat were determined by using ASHRAE and ASME density and specific heat values for water corrected to the average water temperature measured by the RTDs.

1.4.2. Power Quality Performance

The GHG Center and its stakeholders developed the following power quality evaluation approach to account for these issues. Three documents [8, 9, 10] formed the basis for selecting the power quality parameters of interest and the measurement methods used. The GHG Center measured and recorded the following power quality parameters during the extended monitoring period:

- Electrical frequency
- Voltage
- Voltage THD
- Current THD
- Power factor

The 7500 ION power meter used for power output determinations was used to perform these measurements as described below and detailed in the test plan. The ION power meter continuously measured electrical frequency at the generator's distribution panel. The DAS was used to record one-minute averages throughout the extended period. The mean, maximum, and minimum frequencies as well as the standard deviation are reported.

The CHP unit generates power at nominal 208 volts (AC). The electric power industry accepts that voltage output can vary within ± 10 percent of the standard voltage without causing significant disturbances to the operation of most end-use equipment. Deviations from this range are often used to quantify voltage sags and surges. The ION power meter continuously measured true root mean square (rms) line-to-line voltage at the generator's distribution panel for each phase pair. The DAS recorded one-minute averages for each phase pair throughout the extended period as well as the average of the three phases. The mean, maximum, and minimum voltages, as well as the standard deviation for the average of the three phases are reported.

THD is created by the operation of non-linear loads. Harmonic distortion can damage or disrupt many kinds of industrial and commercial equipment. Voltage harmonic distortion is any deviation from the pure AC voltage sine waveform. THD gives a useful summary view of the generator's overall voltage quality. The specified value for total voltage harmonic is a maximum THD of 5.0 percent based on "recommended practices for individual customers" in the IEEE 519 Standard. The ION meter continuously measured voltage THD up to the 63rd harmonic for each phase. The DAS recorded one-minute voltage THD averages for each phase throughout the test period and reported the mean, minimum, maximum, and standard deviation for the average THD for the three phases.

Current THD is any distortion of the pure current AC sine waveform. The current THD limits recommended in the IEEE 519 standard range from 5.0 to 20.0 percent, depending on the size of the CHP generator, the test facility's demand, and its distribution network design as compared to the capacity of the local utility grid. Detailed analysis of the facility's distribution network and the local grid are beyond the scope of this verification. The GHG Center, therefore, reported current THD data without reference to a particular recommended THD limit. The ION power meter, as with voltage THD, continuously measured current THD for each phase and reported the average, minimum, and maximum values for the period.

The ION power meter also continuously measured average power factor across each generator phase. The DAS recorded one-minute averages for each phase during all test periods. The GHG Center reported maximum, minimum, mean, and standard deviation power factors averaged over all three phases.

1.4.3. Emissions Performance

Pollutant concentration and emission rate measurements for NO_X, CO, TRS, CH_4, and CO_2 were conducted on the engine exhaust stack during all of the controlled test periods. Testing for determination of TPM and NH_3 was conducted at the 45 kW power command only. THC concentrations, likely impacted by operating the engine below recommended load, exceeded the analyzer's highest selectable range of 10,000 ppm at all test conditions and therefore, the THC analyses could not be completed. CO concentrations were also very high and the analyzer was configured to a range of 0 to 10,000 ppm.

Emissions testing coincided with the efficiency determinations described earlier. Test procedures used were U.S. EPA reference methods, which are well documented in the Code of Federal Regulations (CFR). The reference methods include procedures for selecting measurement system performance specifications and test procedures, quality control procedures, and emission calculations (40CFR60, Appendix A) [11]. Table 1-3 summarizes the standard test methods that were followed. A complete discussion of the data quality requirements {for example, NO_X analyzer interference test, nitrogen dioxide [NO_2] converter efficiency test, sampling system bias and drift tests} is presented in the test plan.

Table 1-3. Summary of Emissions Testing Methods

Pollutant	EPA Reference Method	Analyzer Type	Range
NO_X	7E	California Analytical Instruments (CAI) 400-CLD (chemiluminescense)	0 – 1,000 ppm
CO	10	TEI Model 48 (NDIR)	0 – 10,000 ppm
SO_2	6C	Bovar 721-AT (NDUV)	0 – 1,000 ppm
THC	25A	JUM Model 3-300 (FID)	0 – 10,000 ppm
CH_4	18	Hewlett-Packard 5890 GC/FID	0 – 25,000 ppm
CO_2	3A	CAI 200 (NDIR)	0 – 25%
O_2	3A	CAI 200 (electrochemical)	0 – 25%
TRS	EPA 16A	Ametek 921 White Cell (NDUV)	0 – 1,000 ppm
NH_3	BAAQMD ST-1B	Ion Specific Electrode	Not specified
TPM	EPA 5	Gravimetric	Not specified

Emissions testing was conducted by Cubix Corporation of Austin, Texas under the on-site supervision of the GHG Center field team leader. A detailed description of the sampling system used for each parameter listed is provided in the test plan and is not repeated in this report. Sampling was conducted during each test for approximately 60 minutes at a single point near the center of the 3-inch diameter stack (120 minutes for TPM and NH_3). Results of the gaseous pollutant testing are reported in units of parts per million volume dry (ppmvd) and ppmvd corrected to 15-percent O_2. Concentrations of TPM are reported in units of grains per standard cubic foot (gr/dscf).

To convert measured pollutant concentrations to mass emissions, exhaust gas flow rate determinations were conducted during each test run in accordance with EPA Method 2C. Stack gas velocity and

temperature traverses were conducted using a calibrated thermocouple, a standard pitot tube, and an inclined oil manometer. The number and location of traverse points sampled was selected in accordance with EPA Method 1A due to the small diameters of this stack. Separate ports were located downstream of the sampling location (2 diameters) to allow velocity traversing to occur simultaneously with the sampling. At the conclusion of each test run, equations specified in the reference methods were used to calculate exhaust gas velocity, actual volumetric flow rate, and volumetric flow rate at standard conditions.

After converting measured pollutant concentrations to mass units of lb/dscf, emission rate values were calculated in units of lb/hr using the standardized volumetric flow rates. The mean of the three test results at each load factor is reported as the average emission rate for that load factor. Emission rates for each pollutant are then normalized to system power output and reported in terms of lb/kWh.

1.4.4. Estimated Annual Emission Reductions

The electric energy generated by the IC engine offsets electricity otherwise supplied by the utility grid. Consequently, the reduction in electricity demand from the grid caused by this offset will result in changes in CO_2 and NO_X emissions associated with producing an equivalent amount of electricity at central power plants. If the CHP emissions per kWh are less than the emissions per kWh produced by an electric utility, it can be inferred that a net reduction in emissions will occur at the site. If the emissions from the on-site generators are greater than the emissions from the grid, possibly due to the use of higher efficiency power generation equipment or zero emissions generating technologies (nuclear and hydroelectric) at the power plants, a net increase in emissions may occur. Emission reductions associated with heat recovery were not conducted, as this process requires baseline GHG emission assessment from standard waste management practices. Due to the significant resources required to do this, OEMC elected to verify emission reductions from electricity generation only.

Emissions from the IC engine scenario for this verification are compared with the baseline scenario (utility grid) to estimate annual NO_X and CO_2 emission levels and reductions (lb/yr). Reliable emission factors for the electric utility grid are available for both gases. Emission reductions were computed as follows:

$$\text{Reduction (lbs)} = E_{GRID} - E_{CHP} \qquad \text{(Equation. 4)}$$

$$\text{Reduction (\%)} = (E_{GRID} - E_{CHP})/E_{GRID} * 100$$

Where:

Reduction	=	Estimated annual emission reductions from on-site electricity generation, lbs or %
E_{CHP}	=	Estimated annual emissions from IC engine, lbs (Section 2.5.1)
E_{GRID}	=	Estimated annual emissions from utility grid, lbs

The following describes the methodology used.

<u>Step 1 - Estimation of IC engine CO_2 and NO_X Emissions</u>

The first step in calculating emission reductions was to estimate the emissions associated with generating electricity with biogas at the site over a given period of time (one year), operating at normal site conditions (45 kW). Based on the total electrical generation over the nine-day monitoring period

(extrapolated to a one-year period), and the measured emission rates, the IC engine emissions can be estimated as follows:

$$E_{CHP} = ER_{CHP} * kWh_{CHP} \qquad \text{(Equation. 5)}$$

Where:

E_{CHP} = Estimated annual emissions from IC engine at 45 kW load, lbs (Section 1.4.4)

ER_{CHP} = Engine CO_2 or NO_X emission rate at 45 kW, lb/kWh

kWh_{CHP} = Total annual electrical energy generated at the site, kWh

Step 2 – Estimation of Grid Emissions

The host facility's utility provider is the Southeast Colorado Power Association (SECPA) with headquarters in La Junta, Colorado. Energy Information Administration data [12] indicate that SECPA does not generate any electricity; it distributes and resells utility and non-utility power from other vendors. Because of this, information which could identify specific generating units (GUs) which would be offset by power generated at the host facility is not publicly available.

This verification, therefore, compares the IC engine emissions to aggregated emission data for the three major types of fossil fuel-fired power plants: coal, petroleum, and natural gas. The GHG Center employed well-recognized data from DOE and the Energy Information Administration (EIA) for the computations. These data consist of the total emissions and total power generated for each fuel type and are available for the nationwide and Colorado power grids. Total emissions divided by total generated power for each of these geographical regions yields the emission rate in lb/kWh for CO_2 and NO_X for each fuel. The emission rate multiplied by the percent power generated by each fuel yields the weighted emission rate, and the sum of the weighted emission rates is the overall emission rate for each region. The following table presents the resulting emission rates for 1999.

Table 1-4. CO_2 and NO_X Emission Rates for Two Geographical Regions

Region	Fuel	Percent of Fossil Fuel Total	CO_2 lb/kWh	Weighted CO_2 lb/kWh	NO_X lb/kWh	Weighted NO_X lb/kWh
Nationwide	coal	82.2	2.150	1.767	0.00741	0.00609
	petroleum	4.0	1.734	0.070	0.00283	0.00011
	gas	13.8	1.341	0.185	0.00254	0.00035
			Total Weighted CO_2 lb/kWh	**2.022**	**Total Weighted NO_X lb/kWh**	**0.00655**
Colorado	coal	94.0	2.193	2.061	0.00804	0.00756
	petroleum	0.1	1.812	0.002	n/a	0
	gas	5.9	1.114	0.066	0.00293	0.00017
			Total Weighted CO_2 lb/kWh	**2.129**	**Total Weighted NO_X lb/kWh**	**0.00773**

Estimated power grid emissions for equivalent power production, therefore, are based on the annual estimated kilowatt-hours generated by the on-site CHP system, line losses, and the grid emission rates for CO_2 or NO_X as shown in Equation 6.

$$E_{GRID} = kWh_{CHP} * ER_{GRID} * 1.114 \qquad \text{(Equation. 6)}$$

Where:

E_{GRID} = Annual grid CO_2 or NO_X emissions, lbs
kWh_{CHP} = annual engine power generated, kWh
ER_{GRID} = CO_2 or NO_X emission rates from Table 1-4, lb/kWh
1.114 = Total T&D losses

Step 3 – Estimation of Emissions Offsets

Emissions offsets are then estimated (using equation 4) as the difference between the calculated emissions resulting from the production of the quantity of power produced on site by the CHP system (grid emission), and the calculated emissions from the CHP system for the same quantity of power produced, on an annual basis.

2.0 VERIFICATION RESULTS

2.1. OVERVIEW

The verification period started on February 2, 2004, and continued through February 13, 2004. The controlled tests were conducted on February 11 through 13, and were preceded by a nine-day period of continuous monitoring to examine heat and power output, power quality, efficiency, and emission reductions. Test results are representative of engine operations at this site only. Heat and power production performance and particularly CO and THC emissions performance were likely negatively impacted by operating the engine below manufacturer's minimum rating.

The GHG Center acquired several types of data that represent the basis of verification results presented here. The following types of data were collected and analyzed during the verification:

- Continuous measurements (biogas pressure, biogas temperature, power output and quality, heat recovery rate, and ambient conditions)
- Manual biogas flow meter readings
- Biogas compositional data
- Emissions testing data
- CHP and facility operating data

The field team leader reviewed, verified, and validated some data, such as DAS file data and reasonableness checks while on site. The team leader reviewed collected data for reasonableness and completeness in the field. The data from each of the controlled test periods was reviewed on site to verify that PTC-17 variability criteria were met. The emissions testing data was validated by reviewing instrument and system calibration data and ensuring that those and other reference method criteria were met. Calibrations for fuel flow, pressure, temperature, electrical and thermal power output, and ambient monitoring instrumentation were reviewed on site to validate instrument functionality. Other data such as fuel LHV analysis results were reviewed, verified, and validated after testing had ended. All collected data was classed as either valid, suspect, or invalid upon review, using the QA/QC criteria specified in the test plan. Review criteria are in the form of factory and on-site calibrations, maximum calibration and other errors, audit gas analyses results, and lab repeatability results. Results presented here are based on measurements which met the specified Data Quality Indicators (DQIs) and QC checks and were validated by the GHG Center.

The continuous monitoring days listed above include periods when the unit was operating under normal site conditions. The GHG Center has made every attempt to obtain a reasonable set of short-term data to examine daily trends in atmospheric conditions, electricity and heat production, and power quality. It should be noted that these results may not represent performance over longer operating periods or at significantly different operating conditions.

As described earlier, under typical IC engine operations the engine will be periodically run on biogas or natural gas, and short term shut downs for routine maintenance are common. These typical operations were observed during the 9-day monitoring period as illustrated in Figure 2-1. Unshaded areas in the figure highlight the time periods when the engine was operating on biogas. The shaded areas in the figure represent periods when the engine was either shut down (indicated by breaks in the power output plot), or running on natural gas. The biogas temperature plot was used to determine the time periods when this occurred. When the engine operates on natural gas, the biogas flow past the temperature sensor stops and

the gas temperature drops. Periods where the biogas temperature is consistently above 70 °F indicate the periods of time when the engine was firing biogas.

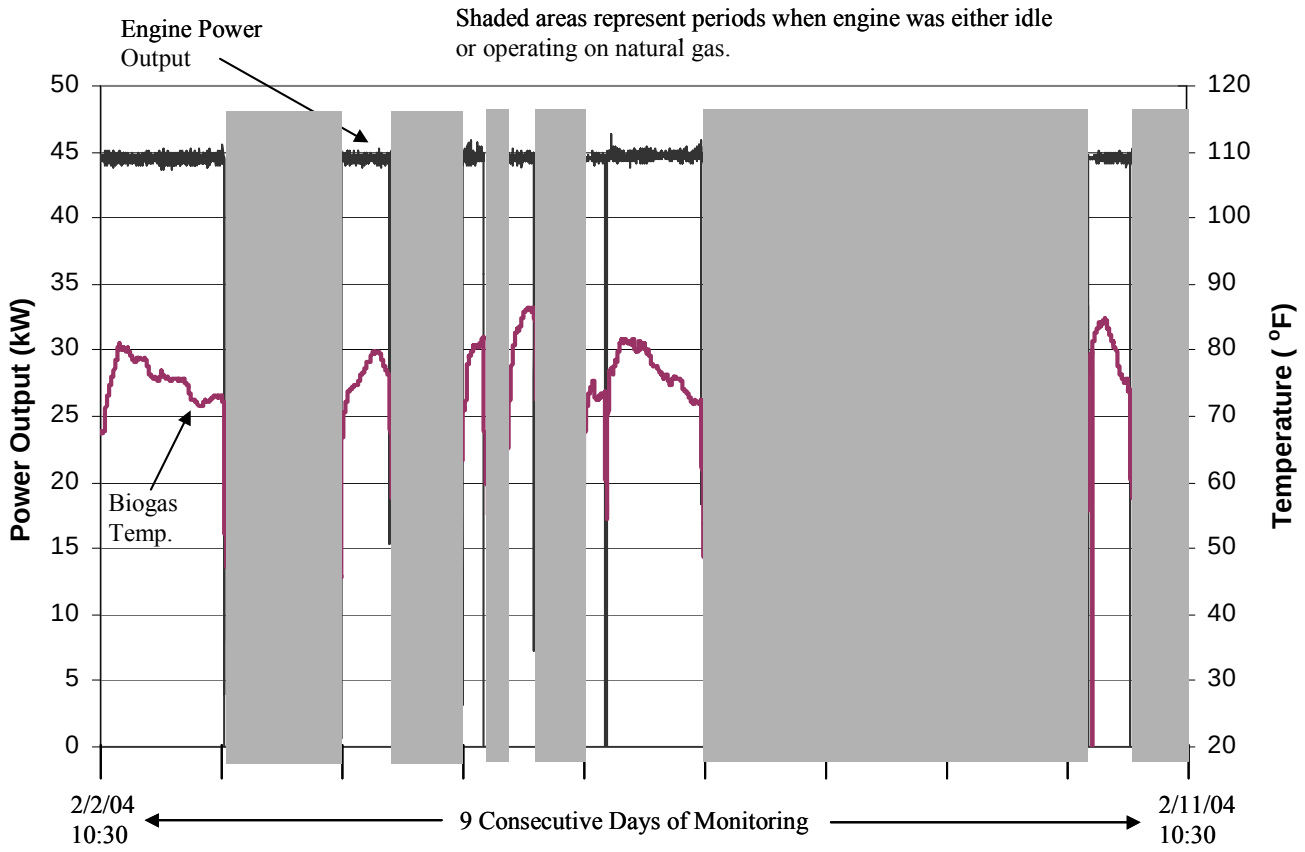

Figure 2-1. Engine Operations During the Extended Monitoring Period

Figure 2-1 includes a total of 216 hours of monitoring. During that period, the engine was running on biogas at a nominal output of 45 kW for a total of 75.3 hours (about 35 percent of the time). The engine ran on natural gas for a total of 188.9 hours (or about 55 percent of the time). The engine was down the remainder of the time (21.8 hours). Results of the extended monitoring period presented in the following sections are based solely on the 75.3 hours during which the engine was running on biogas. Data collected while operating on natural gas are not included in this report.

Test results are presented in the following subsections:

Section 2.1 – Heat and Power Production Performance
(controlled test periods and extended monitoring)
Section 2.2 – Power Quality Performance
(extended monitoring)
Section 2.3 – Emissions Performance and Reductions
(controlled test periods)

The results show that the CHP system produces high quality power and is capable of operating in parallel with the utility grid. The unit produced a steady 45 kW of electrical power throughout the extended

monitoring period. The highest heat recovery rate measured during the extended monitoring period was approximately 277 x 10^3 Btu/hr. Electrical and thermal efficiencies at 45 kW averaged 19.7 and 32.4 percent, respectively, with a corresponding total CHP system efficiency of 52.1 percent. It is likely that these efficiencies might improve should site conditions allow the engine to operate at its full design capacity. NO_X emissions averaged 0.012 lb/kWh at 45 kW. Emissions of CO and hydrocarbons were very high during all test periods. Annual NO_X emissions are estimated to be at least 55 percent higher than the average grid emissions. CO_2 emission reductions are estimated to be at least 2.2 percent. Detailed analyses are presented in the following sections.

In support of the data analyses, the GHG Center conducted an audit of data quality (ADQ) following procedures specified in the QMP. A full assessment of the quality of data collected throughout the verification period is provided in Section 3.0.

2.2. HEAT AND POWER PRODUCTION PERFORMANCE

The heat and power production performance evaluation included electrical power output, heat recovery, and CHP efficiency determinations during controlled test periods. The performance evaluation also included determination of total electrical energy generated and used and thermal energy recovered over the extended test period.

2.2.1. Electrical Power Output, Heat Recovery Rate, and Efficiency During Controlled Tests

Table 2-1 summarizes the power output, heat recovery rate, and efficiency performance of the CHP system. Ambient temperature ranged from 35 to 56 ^oF, relative humidity ranged from 20 to 48 percent, and barometric pressure was between 12.70 and 12.83 psia during the controlled test periods. The results shown in Table 2-1 and the discussion that follows are representative of conditions encountered at this site and are not intended to indicate performance at other operating conditions such as cooler temperatures and different elevations.

Biogas fuel conditions and heat recovery unit operation data corresponding to the test results are summarized in Table 2-2. A total of 12 samples were collected for compositional analysis and determination of LHV. There was very little variability in the biogas composition. Average biogas CH_4 and CO_2 concentrations were 68.1 and 31.2 percent, respectively. The average LHV was 625 Btu/scf and biogas compressibility averaged 0.997. H_2S concentrations in the biogas averaged 3,730 ppm.

The average net electrical power delivered to the farm was 44.7 kW_e at the highest achievable load setting. The average electrical efficiency at this power command was 19.7 percent. Electrical efficiencies at the 38 and 30 kW power commands averaged 17.1 and 13.8 percent, respectively. Electric power generation heat rate, which is an industry-accepted term to characterize the ratio of heat input to electrical power output, averaged 17,320 Btu/kWh_e at the 45 kW setting.

The average heat-recovery rate at the 45 kW power command was 250 x 10^3 Btu/hr, or 73.3 kW_{th}, and thermal efficiency was 32.4 percent. Results of three runs indicated that the total efficiency (electrical and thermal combined) was 52.1 percent at this condition. The net heat rate, which includes energy from heat recovery, was 6,549 Btu/kWh.

Table 2-1. Engine CHP Heat and Power Production Performance

Test ID	Test Condition	Heat Input, HI (10^3Btu/hr)	Electrical Power Generation Performance		Heat Recovery Performance		Total CHP System Efficiency (%)	Ambient Conditions [c]	
			Power Delivered[a] (kW)	Efficiency (%)	Heat Recovery Rate [b] (10^3Btu/hr)	Thermal Efficiency (%)		Temp (^{o}F)	RH (%)
Run 1	45 kW power command	751	44.6	20.3	275	36.6	56.8	55.9	20.3
Run 2		789	44.7	19.2	238	30.2	49.6	47.5	38.9
Run 3		783	44.7	19.5	238	30.4	49.9	47.4	35.7
Avg.		**774**	**44.7**	**19.7**	**250**	**32.4**	**52.1**	**50.3**	**31.6**
Run 4	30 kW power command	705	29.7	14.4	207	29.4	43.8	42.7	48.1
Run 5		744	29.6	13.6	226	30.4	43.9	37.7	32.6
Run 6		743	29.5	13.5	225	30.3	43.8	38.7	31.3
Avg.		**731**	**29.6**	**13.8**	**219**	**30.0**	**43.8**	**39.7**	**37.3**
Run 7	38 kW power command	768	37.5	16.6	225	29.3	46.0	34.9	33.9
Run 8		742	37.6	17.3	233	31.4	48.7	38.8	30.1
Run 9		740	37.6	17.3	224	30.3	47.6	43.4	29.8
Avg.		**750**	**37.5**	**17.1**	**227**	**30.3**	**47.4**	**39.0**	**31.3**

[a] Represents actual power available for consumption at the test site.
[b] Divide by 3.412 to convert to equivalent kilowatts (kW_{th}).
[c] Barometric pressure remained relatively consistent throughout the test runs (12.70 to 12.83 psia).

Table 2-2. Engine CHP Fuel Input and Heat Recovery Unit Operating Conditions

Test ID	Test Condition	Biogas Fuel Input				Heating Loop Fluid Conditions			
		Gas Flow Rate (scfm)	LHV (Btu/scf)	Gas Pressure (psia)	Gas Temp (^oF)	Fluid Flow Rate, V (gpm)	Outlet Temp., T1 (^oF)	Inlet Temp., T2 (^oF)	Temp. Diff. (^oF)
Run 1	45 kW power command	20.3	616.4	13.7	82.2	118.2	106.5	101.8	4.68
Run 2		21.2	621.1	13.7	75.1	117.6	105.3	101.2	4.09
Run 3		21.0	621.1	13.7	75.4	117.7	105.3	101.2	4.07
Avg.		**20.8**	**619.5**	**13.7**	**77.6**	**117.8**	**105.7**	**101.4**	**4.28**
Run 4	30 kW power command	18.9	621.1	13.8	75.5	118.2	103.8	100.3	3.53
Run 5		19.8	628.0	13.8	70.4	117.8	104.4	100.6	3.86
Run 6		19.7	628.0	13.8	71.0	117.9	104.4	100.6	3.84
Avg.		**19.5**	**625.7**	**13.8**	**70.0**	**118.0**	**104.2**	**100.5**	**3.74**
Run 7	38 kW power command	20.4	628.0	13.8	67.6	118.1	103.8	99.2	3.84
Run 8		19.7	627.0	13.7	70.0	118.0	104.0	100.0	3.98
Run 9		19.7	627.0	13.7	72.5	118.0	103.7	99.8	3.83
Avg.		**19.9**	**627.3**	**13.7**	**70.0**	**118.0**	**103.8**	**99.7**	**3.88**

Results of the reduced load tests are also included in the tables. Results show that electrical efficiency decreases as the power output is reduced. Thermal efficiency, however, was relatively consistent throughout the range of operation tested. This is illustrated in Figure 2-2 which displays the electrical and thermal system efficiency for each of the controlled test conditions.

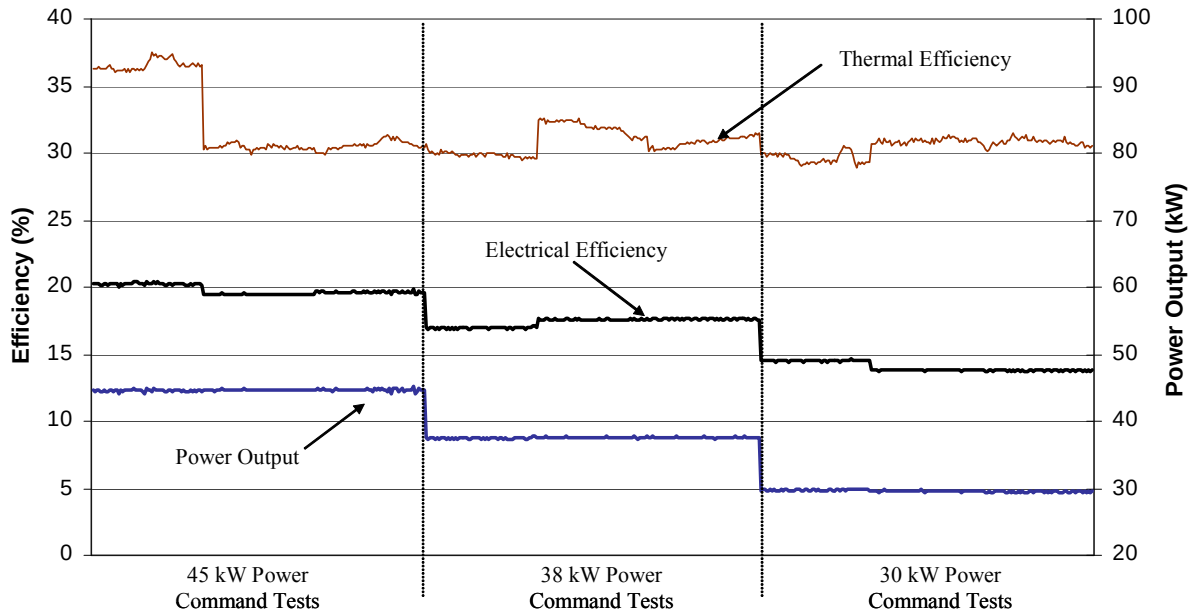

Figure 2-2. CHP System Efficiency During Controlled Test Periods

The figure shows the decrease in electrical efficiency at lower loads, and the relative stability of heat recovery efficiency regardless of power output. Although not verified, Figure 2-2 further suggests that electrical efficiency would improve at higher operating set points closer to the rated output of the engine. The high heat recovery efficiency measured during the first test run is the result of a larger temperature differential between the supply and return lines than what was normally seen. Although this test run was conducted at significantly warmer ambient temperatures than the others, a true relationship between ambient temperature and heat recovery rate is not evident (see results of extended monitoring in Section 2.2.2 below).

2.2.2. Electrical and Thermal Energy Production and Efficiency During the Extended Test Period

Figure 2-3 presents a time series plot of 1-minute average power production and heat recovery during the extended verification period. As described earlier, although the extended monitoring period spanned nine full days, the engine was operating on biogas for only about 75 hours during the period. Data presented here includes only those time periods.

A total of 3,358 kWh_e electricity and 5,232 kWh_{th} of thermal energy (or 17,850 x 10^3 Btu) were generated from biogas over the nine-day period. All of the electricity and heat generated was used by the facility. The average power generated over the extended period was 44.6 kW_e with very little variability in the engine's generating rate.

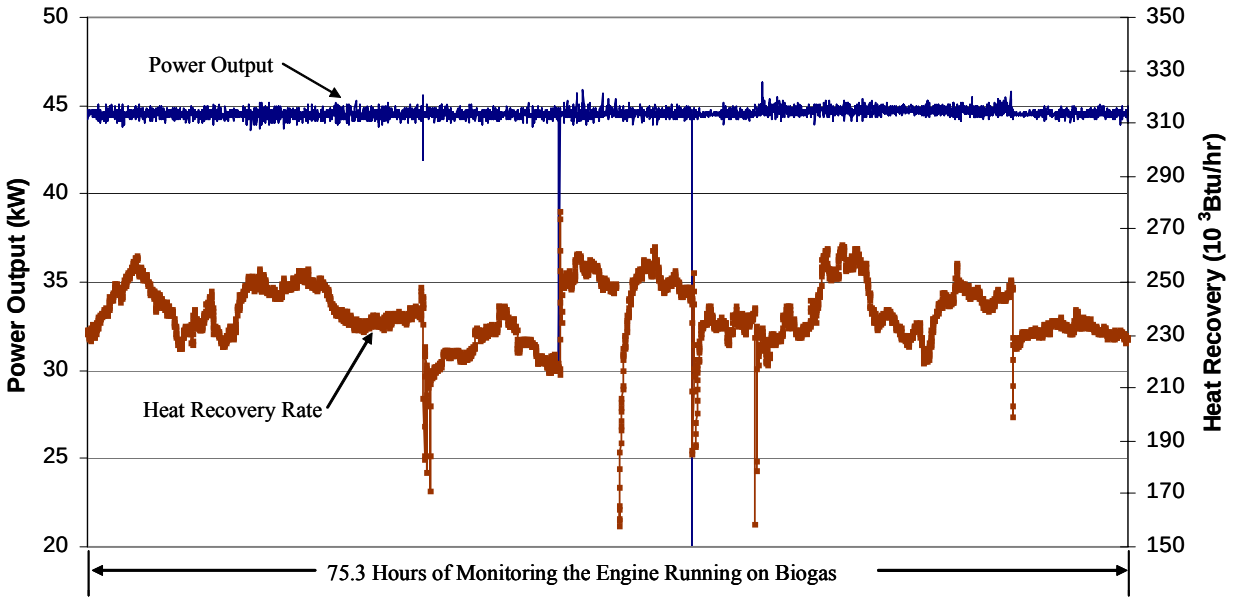

Figure 2-3. Heat and Power Production During the Extended Monitoring Period

Three reverse spikes in power output are shown in the figure. Each of these reductions in power output were two minutes or less in duration with the largest being a quick drop to 7 kW. The cause of these reductions is not known. Review of other parameters monitored by the center indicate steady CHP system operations when these reductions occurred. The average heat recovery rate over the extended period was 237.9 x 10^3 Btu/hr. The heat recovery rate data does exhibit some variability, but the source of the variability is not clear based on other data collected during the period. No changes in power output were observed, and there is not a clear relationship with ambient temperature (Figure 2-4).

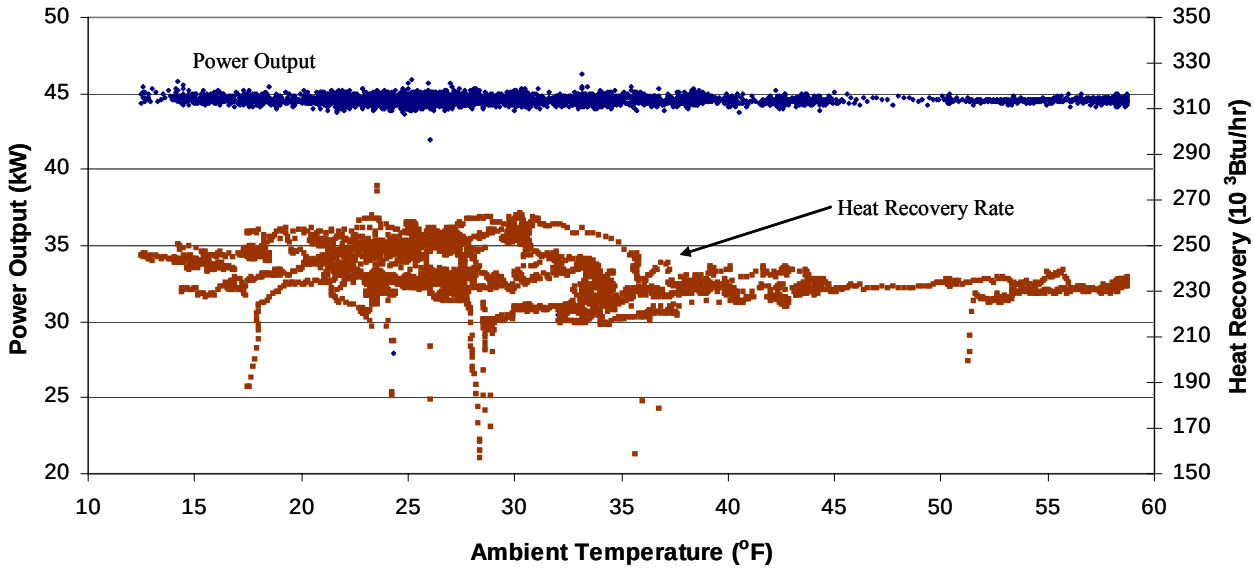

Figure 2-4. Ambient Temperature Effects on Power and Heat Production

2.3. POWER QUALITY PERFORMANCE

2.3.1. Electrical Frequency

Electrical frequency measurements (voltage and current) were monitored continuously during the extended period. The one-minute average data collected by the electrical meter were analyzed to determine maximum frequency, minimum frequency, average frequency, and standard deviation for the verification period. These results are summarized in Table 2-3 and illustrated in Figure 2-5. The average electrical frequency measured was 59.998 Hz and the standard deviation was 0.022 Hz.

Table 2-3. Electrical Frequency During Extended Period

Parameter	Frequency (Hz)
Average Frequency	59.998
Minimum Frequency	58.660
Maximum Frequency	60.048
Standard Deviation	0.022

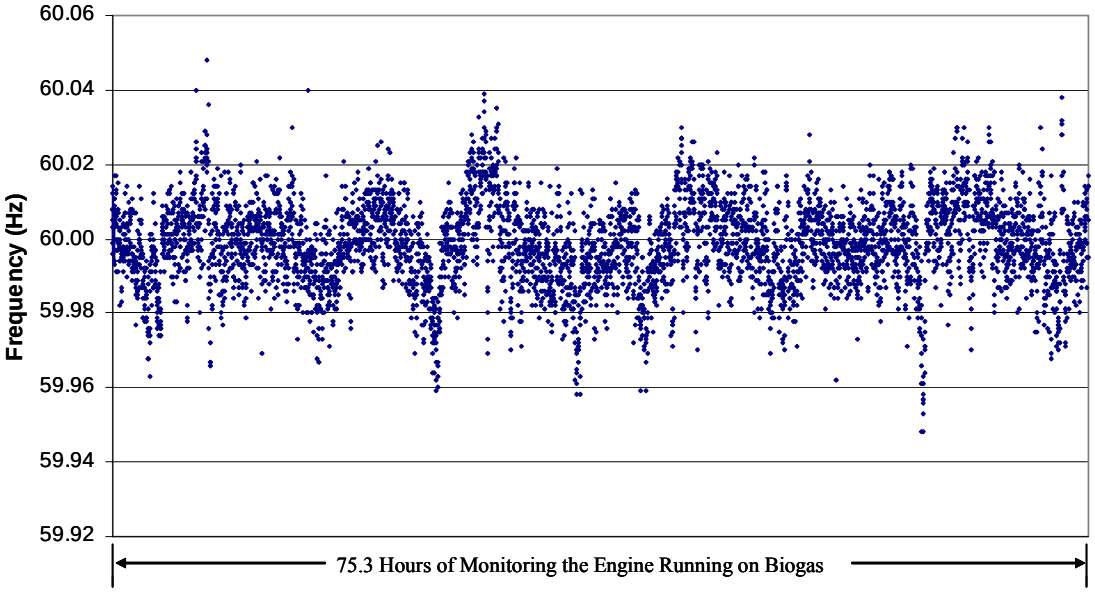

Figure 2-5. IC Engine Frequency During Extended Test Period

2.3.2. Voltage Output

It is typically accepted that voltage output can vary within ± 10 percent of the standard voltage (208 volts) without causing significant disturbances to the operation of most end-use equipment. The 7500 ION electric meter was configured to measure 0 to 600 VAC. The engine was grid-connected and operated as

a voltage-following current source. The voltage levels measured are, therefore, more indicative of the grid voltage levels that the engine tried to respond to.

Figure 2-6 plots one-minute average voltage readings and Table 2-4 summarizes the statistical data for the voltages measured on the engine throughout the verification period. The voltage levels were well within the normal accepted range of ± 10 percent.

Table 2-4. IC Engine Voltage During Extended Period

Parameter	Volts
Average Voltage	208.63
Minimum Voltage	204.65
Maximum Voltage	210.72
Standard Deviation	1.10

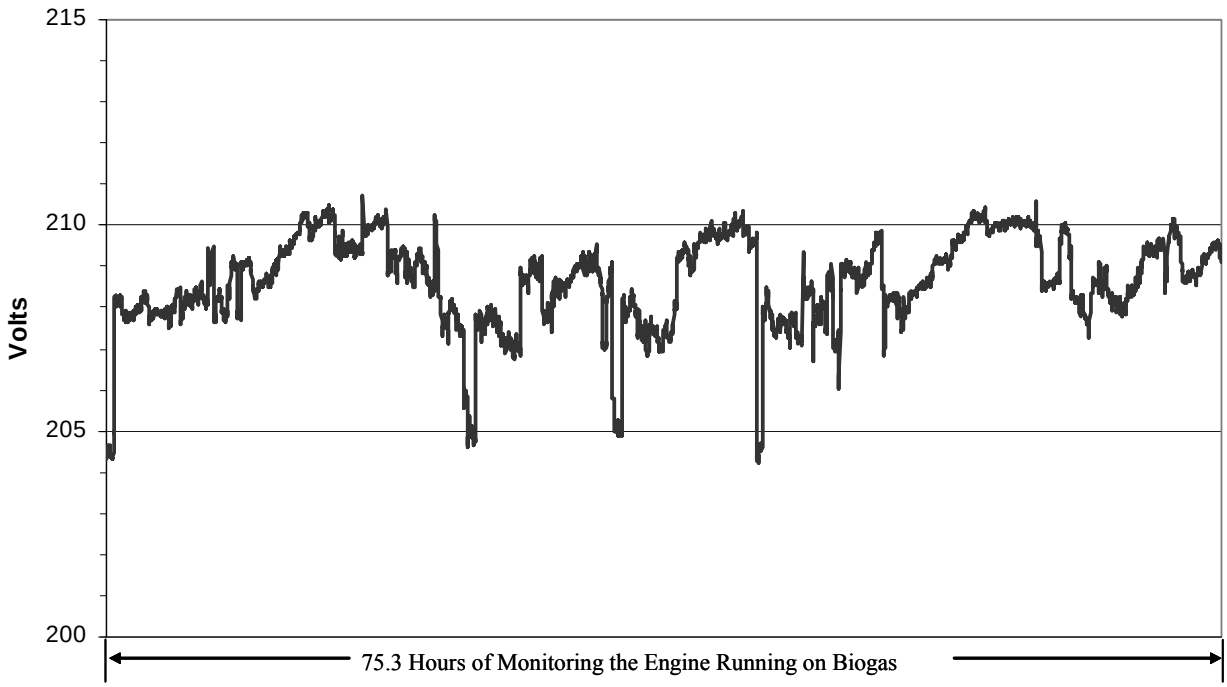

Figure 2-6. IC Engine Voltage During Extended Test Period

2.3.3. Power Factor

Figure 2-7 plots one-minute average power factor readings and Table 2-5 summarizes the statistical data for power factors measured on the engine throughout the verification period except during the three reverse spikes in power output. Test results show that the power factor was very stable throughout the period.

Table 2-5. Power Factors During Extended Period	
Parameter	**%**
Average Power Factor	79.74
Minimum Power Factor	71.34
Maximum Power Factor	82.71
Standard Deviation	0.338

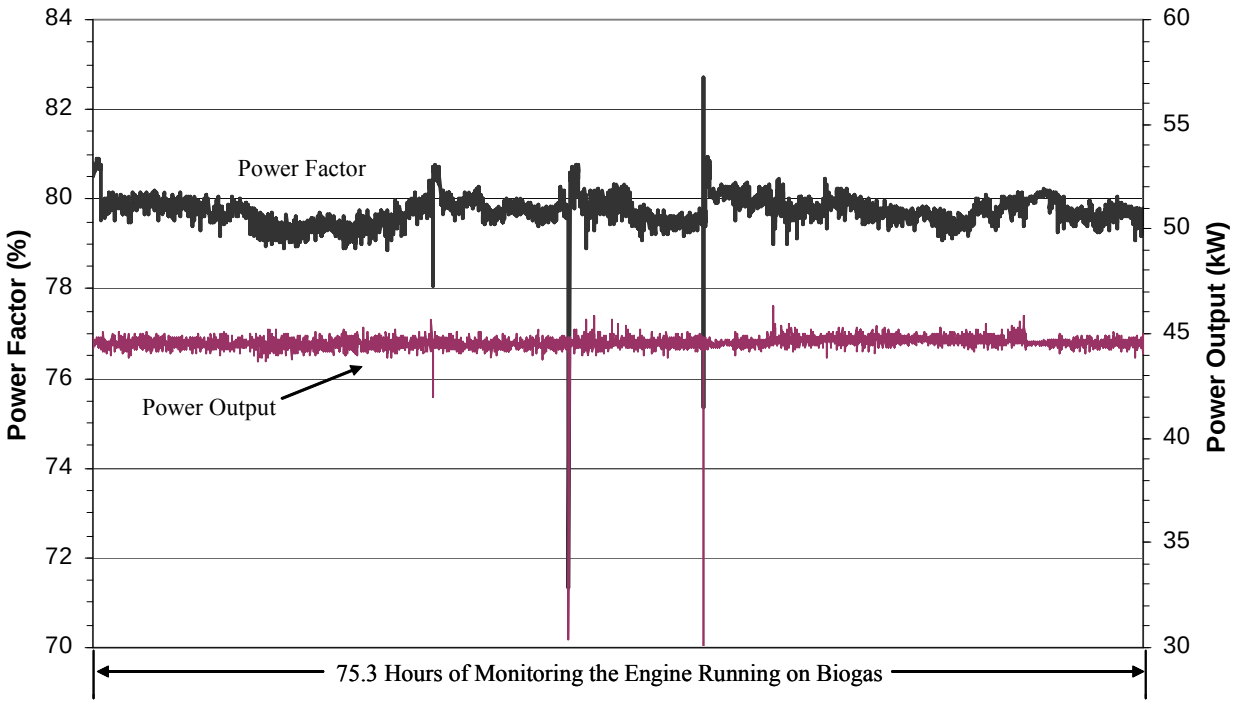

Figure 2-7. IC Engine Power Factor During Extended Test Period

2.3.4. Current and Voltage Total Harmonic Distortion

The engine total harmonic distortion, up to the 63rd harmonic, was recorded for current and voltage output using the 7500 ION. The average current and voltage THD were measured to be 5.23 percent and 0.92 percent, respectively (Table 2-6). Figures 2-8 and 2-9 plot the current and voltage THD throughout the extended verification period. Results indicate that the average current THD slightly exceeds the IEEE 519 specification of ± 5 percent. The spikes in current THD occurred during each of the three dips in power output.

Table 2-6. IC Engine THD During Extended Period		
Parameter	**Current THD (%)**	**Voltage THD (%)**
Average	5.23	0.92
Minimum	1.45	0.51
Maximum	10.7	10.8
Standard Deviation	1.32	0.26

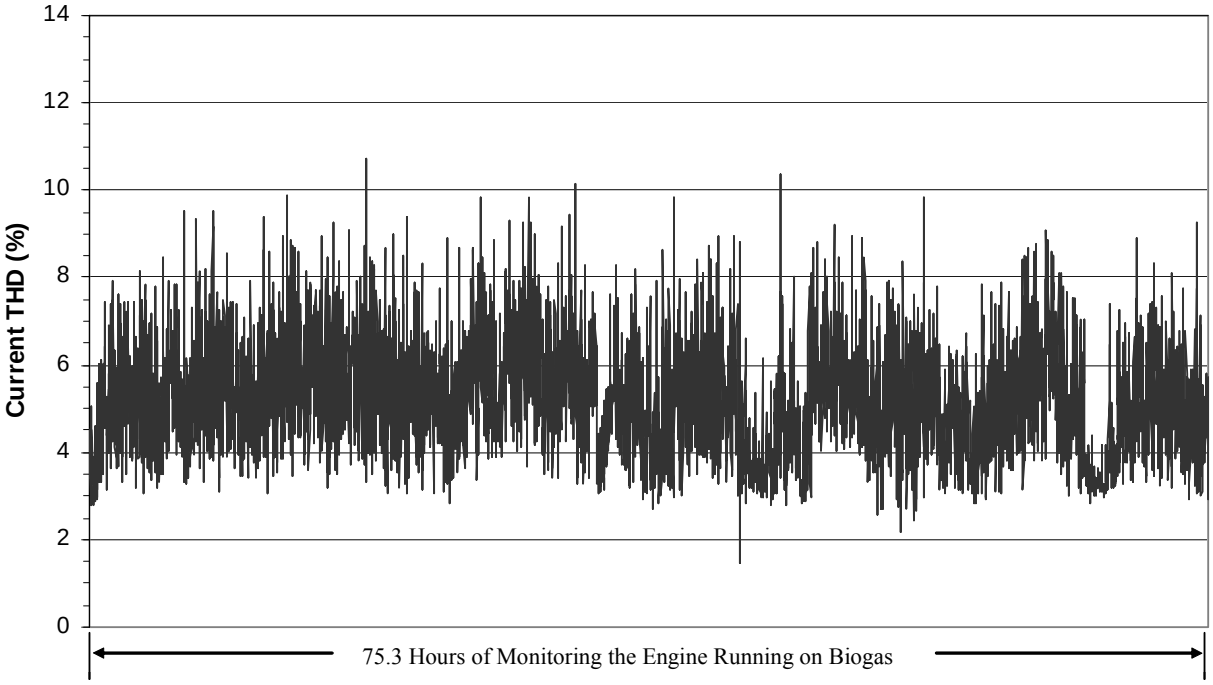

Figure 2-8. IC Engine Current THD During Extended Test Period

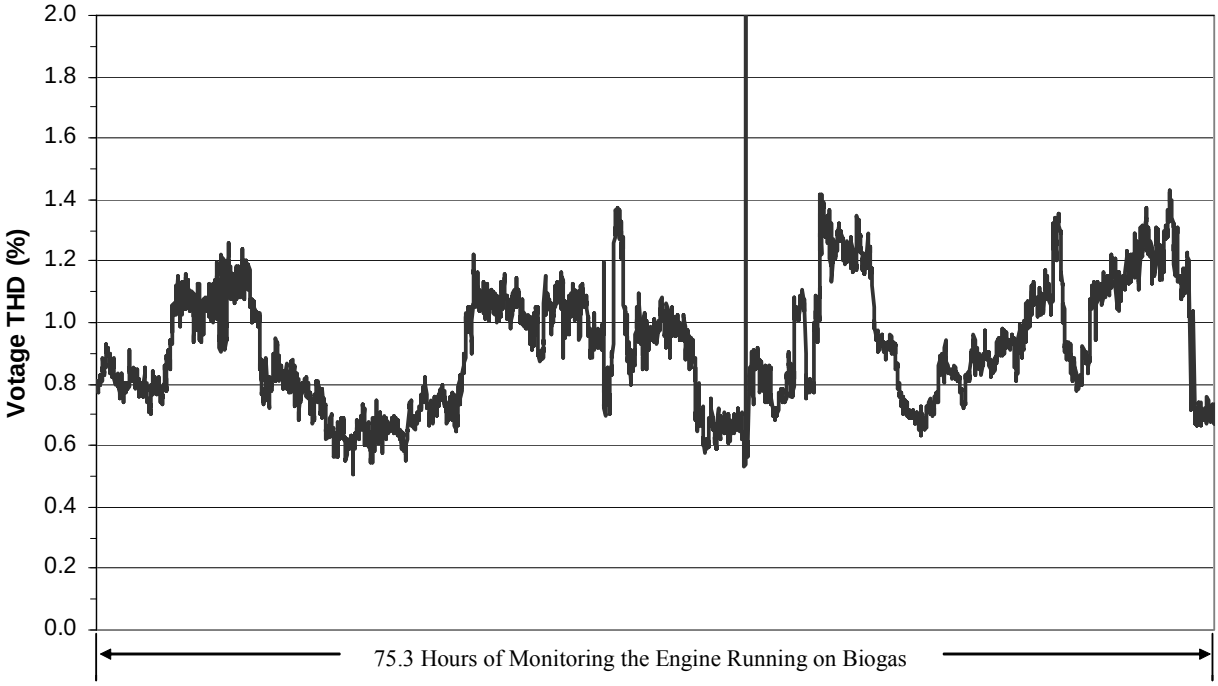

Figure 2-9. IC Engine Voltage THD During Extended Test Period

2.4. EMISSIONS PERFORMANCE

2.4.1. CHP System Stack Exhaust Emissions

Stack emission measurements were conducted during each of the controlled test periods summarized in Table 1-2. All testing was conducted in accordance with the EPA reference methods listed in Table 1-3. The CHP system was maintained in a stable mode of operation during each test run based on PTC-17 variability criteria.

Emissions results are reported in units of parts per million volume dry, corrected to 15-percent O_2 (ppmvd at 15-percent O_2) for NO_X, CO, SO_2, TRS, NH_3, and THC. Concentrations of CO_2 are reported in units of volume percent, and TPM concentrations are reported as grains per dry standard cubic foot (gr/dscf). These pollutant concentration data were converted to mass emission rates using measured exhaust stack flow rates and are reported in units of pounds per hour (lb/hr). The emission rates are also reported in units of pounds per kilowatt hour electrical output (lb/kWh_e). They were computed by dividing the mass emission rate by the electrical power generated.

Sampling system QA/QC checks were conducted in accordance with test plan specifications to ensure the collection of adequate and accurate emissions data. These included analyzer linearity tests, sampling system bias and drift checks, and sampling train leak checks. Results of the QA/QC checks are discussed in Section 3. The results show that DQOs for all gas species met the reference method requirements. Table 2-7 summarizes the emission rates measured during each run and the overall average emissions for each set of tests.

In general, engine emissions were uncharacteristically high at all load points tested. This is most likely attributable to the fact that the engine operates well below design capacity due to the limitations in the biogas fuel delivery system. The engine received a complete overhaul in December 2003, but the excessively high levels of CO and CH_4 in the exhaust gases indicate that clearly the engine was not performing well at these loads. NO_X concentrations averaged 255 ppmvd at 15% O_2 at the 45 kW power command, and decreased to approximately 41 ppmvd at 15% O_2 at the lowest load tested. The overall average NO_X emission rate at 45 kW, normalized to power output, was 0.012 lb/kWh. Annual published data from Energy Information Administration (EIA) reveal that the measured CHP system emission rate is well above the average rate for coal and natural gas-fired power plants in the U.S. The rates are 0.0074 lb/kWh for coal-fired plants and 0.0025 lb/kWh for natural gas-fired plants. It is important to note however, that the ability of this system to recover and use engine exhaust heat offsets this increase in emissions somewhat.

Table 2-7. IC Engine CHP System Emissions During Controlled Test Periods

	Electrical Power Output (kW)	Exhaust O_2 (%)	NO_x Emissions			CO Emissions			CH_4 Emissions			CO_2 Emissions		
			(ppm at 15% O_2)	(lb/hr)	(lb/kWh)	(ppm at 15% O_2)	(lb/hr)	(lb/kWh)	(ppm at 15% O_2)	(lb/hr)	(lb/kWh)	(%)	(lb/hr)	(lb/kWh)
Run 1	44.6	4.3	279	0.556	1.25E-02	1081	1.31	0.029	5957	4.12	0.092	12.7	85.9	1.93
Run 2	44.7	4.2	244	0.529	1.18E-02	2100	2.77	0.062	7202	5.44	0.122	12.0	88.1	1.97
Run 3	44.7	4.2	242	0.539	1.21E-02	2716	3.69	0.082	7013	5.44	0.122	12.0	90.4	2.02
AVG	**44.7**	**4.2**	**255**	**0.541**	**1.21E-02**	**1966**	**2.59**	**0.058**	**6724**	**5.00**	**0.112**	**12.2**	**88.1**	**1.97**
Run 4	29.7	6.1	51	0.082	2.77E-03	ND	ND	ND	7078	3.97	0.134	8.20	50.4	1.70
Run 5	29.6	4.6	35	0.061	2.06E-03	ND	ND	ND	7502	4.50	0.152	12.2	72.9	2.46
Run 6	29.5	4.5	36	0.063	2.14E-03	ND	ND	ND	8011	4.88	0.165	12.1	73.0	2.47
AVG	**29.6**	**5.1**	**41**	**0.069**	**2.32E-03**	**NA**	**NA**	**NA**	**7530**	**4.45**	**0.150**	**10.8**	**65.4**	**2.21**
Run 7	37.5	4.7	80	0.140	3.73E-03	ND	ND	ND	7647	4.63	0.124	12.1	73.5	1.96
Run 8	37.6	5.6	150	0.260	6.93E-03	ND	ND	ND	7262	4.38	0.117	12.3	78.8	2.09
Run 9	37.6	5.6	162	0.280	7.44E-03	ND	ND	ND	6439	3.87	0.103	12.7	81.0	2.16
AVG	**37.6**	**5.3**	**131**	**0.227**	**6.03E-03**	**NA**	**NA**	**NA**	**7116**	**4.30**	**0.114**	**12.4**	**77.8**	**2.07**

ND = No data collected. Emissions exceeded analyzer range (10,000 ppm).
NA = Not applicable

(Continued)

Table 2-7. IC Engine CHP System Emissions During Controlled Test Periods (Continued)

	Electrical Power Output (kW)	Exhaust O_2 (%)	Particulate Emissions			NH_3 Emissions			SO_2 Emissions			TRS Emissions		
			(gr/dscf)	(lb/hr)	(lb/kWh)	(ppm at 15% O_2)	(lb/hr)	(lb/kWh)	(ppm at 15% O_2)	(lb/hr)	(lb/kWh)	(ppm at 15% O_2)	(lb/hr)	(lb/kWh)
Run 1	44.6	4.3	0.0024	0.0020	4.48E-05	0.29	2.10E-04	4.71E-06	364	1.01	0.023	56.3	0.16	0.004
Run 2	44.7	4.2	0.0027	0.0025	5.59E-05	0.17	1.40E-04	3.13E-06	338	1.02	0.023	64.8	0.20	0.004
Run 3	44.7	4.2	0.0083	0.0078	1.74E-04	0.22	1.80E-04	4.03E-06	355	1.10	0.025	113	0.35	0.008
AVG	**44.7**	**4.2**	**0.0045**	**0.0041**	**9.18E-05**	**0.23**	**1.77E-04**	**3.96E-06**	**352**	**1.04**	**0.023**	**78.0**	**0.24**	**0.005**
Run 4	29.7	6.1	ND	ND	ND	ND	ND	ND	374	0.84	0.028	79.0	0.18	0.006
Run 5	29.6	4.6	ND	ND	ND	ND	ND	ND	360	0.87	0.029	134	0.32	0.011
Run 6	29.5	4.5	ND	ND	ND	ND	ND	ND	376	0.92	0.031	125	0.30	0.010
AVG	**29.6**	**5.1**	**NA**	**NA**	**NA**	**NA**	**NA**	**NA**	**370**	**0.88**	**0.030**	**113**	**0.27**	**0.009**
Run 7	37.5	4.7	ND	ND	ND	ND	ND	ND	373	0.91	0.024	160	0.39	0.010
Run 8	37.6	5.6	ND	ND	ND	ND	ND	ND	374	0.90	0.024	20.4	0.05	0.001
Run 9	37.6	5.6	ND	ND	ND	ND	ND	ND	376	0.91	0.024	157	0.38	0.010
AVG	**37.6**	**5.3**	**NA**	**NA**	**NA**	**NA**	**NA**	**NA**	**374**	**0.91**	**0.024**	**112**	**0.27**	**0.007**

ND = No data collected. These pollutants not tested at reduced loads.
NA = Not applicable

Exhaust gas CO concentrations averaged 1,966 ppmvd at 15% O_2 at 45 kW and were beyond the range of the CO analyzer at reduced loads (greater than 10,000 ppmvd). Corresponding average CO emission rates at 45 kW were approximately 0.06 lb/kWh.

The center was unable to quantify THC concentrations at any power setting because they exceeded the 10,000 ppm range of the analyzer. However, the on-site GC/FID used for CH_4 determinations confirmed that there were no hydrocarbons other than CH_4 present in the exhaust gas in significant quantities. CH_4 concentrations were high over the entire range of operations tested, averaging over 6,700 ppmvd at 15% O_2 at 45 kW and over 7,500 ppmvd at 15% O_2 at the 30 kW power command. Corresponding CH_4 emission rates at these power commands were approximately 0.11 and 0.15 lb/kWh, respectively.

Concentrations of CO_2 in the CHP system exhaust gas averaged 12.2 percent at 45 kW and decreased as power output was reduced to a low of 10.8 percent. These concentrations correspond to average CO_2 emission rates of 1.97 lb/kWh and 2.21 lb/kWh, respectively. The CHP system CO_2 emission rate at full load is slightly lower than the weighted average emission factors for both the US and Colorado regional grids (2.02 and 2.13 lb/kWh, respectively).

Emissions of total particulate matter and NH_3 were extremely low during each of the three test replicates conducted at 45 kW. SO_2 emissions from the CHP were fairly consistent throughout the range of operation. SO_2 concentrations at 45 kW averaged 352 ppmvd at 15% O_2 and corresponding emission rates averaged 0.023 lb/kWh. Emissions of TRS, the sulfurous compounds in the fuel that were not oxidized during combustion, averaged approximately 78.0 ppmvd at 15% O_2 and 0.005 lb/kWh during the full load tests.

2.4.2. Estimation of Annual Emission Reductions

The average engine CHP emission rates for NO_X and CO_2 were 0.012 and 1.97 lb/kWh, respectively. The extended monitoring period is representative of normal site operations. During that 216-hour period, the engine ran at 45 kW on biogas for 75.3 hours (34.9 percent of the time) and produced 3,358 kWh electricity. Projecting that power production rate over the course of a year, the engine would produce approximately 136,000 kWh electricity using biogas fuel. Based on the measured emission rates and the estimated annual power production, approximate annual emissions from the engine CHP system would be around 0.82 and 134 tons per year NO_X and CO_2, respectively. Table 2-8 summarizes how those emission rates compare to the emissions associated with the U.S. and Colorado regional grid fossil fuel emission factors for an equivalent amount of power production.

Table 2-8. Comparison of IC Engine CHP Emissions to Regional Emissions for Equivalent Fossil Fuel Grid Power (to produce 136,000 kWh)

Pollutant	Estimated Annual CHP Emissions (tons)	U.S. Regional Annual Emissions (tons)[a]	Percent Reduction (Increase)	Colorado Regional Annual Emissions (tons)[b]	Percent Reduction (Increase)
NO_X	0.82	0.45	(82)	0.53	(55)
CO_2	134	137	2.2	145	7.6

[a] Based on average U.S. regional NO_X and CO_2 emission factors of 0.00655 and 2.022 lb/kWh, respectively [12].
[b] Based on average Colorado regional NO_X and CO_2 emission factors of 0.00773 and 2.129 lb/kWh, respectively [12].

It is estimated that power generation using the IC engine CHP at Colorado Pork increases annual NO_X emissions by approximately 0.37 tons using the U.S. regional scenario and 0.29 tons using the Colorado scenario. Estimated annual CHP CO_2 emissions are 3 and 11 tons lower than the regional average CO_2 emissions. As noted earlier, recovery and use of waste heat provides additional environmental benefits and emissions offsets that were not evaluated here. In addition, using biogas as fuel potentially decreases agricultural releases of methane to the atmosphere, another important environmental benefit of this system.

3.0 DATA QUALITY ASSESSMENT

3.1. DATA QUALITY OBJECTIVES

The GHG Center selects methodologies and instruments for all verifications to ensure a stated level of data quality in the final results. The GHG Center specifies data quality objectives (DQOs) for each verification parameter before testing commences. Each test measurement that contributes to the determination of a verification parameter has stated data quality indicators (DQIs) which, if met, ensure achievement of that verification parameter's DQO.

The establishment of DQOs begins with the determination of the desired level of confidence in the verification parameters. Table 3-1 summarizes the DQOs established in the test planning stage for each verification parameter. The actual data quality achieved during testing is also shown. The next step is to identify all measured values which affect the verification parameter and determine the levels of error which can be tolerated. These DQIs, most often stated in terms of measurement accuracy, precision, and completeness, are used to determine if the stated DQOs are satisfied. The DQIs for this verification - used to support the DQOs listed in Table 3-1 - are summarized in Table 3-2.

Table 3-1. Verification Parameter Data Quality Objectives

Verification Parameter	Original DQO Goal[a] Relative (%) /Absolute (units)	Achieved[b] Relative (%) /Absolute (units)
Power and Heat Production Performance		
Electrical power output (kW)	± 1.50% / 0.98 kW	± 1.0% / 0.45 kW
Electrical efficiency (%)	± 1.52% / 0.41%[c]	± 1.10% / 0.22%[c]
Heat recovery rate (10^3Btu/hr)	± 2.0% / 5.75 x 10^3Btu/hr[c]	± 2.0% / 5.5 x 10^3Btu/hr[c]
Thermal energy efficiency (%)	± 1.68% / 0.75%[c]	± 2.24 / 0.73%[c]
CHP production efficiency (%)	± 1.18% / 0.82%[c]	± 1.46% / 0.76%[c]
Power Quality Performance		
Electrical frequency (Hz)	± 0.01% / 0.006 Hz	± 0.01% / 0.006 Hz
Voltage	± 1.01 % / 1.21 V[c]	± 1.0 % / 2.09 V[c]
Power factor (%)	± 0.50% / TBD	± 0.50% / 0.40%
Voltage and current total harmonic distortion (THD) (%)	± 1.00% / TBD	± 1.0% / 0.05%
Emissions Performance		
NO_X, CO, CO_2, O_2, TRS, and SO_2 concentration accuracy	± 2.0% of span[d]	± 2.0% of span[d]
CH_4 concentration accuracy	± 5.0% of span[d]	± 5.0% of span[d]
TPM and NH_3 concentration accuracy	± 5.0%	± 10.0%

[a] Original DQO goals as stated in test plan. Absolute errors were provided in the test plan, where applicable, based on anticipated values.
[b] Overall measurement uncertainty achieved during verification. The absolute errors listed are based on these uncertainties, and the average values measured during the verification
[c] Calculated composite errors were derived using the procedures described in the corresponding subsections (Sections 3.2.2 through 3.2.5).
[d] Qualitative data quality indicators based on conformance to reference method requirements.

The DQIs specified in Table 3-2 contain accuracy, precision, and completeness levels that must be achieved to ensure that DQOs can be met. Reconciliation of DQIs is conducted by performing independent performance checks in the field with certified reference materials and by following approved

reference methods, factory calibrating the instruments prior to use, and conducting QA/QC procedures in the field to ensure that instrument installation and operation are verified. The following sections address reconciliation of each of the DQI goals.

This verification was supported by an Audit of Data Quality (ADQ) conducted by the GHG Center QA manager. During the ADQ, the QA manager randomly selected data supporting each of the primary verification parameters and followed the data through the analysis and data processing system. The ADQ confirmed that no systematic errors were introduced during data handling and processing. A performance evaluation audit (PEA) and a technical systems audit (TSA) were planned but not conducted. Similar PEAs were recently conducted on two recent CHP verifications [13, 14] and it was decided to not repeat the PEA a third time. Likewise, a full TSA was recently completed on a similar verification [13] where the same measurement systems were used, so this QA activity was not repeated here. Instead, the GHG Center QA manager conducted an abbreviated project review to ensure that the verification approach and analytical procedures specified in the TQAP were followed or, in cases where changes to the verification were necessary, these changes were justified and documented.

3.2. RECONCILIATION OF DQOs AND DQIs

Table 3-2 summarizes the range of measurements observed in the field and the completeness goals. Completeness is the number or percent of valid determinations actually made relative to the number or percent of determinations planned. The completeness goals for the controlled tests were to obtain electrical and thermal efficiency as well as emission rate data for three test runs conducted at each of four different load conditions. This completeness goal was partially achieved in that three valid runs were conducted at each load. However, only three different load conditions were tested due to the limited range of engine operations (limited to a range of about 30 to 45 kW).

Completeness goals for the extended tests were to obtain 90 percent of 7 days of power quality, power output, heat recovery rate, and ambient measurements. This goal was exceeded—9 complete days of valid data were collected. These data were useful in establishing trends in power and heat performance capability at varying ambient temperatures as discussed in Section 2.0.

Table 3-2 also includes accuracy goals for measurement instruments. Actual measurement accuracies achieved are also reported based on instrument calibrations conducted by manufacturers, field calibrations, reasonableness checks, or independent performance checks with a second instrument. Table 3-3 includes the QA/QC procedures that were conducted for key measurements in addition to the procedures used to establish DQIs. The accuracy results for each measurement and their effects on the DQOs are discussed below.

Table 3-2. Summary of Data Quality Indicator Goals and Results

Measurement Variable		Instrument Type and Manufacturer	Instrument Range	Range Observed in Field	Accuracy			Completeness	
					Goal	Actual	How Verified or Determined	Goal	Actual
CHP System Power Output and Quality	Power	Electric Meter/ Power Measurements 7500 ION	0 to 100 kW	29.2 to 46.3 kW	± 1.5% reading	± 1.0% reading	Instrument calibration from manufacturer prior to testing	Controlled tests: three valid runs per load meeting PTC 17 criteria. Extended test: 90% of one minute readings for 7 days.	Controlled tests: three valid runs per load meeting PTC 17 criteria. Extended test: 100% of one minute readings for 9 days.
	Voltage		0 to 600 V	204 to 210 V	± 1.0% reading	± 1.0% reading			
	Frequency		55 to 65 Hz	58.6 to 60.0 Hz	± 0.01% reading	± 0.01% reading			
	Current		0 to 200A	36 to 161 A	± 1.0% reading	± 1.0% reading			
	Voltage THD		0 to 100%	0.5 to 10.8%	± 1.0% full scale	± 1.0% full scale			
	Current THD		0 to 100%	1.4 to 10.7%	± 1.0% full scale	± 1.0% full scale			
	Power Factor		0 to 100%	69.3 to 83.6%	± 0.5% reading	± 0.5% reading			
CHP System Heat Recovery Rate	Inlet Temperature	Controlotron Model 1010EP	80 to 150 °F	92 to 103 °F	Temps must be ± 1.5 °F of ref. Thermocouples	± 0.7 °F for outlet, ± 0.8 °F for inlet	Independent check with calibrated thermocouple		
	Outlet Temperature		80 to 150 °F	92 to 108 °F					
	Water Flow		0 to 150 gpm	106 to 122 gpm	± 1.0% reading	± 0.1% reading	Instrument calibration from manufacturer prior to testing		
Ambient Conditions	Ambient Temperature	RTD / Vaisala Model HMD 60YO	-50 to 150 °F	12 to 59 ° F	± 0.2 °F	± 0.2 °F	Instrument calibration from manufacturer prior to testing		
	Ambient Pressure	Setra Model 280E	0 to 25 psia	12.53 to 12.84 psia	± 0.1% full scale	± 0.05% full scale			
	Relative Humidity	Vaisala Model HMD 60YO	0 to 100% RH	18 to 50% RH	± 2%	± 0.2%			

(continued)

3-3

Table 3-2. Summary of Data Quality Indicator Goals and Results (continued)

Measurement Variable		Instrument Type and Manufacturer	Instrument Range	Measurement Range Observed	Accuracy			Completeness	
					Goal	Actual	How Verified or Determined	Goal	Actual
Fuel Input	Gas Flow Rate	Dresser-Roots Model 2M175 SSM Series B3 rotary displacement	0 to 30 scfm	19 to 21 scfm	1.0% of reading	± 0.3% of reading	Factory calibration with volume prover	Controlled tests: three valid runs per load meeting PTC 17 criteria. Extended test: 90% of one minute readings for 7 days.	Controlled tests: three valid runs per load meeting PTC 17 criteria. Extended test: 100% of one minute readings for 9 days.
	Gas Pressure	Omega Model PX205-030AI transducer	0 to 30 psia	12 to 14 psia	± 0.75% full scale	± 0.25% full scale	Instrument calibration to NIST traceable standards		
	Gas Temperature	Omega TX-93 Type K thermocouple	0 to 200 °F	54 to 97 °F	± 0.10% reading	± 0.10% reading			
	LHV	Gas Chromatograph / HP 589011	0 to 100% CH_4	67 to 69% CH_4	± 3.0% accuracy, ± 0.2% repeatability	± 0.5% accuracy, ± 0.05% repeatability	analysis of NIST-traceable CH_4 standard, and duplicate analysis on 3 samples	Controlled tests: two valid samples per load	Controlled tests: two valid samples per load
				616 to 633 Btu/ft^3	0.1% repeatability	± 0.06% repeatability	Conducted duplicate analyses on 3 samples		
Exhaust Stack Emissions	NO_X Levels	Chemiluminescent/ CAI 400-CLD	0 to 1,000 ppmvd	95 to 800 ppmvd	± 2% full scale	≤ 2% full scale	Calculated following EPA Reference Method calibrations (Before and after each test run)	Controlled tests: three valid runs per load.	Controlled tests: three valid runs per load.
	CO Levels	NDIR / TEI Model 48	0 to 10,000 ppmvd	3,000 to 8,000 ppmvd [a]	± 2% full scale	≤ 2% full scale			
	CH_4 Levels	HP 5890	0 to 25,000 ppmv	16,000 to 23,000 ppmv	± 5% full scale	≤ 5% reading			
	SO_2 Levels	Bovar 721-AT	0 to 1,000 ppmvd	900 to 1,000 ppmvd	± 2% full scale	≤ 2% full scale			
	O_2 / CO_2 Levels	CAI 200	0 to 25%	4 to 6% O_2 8 to 13% CO_2	± 2% full scale	≤ 2% full scale			
	TRS Levels	Ametek 921	0 to 1,000 ppmvd	50 to 440 ppmvd	± 2% full scale	≤ 2% full scale			
	NH_3 Levels	Ion specific electrode	0 to 5 ug/ml	0 to 4.2 ug/ml	± 5% full scale	≤ 5% full scale			
	TPM concentrations	gravimetric	Not specified	0.01 to 0.04 g	± 1 mg	± .05 mg			
	Stack gas velocity	Pitot and thermocouple	Not specified	3552 to 3753 fpm	± 5% reading	≤ 5% reading			

[a] The range of CO concentrations is for runs 1 through 3 only. All others exceeded the 10,000 ppm analyzer span.

3-4

3.2.1. Power Output

Instrumentation used to measure power was introduced in Section 1.0 and included a Power Measurements Model 7500 ION. The data quality objective for power output was ± 1.5 percent of reading, which includes compounded error of the instrument, the CTs, and the PT. The test plan specified factory calibration of the ION meter with a NIST-traceable standard to determine if the power output DQO was met. The test plan also required the GHG Center to perform several reasonableness checks in the field to ensure that the meter was installed and operating properly. The following summarizes the results.

The meter was factory calibrated by Power Measurements in April 2003. Calibrations were conducted in accordance with Power Measurements' standard operating procedures (in compliance with ISO 9002:1994) and are traceable to NIST standards. The meters were certified by Power Measurements to meet or exceed the accuracy values summarized in Table 3-2 for power output, voltage, current, and frequency. NIST-traceable calibration records are archived by the GHG Center. Pretest factory calibrations on the meters indicated that accuracy was within ± 0.05 percent of reading and this value, combined with the 1.0-percent error inherent to the current transformers resulted in an overall error of ± 1.01-percent. The potential transformer was not needed, eliminating that error. Using the manufacturer-certified calibration results and the average power output measured during the full-load testing, the error during all testing is determined to be ± 0.45 kW.

Additional QC checks were performed on the 7500 ION to verify the operation after installation of the meters at the site and prior to the start of the verification test. The results of these QC checks (summarized in Table 3-3) are not used to reconcile the DQI goals, but to document proper operation in the field. Current and voltage readings were checked for reasonableness using a hand-held Fluke multimeter. These checks confirmed that the voltage and current readings between the 7500 ION and the Fluke were within the range specified in the test plan as shown in Table 3-3.

These results led to the conclusion that the 7500 ION was installed and operating properly during the verification test. The ± 1.0-percent error in power measurements, as certified by the manufacturer, was used to reconcile the power output DQO (discussed above) and the electrical efficiency DQO (discussed in Section 3.2.2).

Table 3-3. Results of Additional QA/QC Checks				
Measurement Variable	**QA/QC Check**	**When Performed/Frequency**	**Expected or Allowable Result**	**Results Achieved**
Power Output	Sensor diagnostics in field	Beginning and end of test	Voltage and current checks within ± 1% reading	± 0.1% voltage ± 0.9% current
	Reasonableness checks	Throughout test	Readings should be around 45 kW net power output at full load	Readings were 44 to 46 kW
Fuel Flow Rate	Reasonableness checks	Throughout test	Readings expected to be around 18 scfm at 45 kW power output	Readings were 19 to 21 scfm
Fuel Heating Value	Calibration with gas standards by laboratory	Prior to analysis of each lot of samples submitted	± 1.0% for each gas constituent	Results satisfactory, see Section 3.2.2.4
	Independent performance checks with blind audit sample	Twice during previous year	± 3.0% for each major gas constituent (methane, CO_2)	
Heat Recovery Rate	Meter zero check	Prior to testing	Reported flow rate < 0.1 gpm	–0.06 gpm recorded
	Independent performance check of temperature readings	Beginning of test period	Difference in temperature readings should be < 1.5 °F	Temperature readings within 0.8 °F of reference.

3.2.2. Electrical Efficiency

The DQO for electrical efficiency was to achieve an uncertainty of ± 1.52 percent at full electrical load or less. Recall from Equation 1 (Section 1.4.1) that the electrical efficiency determination consists of three direct measurements: power output, fuel flow rate, and fuel LHV. The accuracy goals specified to meet the electrical efficiency DQO consisted of ± 1.5 percent for power output, ± 1.0 percent for fuel flow rate, and ± 0.2 percent for LHV. The accuracy goals for each measurement were met. The following summarizes actual errors achieved and the methods used to compute them.

Power Output: As discussed in Section 3.2.1, factory calibrations of the 7500 ION with a NIST-traceable standard and the inherent error in the current and potential transformers resulted in ± 1.0-percent error in power measurements. Reasonableness checks in the field verified that the meter was functioning properly. The average power output at full load was measured to be 45 kW and the measurement error is determined to be ± 0.45 kW.

Heat Input: Heat input is the product of measured fuel flow rate and LHV. The DQI goal for fuel flow rate was reconciled through calibration of the gas meter and the gas temperature and pressure sensors used to correct measured gas volumes to standard conditions. All three components were calibrated with NIST-traceable standards. As shown in Table 3-2, the individual instruments errors were 0.3, 0.25, and 0.1 percent for flow, pressure, and temperature respectively. The overall error in biogas flow rate then is 0.40 percent of reading. Therefore, the average flow rate at full load was 20.8 scfm with a measurement error of ± 0.08 scfm. Complete documentation of data quality results for fuel flow rate is provided in Section 3.2.2.3.

Uncertainty in the biogas LHV results was within the 0.2 percent DQI goal (Section 3.2.2.4). The average LHV during testing was 622 Btu/ft^3 and the measurement error corresponding to this heating value is ± 1.2 Btu/ft^3. The heat input compounded error then is:

$$Error\ in\ Heat\ Input = \sqrt{(flowmetererror)^2 + (LHVerror)^2} \qquad \text{(Equation. 7)}$$

$$= \sqrt{(0.004)^2 + (0.002)^2} = 0.0045$$

The measurement error amounts to approximately ± 3.48 x 10^{3}Btu/hr, or 0.45 percent relative error at the average measured heat input of 774.1 x 10^{3}Btu/hr.

The errors in the divided values compound similarly for the electrical efficiency determination. The electrical power measurement error is ± 1.0 percent relative (Table 3-2) and the heat input error is ± 0.45 percent relative. Therefore, compounded relative error for the electrical efficiency determination is:

$$Error\ in\ Elec.\ Power\ Efficiency = \sqrt{(powermetererror)^2 + (heatinputerror)^2} \qquad \text{(Equation. 8)}$$

$$= \sqrt{(0.010)^2 + (0.0045)^2} = 0.0110$$

Electrical efficiency for the controlled test periods at 45 kW was 19.7 ± 0.22 percent, or a relative compounded error of 1.10 percent.

3.2.2.1. PTC-17 Requirements for Electrical Efficiency Determination

PTC-17 guidelines state that efficiency determinations were to be performed within 60 minute test periods in which maximum variability in key operational parameters did not exceed specified levels. Table 3-4 summarizes the maximum permissible variations observed in power output, ambient temperature, ambient pressure, biogas pressure at the meter, and biogas temperature at the meter for each test run. The table shows that the PTC-17 requirements for all parameters were met for all test runs.

Table 3-4. Variability Observed in Operating Conditions

	Maximum Observed Variation[a] in Measured Parameters				
	Power Output (%)	**Ambient Temp. (°F)**	**Ambient Pressure (%)**	**Biogas Pressure (%)**	**Biogas Temperature (°F)**
Maximum Allowable Variation	**± 3**	**± 5**	**± 1**	**± 2**	**± 4**
Run 1	1.1	2.3	0.04	0.07	1.5
Run 2	0.4	0.5	0.08	0.04	0.4
Run 3	1.2	0.7	0.03	0.13	0.4
Run 4	0.8	0.9	0.06	0.11	0.4
Run 5	0.8	0.6	0.05	0.05	0.6
Run 6	0.8	0.4	0.04	0.07	0.6
Run 7	0.8	1.7	0.03	0.05	1.7
Run 8	0.5	3.1	0.04	0.08	2.2
Run 9	0.6	1.7	0.06	0.07	1.6

[a] Maximum (Average of Test Run – Observed Value) / Average of Test Run · 100

3.2.2.2. Ambient Measurements

Ambient temperature, relative humidity, and barometric pressure at the site were monitored throughout the extended verification period and the controlled tests. The instrumentation used is identified in Table 3-2 along with instrument ranges, data quality goals, and data quality achieved. All three sensors were factory-calibrated using reference materials traceable to NIST standards. The pressure sensor was calibrated prior to the verification testing, confirming the ± 0.1 percent accuracy. The temperature and relative humidity sensors were also calibrated within a year prior to testing which verified that the ± 0.2 °F accuracy goal for temperature and ± 2 percent accuracy goal for relative humidity were met.

3.2.2.3. Fuel Flow Rate

The Dresser-Roots Model 2M175 rotary displacement gas meter was factory-calibrated prior to installation in 1999. Calibration records were obtained and reviewed to ensure that the ± 1.0-percent instrument accuracy goal was satisfied. Roots meter calibrations are permanent, indicating that this meter's accuracy is ± 0.32 percent.

3.2.2.4. Fuel Lower Heating Value

Full documentation of biogas sample collection date, time, run number, and canister ID were logged along with laboratory chain of custody forms and were shipped along with the samples. Copies of the chain of custody forms and results of the analyses are stored in the GHG Center project files. Collected samples were shipped to Empact Analytical Laboratories of Brighton, CO, for compositional analysis and determination of LHV per ASTM test Methods D1945 [5] and D3588 [6], respectively. The DQI goals were to measure methane concentrations within ± 3.0 percent of a NIST-traceable blind audit sample and to achieve less than ± 0.2 percent difference in LHV duplicate analyses results. Blind audits were submitted to Empact on two similar verifications within the past year to evaluate analytical accuracy on the methane analyses [13, 14]. Both audits indicated analytical accuracy within 0.5 percent, and repeatability of within ± 0.2 percent. Since the same sampling and analytical procedures were used here by the same analyst, the audit was not repeated a third time.

In addition to the blind audit samples, duplicate analyses were conducted on three of the samples collected during the controlled test periods. Duplicate analysis is defined as the analysis performed by the same operating procedure and using the same instrument for a given sample volume. Results of the duplicate analyses showed an average analytical repeatability of 0.06 percent for methane and 0.06 percent for LHV. The results demonstrate that the ± 0.2 percent LHV accuracy goal was achieved. As such, both DQIs were met with the methane accuracy at ± 0.5 percent and the LHV repeatability at ± 0.06 percent.

3.2.3. Heat Recovery Rate and Efficiency

Several measurements were conducted to determine CHP system heat-recovery rate and thermal efficiency. These measurements include water flow rate, water supply and return temperatures, and CHP system heat input. The individual errors in each of the measurements is then propagated to determine the overall error in heat-recovery rate and efficiency. The Controlotron ultrasonic heat meter was used to continuously monitor water flow rate. This meter has a NIST-traceable factory-calibrated accuracy of ± 1.0 percent of reading (this flow through calibration was conducted on October 9, 2002). This certification serves as the primary DQI. A zero check was also performed on the flow meter. The meter reading was -0.06 gpm with the CHP system shut down and the circulation pump off.

Table 3-2 showed that the DQI for supply and return temperatures (delta T) was achieved. Each temperature sensor was calibrated against a reference thermocouple with NIST-traceable accuracy. The error in the two temperature sensors resulted in an overall delta T uncertainty of 0.8 ^{o}C. This absolute error equates to a relative error of 2.0 percent at the average fluid temperatures measured during the full-load testing (about 39.4 ^{o}C). The overall error in heat recovery rate is then the combined error in flow rate and temperature differential. This error compounds multiplicatively as follows:

$$= \sqrt{(0.010)^2 + (0.020)^2} = 0.022 \qquad \text{(Equation. 9)}$$

The heat recovery rate determination, therefore, has a relative compounded error of ± 2.2 percent. The absolute error in the average heat recovery rate at 45 kW power setting (250 x 10^3 Btu/hr) then is ± 5.50 x 10^3Btu/hr.

This error in heat-recovery rate and the heat input error (0.45 percent) compound similarly to determine the overall uncertainty in the thermal efficiency determination as follows:

$$\text{Error in Heat Recovery Efficiency} = \sqrt{(0.022)^2 + (0.0045)^2} = 0.0224 \qquad \text{(Equation. 10)}$$

Average heat recovery rate (thermal) efficiency at full load then is 32.4 ± 0.73 percent, or a relative compounded error of 2.24 percent. This compounded slightly exceeds the data quality objective for this verification parameter (the absolute error meets the DQO however).

3.2.4. Total Efficiency

Total efficiency is the sum of the electrical power and heat-recovery efficiencies. For this test, total efficiency is calculated as 19.7 ± 0.22 percent (± 1.10-percent relative error) plus 32.4 ± 0.73 percent (± 2.24-percent relative error). This is based on the determined errors in electrical and thermal efficiency at the 45 kW power setting. The absolute errors compound as follows:

$$err_{c,abs} = \sqrt{err_1^{\,2} + err_2^{\,2}} \qquad \text{(Equation. 11)}$$

$$= \sqrt{0.22^2 + 0.73^2} = 0.76$$

Relative error, is:

$$err_{c,rel} = \frac{err_{c,abs}}{Value_1 + Value_2} \qquad \text{(Equation. 12)}$$

$$= \frac{0.76}{19.7 + 32.4} = 0.0146$$

where:

$err_{c,abs}$	=	compounded error, absolute
err_1	=	error in first added value, absolute value
err_2	=	error in second added value, absolute value
$err_{c,rel}$	=	compounded error, relative
$value_1$	=	first added value
$value_2$	=	second added value

The total CHP efficiency at full load is 52.1 ± 0.76 percent, or 1.46 percent relative error. This compounded slightly exceeds the data quality objective for this verification parameter (the absolute error meets the DQO however).

3.2.5. Exhaust Stack Emission Measurements

EPA reference method requirements form the basis for the qualitative DQIs specified in the test plan and listed in Tables 3-1 and 3-2. Each method specifies sampling and calibration procedures and data quality checks. These specifications, when properly implemented, ensure the collection of high quality and representative emissions data. The specific sampling and calibration procedures vary by method and class of pollutants, and are summarized in Table 3-5. The table lists the method quality requirements, the acceptable criteria, and the results for the test conducted here. It is generally accepted that conformance to the reference method quality requirements demonstrates that the qualitative DQIs have been met.

All of the emissions testing and reference method quality control procedures were conducted by Cubix Corporation either in the field during testing or in their calibration and analytical laboratories in Austin, Texas. All of the field sampling procedures and calibrations were closely monitored by GHG Center personnel. In addition, documentation of all sampling and analytical procedures, data collection, and calibrations have been procured, reviewed, and filed by the GHG Center. Table 3-5 is followed by a brief explanation of the QA/QC procedures implemented for each class of pollutant quantified during this verification.

3.2.5.1. NO_X, CO, CO_2, SO_2, TRS, and O_2 Concentrations

Test personnel performed sampling system calibration error tests prior to each test run. All calibrations employed a suite of three EPA Protocol No. 1 calibration gases (four for CO) that spanned the instrument ranges. Appropriate calibration ranges were selected for each pollutant based on exhaust gas screening (ranges are summarized in Table 3-2). The daily analyzer calibration error goal for each instrument was ± 2.0 percent of span. It was met for each analyzer during each day of testing.

Sampling system bias was evaluated for each parameter at the beginning of each test run using the zero and mid-level calibration gases. System response to the zero and mid-level calibration gases also provided a measure of drift and bias at the end of each test run. The maximum allowable sampling system bias and drift values were ± 5 and ± 3 percent of span, respectively. These specifications were met for each parameter and for each test run. Testers also performed a NO_X converter efficiency test as described in Section 3.5 of the test plan. The converter efficiency was 99.98 percent, which meets the 98-percent goal specified in the method.

It should be noted that the CO analyzer was specified to be on a range of 0 to 1,000 ppm. The 4-point instrument calibration was conducted at that range. However, due to the extremely high CO levels in the exhaust gas, the range had to be increased to 0 to 10,000 ppm. A single calibration gas standard of 8,603 ppm was obtained to demonstrate instrument linearity at the higher range.

Table 3-5. Summary of Emissions Testing Calibrations and QC Checks				
Measurement Variable	**Calibration or QC Check**	**When Performed and Frequency**	**Expected or Allowable Result**	**Result of Calibration(s) or Check(s)**
NO_X, CO, CO_2, SO_2, TRS, and O_2 concentrations	Analyzer calibration error test	Daily before testing	± 2% of analyzer span	All within allowable level for each day
	System bias checks	Before each test run	± 5% of analyzer span	All within allowable level for each test run
	Calibration drift test	After each test run	± 3% of analyzer span	
CH_4 concentrations	Triplicate injections	Each test run	± 5% difference	All within allowable level for each test run
	Calibration of GC with gas standards by certified laboratory	Immediately prior to sample analyses and/or at least once per day	± 5% for each compound	All within allowable level for each day
TPM emissions	Pre and post test sampling system leak checks	Before and after each test run	Sampling system leak rate < 0.02 cfm	All checks < 0.02 cfm
	Minimum sample volume	After each test run	Corrected Vol. ≥ 60.0 dscf	Volumes ranged from 69.4 to 79.6 dscf
	Percent isokinetic sampling rate (I)	After each test run	90 % ≤ I ≤ 110 %	91 % ≤ I ≤ 102%
	Analytical balance calibration	Once before analysis	± 0.0001 g	Within allowable level
	Filter and reagent blanks	Once during testing after first test run	< 10% of particulate catch for first test run	Blank weights < 10% of each sample catch
	Dry gas meter calibration	Once before and once after testing	± 5%	Pre and post test calibrations within 1%
	Thermocouple calibration	Once after testing	± 1.5% of average stack temperature	Within 0.3% of reference TC
NH_3 concentrations	Calibration of instrument with NH_3 standards	Immediately prior to sample analyses and/or at least once/day	± 5%	Pre test calibrations within 1% of working standards
	Dry gas meter calibration	Once before and once after testing	± 5 %	Pre and post test calibrations within 1%
Exhaust gas volumetric flow rate	Pitot tube dimensional calibration / inspection	Once before and once after testing	See 40CFR60 Method 2, Section 10.0	Calibration criteria met
	Thermocouple calibration	Once after testing	± 1.5 % of average stack temperature	Within 0.3% of reference TC

3.2.5.2. CH_4 Concentrations

The test plan specified EPA Method 18 for determining stack gas methane concentrations. This testing was conducted on-site eliminating the need to collect bag samples for transport to a laboratory. Test operators injected calibration gas standards into the gas chromatograph (GC) to establish a concentration standard curve prior to sample analysis. The operator repeated the injections until the average of all desired compounds from three separate injections agreed to within 5.0 percent of the certified value. The acceptance criterion was met for all runs.

The analysts injected the mid-range standard to quantify instrument drift at the completion of each test. The analyst would repeat the calibration process used for the average of the two calibration curves to determine concentrations if he observed a variance larger than 5.0 percent.

3.2.5.3. Total Particulate Matter and Exhaust Gas Volumetric Flow Rate

Reference Methods 1 through 5, used for determination of exhaust gas volumetric flow rate and total particulate emissions, include numerous quality control and quality assurance procedures that are required to ensure collection of representative data. The most important of these procedures are listed in Table 3-5 along with the results for these tests. These methods do not specify overall uncertainties, but it is generally accepted that conformance to the control and quality assurance procedures will result in an overall method uncertainty ranging from around 5 to 30 percent, depending on the mass of the particulate catch, the quality of the sampling system, and the length of the sampling probe [15]. For these tests, TPM catches were in the range of 10 to 20 mg, the sampling system surfaces contacting the exhaust gases were constructed entirely of glass or Teflon, and the probe was less than 3-feet in length. In addition, testers documented that all of the key method criteria were met. It is therefore expected that the overall error for tests conducted here is ± 10 percent of reading. This exceeds the original goal of ± 5 percent, but this deviation from the plan is not believed to impact results significantly because TPM emissions were very low.

3.2.5.4. NH_3 Concentrations

Ammonia samples were collected in the back-half of the total particulate sampling train and therefore all of the sampling system criteria are the same as above. In the laboratory, analytical instrumentation was calibrated using nine working standards. A calibration curve for the instrument was developed using this nine-point calibration. The R^2 for the calibration curve was 0.9997, indicating excellent analytical linearity. Based on this, the same uncertainty used for the TPM determination (±10 percent) is assigned. Again, this level of uncertainty exceeds the original goal of ± 5 percent, but as with the TPM emissions, this deviation from the plan is not believed to impact results significantly because NH_3 emissions were also very low.

.

4.0 REFERENCES

[1] Southern Research Institute, *Environmental Technology Verification Report: Swine Waste Electric and Heat Production – Capstone 30 kW Microturbine System,* SRI/USEPA-GHG-QAP-27, www.sri-rtp.com, Greenhouse Gas Technology Center, Southern Research Institute, Research Triangle Park, NC. September 2004.

[2] Southern Research Institute, *Test and Quality Assurance Plan - Swine Waste Electric Power and Heat Production Systems: Capstone MicroTurbine and Martin Machinery Internal Combustion Engine,* SRI/USEPA-GHG-QAP-22, www.sri-rtp.com, Greenhouse Gas Technology Center, Southern Research Institute, Research Triangle Park, NC. November 2002.

[3] American Society of Mechanical Engineers, *Performance Test Code for Reciprocating Internal Combustion Engines, ASTM PTC-17*, New York, NY. 1997.

[4] American National Standards Institute / American Society of Heating, Refrigeration, and Air-conditioning Engineers, *Method of Testing Thermal Energy Meters for Liquid Streams in HVAC Systems,* ANSI/ASHRAE 125-1992, Atlanta, GA. 1995.

[5] American Society for Testing and Materials, *Standard Test Method for Analysis of Natural Gas by Gas Chromatography*, ASTM D1945-98, West Conshohocken, PA. 2001.

[6] American Society for Testing and Materials, *Standard Practice for Calculating Heat Value, Compressibility factor, and Relative Density of Gaseous Fuels*, ASTM D3588-98. West Conshohocken. PA. 2001.

[7]. American Society for Testing and Materials, *Standard Practice for Determination of Sulfur Compounds in Natural Gas by Gas Chromatography and Chemiluminescense*, ASTM D5504-01. West Conshohocken. PA, 2001.

[8] American National Standards Institute, ANSI / Institute of Electrical and Electronics Engineers, *IEEE, Master Test Guide for Electrical Measurements in Power Circuits*, ANSI/IEEE Std. 120-1989, New York, NY. October. 1989.

[9] American National Standards Institute, ANSI / Institute of Electrical and Electronics Engineers, *IEEE, Recommended Practices and Requirements for Harmonic Control in Electrical Power Systems*, IEEE Std. 519-1992, New York, NY. April. 1993.

[10] American National Standards Institute, ANSI / Institute of Electrical and Electronics Engineers, *National Standards for Electric Power Systems and Equipment - Voltage Ratings (Hertz),* ANSI C84.1-1995. American National Standards Institute, National Electrical Manufacturers Association, Rosslyn, VA. 1996.

[11] U.S. Environmental Protection Agency, Code of Federal Regulations, Title 40, Part 60, *New Source Performance Standards, Appendix A*, U.S. EPA, Washington, DC, 1999.

[12] U.S. Department of Energy, Energy Information Administration, *Annual Electric Utility Data, EIA-861, Data File,* http://www.eia.doe.gov/cneaf/electricity/page/eia861.html, Washington DC, 2000.

[13] Southern Research Institute, *Environmental Technology Verification Report: Combined Heat and Power at a Commercial Supermarket – Capstone 60 kW Microturbine CHP System,* SRI/USEPA-GHG-QAP-27, www.sri-rtp.com, Greenhouse Gas Technology Center, Southern Research Institute, Research Triangle Park, NC. September 2003.

[14] Southern Research Institute, *Environmental Technology Verification Report: Residential Electric Power Generation Using the Plug Power SU1 Fuel Cell System,* SRI/USEPA-GHG-QAP-25, www.sri-rtp.com, Greenhouse Gas Technology Center, Southern Research Institute, Research Triangle Park, NC. September 2003.

[15] Shigehara, R.T., *Measurement Uncertainty of Selected EPA Test Methods*, Emission Monitoring, Inc., Presented at Stationary Source Sampling and Analysis for Air Pollutants XXV Conference, March 2001.