VERIFICATION TEST PLAN FOR THE ONDEO DEGREMONT INC. UV AQUARAY HO DISINFECTION SYSTEM FOR REUSE APPLICATIONS VERSION 3.2

December 2002

Prepared for
NSF International
Ann Arbor, MI

and

US Environmental Protection Agency
Edison, NJ

by:

O. Karl Scheible
Egon T. Weber II

HydroQual, INC.
Mahwah, NJ

CONTENTS

Section Page

1 INTRODUCTION 1-1
1.1 ETV OBJECTIVES 1-1

2 ROLES AND RESPONSIBILITIES OF PARTICIPANTS IN THE VERIFICATION TESTING 2-1
2.1 NSF INTERNATIONAL (NSF) 2-1
2.2 U.S. ENVIRONMENTAL PROTECTION AGENCY (USEPA) 2-1
2.3 FIELD TESTING ORGANIZATION (FTO), HYDROQUAL, INC. 2-2
2.4 ETV HOST SITE PARSIPPANY TROY-HILLS WASTEWATER TREATMENT PLANT 2-3
2.5 UV TECHNOLOGY VENDOR ONDEO DEGREMONT INC. (ODI) 2-3
2.6 SUPPORT ORGANIZATIONS 2-8
2.7 TECHNOLOGY PANEL ON HIGH-RATE DISINFECTION 2-8

3 TECHNOLOGY DESCRIPTION 3-1
3.1 ONDEO DEGREMONT INC. UV DISINFECTION SYSTEM 3-1
3.1.1 Lamps and Sleeves 3-1
3.1.2 Lamp Aging 3-1
3.1.3 Lamp Intensity vs. Temperature 3-2
3.1.4 Lamp Modules 3-3
3.1.5 Sleeve Cleaning System 3-3
3.1.6 Electrical Controls 3-4
3.1.7 UV Detectors 3-4
3.1.8 Design Operational Envelope 3-4
3.2 UV PILOT TEST UNIT SPECIFICATIONS 3-5
3.2.1 Test Channel 3-5
3.2.2 Scaling Considerations 3-5
3.3 VERIFICATION TEST CLAIMS 3-6

4 DOSE DELIVERY VERIFICATION TEST PLAN 4-1
4.1 GENERAL TECHNICAL APPROACH 4-1
4.2 TEST FACILITY DESCRIPTION 4-2
4.2.1 Site Preparation Requirements 4-2
4.2.2 Facilities 4-5
4.2.3 Equipment and Supplies 4-5
4.3 OPERATING PLAN 4-5
4.3.1 Field and Laboratory Setup 4-6
4.3.2 Field Sampling Locations 4-6
4.3.3 System Startup and Shakedown 4-8
4.3.3.1 Flow Meter Calibration 4-8
4.3.3.2 Lamp “Burn-In” 4-8

4.3.3.3 Headloss Measurements 4-8
4.3.3.4 Measurement of Power Consumption and Stability 4-9
4.3.3.5 Shakedown Flows 4-9
4.3.4 Hydraulic Testing 4-9
4.3.5 Dose–Response Calibration 4-9
4.3.5.1 Selection, Culturing and Harvesting of Test Organism 4-9
4.3.5.2 Collimated Beam Apparatus 4-10
4.3.5.3 Intensity Calibration for the Collimated Beam and Sensor 4-12
4.3.5.4 Collimator Verification 4-12
4.3.5.5 Dose-Response Test Procedure 4-12
4.3.6 Field Dose-Flow Assay 4-13
4.3.6.1 Test Batch Preparation 4-13
4.3.6.2 Test Conditions 4-14
4.3.6.2.1 Quartz Surface Condition 4-14
4.3.6.2.2 UV Transmittance of the Test Water 4-14
4.3.6.2.3 MS2 Phage Densities 4-17
4.3.6.2.4 Lamp Output 4-17
4.3.6.2.5 Temperature 4-17
4.3.6.2.6 Hydraulic Loading Rates 4-18
4.3.6.3 Test Procedures, Sampling, System Monitoring 4-18
4.3.6.3.1 Test Procedure: Standard Bioassay 4-18
4.3.6.3.2 Test Procedure: Lamp Module 3 Evaluation 4-19
4.3.6.3.3 Field and Analytical Schedule 4-19
4.3.6.3.4 System Monitoring 4-19
4.3.7 Data Compilation and Analysis 4-39
4.3.7.1 Dose-Response Data Analysis 4-39
4.3.7.2 Hydraulic Characterization 4-41
4.3.7.3 Dose-Flow Relationships 4-41

5 QUALITY ASSURANCE PROJECT PLAN 5-1
5.1 PROJECT DESCRIPTION, and OBJECTIVES 5-1
5.1.1 Purpose of Study 5-1
5.1.2 ONDEO DEGREMONT Inc. Technology 5-1
5.1.3 Facility and Pilot-Plant Description 5-2
5.1.4 Project Objectives 5-2
5.2 ROLES AND RESPONSIBILITIES OF PARTICIPANTS IN THE VERIFICATION TESTING 5-3
5.2.1 NSF International (NSF) 5-3
5.2.2 U.S. Environmental Protection Agency (USEPA) 5-3
5.2.3 Field Testing Organization (FTO), HydroQual, Inc. 5-4
5.2.4 ETV Host Site Parsippany Troy-Hills (PTRH) Wastewater Treatment Plant 5-5
5.2.5 UV Technology Vendor ONDEO DEGREMONT Inc. (ODI) 5-5
5.2.6 Support Organizations 5-6
5.2.7 Technology Panel on High Rate Disinfection 5-6
5.3 GENERAL TECHNICAL APPROACH 5-8
5.3.1 Dose Delivery Verification 5-8

5.4 ANALYTICAL MEASUREMENTS FOR THIS ETV 5-8
5.4.1 Sampling and Monitoring Points 5-9
5.4.2 Frequency of Sampling/Monitoring 5-11
5.4.3 Planned Approach for Evaluating Objectives (i.e. Data Analysis) 5-11
5.4.4 QA/QC Sampling 5-11
5.5 SAMPLING PROCEDURES 5-11
5.5.1 Method Used to Establish Steady-state Conditions 5-11
5.5.2 Sampling/Monitoring Procedure 5-12
5.5.3 Sample Container/Identification Labeling 5-12
5.5.4 Suitability of Sampling Procedure With Respect to Matrix 5-12
5.5.5 Sampling/Monitoring Equipment Calibration for Those Associated with Critical Parameters 5-12
5.5.6 How Cross-Contamination Between Samples Will be Avoided. 5-13
5.5.7 Assure that Representative Samples are Collected 5-13
5.5.8 List of Sample Quantities to be Collected, Container Type, Sample Preservation, Holding Times 5-13
5.6 TESTING AND MEASUREMENT PROTOCOLS 5-13
5.6.1 Standard Methods/Non-standard Methods 5-13
5.7 QA/QC CHECKS 5-15
5.7.1 Quantitative QC Objectives 5-15
5.7.1.1 Precision 5-15
5.7.1.2 Accuracy 5-15
5.7.1.3 Completeness 5-15
5.7.1.4 QC Objectives for Water Analyses 5-16
5.7.1.5 QC Objectives for Coliphage Enumeration Procedures 5-16
5.7.1.6 QC Objectives for Dose Response Results 5-16
5.7.2 Qualitative QC Objectives 5-17
5.7.2.1 Comparability 5-17
5.7.2.2 Representativeness 5-17
5.7.3 Consequences of Not Meeting QC Objectives 5-17
5.8 DATA REPORTING, DATA REDUCTION AND DATA VALIDATION 5-17
5.8.1 Reporting Requirements 5-17
5.8.2 Documentation 5-18
5.8.3 Document Handling 5-20
5.8.4 Data Reduction/Validation and Reporting 5-20
5.8.4.1 Data Reduction 5-20
5.8.4.2 Data Validation 5-20
5.8.4.3 Data Reporting 5-21
5.9 ASSESSMENTS 5-21

6 GLOSSARY 6-1

7 REFERENCES 7-1

APPENDIX A PROJECT SUPPORT EQUIPMENT TECHNICAL SPECIFICATIONS
APPENDIX B LABORATORY METHOD MANUAL AND QA/QC MANUAL
APPENDIX C FIELD PROTOCOLS
APPENDIX D SPECIAL LABORATORY PROTOCOLS
APPENDIX E PROJECT HEALTH AND SAFETY PLAN
APPENDIX F SPILL PREVENTION

FIGURES

Figure Page

Figure 2-1. Project Area for ETV Testing at the Parsippany-Troy Hills WWTP.....2-5
Figure 2-2. General Site Plan of the ETV Test Facility at the Parsippany-Troy Hills WWTP...2-6
Figure 2-3. General Site Plan of the ETV Test Facility at the Parsippany-Troy Hills WWTP...2-7
Figure 3-1. Lamp Intensity as a Function of Age. 3-2
Figure 3-2. Relative Lamp Intensity as a Function of Water Temperature. 3-3
Figure 3-3. Lamp Module and Sleeve Assembly Detail.....3-8
Figure 3-4. Lamp Module and Detector Detail.....3-9
Figure 3-5. Schematic of Pilot Test Unit. 3-10
Figure 3-6. Influent Mixer Location. 3-11
Figure 4-1. Flow Schematic for Conducting this Reuse ETV. 4-4
Figure 4-2. Schematic of Sampling Locations.....4-7
Figure 4-3. HydroQual Collimator Apparatus for Conducting Dose Response Tests.....4-11
Figure 4-4. Average intensity in the Aquaray reactor as a function of transmittance. 4-16
Figure 4-5. Example MS2 Dose-Response Correlation.....4-40
Figure 4-6. Example Relationship of Dose and Hydraulic Loading.....4-42
Figure 5-1. Key Technical and QA/QC Personnel for this ETV. 5-7
Figure 5-2. Sampling and Monitoring Points. 5-10

TABLES

Table Page

Table 3-1. ETV and Scaled Flow Conditions. 3-6
Table 4-1. ETV Task Summary. 4-3
Table 4-2. Transmittance Reduction Calculation Results 4-17
Table 4-3. Flow Rates for Bioassay Test. 4-18
Table 4-4. Testing Schedule and Relevant Operating Conditions 4-20
Table 4-5. Analytical Schedule 4-21
Table 5-1. Description of Parameter Measurements 5-8
Table 5-2. Summary of Required Measurements and Sample Preservation. 5-9
Table 5-3. Summary of Standard Methods and Procedures 5-14
Table 5-4. QA/QC Objectives for Analyses Performed by HydroQual. 5-16
Table 5-5. Coliphage Enumeration QA/QC Criteria. 5-16
Table 5-6. Dose Response QA Criteria 5-17
Table 5-7. Reporting Requirements For Chemical/Physical Measurements 5-18

SECTION 1

INTRODUCTION

1.1 ETV OBJECTIVES

The Environmental Technology Verification (ETV) program was created to accelerate the development and commercialization of environmental technologies through third party verification and reporting of performance. The goal of the ETV program is to verify performance characteristics of commercial-ready environmental technologies through the evaluation of objective and quality assured data so that potential buyers and regulators are provided with an independent and credible assessment of the technology that they are buying or permitting.

Disinfection for secondary effluent and reuse application has been identified as one of the technology categories to be verified under the EPA/NSF ETV Source Water Protection Technologies Pilot.

This Verification Test Plan (VTP) applies to ultraviolet radiation technologies that meet the general criteria set forth in the "Generic Verification Protocol for Secondary Effluent and Water Reuse," (HydroQual, Inc., September 2002). Details of this VTP focus on the selected Field Test Organization (FTO) and the generic verification protocols are modified to reflect a specific disinfection system provided by an independent vendor. Guidance is provided on the conduct of the testing, data reduction and analysis, and reporting required to validate the particular technology.

There are three major UV system operation and performance elements addressed in the Generic Protocol, comprising up to 10 individual verifications. A vendor may choose to conduct verifications covering any one or combination of these test elements:

1. **Dose-Delivery Verification**
   Quantitative assessment of the ability of the UV equipment to deliver dose at liquid UV transmittances (at 254 nm) that are representative of the desired application(s)

   a. Secondary Effluent
      - 55% Transmittance
      - 65% Transmittance
      - 75% Transmittance
   b. Reuse Applications (Based on NWRI/AWWARF 2000)
      - Granular or Fabric Media Filtered Effluent – 55% Transmittance
      - Membrane Filtered Effluent – 65% Transmittance
      - Reverse Osmosis Effluent – 90% Transmittance

2. Dose-Delivery Reliability Verification

a. Quartz Surface Maintenance

Assessment of the efficacy of a UV systems automatic cleaning device to consistently maintain the quartz surfaces in a clean state, efficiently transmitting the UV energy to the liquid.

b. System Reliability

System response control and a qualitative assessment of UV system monitors, alarms and/or indicators.

c. Process Control

The ability of the UV system to automatically monitor and/or adjust UV doses to changing conditions.

3. UV Design Factor Verification

a. Quartz-Fouling Factor Determination

Quantitative determination of the long-term attenuation factor for quartz transmittance losses.

b. Lamp-Age Factor Testing

Quantitative determination of the relative UV output after continuous normal operation for the vendor-prescribed effective life.

Under this VTP, ONDEO DEGREMONT Inc. will verify performance of their UV system for reuse applications at 55% and 65% only. Verification at 90% will not be conducted. As such, only one major test element, dose delivery is addressed in this VTP. Recall from the generic protocol, dose delivery is defined as the ability of a specific system to deliver an effective dose to meet a selected level of inactivation. This is accomplished by determining the system's "delivered dose," that is the dose actually received by the microbes in the wastewater, using a bioassay procedure.

This verification test plan implemented for ONDEO DEGREMONT, Inc. addresses the dose delivery capabilities for reuse applications where the pretreatment of the water involves media filtration (55% transmittance) and membrane filtration (65% transmittance). This test plan does not involve verification for reuse applications where reverse osmosis is used as a pretreatment option.

In addition, dose-delivery is directly related to the hydraulic behavior of the reactor. Therefore, velocity profile measurements will be developed and headlosses measured as a means of assessing the reactor's conformance to acceptable near-plug flow conditions.

SECTION 2

ROLES AND RESPONSIBILITIES OF PARTICIPANTS IN THE VERIFICATION TESTING

2.1 NSF INTERNATIONAL (NSF)

The Source Water Protection Technologies ETV Pilot is administered through a cooperative agreement between USEPA and NSF International, INC. (NSF), its verification partner organization. NSF administers the Pilot, and has selected a qualified Field Testing Organization (FTO), HydroQual, Inc. to develop and implement this Verification Test Plan (VTP).

NSF's other responsibilities include:

- Review and approval of the VTP;
- Oversight of quality assurance including the performance of technical systems and data quality audits as prescribed in the Quality Management Plan;
- Coordination of verification report peer reviews including review by the Stakeholder Advisory Group and Technology Panel;
- Approval of the Verification Report;
- Preparation and dissemination of the Verification Statement.

Key contacts at NSF relating to this VTP include:

Mr. Thomas Stevens, Program Director
Ms. Maren Roush, Project Coordinator
NSF International
789 Dixboro Road
Ann Arbor, MI 48105
(734) 769-5347
stevenst@nsf.org

2.2 U.S. ENVIRONMENTAL PROTECTION AGENCY (USEPA)

The USEPA's National Risk Management Research Laboratory provides administrative, technical and quality assurance guidance and oversight on all Source Water Protection Technologies Pilot activities. The USEPA will have review and approval responsibilities through various phases of the verification project:

- Verification Test Plan
- Verification Report
- Verification Statement
- Dissemination of the Verification Report and Verification Statement

Key USEPA contacts for this specific VTP are:

Mr. Ray Frederick
USEPA – NRML Urban Watershed Management Branch
2890 Woodbridge Avenue (MS-104)
Edison, NJ 08837-3679
(732) 321-6627
(732) 321-6640 (fax)
Frederick.ray@epamial.epa.gov

2.3 FIELD TESTING ORGANIZATION (FTO), HYDROQUAL, INC.

The selected FTO is HydroQual, INC., Mahwah, New Jersey. HydroQual has a well-established, international reputation for expertise in the area of ultraviolet disinfection technologies.

Mr. O. Karl Scheible, Project Director, will provide overall technical guidance for the verification test program. Mr. Egon T. Weber II, Ph.D. will serve as Project Manager and be responsible for day-to-day operations, project administration, and lab setup and oversight. Mr. Michael C. Cushing will be the lead field-technician, responsible for system installation, startup, sampling and record keeping. Mr. Prakash Patil and Ms. Tina McKay will be the project microbiologists. Other HydroQual personnel who will have support roles during the verification project include Ms. Joy McGrath (QA/QC Officer) and Messrs. Wilfred Dunne, and Francisco Cardona (Field/Lab Support). HydroQual may also use additional in-house staff as required.

HydroQual's responsibilities include:

- Develop the VTP in conformance with the generic protocol, including its revisions in response to comments made during the review period;
- Coordinate the VTP with the Vendor and NSF, including documentation of equipment and facility information and specifications for the VTP;
- Contract with sub-consultants and general contractors as needed to implement the VTP;
- Coordinate and contract, as needed, with the Host test facility and arrange the necessary logistics for activities at the plant site;
- Manage the communications, documentation, staffing and scheduling activities to successfully and efficiently complete the verification;
- Oversee and/or perform the verification testing per the approved VTP;
- Manage, evaluate, interpret and report the data generated during the verification testing;
- Prepare and review of the Draft Verification Report.

HydroQual's main office is located in Mahwah, New Jersey and has a staff of nearly 110. The mailing address is:

HydroQual, Inc.
One Lethbridge Plaza
Mahwah, New Jersey 07430
(201) 529-5151
(201) 512-3825 Fax
http://www.hydroqual.com

Dr. Weber will be the primary contact person at HydroQual.

Telephone extension: 7401 or

Email: eweber@hydroqual.com

Mr. Scheible can be reached at extension 7378 or

Email: kscheible@hydroqual.com

2.4 ETV HOST SITE PARSIPPANY TROY-HILLS WASTEWATER TREATMENT PLANT

The host facility for conducting this ETV will be the Parsippany Troy-Hills (PTRH) Wastewater Treatment Plant located in Parsippany, New Jersey.

The host facility's responsibilities include:

- Dedicating the required area(s) for test equipment and setup;
- Provide reasonable access to the facility for non-plant employees;
- Provide some logistical support including personnel and/or equipment;
- Review, approve and/or assist activities affecting the plant, such as electrical connections from plant main feed.

The plant is located at:

1139 Edwards Road
Parsippany, New Jersey 07054
(973) 428-7953

Mr. Phil Bober, P.E., is the designated ETV liaison for PTRH. He can be reached at the above telephone number.

Figure 2-1 shows the project area dedicated for ETV testing at the plant. Figures 2-2 and 2-3 show a more detailed site plan and a test facility schematic.

2.5 UV TECHNOLOGY VENDOR ONDEO DEGREMONT INC. (ODI)

The UV system to undergo verification is provided by is provided by ODI and represents a ¼ scale pilot of their Aquaray 40 HO VLS UV System. ONDEO DEGREMONT Inc.'s responsibilities will include:

- Provide the test unit for verification and all ancillary equipment, instrumentation, materials and supplies necessary to operate, monitor, maintain and repair the system;
- Provide documentation and calculations necessary to demonstrate the system's conformity to commercial systems, hydraulic scalability and to the requirements to the protocol;
- Provide descriptive details of the system, its operation and maintenance, its technical capabilities and intended function in wet weather applications;
- Provide technical support for the installation and operation of the UV system including designation of a staff technical support person and an on-site technician for training and system startup;
- Certify that installation and startup of system is in accordance with the manufacturer's recommendations;
- Review and approval of the VTP; and
- Review and comment on the Verification Report and Verification Statement.

ODI is located in Richmond, Virginia at the following address:

ONDEO DEGREMONT INC.
510 E. Jackson Street
Richmond, Virginia, 23219
(804) 521-7460
(804) 225-8121 Fax

Mr. Bruno Ferran will be the primary contact for ONDEO DEGREMONT Inc. He can be reached at above telephone number or

Email: ferranb@denard.com

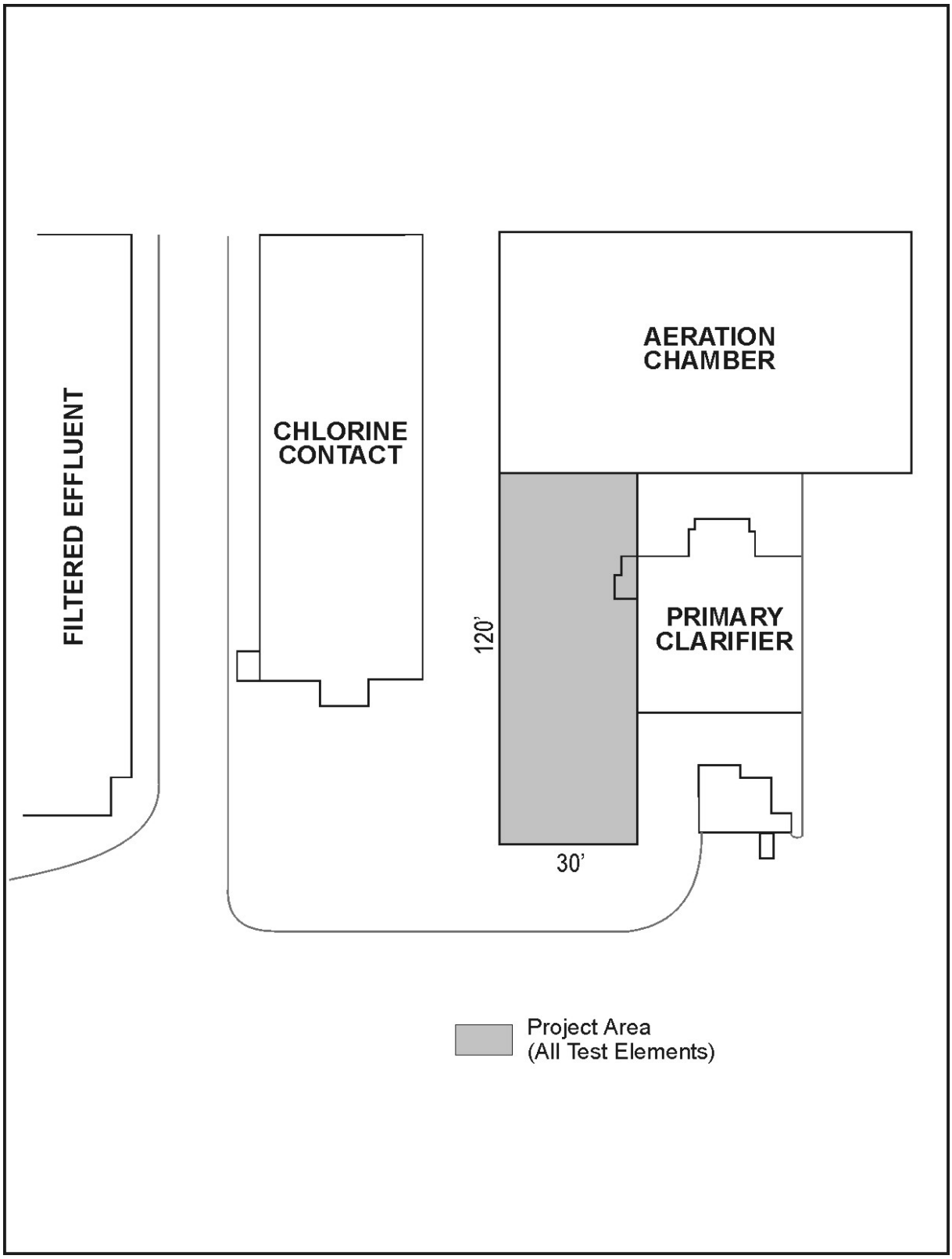

Figure 2-1. Project Area for ETV Testing at the Parsippany-Troy Hills WWTP.

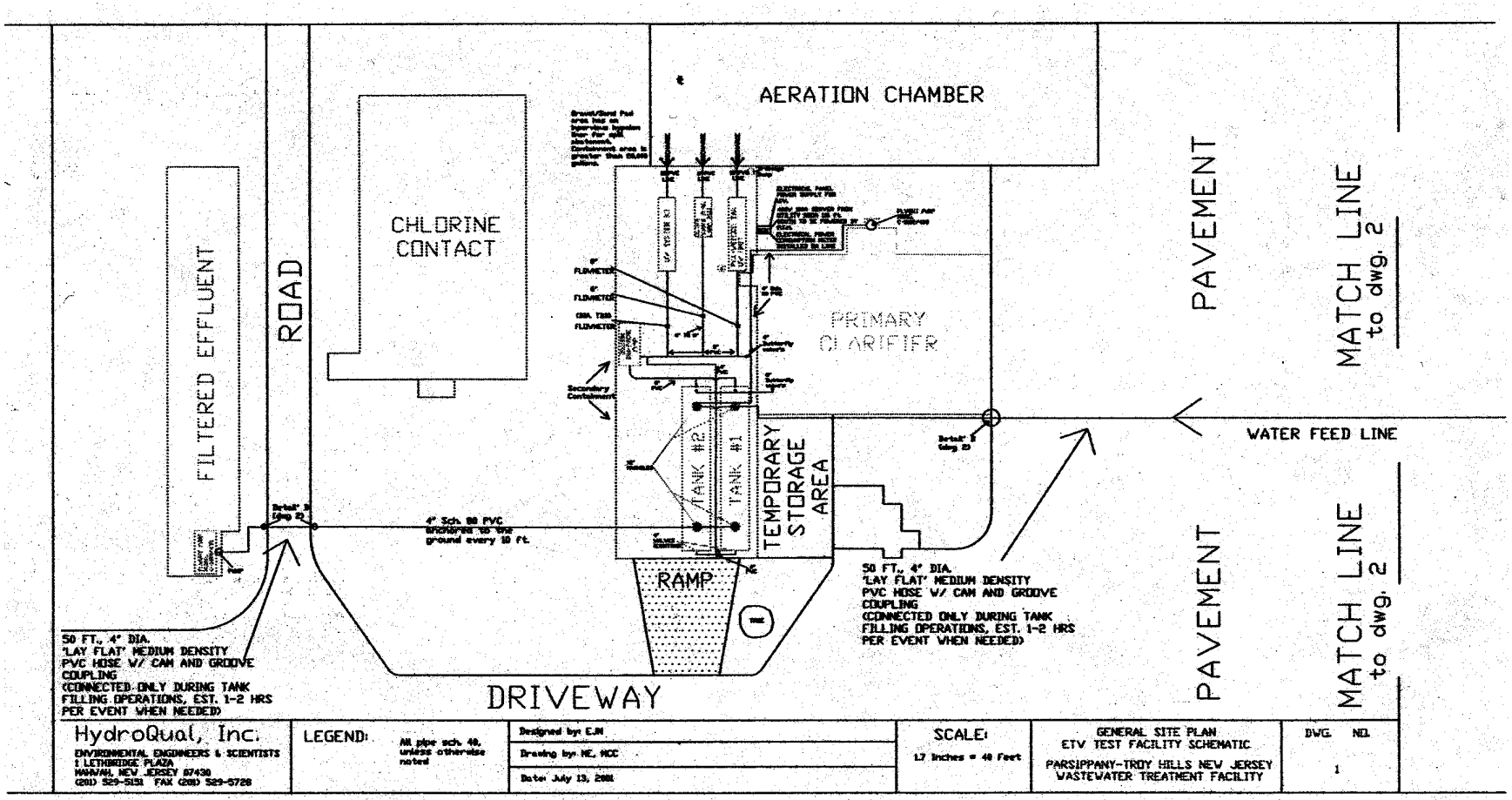

Figure 2-2. General Site Plan of the ETV Test Facility at the Parsippany-Troy Hills WWTP

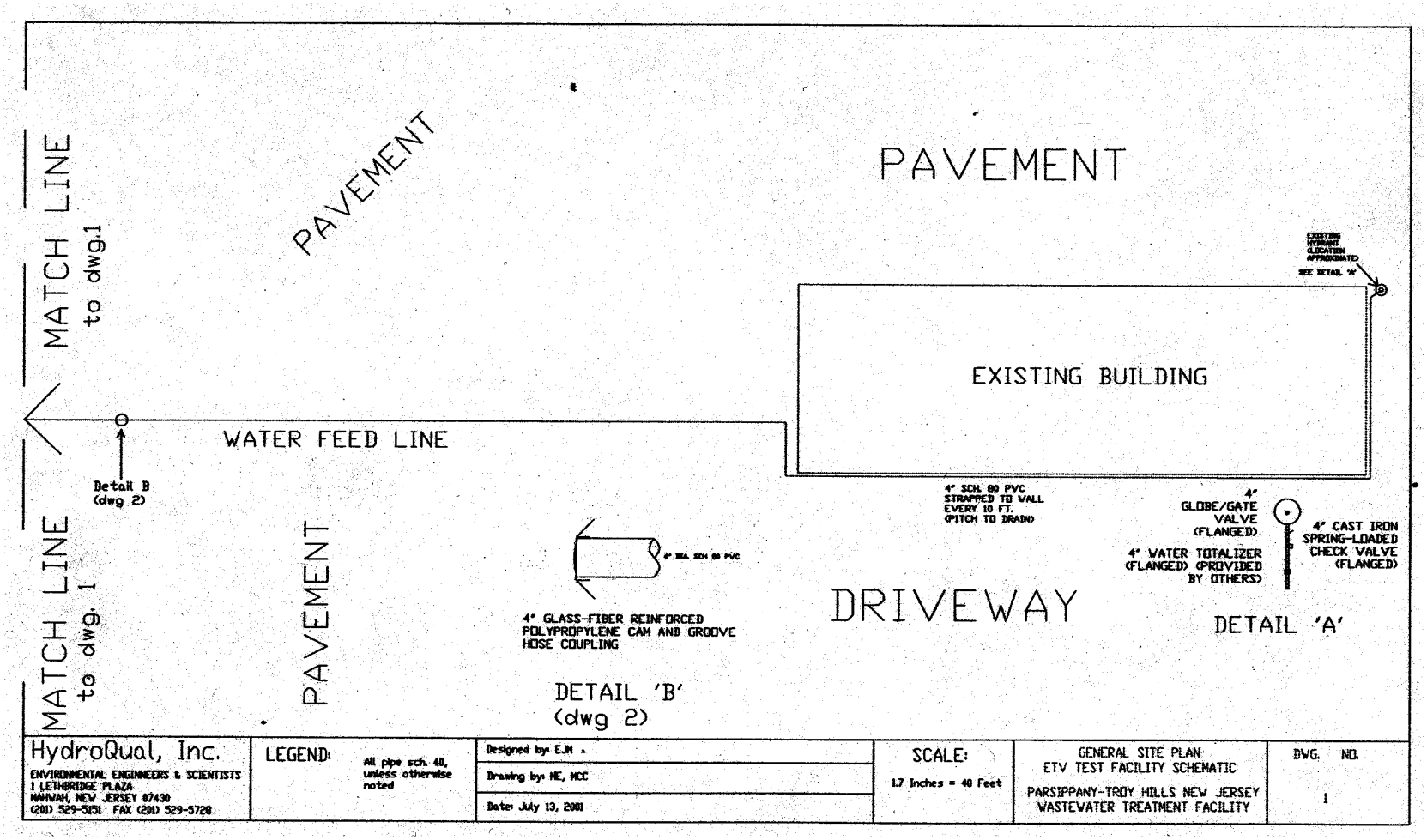

Figure 2-3. General Site Plan of the ETV Test Facility at the Parsippany-Troy Hills WWTP

2.6 SUPPORT ORGANIZATIONS

The FTO has identified one other organization that will provide support for activities that cannot be provided by NSF, EPA, HydroQual or ONDEO DEGREMONT, Inc. This organization will be a subcontractor of and subordinate to HydroQual.

International Light, Inc.
17 Graf Road
Newburyport, Massachusetts 01950
Photodetector and radiometer calibrations

2.7 TECHNOLOGY PANEL ON HIGH-RATE DISINFECTION

The ETV Technology Panel on High Rate Disinfection will serve as a technical and professional resource during all phases of the verification, including the review of test plans and the issuance of verification reports.

SECTION 3

TECHNOLOGY DESCRIPTION

3.1 ONDEO DEGREMONT INC. UV DISINFECTION SYSTEM

3.1.1 Lamps and Sleeves

The Aquaray® 10 HO VLS UV unit supplied by ONDEO DEGREMONT Inc. utilizes high-output, low-pressure mercury discharge lamps (ODI P/N 61645.GO2), oriented vertically and perpendicular to the direction of flow. Each lamp has a UV output rating of approximately 52 Watts at 254 nm, a total power draw of up to 165 Watts, and an effective arc length of 145.5 cm.

Each lamp is housed in a sleeve composed of clear fused quartz (GE214) to isolate and protect the lamp from the wastewater. The sleeves have only one open end, which remains exposed only to the conditions in the sealed stainless-steel ballast housing (see Figure 3-3). These quartz sleeves are 170.2 cm long, have an outer diameter of 24.4 mm, and a wall thickness of 1.26 mm resulting in a UV transmittance of approximately 90%.

The lamps and sleeves are identical to those used in the full-scale the Aquaray® 40 HO VLS UV system.

3.1.2 Lamp Aging

Lamp aging tests have been conducted following the NWRI/AWWARF (2000) protocol. In brief, seven lamps, each from two different lots (14 lamps total) were operated under controlled conditions to determine the change in lamp intensity as the lamps aged through 9205 hours of operation and 1057 to 1604 on/off cycles. The intensity outputs of these 14 lamps were measured approximately every two months after allowing them to warm up for one hour.

The data for the lamp intensities are shown in Figure 3-1 along with the average trend of the fourteen lamps; the data are presented normalized to the intensities measured after a 100-hour burn-in. The data at 5326 hours are suspect because the subsequent cleaning of the chamber and the optics returned the intensities to higher values. In general, the natural variability of the lamp intensity measurement is greater than the trend of lamp aging; as such, the lamp intensity did not change a significant amount over the 9205-hour period. However, the variability of the valid lamp intensity measurements encompasses values down to 90% of the original, 100 h, intensities. On this basis, the chosen end-of-life (EOL) lamp factor for this ETV will be 0.9.

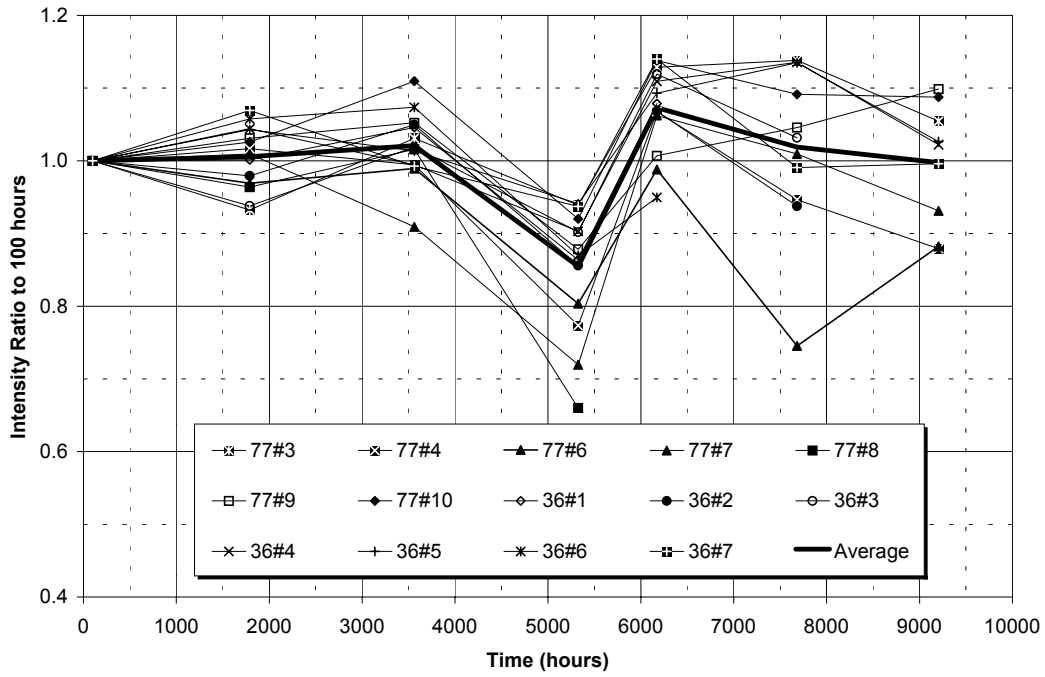

Figure 3-1. Lamp Intensity as a Function of Age.

3.1.3 Lamp Intensity vs. Temperature

The UV output of low-pressure lamps varies somewhat depending on the temperature of operation, which is directly related to the temperature of the water in which the lamps are submerged. Thus, the temperature under which both verification testing and final application are conducted must be addressed.

ODI has conducted experiments to determine the variability of lamp intensity as a function of water temperature. The test apparatus consisted of a chamber that housed a standard lamp in a standard quartz sleeve that was immersed vertically in water. A chiller unit controlled the temperature of the water, and lamps were allowed to heat up for one hour before intensity measurements were made. The intensities of three lamps were monitored at four different water temperatures, and at four different distances from the end; the same ballast was used for all tests.

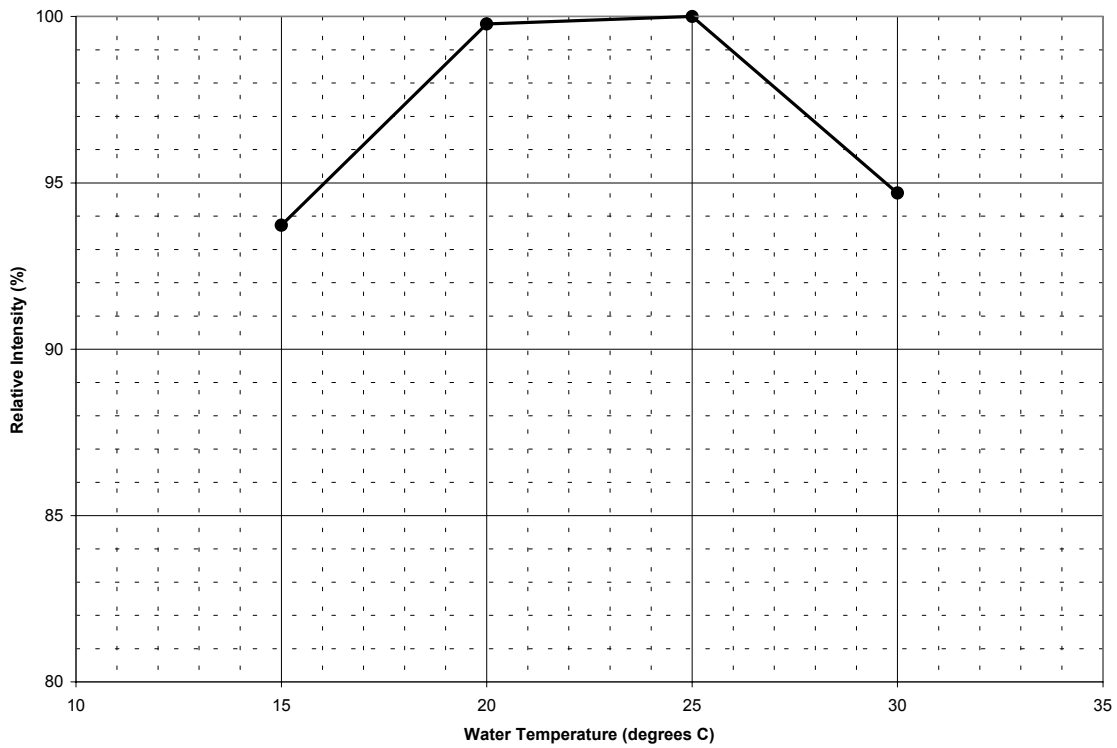

Figure 3-2. Relative Lamp Intensity as a Function of Water Temperature.

The average intensity data is shown in Figure 3-2 as a percentage of the maximum intensity. The intensity varies as a function of the water temperature. Applications of this disinfection technology will typically be employed with water temperatures in the range of 15 to 30° C. Under these conditions, the intensity output of the lamps should not decrease by more than 7% from their maximum output at 20°C to 25°C.

3.1.4 Lamp Modules

The pilot system consists of 3 modules with 10 lamps each mounted inside a rectangular frame with baffles. The lamps are positioned in a staggered rectangular array with centerline spacing of 7.14 x 12.7 cm to duplicate ¼ of the Aquaray 40 HO VLS (Figure 3-3, 3-4). The lamp modules are completely surrounded by a rectangular frame that supports the lamps sleeves at the top and bottom ends. A small baffle is present with each lamp pair.

3.1.5 Sleeve Cleaning System

The test modules are not equipped with the sleeve cleaning system or the ODI patented air scrub found with the full-scale modules, as there is no validation test planned for this equipment.

Nevertheless, the wiper drive rod has been added to each test module to simulate related head loss and hydraulic behavior.

3.1.6 Electrical Controls

The lamps are powered from electronic ballasts (ODI P/N 61862.GO1) mounted vertically in a NEMA 4X enclosure that is located on top of each module. Each ballast powers two lamps in parallel so that one lamp failure does not cause the peer lamp to turn off. The ballast controls are located in the control cabinet. A separate circuit powers each lamp module so the failure of one lamp module will not deactivate the other two. The ballast/control panel does not allow for lamp power dimming. In fact, it is part of the ballast specification to keep the lamp power steady during fluctuation of the line voltage.

The control cabinet supplied for the test unit is simpler than that offered commercially. However, for the purpose of this ETV, critical operational variables such as lamp output do not differ from the commercial unit. The main enhancement of the commercial control panel is one of operator convenience where parameters such as lamp-hours, on/off cycles, lamp failure, flow rates, and UV intensity are monitored and recorded with a computerized user interface. The control cabinet supplied for this ETV is powered via a 480V delta power supply and has separate circuits for each lamp module.

3.1.7 UV Detectors

SWW1 (ODI P/N 61848.GO1) UV sensors are included in both the pilot and full-scale systems. Each lamp module has a sensor located approximately 12" below the water surface and 0.61 inches from a lamp sleeve (Figure 3-4). Each sensor includes a remote, dedicated amplifier that operates on 12 VDC with an analog signal output between 0 and 5 VDC. The sensors have a wavelength selectivity of 96% between 200 nm and 300 nm and a linear (1%) working range of 0.01 to 20 mW/cm^2. The stability of the sensor is 5% over 10 hours and a range of temperatures from 2 to 30°C.

The control cabinet for the pilot test unit has three digital displays that show the voltage output real-time. The control cabinet also contains a dedicated power supply for the sensor amplifiers.

Although the verification of the detectors is not an element of this test plan, the intensity measured by these detectors will be monitored during the tests.

3.1.8 Design Operational Envelope

The Aquaray system is employed for a variety of wastewater disinfection applications. Upon set-up of a full-scale reactor, the intensity monitors can be set for an appropriate reading depending upon the application. Then the intensity alarm can be set to activate when a low dose condition

exists. Three common factors can contribute to the low dose condition: (1) End of lamp life (8500 hours recommended); (2) Quartz sleeve fouling; or, (3) low transmittance conditions. The exact settings will depend on the exact application requirements.

In terms of intensity reduction due to lamp aging and quartz fouling the suggested operational protocols comply with the conditions in this ETV. Quartz fouling of 80% and lamp age intensity reduction of 90% (at 92000 hours) are simulated during this ETV and are the conditions under which the typical full-scale set up would generate a low intensity alarm.

A typical full-scale reactor train would consist of three or more lamp modules. As the dose delivery conditions deteriorate (due to high flows or intensity reduction) additional, upstream, lamp modules would be progressively brought online. In this setting, the first lamp module also functions as a stilling plate.

3.2 UV PILOT TEST UNIT SPECIFICATIONS

3.2.1 Test Channel

The reactors are housed in an open stainless steel channel 26 ft. long (Figure 3-5). The untreated water enters the channel via a 12" wide by 7 feet high section. A baffle located 1.5 feet from the water inlet pipe breaks the flow and spreads it in over the submerged cross section of the channel. After 3 feet the channel narrows from 12" to 7", and the height of the channel decreases from 7 feet to 6 feet. The first test module (test module #3) is located 3.5 feet downstream of the channel narrowing. The space between each test module is 2 feet as in full-scale systems. 3.5 feet after the final lamp unit, the channel width increases from 7" back to 12". It should be noted that the width of the full-scale channels does not change in the direction of the flow.

Although the test channel allows orifice plates to be used in the influent and effluent end, this ETV will not use any. Indeed, to simulate worst-case influent hydraulics is an important part of this verification. The flow in the influent channel will be stabilized somewhat via the addition of a mixer installed as in Figure 3-6. On the 350 RPM mixer shaft is mounted a 3-bladed impeller with a pitch of 45° and a diameter of 5.9 inches.

3.2.2 Scaling Considerations

The Aquaray 10 HO VLS system to be tested is a ¼ scale unit to validate the dose delivery of the full-scale Aquaray 40 HO VLS system. The lamps, ballasts, and sleeves are identical to those used in the full-scale system. The lamp assemblies are installed in a channel under conditions identical to commercial applications with respect to lamp spacing, distance from channel walls, and lamp submergence (Figure 3-4).

Other operational conditions that are directly scalable because of the 4x size up are the number of lamps (10 vs. 40) and the flow velocities, which are identical under the scale up assumptions.

The only geometric difference between the pilot and full-scale modules is present in the baffles. Both lamp modules have five baffles only along the sides of the channel, thus the baffles play a smaller role in the full-scale unit. In this light, the pilot-scale lamp modules have baffles that are 1.39 inches wide while the full-scale lamp modules have baffles 1.59 inches wide. This more closely matches the resulting headloss and velocity profiles between the full and pilot-scale modules.

The flow rates in this ETV are compared with those in the full-scale reactor in Table 3-1. The Aquaray 40 HO VLS system is intended to operate in conditions up to 4.3 MGD if dose delivery considerations allow; the high flow rate (750 gpm) is just over the typical maximum operation range of such full-scale units. However, in most cases, the flow rate would be lower. As such, this ETV is a simulation of dose delivery in full-scale units with flow rates between 0.86 and 4.32 MGD.

Table 3-1. ETV and Scaled Flow Conditions.

Full Scale Aquaray 40	¼ Scale Aquaray 10 Pilot Unit	¼ Scale Aquaray 10 Pilot Unit
(MGD)	(MGD)	(gpm)
0.86	0.22	150
2.02	0.50	350
2.59	0.65	450
3.17	0.79	550
4.32	1.08	750

3.3 VERIFICATION TEST CLAIMS

The overall objective of this ETV is to validate disinfection performance of the ONDEO DEGREMONT Inc. Aquaray 40 HO VLS UV System for water reuse applications. The nominal transmittances of the specific application waters will be adjusted to simulate sleeves that are fouled to 80% transmittance, lamp intensities that are reduced to 90%, and lamp intensity adjusted for optimum temperature conditions. Within this goal, four specific objectives are identified:

1) Verify the flow-dose relationship for the system at a nominal UV transmittance of 65% to simulate membrane-filtered effluent. Note: the actual transmittance will be 56%.

2) Verify the flow-dose relationship for the system at a nominal UV transmittance of 55% to simulate granular filtered effluent. Note: the actual transmittance will be 46%.

3) Verify the dose delivered by the downstream lamp module (#1) by collection of samples disinfected only by lamp modules #2 and #3. These tests will be conducted at a nominal transmittance of 55% (actual 46%) for a granular filtered effluent simulation.

4) Verify the velocity profiles on the influent end, between lamp units #3 and #2, and the effluent end of the reactor train.

Note: the application of this disinfection system to reverse-osmosis filtered effluent will not be validated.

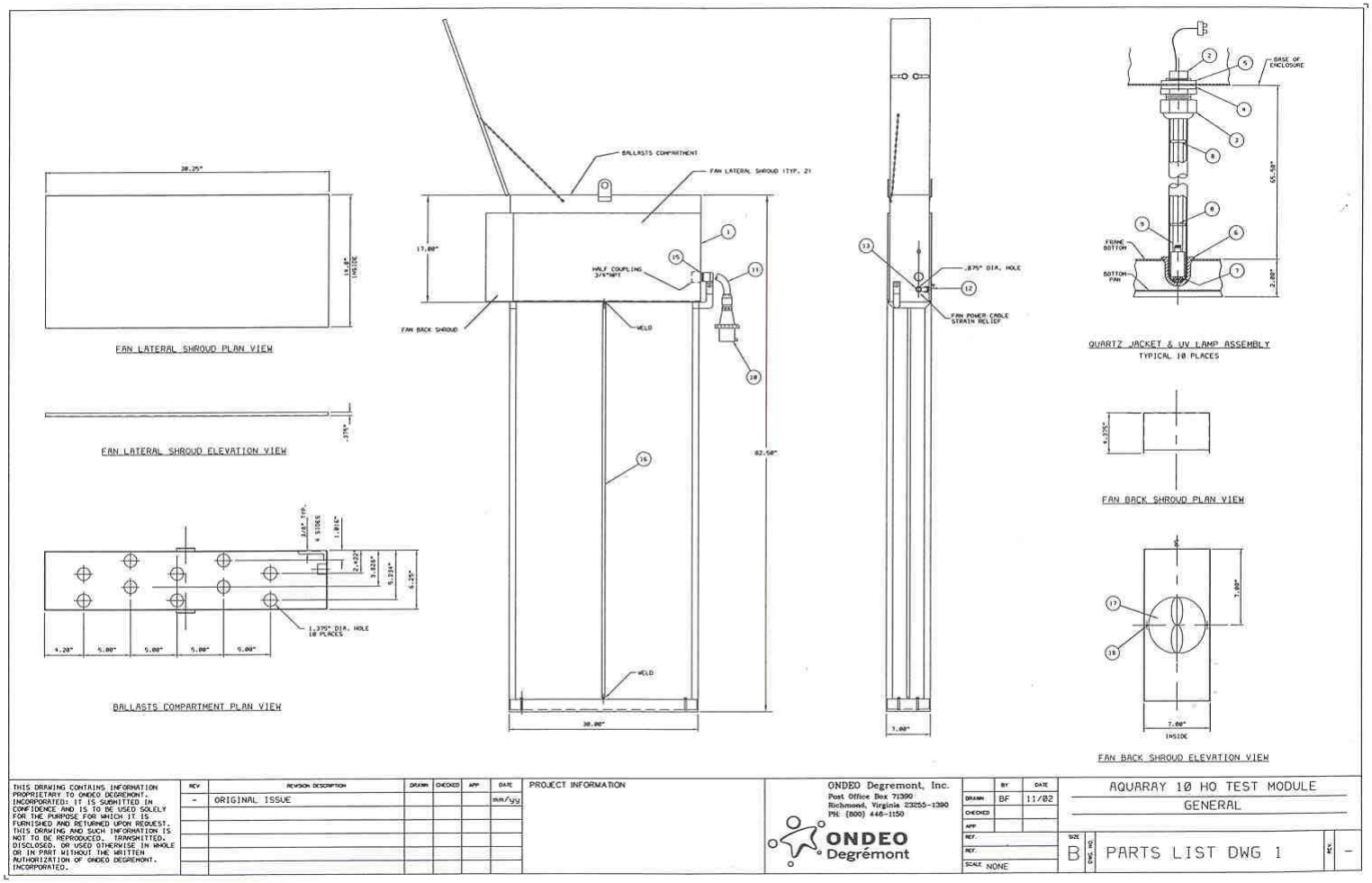

Figure 3-3. Lamp Module and Sleeve Assembly Detail.

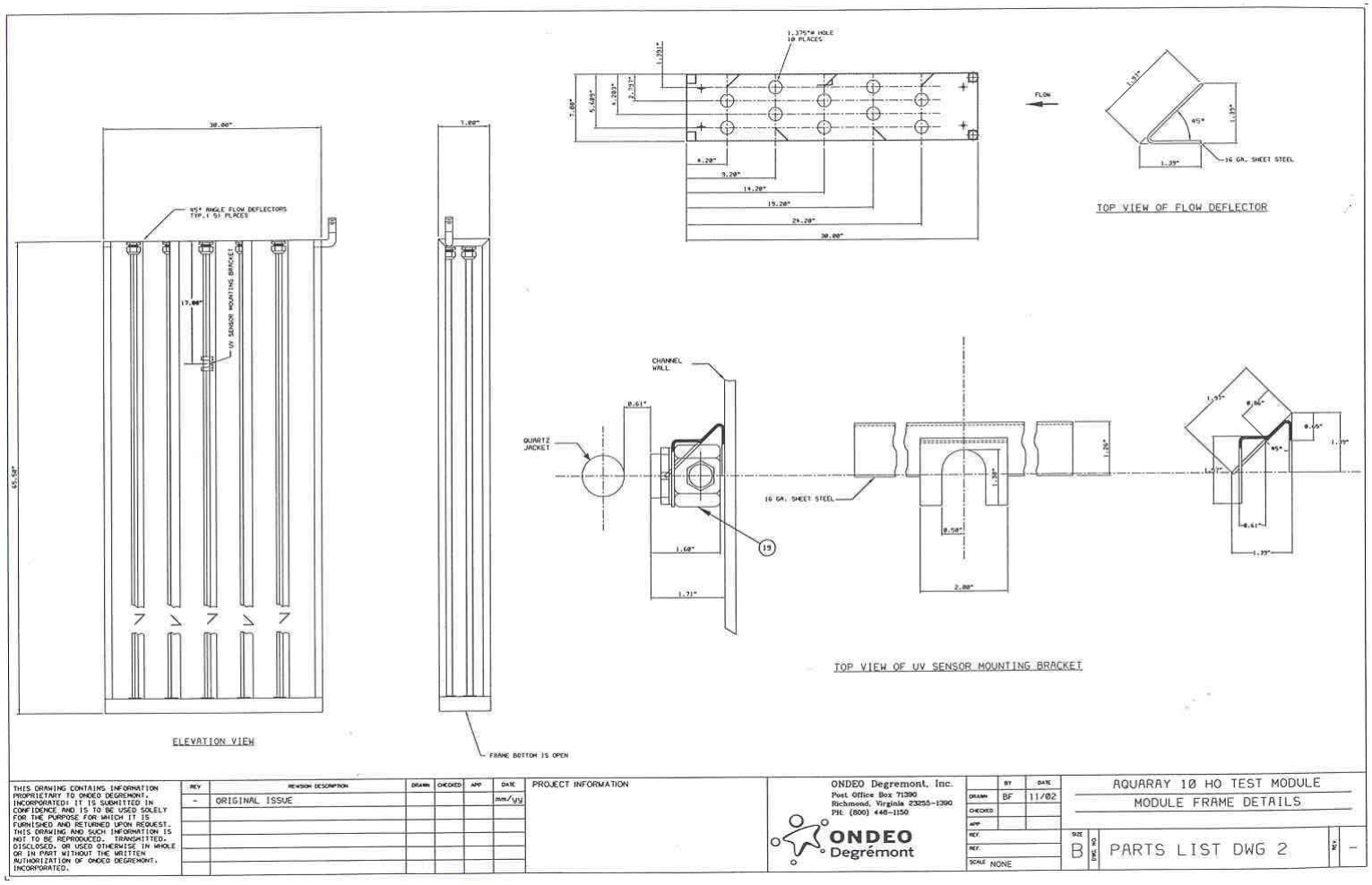

Figure 3-4. Lamp Module and Detector Detail.

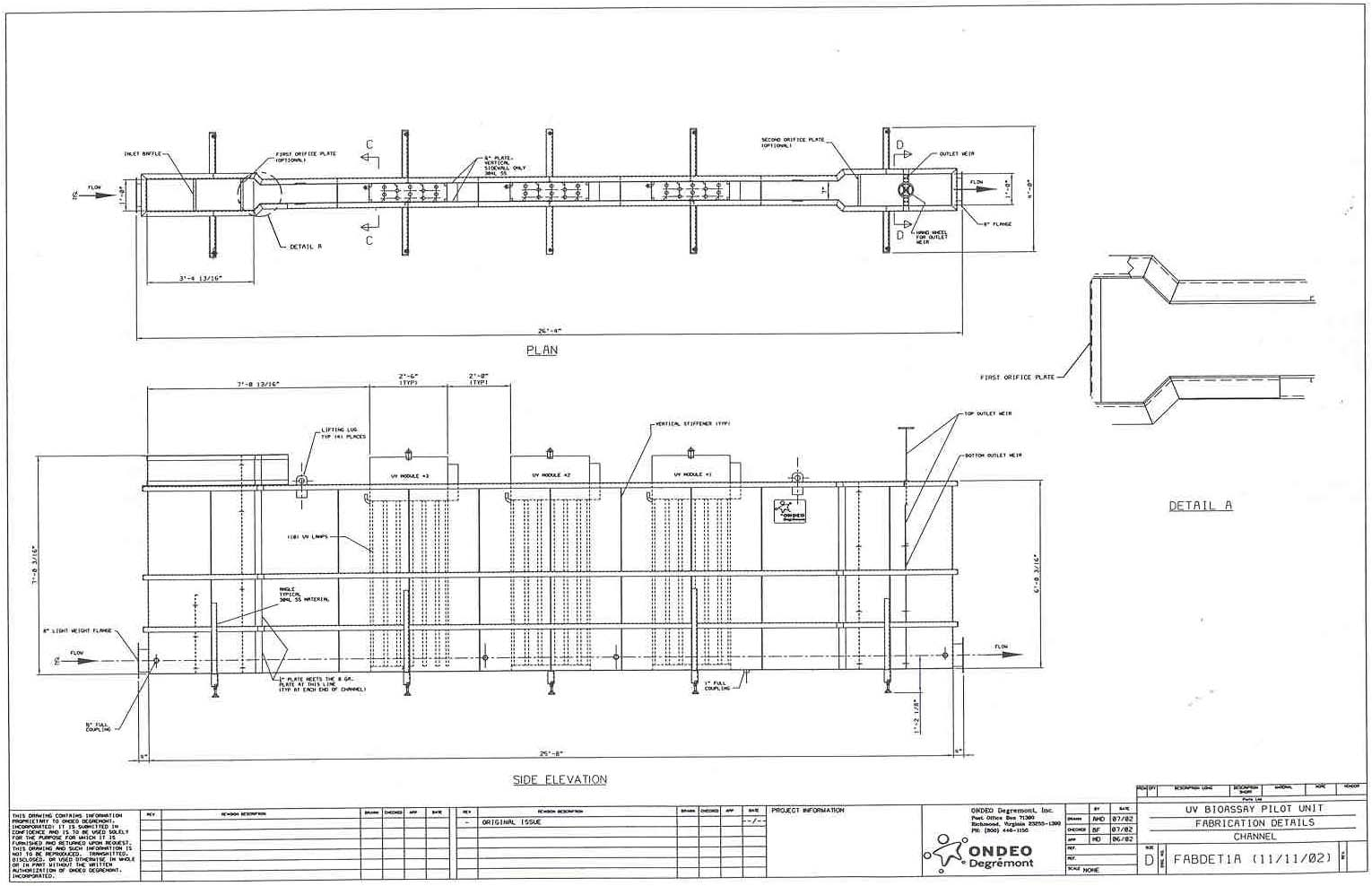

Figure 3-5. Schematic of Pilot Test Unit.

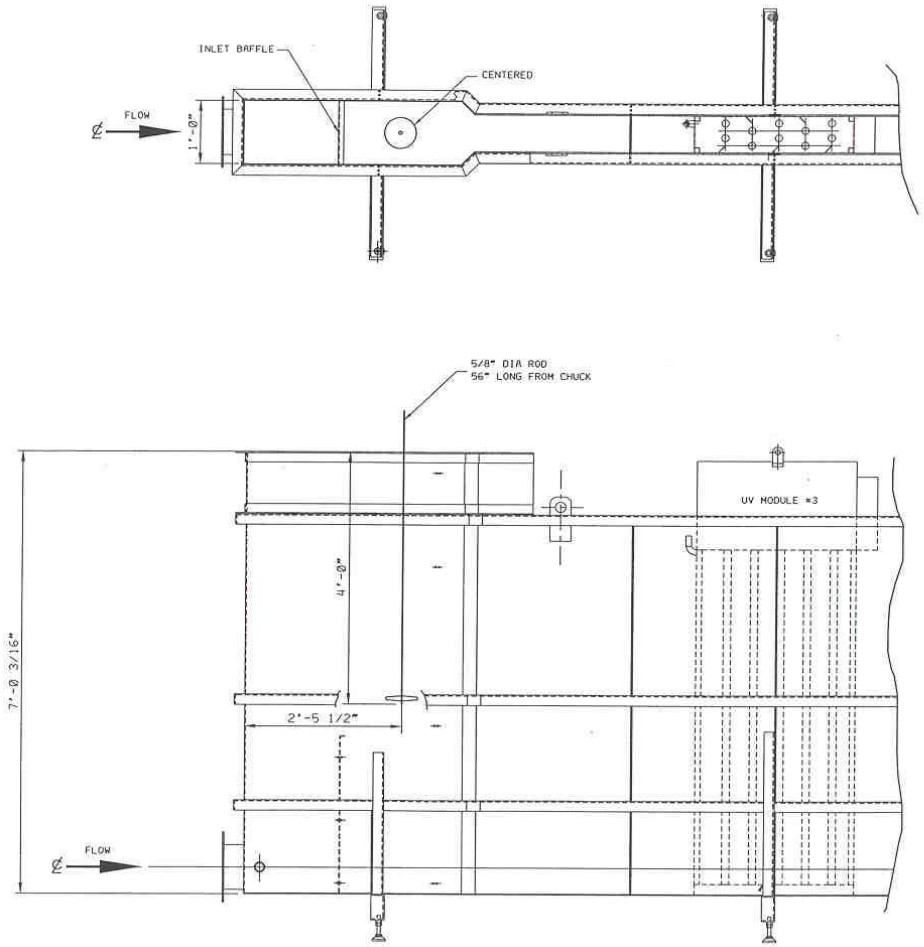

Figure 3-6. Influent Mixer Location.

SECTION 4

DOSE DELIVERY VERIFICATION TEST PLAN

4.1 GENERAL TECHNICAL APPROACH

By its nature, the effectiveness of UV is dependent on the upstream processes used for pretreatment, particularly for particle removal or reduction, and for oil/grease and organics removal. The design basis typically developed for a UV system application incorporates the characteristics of the wastewater to be treated, including particulates, the nature and size distributions of the particulates, bacterial levels to be disinfected, flow rates, and the UV transmittance (or, conversely, the absorbance) of the wastewaters. These conditions are all established to reflect a planned level of pretreatment, and the expected variability in quality and quantity. Finally, the dose required to meet specific target levels is determined, typically established from direct testing (e.g., collimated-beam, dose-response methods) of the wastewaters or similar wastewaters. Once this "design basis" is established, independent of the UV equipment, the next step is to select equipment that can meet these specific dose requirements under the expected wastewater conditions.

This ETV technical objective is met by demonstrating, or verifying, the ability of a specific system to deliver an effective dose. This is the "delivered dose", which is the dose actually received by the microbes in the wastewater. Although recent research has been directed to modeling the delivered dose (particularly methods utilizing computational fluid dynamics in conjunction with computed intensity fields), direct biological assay procedures have generally been used to estimate the delivered dose for specific reactor configurations, typically as a function of the hydraulic loading rate. The bioassay is a viable and accepted method and has been used successfully for many years, whereby the results are often applied to qualification requirements in bid documents for wastewater treatment plant applications.

The bioassay procedure uses a known microorganism, which is cultured and harvested in the laboratory and then subjected to a range of discrete UV doses. These doses are applied with a laboratory-scale, collimated-beam apparatus, which can deliver a known, accurately measured dose. Measuring the response to these doses (log survival ratio), a dose-response relationship is developed for the specific organism. A culture of the same organism is then injected into the large-scale UV test unit, which is operated over a range of hydraulic loadings (thus yielding a range of exposure times). The response of the organism can then be used to infer, from the laboratory-based dose-response relationship, the dose that was delivered by the UV unit. These tests are run in "clean" water (from a potable water supply) or granular filtered secondary effluent matrices, which have been adjusted by chemical means to mimic the UV transmittances expected under reuse conditions. In addition, effective disinfection is predicated on the acceptable hydraulic behavior within the UV

reactor. To this end, velocity profiles need to be developed and analyzed as a means for assessing the UV system's hydraulic behavior and scalability.

Table 4-1 presents a summary of the primary and support tasks that need to be completed under this Verification, and reference to pertinent VTP sections and protocols.

4.2 TEST FACILITY DESCRIPTION

4.2.1 Site Preparation Requirements

The designated host site is the Parsippany Troy-Hills Wastewater Treatment Plant located in Parsippany, New Jersey. All site preparations will be coordinated between HydroQual's project manager and the PTRH's designated project liaison.

The verification testing will take place at one central location at the plant allowing for access to primary, filtered secondary effluent, and potable water sources (refer to Figures 2-1 to 2-3).

Figure 4-1 presents the flow schematic for conducting the dose delivery verification assays. The major ancillary support needs include a batch tank, electrical sources, a pump, and appropriate water sources. Support instrumentation includes a flow meter, a radiometer with an appropriate UV sensor, power meter, power datalogger and datalogger for other operational parameters. Note that this setup is independent of the host-site.

Potable water for cleaning and test purposes is drawn from a local fire hydrant. The hydrant is piped (4-inch diameter Schedule 40 PVC with glued joints) to the batch tank. Water consumption is metered via an in-line totalizer. Filtered secondary effluent for test purposes is drawn from a filtered effluent line provided by the host site. The line is piped (4-inch diameter Schedule 40 PVC with glued joints) to the batch tank, with a diversion valve allowing filtered effluent to go directly to the UV system. At full open, the maximum water delivery capacity is approximately 300 gpm. All water that passes through the tank, pump and UV system is discharged into the aeration tank for biological treatment through a 8-inch diameter, Schedule 40 PVC discharge line from the UV unit.

Two 20,000-gallon (nominal) capacity mobile frac tanks will be provided by Adler Tank Rentals (Newark, New Jersey) or equivalent. The tanks have epoxy linings to prevent rusting. The tanks covers a footprint area about 50 feet by 9 feet and stands approximately 11 feet high. There are two six-inch flange outlet connections on the front and back of each tank. A four-inch diameter Schedule 40 PVC line serves as a recirculation loop and as a feed line to the main discharge pump. There is ladder access to the railed top area of the tanks where there are two 2-foot diameter access manways. These manways are where additives (e.g., transmittance-altering substances or challenge organisms) are added.

Flow from the batch tank to the UV system is through an automatic priming, diesel-powered centrifugal pump (Godwin Pumps, Inc., Bridgeport, New Jersey), Model Number CD150M or

equivalent. The pump has six-inch inlet and outlet flanged connections; based on estimated head losses, the maximum pump capacity is about 2000 gpm. The pump covers a footprint area about 6 ft by 10 ft.

Table 4-1. ETV Task Summary.

Task/Subtask	Pertinent VTP Section	Pertinent Protocols or Procedures
Site Installation Requirements	4.2.1, Figure 2-1 and 2-2	Appendix A
System Startup and Shakedown Flow Meter Calibration	4.3.3 and 4.3.3.1	Field Protocol – 1 Appendix C
Lamp Burn-In	4.3.3.2	Field Protocol – 2 Appendix C
Headloss Measurements	4.3.3.3	Field Protocol – 3 Appendix C
Power Consumption and Stability	4.3.3.4	Field Protocol – 4 Appendix C
Hydraulic Velocity Profiles	4.3.4	Field Protocol – 8 Appendix C
Shakedown Flows	4.3.3.5	Field Protocols – 5, 6 and 7 Appendix C
Dose Response Calibration		
Selection, Culturing and Harvesting of Test Organism	4.3.5.1	Special Laboratory Protocol – 1 Appendix D
Intensity Calibration for the Collimated Beam and Sensor	4.3.5.3	Special Laboratory Protocol – 2 Appendix D
Dose Response Test Procedure	4.5.5.5	Special Laboratory Protocol – 3 Appendix D
Dose-Flow Assays		
Test Batch Preparation	4.3.6.1	Field Protocol - 6 Appendix C
Set Quartz Surface Condition	4.3.6.2.1	Field Protocol - 5 Appendix C
UV Transmittance of Test Water	4.3.6.2.2	LM – 29, Field Protocol – 6 Appendix C
Lamp Output	4.3.6.2.4	N/A
Water Temperature	4.3.6.2.5	N/A
Hydraulic Loading Rates	4.3.6.2.6	N/A
Module Configurations	4.3.6.3.1, 4.3.6.3.1	N/A
Dose-Flow Assay Test Procedure	4.3.6.3.1, Tables 4-2 thru 4.4	Field Protocols 5, 6 and 7 Appendix C
System Monitoring	4.3.6.3.1.2	N/A

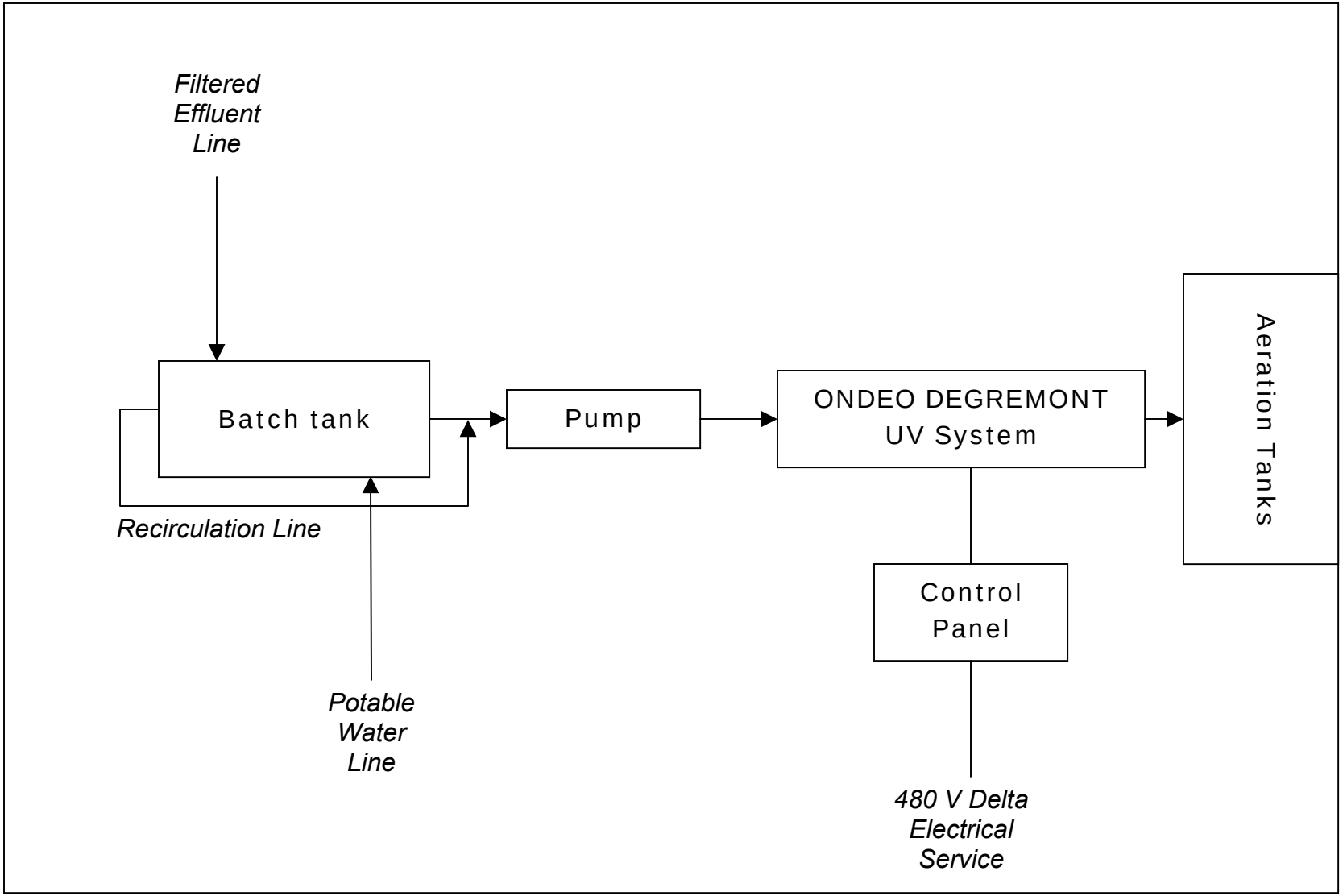

Figure 4-1. Flow Schematic for Conducting this Reuse ETV.

Metered direct electrical service is provided by the host site.

Flow metering is measured by a Fischer and Porter Model (10D1462) 6-inch diameter magnetic flow meter.

A critical measurement is the UV output of the system at 254 nm. This is measured by two different sensor systems:

1) An International Light Model 1700 Research Radiometer using an SED240 detector with a quartz wide-eye diffuser and NS254 narrow band filter. The detector was last calibrated by International Light in September 2002.

2) An SWW1 UV sensor device (ODI P/N 61848.GO1) is mounted on the center deflector of each lamp test module, at about 12 inches below the water line and 0.61 inches from the quartz sleeve.

Another important measurement is the UV transmittance of the test batch. A UV-Visible spectrophotometer (Shimadzu 1200) will be kept on-site for measuring the UV transmittance of samples. Transmittance will be verified at the lab with a Perkin-Elmer Lambda-6 spectrophotometer.

Technical specifications for the support equipment described in this section can be found in Appendix A.

4.2.2 Facilities

A small field trailer/office will be setup at the test site to provide copier needs, security for on-site equipment (e.g., radiometer and spectrophotometer), and storage area for supplies. The plant's restroom facilities are provided for use throughout the project duration.

4.2.3 Equipment and Supplies

Equipment needed to support the operation of the test facility, other than what may have already been described, include a forklift for moving heavy items (such as the UV test channel); this assistance will be provided by the host site.

HydroQual, Inc will provide the major supply items required to support the analytical and sampling needs of the ETV. Appendix B contains a copy of HydroQual's QA/QC manual, which includes general information pertaining to the treatability laboratory and appropriate method protocols. Equipment and supply needs associated with each analysis are presented within the description of each procedure.

4.3 OPERATING PLAN

The operating plan for the ETV verifications is comprised of several activities, some of which can be implemented simultaneously. These include the field and laboratory setup, UV

equipment installation, shakedown runs, verification test runs and demobilization and removal of the test units.

4.3.1 Field and Laboratory Setup

The field installation is essentially as shown on the plan layout (refer to Figure 2-1 and Section 4.2.1). No other support equipment or facilities will be necessary from those already described. The same system will be used for both the nominal 55% T and nominal 65% T dose-delivery verifications.

All laboratory analyses will be conducted at HydroQual's laboratory facility in Mahwah, New Jersey or in the field by HydroQual personnel. The laboratory is equipped to conduct all the analyses required under this ETV.

Some laboratory analyses, due to their nature, must be conducted on-site. This includes measurement of UV transmittance, detection of disinfection residual (total chlorine), pH, turbidity, and temperature. To this end, equipment for conducting these tasks will be maintained in a dedicated area of the field office.

4.3.2 Field Sampling Locations

There are four locations for the system that will be sampled. These are shown in Figure 4-2. Procedures for sampling and analysis are discussed in a later section.

All samples will be manually collected as grabs. A description of the sampling locations is as follows:

M1: Batch Effluent

Location M1 is the access manway on top of the batch tank.

S1: UV System Influent

Location S1 is a valve on the upstream portion of the UV reactor channel; samples represent well-mixed influent.

S2: UV System Effluent

Location S2 is a valve on the downstream portion of the UV reactor channel after the effluent weir. Samples are collected from a valve and represent well-mixed effluent.

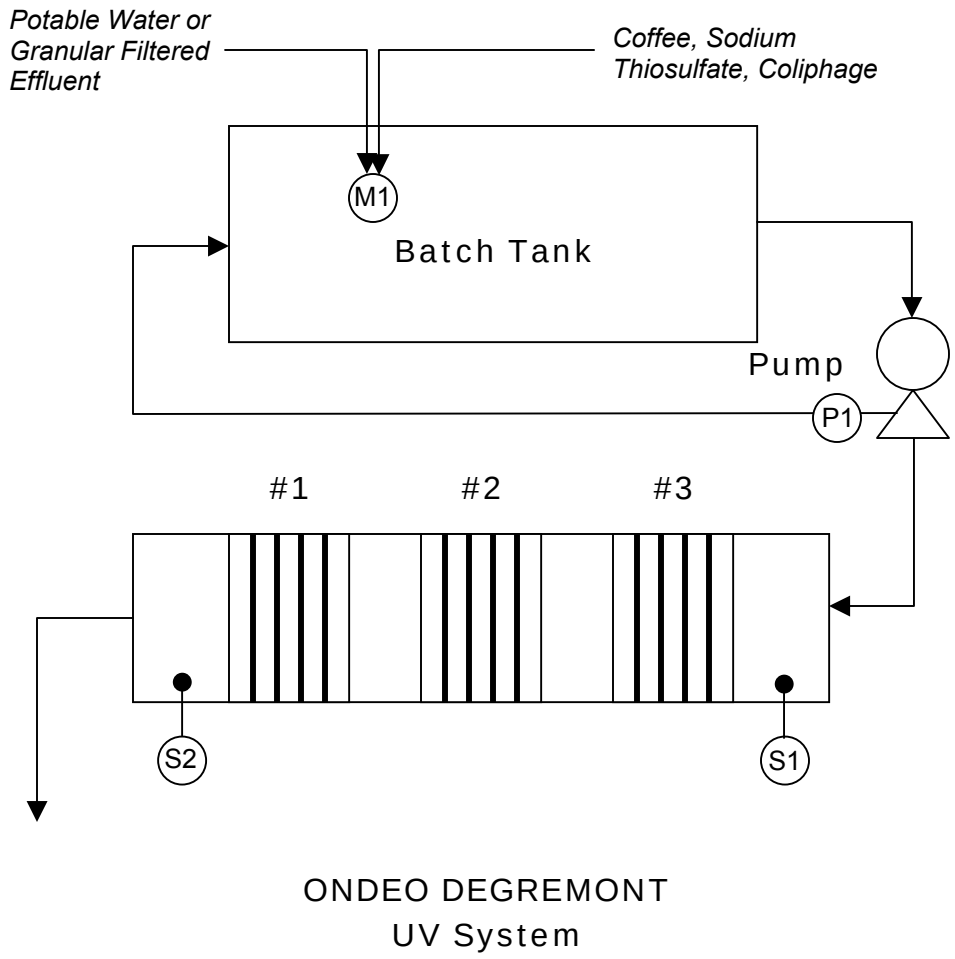

M1 – Batch Influent. Monitoring point taken periodically to confirm test conditions.

S1 – UV System Influent. A valve on the upstream part of the channel representing well-mixed influent.

S2 – UV System Effluent. A valve on the downstream side of the weir representing well-mixed effluent.

P1 – Pump Recirculation Line. A ball valve on the pump recirculation line to sample batch solutions.

Figure 4-2. Schematic of Sampling Locations.

P1: Pump Recirculation Line

Location P1 is a ball valve on the pump that allows sampling of the recirculating solution during batch mixing. This allows a sample to be taken without the technician climbing on top of the tank, thus enhancing operator safety. A comparison of samples taken here versus the manway shows no difference.

4.3.3 System Startup and Shakedown

System startup and shakedown encompasses tasks aimed at applying operating and sampling protocols based on field conditions, and making any minor modifications as required. This is also when the main system-wide calibration checks are conducted, as well as limited performance testing to be able to assess that the system is operating per the manufacturer's recommendations and expectations prior to initiating the validation test runs. The manufacturer, in conjunction with the FTO, shall ensure that all monitors, indicators and alarms are functioning as designed.

4.3.3.1 Flow Meter Calibration

The system will have a 6-inch magnetic flow meter located between the pump and the influent chamber of the UV system installed per the manufacturer's recommendations.

The meter's calibration will be checked upon completion of installation. Primary calibration will be done by measuring draw down in the batch tank over time to imply the flow rate. Calibration will be conducted at flow settings covering the range of flows used for the system validation.

Flow meter calibration checks will be conducted once for every fifteen active days of field-testing or at least once during this Test Element.

The flow meter calibration protocol (Field Protocol – 1) can be found in Appendix C.

4.3.3.2 Lamp "Burn-In"

After system installation is completed, it is necessary to burn-in the UV lamps for a period of at least 100 hours before any performance testing. This is required because the UV output of the lamp will not reach steady state before the first 100 hours. Each system will start with new, un-burned in lamps.

The lamp burn-in certification protocol (Field Protocol – 2) can be found in Appendix C.

4.3.3.3 Headloss Measurements

After completion of the flow meter calibration check, headloss as a function of flow will be measured for the system using Field Protocol – 3, found in Appendix C.

4.3.3.4 Measurement of Power Consumption and Stability

Before the start of testing the electrical and intensity behavior of the system must be characterized. This will allow the determination of the power consumption per lamp and the overall power consumption of the system. The stability of the intensity will be monitored to determine how long the technician must wait before flow testing can begin.

The procedure for these measurements is in Field Protocol-4 Appendix C.

4.3.3.5 Shakedown Flows

Before the start of any verification test runs, the FTO, in conjunction with the vendor will ensure that the system is installed correctly (hydraulically and electrically) and that the FTO is fully trained in all aspects of system operation and monitoring. This will include demonstration of all electrical controls, procedures for installing lamps and quartz sleeves, and elementary trouble-shooting logic. ONDEO DEGREMONT Inc. will provide copies of their system Operations & Maintenance (O&M) manual to HydroQual for training and for troubleshooting reference.

The system will be pre-tested at five flows at both 55%T and 65%T nominal transmittances (54%T and 46%T actual respectively). This will be done with test batches prepared with a phage concentration of at least 1 x 10^6 pfu/mL.

These runs will be conducted following the same protocols used for the verification test runs (Field Protocols 5, 6 and 7). These results will be reviewed by ONDEO DEGREMONT Inc. as a performance check and indicator that the field installation and system operation is consistent with its design and performance expectations.

4.3.4 Hydraulic Testing

Hydraulic testing will be conducted by measuring the flow-field velocity in the channel. Velocity measurements will be taken in a 2 x 11 array with a Marsh McBirney electromagnetic flow meter. Three locations will be measured: (1) 11 inches ahead of the first lamp module; (2) midway between lamp modules #3 and #2; and, (3) 11 inches behind the last lamp module. Flow fields will be measured three times at each point for all five flow velocities. See Field Protocol – 8 in Appendix C.

4.3.5 Dose–Response Calibration

Key elements of the bioassay process are the selection and harvesting of a test organism, and the accurate calibration of its response to UV exposure.

4.3.5.1 Selection, Culturing and Harvesting of Test Organism

The test organism that will be used is F-specific RNA bacteriophage MS2. F-specific RNA bacteriophage are bacterial viruses which can infect a specific host strain with F- or sex-pili,

producing clear areas, or plaques, within a confluent lawn of grown host strain. The methodology for detection and enumeration of F-specific RNA bacteriophage is presented in (ISO 10705-1, 1995).

A 20 Liter stock of MS2 will be cultured and harvested by the methods outlined in ISO 10705-1 (1995) to meet the needs for the entire ONDEO DEGREMONT Inc. ETV. Bacteriophage stocks shall be kept separate and will be labeled with a sequential identifier number, and with notes describing the preparation will be retained. The coliphage culturing procedure can be found in Special Laboratory Protocol – 1 (Appendix D).

4.3.5.2 Collimated Beam Apparatus

The dose-response calibration will be conducted using HydroQual's collimated beam apparatus (Figure 4-3). The lamp housing is a horizontal tube, constructed of an opaque and non-reflective material. The lamp housing is ventilated continuously via a blower for ozone removal and for temperature control. The collimating tube, also constructed of an opaque non-reflective material, extends downward from the center of the lamp housing. The housing contains two conventional G64T5 low-pressure mercury discharge lamps, which emit almost all of their energy at 254 nm. The lamp temperature is monitored continuously via a digital thermometer with a thermocouple mounted on the lamp skin.

It is important that the intensity across the cross-sectional plane at the bottom of the collimating tube be relatively uniform. The irradiance across the surface plane of the sample dish will be mapped with a radially symmetric pattern containing 19 points. Ninety percent of the data points shall have a ratio of single value to the average between 0.9 and 1.1. This procedure (detailed as Special Laboratory Protocol – 2 in Appendix D) ensures minimal variation of intensity across the surface of the sample. This procedure will be repeated every 120 hours of lamp operation. The intensity of the lamp will be verified at the beginning, middle, and end of a dose-response series.

All bacteriological samples will be exposed in a petri-type dish, with straight sides and a flat bottom. The outer perimeter of the sample container will be always within the diameter of the collimator. The exposure will be corrected for 2.5% reflectance at the solution surface.

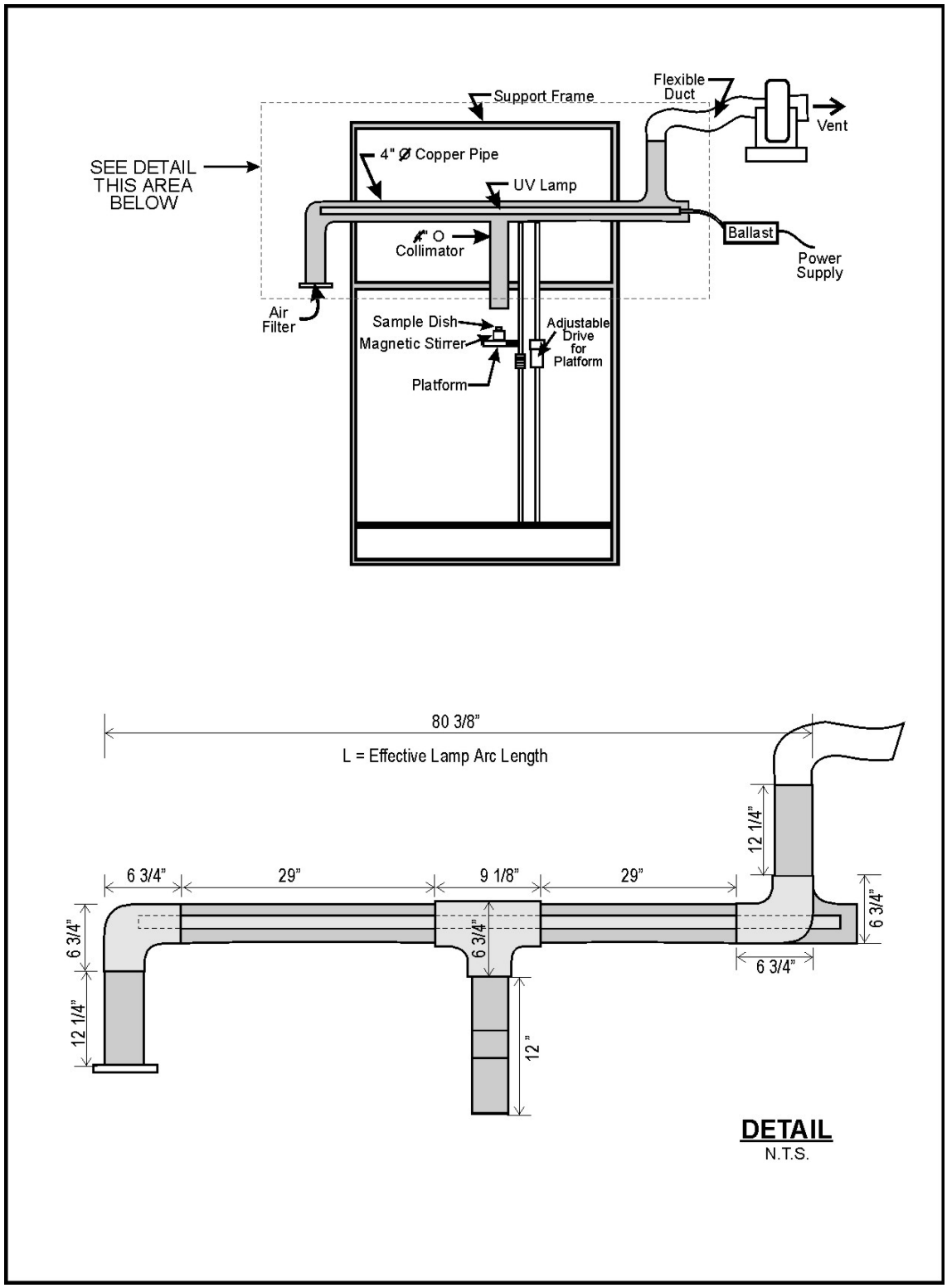

Figure 4-3. HydroQual Collimator Apparatus for Conducting Dose Response Tests

4.3.5.3 Intensity Calibration for the Collimated Beam and Sensor

The UV intensity emitted from the collimating tube will be measured with a radiometer (IL 1700 with an SED 240 detector from International Light, Newburyport, Massachusetts, or equivalent). International Light will calibrate the detectors within six weeks of startup and not less than once every four months thereafter using standards traceable to the National Institute of Standards and Technology. HydroQual will also alternate between two sets of UV sensors.

Additionally, the detectors may be checked experimentally, approximately every three weeks via an actinometry test, to assure consistency and accuracy of the dose imposed as part of the collimated beam dose-response test. Actinometry procedures reported by Bolton (1997) will be used. Actinometry will be used at the discretion of the FTO QA/AC Officer.

4.3.5.4 Collimator Verification

The dose delivery calculation is based on a depth-correction for the incident intensity, such that the dose is computed with the average intensity in the sample. This assumes that the depth is not too deep, there is adequate mixing, and all other facets of the collimator are correct.

Collimator verification involves a test of the intensity and depth corrections for transmittance during UV exposure under the collimated beam. At a minimum, three transmittances will be tested: at 55%, at 65% (nominal), and at the transmittance of the unadjusted potable water ~90%. This validation requires that the dose required to achieve a given response should be within 10% of the dose for unadjusted waters. The verification will also occur as a part of the dose-response on the seeded influent waters for water reuse applications.

The laboratory UV exposure will occur under conditions where the intensity at the bottom of the dish is equal to or greater than 50% of the surface intensity. At least three doses and two controls will be used.

4.3.5.5 Dose-Response Test Procedure

Five applied UV doses covering and bracketing the expected range of operating doses of the UV test unit (20 to 120 mJ/cm^2) will be used to develop the calibration curve for the phage that will be used for the challenge testing. A dose response assay will be performed on each batch of feed water, coffee, and MS-2 phage mixture within 24 hours of the challenge test (field seeded influent). Extrapolations will not be made beyond the minimum and maximum dose levels actually tested, thus higher doses may also be used.

The incident intensity will be corrected for a surface reflectance of 2.5% by multiplying the actual surface intensity by 0.975.

The dose-response runs will be conducted before the field-testing is initiated, and through the term of the field tests for a total of 5 runs. Each field run will be accompanied by a dose

response on the field seeded, transmittance adjusted influent waters. At least 80 percent of the dose-response data must fall in the area bound by:

$$-\log_{10}(N/N_0) = 0.044 \times [\text{UV dose, mJ/cm}^2] + 0.700 \quad (4\text{-}1)$$

$$-\log_{10}(N/N_0) = 0.036 \times [\text{UV dose, mJ/cm}^2] + 0.134 \quad (4\text{-}2)$$

Where:

N = Concentration of infective MS2 after UV exposure.

N_0 = Concentration of infective MS2 at dose zero.

The remaining dose points can lie in the region outside the area; however, all data points in the appropriate dose range shall be included in the regression analysis. The final regression line should also lie within the area bounded by the above equations in the UV dose range from 10 to 100 mJ/cm^2 and have a correlation coefficient of 0.9 or greater.

Samples will be plated in triplicate at two dilutions and will comply with the QA/QC criteria presented in Section 5.7.1.5. The procedure to be followed is presented as Special Lab Protocols – 1 and 3 in Appendix D.

4.3.6 Field Dose-Flow Assay

4.3.6.1 Test Batch Preparation

Batching will be used for preparing test water of consistent quality with respect to UV transmittance, dechlorination and bacteriophage seeding. The batch tank is equipped with a recirculation system to adequately and efficiently mix the tank contents. Once the batch is prepared, the test water can be delivered to the UV system under controlled conditions.

The transmittance of the test water will be adjusted by adding instant coffee. Coffee has been found to be very effective at reducing the UV transmittance at 253.7 nm and testing has shown that it does not have an effect on MS2 phage at the levels routinely used for adjustment of the transmittance.

The test water is from a potable source for nominal 65%T (56%T) runs, and as such the water needs to be dechlorinated before it is used in the assay. Dechlorination will be accomplished by adding sodium thiosulfate directly into the batching vessel. Sufficient sodium thiosulfate will be added above the calculated stoichiometric requirements. After mixing, the residual chlorine will be measured. The use of the batch water shall proceed only after it is confirmed that there is non-detectable residual chlorine (less than 0.05 mg/L).

For nominal 55%T (46%T) flows, granular filtered effluent will be used. Chlorine removal is not necessary.

The stock MS2 phage suspension will be added directly into the batching vessel in sufficient quantity to achieve a density between 10^6 and 10^7 pfu/mL. A typical HydroQual bacteriophage stock has a concentration of 10^{11-12} pfu/mL. This requires the addition of approximately 500 mL of stock to a full batch of water (~20,000 gallons).

With each new stock of bacteriophage, a test will be conducted to confirm that the bacteriophage are unaffected by the addition of thiosulfate and coffee at the test levels.

Protocols for batch preparation are presented as Field Protocol – 6 (in Appendix C).

4.3.6.2 Test Conditions

Test conditions that need to be defined are the condition of the quartz surfaces, UV transmittance of the test water, indicator organism densities, lamp output, temperature and flow rates.

4.3.6.2.1 Quartz Surface Condition

The objective of this verification is to assess the performance of the system with respect to dose delivery, when the quartz surfaces are clean. The test unit's quartz sleeves will be manually cleaned before each "batch run" or, at minimum, once each day before startup of the unit. This is done by lifting the modules from the channel, spraying/wiping the quartz with a cleaner (e.g., Lime-Away, citric acid), rinsing the surface with clean water and then replacing the modules in the channel. If water cannot be introduced before the sleeves dry, the sleeves will be dried by hand. (Field Protocol – 5, Appendix C).

4.3.6.2.2 UV Transmittance of the Test Water

The dose-flow assays for this reuse ETV will use simulated wastewaters with two different UV transmittances at 254nm. The nominal target transmittances will be 55% for the media filtered water, and 65% for the membrane-filtered water (simulated by dechlorinated potable water).

The ONDEO DEGREMONT Inc. Aquaray HO VLS disinfection system is designed with a fixed output lamp/power supply system. As such, the lamps cannot be turned down to simulate the specific test conditions. As an alternative, further lowering of the transmittance to reduce the average intensity field in the reactor will be used to simulate the specific test conditions. Three conditions are included in this calculation:

(1) The EOL (end-of-life) lamp intensity condition to be simulated is 90% of the intensity after the 100-hour burn in. See Section 3.1.2.

(2) The quartz-sleeve fouling factor will be the default value of 80% transmittance specified in the Generic Protocol.

(3) The relative intensity will be increased 7% to simulate the lamp output present at optimum temperature conditions; the tests will be conducted with approximately 15°C water. See Section 3.1.3.

The reduced target intensity is the product of all three corrections:

$$I_{reduced} = 0.90 \times 0.80 \times 1.07 \times I_{average} = 0.77 \times I_{average}$$

Thus, based on these three conditions, the transmittance should be reduced from the nominal value to reduce the average intensity to 77%. The target transmittances for these simulation conditions are calculated from a line source integration model (Janex et al., 2002), and the UVDIS point-source integration model. Both approaches give similar results but the former is shown here in detail.

Put simply, this calculation involves determining the intensity at each point in a cross-sectional plane of the lamp module (a finely spaced grid actually). The intensity at each point is calculated as a summation of the energy from each lamp and the attenuation of the energy with the Beer-Lambert law as the radiation moves through the UV absorbing water. The average intensity of the radiation field is then calculated for a range of transmittances resulting in a relationship as shown in Figure 4-4.

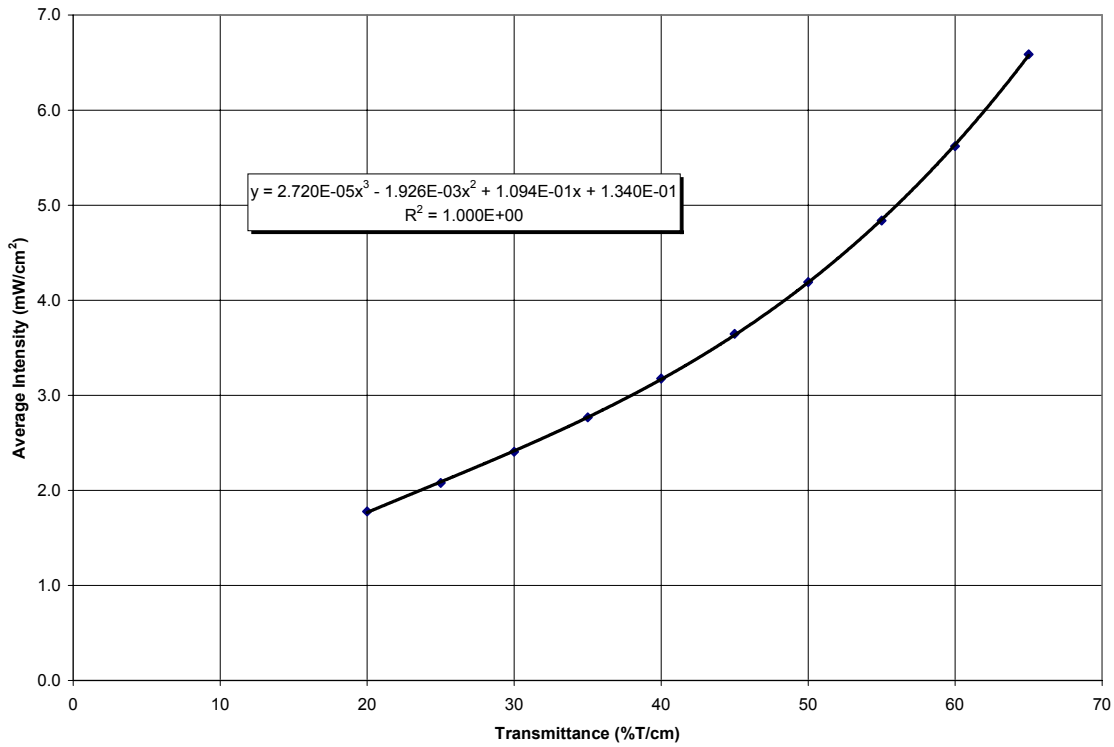

Figure 4-4. Average intensity in the Aquaray reactor as a function of transmittance.

These calculations were based on a model using low pressure lamps with an arc length of 146.7 cm, a lamp power @ 254 nm of 46.8 watts, quartz sleeves with a wall thickness of 0.125 cm and a radius of 1.219 cm, and a transmittance range of 20% to 65%. Geometrically, the ¼ scale 10-lamp unit was used, and the small volumes displaced by the baffles were removed. UVDIS modeling with the ¼ scale reactor gave %T results within 1% of the above model.

The above results from the line source integration model are fitted with a third order polynomial that quantifies the relationship:

$$I_{AVE} = 2.720\times10^{-5}(\%T)^3 - 1.926\times10^{-3}(\%T)^2 + 0.1094(\%T) + 0.134$$

The average intensity is calculated for the nominal %T (e.g., 65%) and then multiplied by the 0.77 intensity-reduction factor. Then a reduced %T is determined which achieves this reduced average intensity. The results are shown in Table 4-2.

Table 4-2. Transmittance Reduction Calculation Results.

Transmittance	I_{AVE}	x 0.77
(%T/cm)	(mW/cm^2)	
55.0	4.850	3.735
46.0	3.735	
65.0	6.577	5.065
56.4	5.065	

As a result of these calculations the testing will be performed at adjusted transmittances. For the 65%T nominal conditions, the actual transmittance will be 56%; for the 55%T nominal conditions the actual transmittance will be 46%.

The transmittance of the test water shall be adjusted as described in Field Protocol – 6. Transmittance shall be measured on-site and at the laboratory, using a UV spectrophotometer. Distilled water will be used as a reference and matched quartz cuvettes will be used to hold the samples and reference water.

4.3.6.2.3 MS2 Phage Densities

The density of the MS2 phage in the test water will be high enough to yield a measurable density after treatment at the highest applied dose. The target initial density will be between 10^6 to 10^7 pfu/mL. The minimum effluent density will be approximately 50 pfu/mL.

4.3.6.2.4 Lamp Output

The lamps installed in the pilot unit will be new and will have been burned in for a period of 100h before bioassay testing commences as per Field Protocol – 2, Appendix C. Because the ballast control does not allow lamp intensity turndown, the turndown will be simulated as discussed in Section 4.3.6.2.2.

During the shakedown testing, the lamp intensity will be monitored to determine the minimum warm up time to achieve a stable output. This warm-up time will then be used for the remainder of the bioassay flows.

During bioassay flow testing, the intensity on the built-in sensors will be monitored continuously with a datalogger or will be recorded manually at each flow test.

4.3.6.2.5 Temperature

Lamp output will vary with temperature in this system as described in Section 3.1.3. Although the Generic Protocol Specifies an acceptable water temperature range of 10°C to 30°C, testing will be conducted at temperatures close to 15°C. This represents a condition with lower

lamp output than is present at the optimum temperature range (20°C to 25°C), and the correction has been described in Section 4.3.6.2.2. The temperature of the test waters will be documented for each run.

4.3.6.2.6 Hydraulic Loading Rates

A minimum of five hydraulic loading rates shall be tested in quadruplicate. The hydraulic loading rate (HLR) is defined as the flow (Lpm) divided by the number of lamps. Alternatively, the HLR can be defined as the flow per Total Input Watts or nominal UV Watts in the system. In either case the flow is the primary variable. The flow rates to be tested represent the expected operating condition for the targeted application and bracket the peak design flow rate of the test unit.

Table 4-3. Flow Rates for Bioassay Test.

Flow Rate	Flow Rate
(MGD)	(gpm)
0.22	150
0.50	350
0.65	450
0.79	550
1.08	750

4.3.6.3 Test Procedures, Sampling, System Monitoring

4.3.6.3.1 Test Procedure: Standard Bioassay

The standard bioassay flows will be conducted with all three lamp units activated.

Each dose-flow assay shall be conducted using the same batch preparation procedure, thereby insuring similar test water characteristics with respect to organism density and UV transmittance. A minimum of four runs shall be conducted, each comprising five different doses. Influent and effluent samples will be collected in triplicate at each flow condition. Test flows will be conducted at the flow rates shown in Table 4-2. These flow rates may be adjusted after the startup/shakedown phase is completed after equipment installation (reference Section 4.3.3.5). An addendum to this VTP will be prepared if there are any significant changes with respect to the test flows.

After a sample is collected, it will be capped, placed in a cooler and the cooler lid closed to prevent any exposure to sunlight. Samples will be plated within 48 hours after collection as described in Special Laboratory Protocol – 1 (Appendix D). Samples will be plated in triplicate, at

two dilutions. Samples collected for the determination of percent transmittance samples shall be kept at 4 ºC and analyzed within 48 hours of collection.

Refer to Field Protocols 5, 6, and 7 in Appendix C.

4.3.6.3.2 Test Procedure: Lamp Module 3 Evaluation

In addition to the standard bioassay, the contribution of the downstream lamp unit (lamp module #1) will be evaluated. This will be done by performing another set of bioassay flows with only lamp units #2 and #3 activated. This will consist of the same five flow rates run in quadruplicate with the nominal 55%T (46%T actual) conditions.

Samples will be collected in the same fashion as the other bioassay flows via the influent and effluent sampling valves.

The UV dose delivered by lamp unit #3 can then be determined by subtraction of the two module doses from the three module doses.

4.3.6.3.3 Field and Analytical Schedule

Table 4-3 summarizes the test schedule for assays to be conducted under this verification. The schedule covers 15 in-field test days and basic test operational parameters. Table 4-4 presents a summary of the analytical schedule associated with the field effort.

4.3.6.3.4 System Monitoring

Several operating parameters may provide information about how a UV system is operating. These parameters include, lamp output, power consumption, ambient air temperature, and water temperature.

Lamp output will be measured with the built in sensors, and the IL-1700 with the SUD detector. The output of these systems will be recorded with a datalogger, or, if not available, will be recorded manually at the start of each flow test. Power usage will be recorded with a power datalogger, or, if not available, will be recorded manually at the start of each flow test.

Refer to Field Protocol – 4 in Appendix C.

Table 4-4. Testing Schedule and Relevant Operating Conditions

ONDEO DEGREMONT Inc. Reuse ETV

Test Day #	Batch No.	Nominal %T	Actual %T	Flow 1	Flow 2	Flow 3	Flow 4	Flow 5	Flow 6	Flow 7	Comments
1	1	65%	56%	150	350	450	550	750			Shakedown Flows
2	2	65%	56%	150	350a	450	550	750	350b		
3	3	65%	56%	150	350	450	550	750	150N(2)	750N(2)	
4	4	65%	56%	150	350	450	550a	750	550b		
5(4)	5	65%	56%	?	?	?	?	?	?		Reruns
6	6	55%	46%	150	350	450	550	750			Shakedown Flows
7	7	55%	46%	150	350	150M	350M	450M	150N(2)		
8	8	55%	46%	450	550	550Ma	750M	150M	550Mb		
9	9	55%	46%	750	150a	150b	350M	450M	550M		
10	10	55%	46%	350	450	750Ma	150M	350M	750Mb		
11	11	55%	46%	550a	750	550b	450M	550M	750M		
12	12	55%	46%	150	350	150M	350M	450M	750N(2)		
13	13	55%	46%	450a	550	750	450b	550M	750M		
14(4)	14	55%	46%	?	?	?	?	?	?		Reruns

(1) Flows designated "N" are no-dose control flows. All lamp units turned off.
(2) Flows designated "M" are lamp module evaluation samples and will be samples with lamp unit #1 turned off.
(3) Flows designated "a" or "b" are duplicate flow events.
(4) Flows designated "?" will be reruns if four previous flows (quadruplicates) do not meet QA/QC criteria.

Table 4-5. Analytical Schedule

Table 4-5 Analytical Schedule Dose Verifications at 55%, and 65% Nominal UV Transmittance ONDEO DEGREMONT Inc. Reuse ETV						
Sample Designation					**Required Analysis**	
Batch	**Flow**	**Nom. %T**	**Act. %T**	**Sample ID**	**Coliphage[1]**	**%T @ 256 nm**
1	1	65%	56%	150-I-a	X	X
1	1	65%	56%	150-I-b	X	X
1	1	65%	56%	150-I-c	X	X
1	1	65%	56%	150-E-a	X	-
1	1	65%	56%	150-E-b	X	-
1	1	65%	56%	150-E-c	X	-
1	2	65%	56%	350-I-a	X rep[3]	X
1	2	65%	56%	350-I-b	X	X
1	2	65%	56%	350-I-c	X	X
1	2	65%	56%	350-E-a	X	-
1	2	65%	56%	350-E-b	X	-
1	2	65%	56%	350-E-c	X	-
1	3	65%	56%	450-I-a	X	X
1	3	65%	56%	450-I-b	X	X
1	3	65%	56%	450-I-c	X	X
1	3	65%	56%	450-E-a	X	-
1	3	65%	56%	450-E-b	X	-
1	3	65%	56%	450-E-c	X rep[3]	-
1	4	65%	56%	550-I-a	X	X rep[3]
1	4	65%	56%	550-I-b	X	X
1	4	65%	56%	550-I-c	X	X
1	4	65%	56%	550-E-a	X	-
1	4	65%	56%	550-E-b	X	-
1	4	65%	56%	550-E-c	X	-
1	5	65%	56%	750-I-a	X	X
1	5	65%	56%	750-I-b	X	X

Table 4-5
Analytical Schedule
Dose Verifications at 55%, and 65% Nominal UV Transmittance
ONDEO DEGREMONT Inc. Reuse ETV

Sample Designation					Required Analysis	
Batch	**Flow**	**Nom. %T**	**Act. %T**	**Sample ID**	**Coliphage[1]**	**%T @ 256 nm**
1	5	65%	56%	750-I-c	X	X
1	5	65%	56%	750-E-a	X	-
1	5	65%	56%	750-E-b	X	-
1	5	65%	56%	750-E-c	X	-
1				Influent: D/R	5 doses	X rep[3]
				Total Analyses[3]	234	18
2	1	65%	56%	150-I-a	X	X
2	1	65%	56%	150-I-b	X	X
2	1	65%	56%	150-I-c	X	X
2	1	65%	56%	150-E-a	X	-
2	1	65%	56%	150-E-b	X	-
2	1	65%	56%	150-E-c	X	-
2	2	65%	56%	350a-I-a	X	X
2	2	65%	56%	350a-I-b	X	X
2	2	65%	56%	350a-I-c	X	X
2	2	65%	56%	350a-E-a	X	-
2	2	65%	56%	350a-E-b	X rep[3]	-
2	2	65%	56%	350a-E-c	X	-
2	3	65%	56%	450-I-a	X	X
2	3	65%	56%	450-I-b	X	X
2	3	65%	56%	450-I-c	X	X rep[3]
2	3	65%	56%	450-E-a	X	-
2	3	65%	56%	450-E-b	X	-
2	3	65%	56%	450-E-c	X	-
2	4	65%	56%	550-I-a	X	X
2	4	65%	56%	550-I-b	X	X

Table 4-5
Analytical Schedule
Dose Verifications at 55%, and 65% Nominal UV Transmittance
ONDEO DEGREMONT Inc. Reuse ETV

Sample Designation					Required Analysis	
Batch	**Flow**	**Nom. %T**	**Act. %T**	**Sample ID**	**Coliphage[1]**	**%T @ 256 nm**
2	4	65%	56%	550-I-c	X	X
2	4	65%	56%	550-E-a	X	-
2	4	65%	56%	550-E-b	X	-
2	4	65%	56%	550-E-c	X	-
2	5	65%	56%	750-I-a	X	X
2	5	65%	56%	750-I-b	X	X
2	5	65%	56%	750-I-c	X	X
2	5	65%	56%	750-E-a	X	-
2	5	65%	56%	750-E-b	X	-
2	5	55%	46%	750-E-c	X	-
2	6	65%	56%	350b-I-a	X	X
2	6	65%	56%	350b-I-b	X	X
2	6	65%	56%	350b-I-c	X	X
2	6	65%	56%	350b-E-a	X	-
2	6	65%	56%	350b-E-b	X rep[3]	-
2	6	65%	56%	350b-E-c	X	-
2				Influent: D/R	3 doses	X rep[3]
				Total Analyses[3]	258	21
3	1	65%	56%	150-I-a	X	X
3	1	65%	56%	150-I-b	X	X
3	1	65%	56%	150-I-c	X	X
3	1	65%	56%	150-E-a	X	-
3	1	65%	56%	150-E-b	X	-
3	1	65%	56%	150-E-c	X	-
3	2	65%	56%	350-I-a	X	X
3	2	65%	56%	350-I-b	X	X

Table 4-5
Analytical Schedule
Dose Verifications at 55%, and 65% Nominal UV Transmittance
ONDEO DEGREMONT Inc. Reuse ETV

Sample Designation					Required Analysis	
Batch	**Flow**	**Nom. %T**	**Act. %T**	**Sample ID**	**Coliphage[1]**	**%T @ 256 nm**
3	2	65%	56%	350-I-c	X	X
3	2	65%	56%	350-E-a	X	-
3	2	65%	56%	350-E-b	X	-
3	2	65%	56%	350-E-c	X	-
3	3	65%	56%	450-I-a	X	X
3	3	65%	56%	450-I-b	X rep[3]	X
3	3	65%	56%	450-I-c	X	X rep[3]
3	3	65%	56%	450-E-a	X	-
3	3	65%	56%	450-E-b	X	-
3	3	65%	56%	450-E-c	X	-
3	4	65%	56%	550-I-a	X	X
3	4	65%	56%	550-I-b	X	X
3	4	65%	56%	550-I-c	X	X
3	4	65%	56%	550-E-a	X	-
3	4	65%	56%	550-E-b	X rep[3]	-
3	4	65%	56%	550-E-c	X	-
3	5	65%	56%	750-I-a	X	X
3	5	65%	56%	750-I-b	X	X
3	5	65%	56%	750-I-c	X	X
3	5	65%	56%	750-E-a	X	-
3	5	65%	56%	750-E-b	X	-
3	5	65%	56%	750-E-c	X	-
3	6	65%	56%	150N-I-a	X	X
3	6	65%	56%	150N-I-b	X	X
3	6	65%	56%	150N-I-c	X	X
3	6	65%	56%	150N-E-a	X	-
3	6	65%	56%	150N-E-b	X	-

Table 4-5
Analytical Schedule
Dose Verifications at 55%, and 65% Nominal UV Transmittance
ONDEO DEGREMONT Inc. Reuse ETV

Sample Designation					Required Analysis	
Batch	**Flow**	**Nom. %T**	**Act. %T**	**Sample ID**	**Coliphage[1]**	**%T @ 256 nm**
3	6	65%	56%	150N-E-c	X	-
3	7	65%	56%	750N-I-a	X	X rep[3]
3	7	65%	56%	750N-I-b	X	X
3	7	65%	56%	750N-I-c	X	X
3	7	65%	56%	750N-E-a	X	-
3	7	65%	56%	750N-E-b	X	-
3	7	65%	56%	750N-E-c	X	-
3				Influent: D/R	5 doses	X
				Total Analyses[3]	306	24
4	1	65%	56%	150-I-a	X	X
4	1	65%	56%	150-I-b	X	X
4	1	65%	56%	150-I-c	X	X
4	1	65%	56%	150-E-a	X rep[3]	-
4	1	65%	56%	150-E-b	X	-
4	1	65%	56%	150-E-c	X	-
4	2	65%	56%	350-I-a	X	X
4	2	65%	56%	350-I-b	X	X
4	2	65%	56%	350-I-c	X	X
4	2	65%	56%	350-E-a	X	-
4	2	65%	56%	350-E-b	X	-
4	2	65%	56%	350-E-c	X	-
4	3	65%	56%	450-I-a	X	X
4	3	65%	56%	450-I-b	X	X
4	3	65%	56%	450-I-c	X	X rep[3]
4	3	65%	56%	450-E-a	X	-
4	3	65%	56%	450-E-b	X	-

Table 4-5
Analytical Schedule
Dose Verifications at 55%, and 65% Nominal UV Transmittance
ONDEO DEGREMONT Inc. Reuse ETV

Sample Designation					Required Analysis	
Batch	**Flow**	**Nom. %T**	**Act. %T**	**Sample ID**	**Coliphage[1]**	**%T @ 256 nm**
4	3	65%	56%	450-E-c	X	-
4	4	65%	56%	550a-I-a	X	X
4	4	65%	56%	550a-I-b	X	X
4	4	65%	56%	550a-I-c	X	X
4	4	65%	56%	550a-E-a	X	-
4	4	65%	56%	550a-E-b	X	-
4	4	65%	56%	550a-E-c	X rep[3]	-
4	5	65%	56%	750-I-a	X	X
4	5	65%	56%	750-I-b	X	X
4	5	65%	56%	750-I-c	X	X
4	5	65%	56%	750-E-a	X	-
4	5	65%	56%	750-E-b	X	-
4	5	65%	56%	750-E-c	X	-
4	6	65%	56%	550b-I-a	X	X
4	6	65%	56%	550b-I-b	X	X
4	6	65%	56%	550b-I-c	X	X
4	6	65%	56%	550b-E-a	X	-
4	6	65%	56%	550b-E-b	X	-
4	6	65%	56%	550b-E-c	X	-
4				Influent: D/R	3 doses	X rep[3]
				Total Analyses[3]	258	21
6	1	55%	46%	150-I-a	X rep[3]	X
6	1	55%	46%	150-I-b	X	X
6	1	55%	46%	150-I-c	X	X
6	1	55%	46%	150-E-a	X	-
6	1	55%	46%	150-E-b	X	-

Table 4-5
Analytical Schedule
Dose Verifications at 55%, and 65% Nominal UV Transmittance
ONDEO DEGREMONT Inc. Reuse ETV

Sample Designation					Required Analysis	
Batch	**Flow**	**Nom. %T**	**Act. %T**	**Sample ID**	**Coliphage[1]**	**%T @ 256 nm**
6	1	55%	46%	150-E-c	X	-
6	2	55%	46%	350-I-a	X	X
6	2	55%	46%	350-I-b	X	X
6	2	55%	46%	350-I-c	X	X
6	2	55%	46%	350-E-a	X	-
6	2	55%	46%	350-E-b	X	-
6	2	55%	46%	350-E-c	X	-
6	3	55%	46%	450-I-a	X	X
6	3	55%	46%	450-I-b	X	X
6	3	55%	46%	450-I-c	X	X rep[3]
6	3	55%	46%	450-E-a	X	-
6	3	55%	46%	450-E-b	X	-
6	3	55%	46%	450-E-c	X	-
6	4	55%	46%	550-I-a	X	X
6	4	55%	46%	550-I-b	X	X
6	4	55%	46%	550-I-c	X	X
6	4	55%	46%	550-E-a	X	-
6	4	55%	46%	550-E-b	X	-
6	4	55%	46%	550-E-c	X	-
6	5	55%	46%	750-I-a	X	X
6	5	55%	46%	750-I-b	X	X
6	5	55%	46%	750-I-c	X	X
6	5	55%	46%	750-E-a	X rep[3]	-
6	5	55%	46%	750-E-b	X	-
6	5	55%	46%	750-E-c	X	-
6				Influent: D/R	5 doses	X rep[3]
				Total Analyses[3]	234	18

Table 4-5
Analytical Schedule
Dose Verifications at 55%, and 65% Nominal UV Transmittance
ONDEO DEGREMONT Inc. Reuse ETV

Sample Designation					Required Analysis	
Batch	**Flow**	**Nom. %T**	**Act. %T**	**Sample ID**	**Coliphage[1]**	**%T @ 256 nm**
7	1	55%	46%	150-I-a	X	X
7	1	55%	46%	150-I-b	X	X
7	1	55%	46%	150-I-c	X	X
7	1	55%	46%	150-E-a	X	-
7	1	55%	46%	150-E-b	X	-
7	1	55%	46%	150-E-c	X	-
7	2	55%	46%	350-I-a	X	X
7	2	55%	46%	350-I-b	X	X
7	2	55%	46%	350-I-c	X rep[3]	X
7	2	55%	46%	350-E-a	X	-
7	2	55%	46%	350-E-b	X	-
7	2	55%	46%	350-E-c	X	-
7	3	55%	46%	150M-I-a	X	X
7	3	55%	46%	150M-I-b	X	X
7	3	55%	46%	150M-I-c	X	X rep[3]
7	3	55%	46%	150M-E-a	X	-
7	3	55%	46%	150M-E-b	X	-
7	3	55%	46%	150M-E-c	X	-
7	4	55%	46%	350M-I-a	X	X
7	4	55%	46%	350M-I-b	X	X
7	4	55%	46%	350M-I-c	X	X
7	4	55%	46%	350M-E-a	X	-
7	4	55%	46%	350M-E-b	X rep[3]	-
7	4	55%	46%	350M-E-c	X	-
7	5	55%	46%	450M-I-a	X	X
7	5	55%	46%	450M-I-b	X	X

Table 4-5
Analytical Schedule
Dose Verifications at 55%, and 65% Nominal UV Transmittance
ONDEO DEGREMONT Inc. Reuse ETV

Sample Designation					Required Analysis	
Batch	**Flow**	**Nom. %T**	**Act. %T**	**Sample ID**	**Coliphage[1]**	**%T @ 256 nm**
7	5	55%	46%	450M-I-c	X	X
7	5	55%	46%	450M-E-a	X	-
7	5	55%	46%	450M-E-b	X	-
7	5	55%	46%	450M-E-c	X	-
7	6	55%	46%	150N-I-a	X	X
7	6	55%	46%	150N-I-b	X	X
7	6	55%	46%	150N-I-c	X	X
7	6	55%	46%	150N-E-a	X	-
7	6	55%	46%	150N-E-b		-
7	6	55%	46%	150N-E-c	X	-
7				Influent: D/R	3 doses	X rep[3]
				Total Analyses[3]	258	21
8	1	55%	46%	450-I-a	X	X
8	1	55%	46%	450-I-b	X	X
8	1	55%	46%	450-I-c	X rep[3]	X
8	1	55%	46%	450-E-a	X	-
8	1	55%	46%	450-E-b	X	-
8	1	55%	46%	450-E-c	X	-
8	2	55%	46%	550-I-a	X	X
8	2	55%	46%	550-I-b	X	X
8	2	55%	46%	550-I-c	X	X
8	2	55%	46%	550-E-a	X	-
8	2	55%	46%	550-E-b	X	-
8	2	55%	46%	550-E-c	X	-
8	3	55%	46%	550Ma-I-a	X	X
8	3	55%	46%	550Ma-I-b	X	X

Table 4-5
Analytical Schedule
Dose Verifications at 55%, and 65% Nominal UV Transmittance
ONDEO DEGREMONT Inc. Reuse ETV

Sample Designation					Required Analysis	
Batch	**Flow**	**Nom. %T**	**Act. %T**	**Sample ID**	**Coliphage[1]**	**%T @ 256 nm**
8	3	55%	46%	550Ma-I-c	X	X rep[3]
8	3	55%	46%	550Ma-E-a	X	-
8	3	55%	46%	550Ma-E-b	X	-
8	3	55%	46%	550Ma-E-c	X	-
8	4	55%	46%	750M-I-a	X	X
8	4	55%	46%	750M-I-b	X	X
8	4	55%	46%	750M-I-c	X	X
8	4	55%	46%	750M-E-a	X	-
8	4	55%	46%	750M-E-b	X rep[3]	-
8	4	55%	46%	750M-E-c	X	-
8	5	55%	46%	150M-I-a	X	X
8	5	55%	46%	150M-I-b	X	
8	5	55%	46%	150M-I-c	X	X
8	5	55%	46%	150M-E-a	X	-
8	5	55%	46%	150M-E-b	X	-
8	5	55%	46%	150M-E-c	X	-
8	6	55%	46%	550Mb-I-a	X	X
8	6	55%	46%	550Mb-I-b	X	X
8	6	55%	46%	550Mb-I-c	X	X
8	6	55%	46%	550Mb-E-a	X	-
8	6	55%	46%	550Mb-E-b	X	-
8	6	55%	46%	550Mb-E-c	X	-
8				Influent: D/R	5 doses	X rep[3]
				Total Analyses[3]	270	21
9	1	55%	46%	750-I-a	X	X
9	1	55%	46%	750-I-b	X	X

Table 4-5
Analytical Schedule
Dose Verifications at 55%, and 65% Nominal UV Transmittance
ONDEO DEGREMONT Inc. Reuse ETV

Sample Designation					Required Analysis	
Batch	**Flow**	**Nom. %T**	**Act. %T**	**Sample ID**	**Coliphage[1]**	**%T @ 256 nm**
9	1	55%	46%	750-I-c	X	X
9	1	55%	46%	750-E-a	X	-
9	1	55%	46%	750-E-b	X	-
9	1	55%	46%	750-E-c	X	-
9	2	55%	46%	150a-I-a	X	X
9	2	55%	46%	150a-I-b	X	X
9	2	55%	46%	150a-I-c	X	X
9	2	55%	46%	150a-E-a	X	-
9	2	55%	46%	150a-E-b	X	-
9	2	55%	46%	150a-E-c	X	-
9	3	55%	46%	150b-I-a	X	X
9	3	55%	46%	150b-I-b	X	X
9	3	55%	46%	150b-I-c	X	X rep[3]
9	3	55%	46%	150b-E-a	X	-
9	3	55%	46%	150b-E-b	X	-
9	3	55%	46%	150b-E-c	X	-
9	4	55%	46%	350M-I-a	X rep[3]	X
9	4	55%	46%	350M-I-b	X	X
9	4	55%	46%	350M-I-c	X	X
9	4	55%	46%	350M-E-a	X	-
9	4	55%	46%	350M-E-b	X	-
9	4	55%	46%	350M-E-c	X	-
9	5	55%	46%	450M-I-a	X	X
9	5	55%	46%	450M-I-b	X	X
9	5	55%	46%	450M-I-c	X	X
9	5	55%	46%	450M-E-a	X	-
9	5	55%	46%	450M-E-b	X	-

Table 4-5
Analytical Schedule
Dose Verifications at 55%, and 65% Nominal UV Transmittance
ONDEO DEGREMONT Inc. Reuse ETV

Sample Designation					Required Analysis	
Batch	**Flow**	**Nom. %T**	**Act. %T**	**Sample ID**	**Coliphage[1]**	**%T @ 256 nm**
9	5	55%	46%	450M-E-c	X	-
9	6	55%	46%	550M-I-a	X	X
9	6	55%	46%	550M-I-b	X	X
9	6	55%	46%	550M-I-c	X	X
9	6	55%	46%	550M-E-a	X	-
9	6	55%	46%	550M-E-b	X rep[3]	-
9	6	55%	46%	550M-E-c	X	-
9				Influent: D/R	3 doses	X rep[3]
				Total Analyses[3]	258	21
10	1	55%	46%	350-I-a	X	X
10	1	55%	46%	350-I-b	X	X
10	1	55%	46%	350-I-c	X rep[3]	X
10	1	55%	46%	350-E-a	X	-
10	1	55%	46%	350-E-b	X	-
10	1	55%	46%	350-E-c	X	-
10	2	55%	46%	450-I-a	X	X
10	2	55%	46%	450-I-b	X	X
10	2	55%	46%	450-I-c	X	X
10	2	55%	46%	450-E-a	X	-
10	2	55%	46%	450-E-b	X	-
10	2	55%	46%	450-E-c	X	-
10	3	55%	46%	750Ma-I-a	X	X
10	3	55%	46%	750Ma-I-b	X	X
10	3	55%	46%	750Ma-I-c	X	X
10	3	55%	46%	750Ma-E-a	X	-
10	3	55%	46%	750Ma-E-b	X	-

Table 4-5
Analytical Schedule
Dose Verifications at 55%, and 65% Nominal UV Transmittance
ONDEO DEGREMONT Inc. Reuse ETV

Sample Designation					Required Analysis	
Batch	**Flow**	**Nom. %T**	**Act. %T**	**Sample ID**	**Coliphage[1]**	**%T @ 256 nm**
10	3	55%	46%	750Ma-E-c	X	-
10	4	55%	46%	150M-I-a	X	X
10	4	55%	46%	150M-I-b	X	X
10	4	55%	46%	150M-I-c	X	X
10	4	55%	46%	150M-E-a	X	-
10	4	55%	46%	150M-E-b	X rep[3]	-
10	4	55%	46%	150M-E-c	X	-
10	5	55%	46%	350M-I-a	X	X
10	5	55%	46%	350M-I-b	X	X
10	5	55%	46%	350M-I-c	X	X
10	5	55%	46%	350M-E-a	X	-
10	5	55%	46%	350M-E-b	X	-
10	5	55%	46%	350M-E-c	X	-
10	6	55%	46%	750Mb-I-a	X	X rep[3]
10	6	55%	46%	750Mb-I-b	X	X
10	6	55%	46%	750Mb-I-c	X	X
10	6	55%	46%	750Mb-E-a	X	-
10	6	55%	46%	750Mb-E-b	X	-
10	6	55%	46%	750Mb-E-c	X	-
10				Influent: D/R	3 doses	X rep[3]
				Total Analyses[3]	258	21
11	1	55%	46%	550a-I-a	X	X
11	1	55%	46%	550a-I-b	X	X
11	1	55%	46%	550a-I-c	X rep[3]	X
11	1	55%	46%	550a-E-a	X	-
11	1	55%	46%	550a-E-b	X	-

Table 4-5
Analytical Schedule
Dose Verifications at 55%, and 65% Nominal UV Transmittance
ONDEO DEGREMONT Inc. Reuse ETV

Sample Designation					Required Analysis	
Batch	**Flow**	**Nom. %T**	**Act. %T**	**Sample ID**	**Coliphage[1]**	**%T @ 256 nm**
11	1	55%	46%	550a-E-c	X	-
11	2	55%	46%	750-I-a	X	X
11	2	55%	46%	750-I-b	X	X
11	2	55%	46%	750-I-c	X	X
11	2	55%	46%	750-E-a	X	-
11	2	55%	46%	750-E-b	X	-
11	2	55%	46%	750-E-c	X	-
11	3	55%	46%	550b-I-a	X	X
11	3	55%	46%	550b-I-b	X	X
11	3	55%	46%	550b-I-c	X	X
11	3	55%	46%	550b-E-a	X	-
11	3	55%	46%	550b-E-b	X	-
11	3	55%	46%	550b-E-c	X	-
11	4	55%	46%	450M-I-a	X	X
11	4	55%	46%	450M-I-b	X	X
11	4	55%	46%	450M-I-c	X	X
11	4	55%	46%	450M-E-a	X	-
11	4	55%	46%	450M-E-b	X rep[3]	-
11	4	55%	46%	450M-E-c	X	-
11	5	55%	46%	550M-I-a	X	X rep[3]
11	5	55%	46%	550M-I-b	X	X
11	5	55%	46%	550M-I-c	X	X
11	5	55%	46%	550M-E-a	X	-
11	5	55%	46%	550M-E-b	X	-
11	5	55%	46%	550M-E-c	X	-
11	6	55%	46%	750M-I-a	X	X rep[3]
11	6	55%	46%	750M-I-b	X	X

Table 4-5
Analytical Schedule
Dose Verifications at 55%, and 65% Nominal UV Transmittance
ONDEO DEGREMONT Inc. Reuse ETV

Sample Designation					Required Analysis	
Batch	**Flow**	**Nom. %T**	**Act. %T**	**Sample ID**	**Coliphage[1]**	**%T @ 256 nm**
11	6	55%	46%	750M-I-c	X	X
11	6	55%	46%	750M-E-a	X	-
11	6	55%	46%	750M-E-b	X	-
11	6	55%	46%	750M-E-c	X	-
11				Influent: D/R	5 doses	X rep[3]
				Total Analyses[3]	270	21
12	1	55%	46%	150-I-a	X	X
12	1	55%	46%	150-I-b	X	X
12	1	55%	46%	150-I-c	X	X
12	1	55%	46%	150-E-a	X	-
12	1	55%	46%	150-E-b	X	-
12	1	55%	46%	150-E-c	X	-
12	2	55%	46%	350-I-a	X	X
12	2	55%	46%	350-I-b	X	X
12	2	55%	46%	350-I-c	X	X
12	2	55%	46%	350-E-a	X	-
12	2	55%	46%	350-E-b	X	-
12	2	55%	46%	350-E-c	X	-
12	3	55%	46%	150M-I-a	X rep[3]	X
12	3	55%	46%	150M-I-b	X	X
12	3	55%	46%	150M-I-c	X	X
12	3	55%	46%	150M-E-a	X	-
12	3	55%	46%	150M-E-b	X	-
12	3	55%	46%	150M-E-c	X	-
12	4	55%	46%	350M-I-a	X	X
12	4	55%	46%	350M-I-b	X	X

Table 4-5
Analytical Schedule
Dose Verifications at 55%, and 65% Nominal UV Transmittance
ONDEO DEGREMONT Inc. Reuse ETV

Sample Designation					Required Analysis	
Batch	**Flow**	**Nom. %T**	**Act. %T**	**Sample ID**	**Coliphage[1]**	**%T @ 256 nm**
12	4	55%	46%	350M-I-c	X	X
12	4	55%	46%	350M-E-a	X	-
12	4	55%	46%	350M-E-b	X rep[3]	-
12	4	55%	46%	350M-E-c	X	-
12	5	55%	46%	450M-I-a	X	X
12	5	55%	46%	450M-I-b	X	X
12	5	55%	46%	450M-I-c	X	X
12	5	55%	46%	450M-E-a	X	-
12	5	55%	46%	450M-E-b	X	-
12	5	55%	46%	450M-E-c	X	-
12	6	55%	46%	750N-I-a	X	X rep[3]
12	6	55%	46%	750N-I-b	X	X
12	6	55%	46%	750N-I-c	X	X
12	6	55%	46%	750N-E-a	X	-
12	6	55%	46%	750N-E-b	X	-
12	6	55%	46%	750N-E-c	X	-
12				Influent: D/R	3 doses	X rep[3]
				Total Analyses[3]	258	21
13	1	55%	46%	450a-I-a	X	X
13	1	55%	46%	450a-I-b	X	X
13	1	55%	46%	450a-I-c	X rep[3]	X
13	1	55%	46%	450a-E-a	X	-
13	1	55%	46%	450a-E-b	X	-
13	1	55%	46%	450a-E-c	X	-
13	2	55%	46%	550-I-a	X	X
13	2	55%	46%	550-I-b	X	X

Table 4-5
Analytical Schedule
Dose Verifications at 55%, and 65% Nominal UV Transmittance
ONDEO DEGREMONT Inc. Reuse ETV

Sample Designation					Required Analysis	
Batch	**Flow**	**Nom. %T**	**Act. %T**	**Sample ID**	**Coliphage[1]**	**%T @ 256 nm**
13	2	55%	46%	550-I-c	X	X
13	2	55%	46%	550-E-a	X	-
13	2	55%	46%	550-E-b	X	-
13	2	55%	46%	550-E-c	X	-
13	3	55%	46%	750-I-a	X	X
13	3	55%	46%	750-I-b	X	X
13	3	55%	46%	750-I-c	X	X
13	3	55%	46%	750-E-a	X	-
13	3	55%	46%	750-E-b	X	-
13	3	55%	46%	750-E-c	X	-
13	4	55%	46%	450b-I-a	X	X
13	4	55%	46%	450b-I-b	X	X
13	4	55%	46%	450b-I-c	X	X
13	4	55%	46%	450b-E-a	X	-
13	4	55%	46%	450b-E-b	X rep[3]	-
13	4	55%	46%	450b-E-c	X	-
13	5	55%	46%	550M-I-a	X	X rep[3]
13	5	55%	46%	550M-I-b	X	X
13	5	55%	46%	550M-I-c	X	X
13	5	55%	46%	550M-E-a	X	-
13	5	55%	46%	550M-E-b	X	-
13	5	55%	46%	550M-E-c	X	-
13	6	55%	46%	750M-I-a	X	X rep[3]
13	6	55%	46%	750M-I-b	X	X
13	6	55%	46%	750M-I-c	X	X
13	6	55%	46%	750M-E-a	X	-
13	6	55%	46%	750M-E-b	X	-

Table 4-5
Analytical Schedule
Dose Verifications at 55%, and 65% Nominal UV Transmittance
ONDEO DEGREMONT Inc. Reuse ETV

Sample Designation					Required Analysis	
Batch	**Flow**	**Nom. %T**	**Act. %T**	**Sample ID**	**Coliphage(1)**	**%T @ 256 nm**
13	6	55%	46%	750M-E-c	X	-
13				Influent: D/R	3 doses	X rep(3)
				Total Analyses(3)	270	21

Two dilutions on each sample will be placed in triplicate ∴ 6 individual analyses for each sample ID.
Replicate – Sample will split and replicate analyses performed for each aliquot.
Does not include blanks or other control samples.

4.3.7 Data Compilation and Analysis

All data generated from the ETV dose-delivery verification will be compiled, analyzed and presented in the Verification Report. These data specifically address the components related to dose-response calibration, hydraulic characteristic and the dose-flow evaluation on the test unit.

4.3.7.1 Dose-Response Data Analysis

The theoretical UV disinfection model follows first order kinetics according to the following equation:

$$N = N_o e^{KIt}$$

Where:

N = the organism density remaining after exposure to UV, pfu/mL
N_0 = the initial organism density, pfu/mL
K = the inactivation rate constant, cm^2/W-s
I = the intensity of UV radiation, mW/cm^2
t = the exposure time, seconds

The product (It) is the applied UV dose. The above equation can be expressed as a linear relationship by graphing the logarithm of N/N_o as a function of the applied UV dose. The resulting slope of a linear regression analysis is equal to the inactivation rate constant, K.

The data generated by a dose-response analysis are N, N_o and the applied UV doses. These data are analyzed using the above equation to yield a log survival dose-response curve for the organism.

Under ideal conditions, the data from a dose-response analysis should be expected to intercept the origin, and should be linear throughout the full dose range. This is generally not the case. The observed data do not yield a y-intercept at zero, and there is evidence of tailing at the higher dose levels. The deviation of the observed data from the theoretical model results from the non-ideal conditions under which the tests are performed. For the purposes of developing a dose-response curve, it is more appropriate to apply a model that better represents the observed data. Figure 4-5 presents a non-linear regression of the example dose-response data.

For each stock culture harvested for this ETV, the controls and exposed residual phage, transmittance (absorbance), and exposure time data shall be compiled and tabulated, and the resultant dose and log survival ratio (log N/N_0) computed and tabulated. The log survival ratio shall be plotted against the dose, and a non-linear correlation expression developed for each relevant

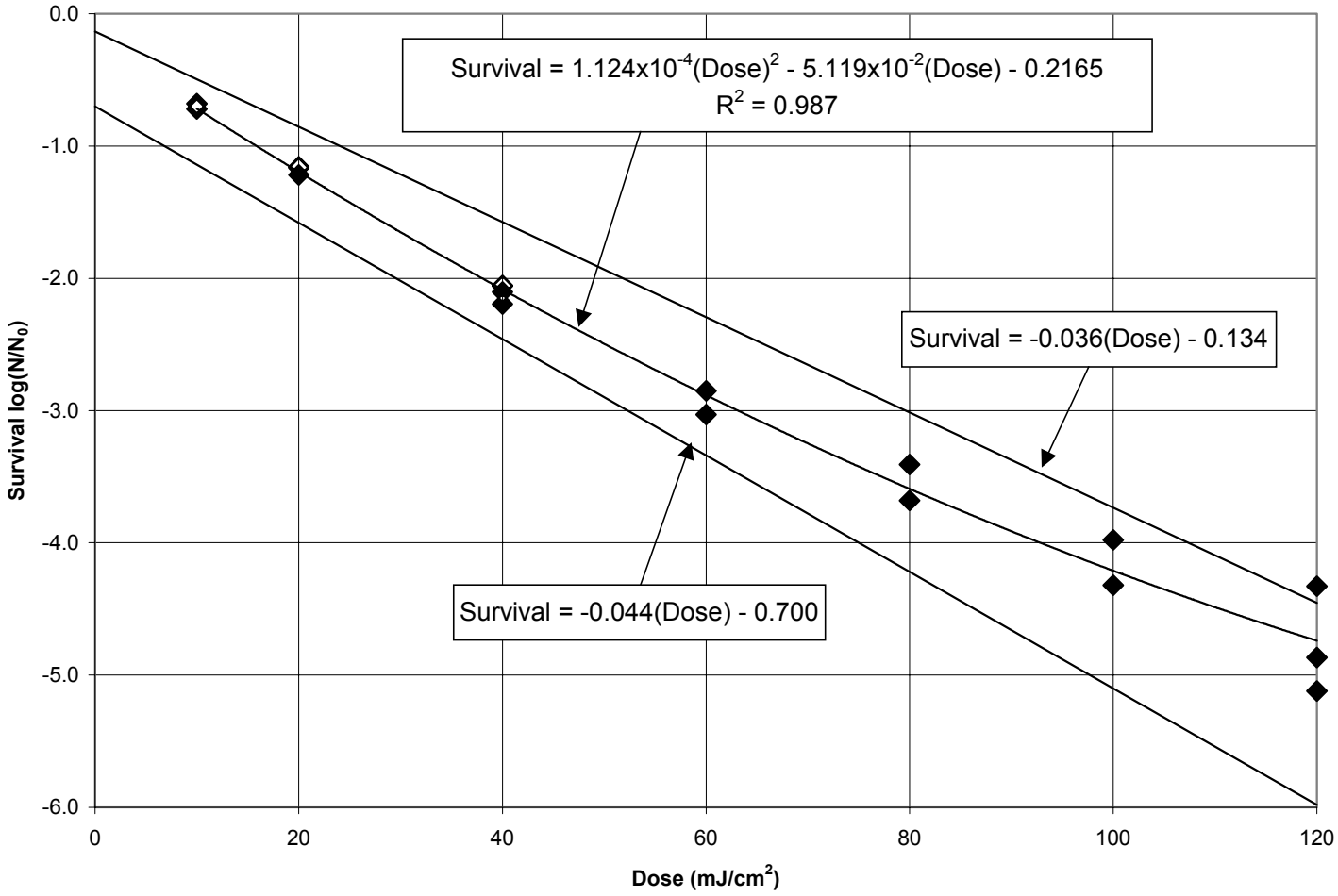

Figure 4-5. Example MS2 Dose-Response Correlation

stock as described above. The data shall adhere to the QA/QC criteria outlined in Section 4.3.5.5. If it falls outside the limits of the composite data, the Project QA/QC officer shall decide what corrective action or actions should be undertaken. Such actions may include the preparation of a new stock, repeating the dose-response tests, and/or acceptance of the stock after verifying its dose-response by the repeated tests.

4.3.7.2 Hydraulic Characterization

Hydraulic characterization of the test unit involves measuring detailed flow-field arrays for all flow conditions. The flow fields will be measured in triplicate and the average of the triplicate values will be taken to represent the velocity at each point.

The velocity at each point will be compared to the theoretical flow velocity of the water through a rectangular channel.

Headloss and velocity data will be presented as tabular summaries.

4.3.7.3 Dose-Flow Relationships

The influent and effluent phage data from each test unit evaluation will be tabulated, along with the associated flow and transmittance data. The log survival ratio, or response, will be use to determine the delivered dose, by comparing it to the dose-response relationship developed by the collimated beam method. This equivalent dose is then computed and plotted against the flow rate for each of the transmittances tested. A non-linear regression analysis shall be conducted to develop a dose-flow relationship. This relates the dose as an inverse function of flow.

The flow shall be expressed as a hydraulic loading as follows:

1. Flow per lamp (gpm/Lamp)
2. Flow per Total Watt Input
3. Delivered dose per bank as a function of full-scale flow.

Item 3 will, in the case of the Aquaray 40 HO VLS system, provide the fundamental engineering relationships to apply this disinfection technology. Figure 4-5 presents an example of a dose-hydraulic loading relationship (expressed as gpm/Lamp).

Other relevant data collected as part of the test program shall be compiled and presented, including:

- Intensity readings at the different flow settings and calibration steps
- Temperatures recorded for ambient air and water, and relevant system temperatures
- Other Measurements and certifications relevant to the specific ETV, e.g., flow meter calibration checks, collimator verification, sensor calibration checks, head loss, etc.

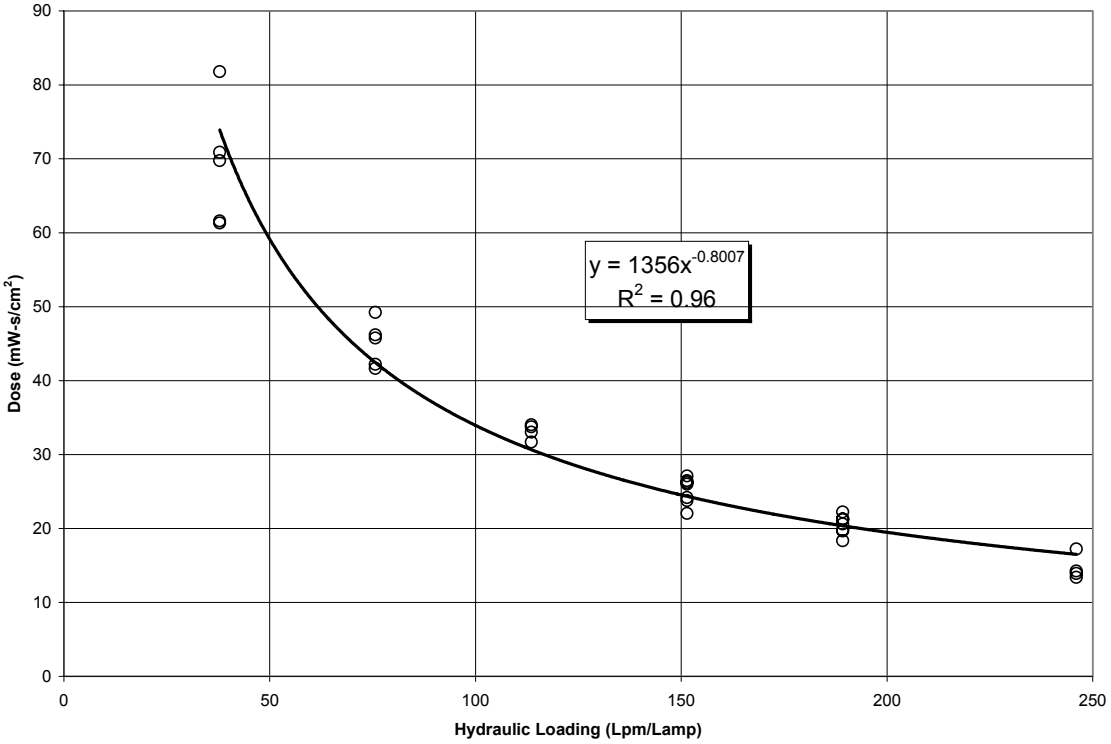

Figure 4-6. Example Relationship of Dose and Hydraulic Loading.

SECTION 5

QUALITY ASSURANCE PROJECT PLAN

This Quality Assurance Project Plan (QAPP) has been prepared to support the USEPA Environmental Technology Verifications being undertaken by ONDEO DEGREMONT Inc. under the Source Water Protection Technology UV Disinfection Pilot.

5.1 PROJECT DESCRIPTION, AND OBJECTIVES

5.1.1 Purpose of Study

The Environmental Technology Verification (ETV) program was created to accelerate the development and commercialization of environmental technologies through third party verification and reporting of performance. The goal of the ETV program is to verify performance characteristics of commercial-ready environmental technologies through the evaluation of objective and quality assured data so that potential buyers and regulators are provided with an independent and credible assessment of the technology that they are buying or permitting.

Disinfection for secondary effluent and reuse applications has been identified as one of the technology categories to be verified under the EPA/NSF ETV Source Water Protection Technologies Pilot.

This Verification Test Plan (VTP) applies to ultraviolet disinfection technologies that meet the general criteria set forth in the "Generic Verification Protocol for Secondary Effluent and Water Reuse Disinfection Applications," (HydroQual, Inc., September 2002). Details of this VTP focus on the selected Field Test Organization (FTO) and the generic verification protocols are modified to reflect a specific disinfection system provided by an independent vendor. Guidance is provided on the conduct of the testing, data reduction and analysis, and reporting required to validate the particular technology.

5.1.2 ONDEO DEGREMONT Inc. Technology

The ONDEO DEGREMONT Inc. UV system represents newer low-pressure lamp UV systems that have modified the design for increased germicidal output. These types of lamps take advantage of the high power conversion efficiency of the low-pressure lamps, while getting higher outputs. The output UV of the ONDEO DEGREMONT Inc. lamp is nominally 1.95 times greater in UV output than a conventional low-pressure lamp. It is configured in a conventional open-channel design, with the lamps oriented vertically and perpendicular to the direction of flow.

For this testing program a ¼ scale pilot unit will be used. A test channel will contain three 10-lamp modules in series. The lamps, sleeves, array configuration, and flow velocities to be employed are identical to those in the full-scale unit.

5.1.3 Facility and Pilot-Plant Description

The designated host site is the Parsippany Troy-Hills Wastewater Treatment Plant located in Parsippany, New Jersey. All site preparations will be coordinated between HydroQual's project manager and the PTRH's designated project liaison.

The plant is a conventional activated sludge plant with final sand filtration prior to dissipation.

The verification testing will take place at a single location within the plant allowing access to primary effluent, filtered secondary effluent, and potable water as needed.

5.1.4 Project Objectives

The overall objective of this ETV is to validate disinfection performance of the ONDEO DEGREMONT Inc. Aquaray 40 HO VLS UV System for water reuse applications. The nominal transmittances of the specific application waters will be adjusted to simulate sleeves that are fouled to 80% transmittance, lamp intensities that are reduced to 90%, and lamp intensity adjusted for optimum temperature conditions. Within this goal, four specific objectives are identified:

1) Verify the flow-dose relationship for the system at a nominal UV transmittance of 65% to simulate membrane-filtered effluent. Note: the actual transmittance will be 56%.

2) Verify the flow-dose relationship for the system at a nominal UV transmittance of 55% to simulate granular filtered effluent. Note: the actual transmittance will be 46%.

3) Verify the dose delivered by the downstream lamp module (#1) by collection of samples disinfected only by lamp modules #3 and #2. These tests will be conducted at a nominal transmittance of 55% (actual 46%) for a granular filtered effluent simulation.

4) Verify the velocity profiles on the influent end, between lamp units #3 and #2, and the effluent end of the reactor train.

Note: the application of this disinfection system to reverse-osmosis filtered effluent will not be validated.

5.2 ROLES AND RESPONSIBILITIES OF PARTICIPANTS IN THE VERIFICATION TESTING

Figure 5-1 presents the key technical personnel for this ETV and the common lines of communication.

5.2.1 NSF International (NSF)

The Source Water Protection Technologies ETV Pilot is administered through a cooperative agreement between USEPA and NSF International, Inc. (NSF), its verification partner organization (Figure 5-1). NSF administers the Pilot, and has selected a qualified Field Testing Organization (FTO), HydroQual, Inc. to develop and implement this Verification Test Plan (VTP).

NSF's other responsibilities include:

- Review and approval of the VTP;
- Oversight of quality assurance including the performance of technical systems and data quality audits as prescribed in the Quality Management Plan;
- Coordination of verification report peer reviews including review by the Stakeholder Advisory Group and Technology Panel;
- Approval of the Verification Report;
- Preparation and dissemination of the Verification Statement.

Key contacts at NSF relating to this VTP include:

Mr. Thomas Stevens, Program Director
Ms. Maren Roush, Project Coordinator
NSF International
789 Dixboro Road
Ann Arbor, MI 48105
(734) 769-5347
stevenst@nsf.org

5.2.2 U.S. Environmental Protection Agency (USEPA)

The USEPA's National Risk Management Research Laboratory provides administrative, technical and quality assurance guidance and oversight on all Source Water Protection Technologies Pilot activities. The USEPA will have review and approval responsibilities through various phases of the verification project:

- Verification Test Plan
- Verification Report
- Verification Statement
- Dissemination of the Verification Report and Verification Statement

Key contacts for this specific VTP include:

Mr. Ray Frederick
USEPA – NRML Urban Watershed Management Branch
2890 Woodbridge Avenue (MS-104)
Edison, NJ 08837-3679
(732) 321-6627
(732) 321-6640 (fax)
Frederick.ray@epamial.epa.gov

5.2.3 Field Testing Organization (FTO), HydroQual, Inc.

The selected FTO is HydroQual, Inc., Mahwah, New Jersey. HydroQual has a well-established, international reputation for expertise in the area of ultraviolet disinfection technologies.

Mr. O. Karl Scheible, Project Director, will provide overall technical guidance for the verification test program. Mr. Egon T. Weber II, Ph.D. will serve as the Project Manager and will be responsible for day-to-day operations, project administration, and lab setup and oversight. Mr. Michael C. Cushing will be the lead field-technician, responsible for system installation, startup, sampling and record keeping. Mr. Prakash Patil and Ms. Tina McKay will be the project microbiologists. Other HydroQual personnel who will have support roles during the verification projects include Ms. Joy McGrath (QA/QC Officer) and Messrs. Wilfred Dunne and Francisco Cardona (Field/Laboratory Support). HydroQual may also use additional in-house expertise as required.

HydroQual's responsibilities include:

- Develop the VTP in conformance with the generic protocol, including its revisions in response to comments made during the review period;
- Coordinate the VTP with the Vendor and NSF, including documentation of equipment and facility information and specifications for the VTP;
- Contract with sub-consultants and general contractors as needed to implement the VTP;
- Coordinate and contract, as needed, with the Host test facility and arranging the necessary logistics for activities at the plant site;
- Manage the communications, documentation, staffing and scheduling activities to successfully and efficiently complete the verification;
- Oversee and/or perform the verification testing per the approved VTP;
- Manage, evaluate, interpret and report the data generated during the verification testing;
- Prepare and review of the Draft Verification Report.

HydroQual's main office is located in Mahwah, New Jersey and has a staff of nearly 110. The mailing address is:

HydroQual, Inc.
One Lethbridge Plaza
Mahwah, New Jersey 07430
(201) 529-5151
(201) 512-3825 Fax
http://www.hydroqual.com

Dr. Weber will be the primary contact person at HydroQual, Inc.

Telephone extension: 7401 or

Email: eweber@hydroqual.com

Mr. Scheible can be reached at extension 7378 or

Email: kscheible@hydroqual.com

5.2.4 ETV Host Site Parsippany Troy-Hills (PTRH) Wastewater Treatment Plant

The host facility for conducting this ETV will be The Parsippany Troy-Hills Wastewater Treatment Plant located in Parsippany, New Jersey.

The host facility's responsibilities include:

- Dedicating the required area(s) for test equipment and setup;
- Provide reasonable access to the facility for non-plant employees;
- Provide some logistical support including personnel and/or equipment;
- Review, approve and/or assist activities affecting the plant, such as electrical connections from plant main feed.

The plant is located at:

139 Edwards Road
Parsippany, New Jersey 07054
(973) 428-7953

Mr. Phil Bober, P.E. is the designated ETV liaison for PTRH. He can be reached at the above telephone number.

5.2.5 UV Technology Vendor ONDEO DEGREMONT Inc. (ODI)

The UV system to undergo verification is provided by ODI and represents a ¼ scale pilot of their Aquaray® 40 HO VLS UV system. ONDEO DEGREMONT Inc.'s responsibilities will include:

- Provide the test unit for verification and all ancillary equipment, instrumentation, materials and supplies necessary to operate, monitor, maintain and repair the system;
- Provide documentation and calculations necessary to demonstrate the system's conformity to commercial systems, hydraulic scalability, and to the requirements to the protocol;
- Provide descriptive details of the system, its operation and maintenance, its technical capabilities, and intended function in reuse applications;
- Provide technical support for the installation and operation of the UV system including designation of a staff technical support person, and an on-site technician for training and system startup;
- Certify that installation and startup of system is in accordance with the manufacturer's recommendations;
- Review and approval of the VTP; and
- Review and comment on the Verification Report and Verification Statement.

ODI is located in Richmond, Virginia at the following address:

ONDEO DEGREMONT Inc.
510 E. Jackson Street
Richmond, Virginia 23219-1436
(804) 521-7460
(804) 225-8121 Fax

Mr. Bruno Ferran will be the primary contact for ONDEO DEGREMONT Inc. He can be reached at the above telephone number or:

Email: ferranb@denard.com

5.2.6 Support Organizations

The FTO has identified one other organization that will provide support for activities that cannot be provided by NSF, EPA, HydroQual or ONDEO DEGREMONT Inc. This organization will be a subcontractor of and subordinate to HydroQual.

International Light, Inc.
17 Graf Road
Newburyport, Massachusetts 01950
Photodetector and radiometer calibrations

5.2.7 Technology Panel on High Rate Disinfection

The ETV Technology Panel on High-Rate Disinfection will serve as a technical and professional resource during all phases of the verification, including the review of test plans and the issuance of verification reports.

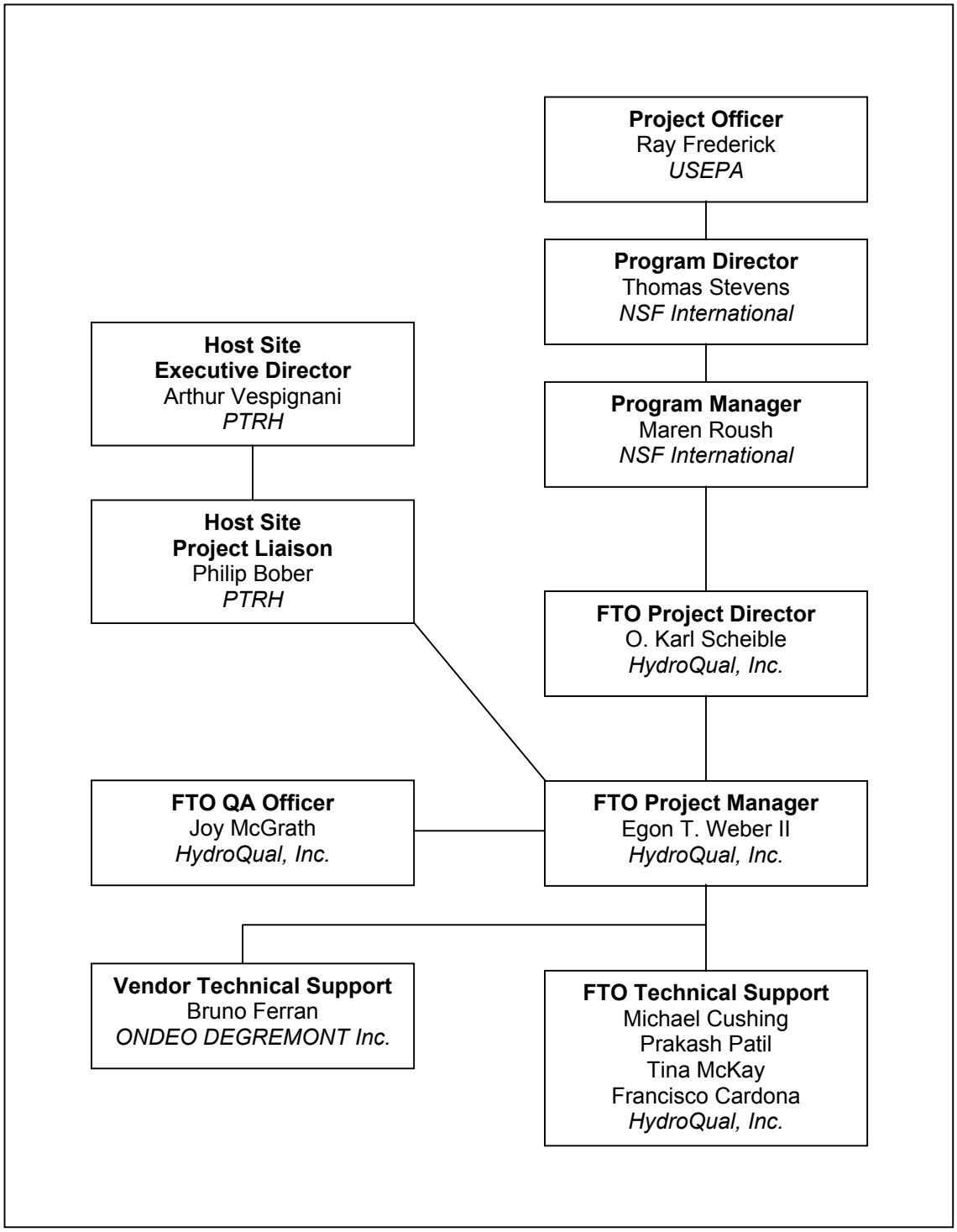

Figure 5-1. Key Technical and QA/QC Personnel for this ETV.

5.3 GENERAL TECHNICAL APPROACH

5.3.1 Dose Delivery Verification

The ETV's first technical objective is met by demonstrating, or verifying, the ability of a specific system to deliver an effective UV dose. This is the "delivered dose", which is the dose actually received by the microbes in the wastewater. Direct biological assay procedures have generally been used to estimate the delivered dose for specific reactor configurations, typically as a function of the hydraulic loading rate. The bioassay is a viable and accepted method and has been used successfully for many years, whereby the results are often applied to qualification requirements in bid documents for wastewater treatment plant applications.

Under this Test Element bioassays will be run using two water conditions achieved by mimicking transmittances found under typical reuse applications. Two different water sources will be used: (1) A "clean" water matrix (from a potable water supply) to simulate reuse applications where membrane filtration is the upstream process; and (2) Granular filtered secondary effluent (supplied by the treatment plant) to simulate reuse applications where granular filtration is the upstream process. In these cases, dose delivery will be verified at nominal UV transmittances of 65% and 55% respectively (54% and 44% actual). The range of hydraulic loadings will be between 150 and 750 gpm.

5.4 ANALYTICAL MEASUREMENTS FOR THIS ETV

There are many physical, and chemical analyses that will be conducted during this reuse ETV (Table 5-1). The sample collection and preservation requirements of both critical and non-critical parameters are presented in Table 5-2. The standard methods are presented in Table 5-3.

Table 5-1. Description of Parameter Measurements

	Parameter	Description
1	Temperature	The average temperature of the batch will be measured during the flow tests.
2	pH	The pH of the test batches will be measured before and after the addition of sodium thiosulfate.
3	Total Chlorine	Total Chlorine will be measured on potable source water before and after dechlorination.
4	%Transmittance	Each grab influent sample for the UV unit will be analyzed for percent transmittance at 254 nm (%T).
5	Turbidity	Each prepared test batch will be checked before and after chemical adjustment.
6	MS2 Coliphage	All grab samples will be analyzed for coliphage.
7	Headloss	Headloss will be determined under all flow rates during the

	Parameter	Description
		shakedown phase.
8	Depth	The depth of the water in open channel systems will be verified at each flow event.
9	Relative UV Intensity	Intensity meter readings on the UV unit will be recorded at the start of each flow event or will be recorded with a datalogger.
10	Lamp Hours	The cumulative lamp hour meters will be recorded at each sampling.
11	Voltage/Current	Voltage and current to the system will be measured at each sampling or recorded with a datalogger
12	Flow	Magnetic flow meters will be used to measure flow rates. Typically, flow rates will be recorded at the beginning and end of each flow event.

Table 5-2. Summary of Required Measurements and Sample Preservation.

Parameter/ Technology	Critical/ Non-Critical	Sample Quantity	Container	Preservation	Holding Time
Temperature	N	120 mL	Plastic	N/A	Inst.
pH	N	120 mL	Plastic	N/A	Inst.
Turbidity	N	120mL	Plastic	N/A	Inst.
Total Chlorine	C	120 mL	Plastic	N/A	Inst.
%Transmittance	C	120 mL	Plastic, Sterile	Ice/4ºC	48 Hours
MS2 Coliphage	C	120 mL	Plastic, Sterile	Ice/4ºC	48 Hours
Headloss	C	-	-	-	-
Depth	C	-	-	-	-
UV Intensity	C	-	-	-	-
Lamp Hours	N	-	-	-	-
Voltage/Current	N	-	-	-	-
Flow	C	-	-	-	-

5.4.1 Sampling and Monitoring Points

Sampling points identified are presented in Figure 5-2.

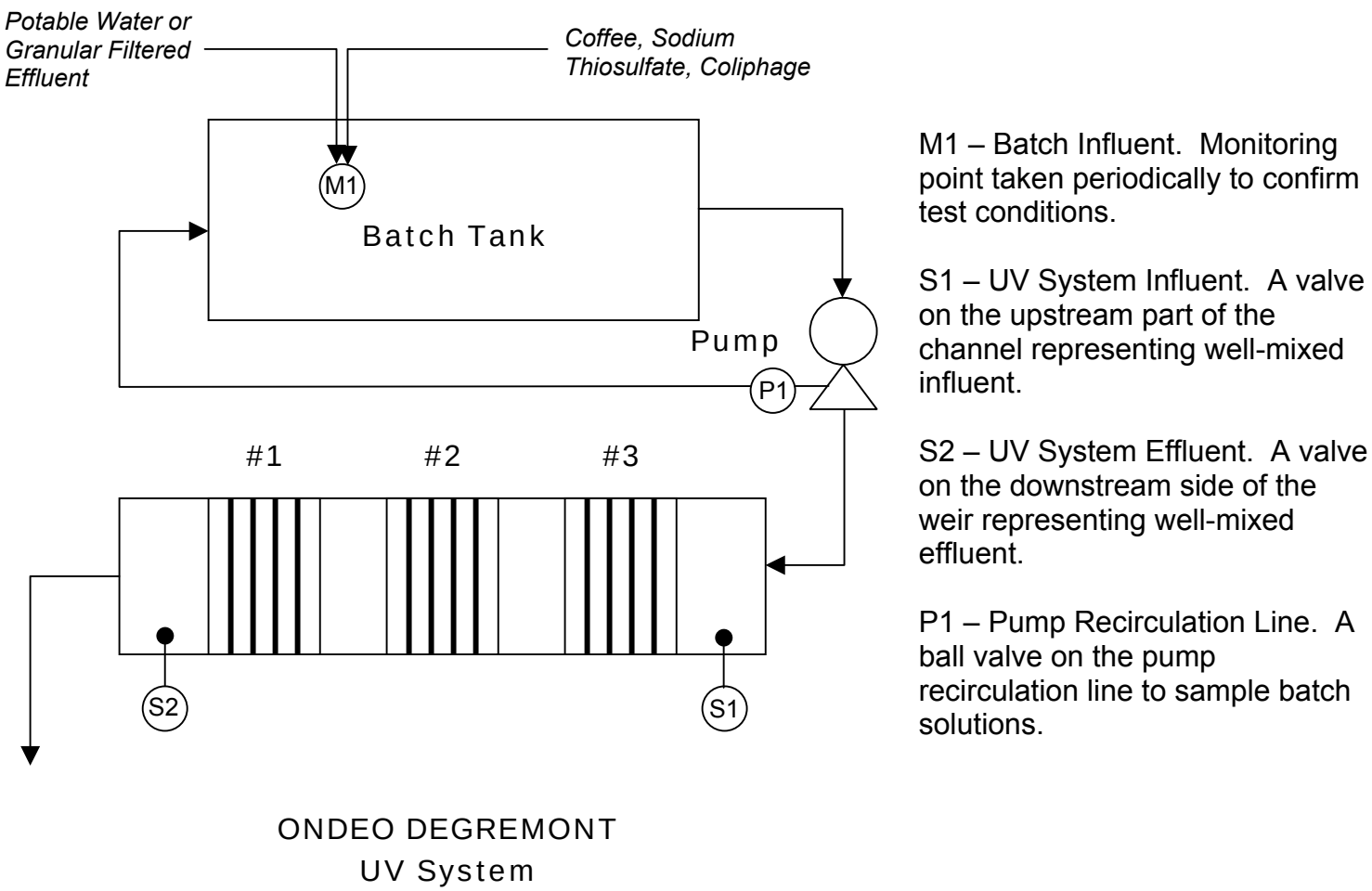

M1 – Batch Influent. Monitoring point taken periodically to confirm test conditions.

S1 – UV System Influent. A valve on the upstream part of the channel representing well-mixed influent.

S2 – UV System Effluent. A valve on the downstream side of the weir representing well-mixed effluent.

P1 – Pump Recirculation Line. A ball valve on the pump recirculation line to sample batch solutions.

Figure 5-2. Sampling and Monitoring Points.

5.4.2 Frequency of Sampling/Monitoring

Refer to Tables 4-4 and 4-5 for the default sampling/analytical schedule. The lamp output intensity and the overall power consumption of the system will be recorded continuously throughout each flow set, or if necessary will be recorded at the start of each sampling event.

5.4.3 Planned Approach for Evaluating Objectives (i.e. Data Analysis)

After data validation and reduction, the data will be used to quantify the projects overall objectives. These include:

- Delivered dose at discrete hydraulic loadings at nominal UV transmittances of 55% and 65% (44% and 54% actual) using coliphage as an indicator organism.
- Hydraulic characteristics as determined from the flow velocity and head loss measurements.

Plots/Comparisons

Coliphage Calibration

Log survival ratio vs. collimated beam dose

Dose-Flow Relationship

Field delivered dose vs. hydraulic loading, can be normalized to single lamp module

Flow Velocity Fields

Flow velocity vs. location

Flow velocity at each point compared to theoretical velocities

5.4.4 QA/QC Sampling

Additional samples will be collected to meet the required QA/QC objectives. Duplicate samples (i.e., two discrete samples collected in succession) will provide an indication of field sampling reproducibility. Some samples will also be split and replicate analyses conducted. This will be an indication of laboratory reproducibility. Table 5-4 summarizes the number of QA/QC samples to be collected and analyzed per analytical parameter.

5.5 SAMPLING PROCEDURES

5.5.1 Method Used to Establish Steady-state Conditions

Based on previous experience and manufacturer's recommendations, steady-state is contingent upon lamp output. During the shakedown phase, a correlation between elapsed time and output (measured by a fixed point intensity measurement) will be developed. The ONDEO

DEGREMONT Inc. system will be allowed a minimum of thirty minutes warm-up time unless the elapsed time vs. output correlation demonstrates otherwise.

5.5.2 Sampling/Monitoring Procedure

Sterile plastic cups for samples will be used on a grab basis. Sample containers may include sterile 120 mL specimen cups for coliphage analyses, total chlorine, turbidity, %T, and pH analyses. The coliphage containers will be transported in PVC containers or closed coolers to avoid any contact with sunlight.

5.5.3 Sample Container/Identification Labeling

Example:	
ODI Reuse 65% T B 17 150a gpm – EFF-B (MS2 % T) 9/26/02 Time: _____MCC	Vendor ID/Reuse ETV, 65% T, Phage Batch 17 Flow Rate, Sample Location (MS2 Coliphage Analysis, %T Analysis) Date, Time Sample Collected, Sample Collector

A simpler sample identification procedure may be used if the samples are labeled unambiguously and cannot become confused with any other sample sets. For example, the time the sample is collected may be omitted if the appropriate data can be obtained from the field data sheet in an unambiguous fashion.

5.5.4 Suitability of Sampling Procedure With Respect to Matrix

All sampling/monitoring procedures are appropriate for the associated chemical, analytical or physical parameter.

5.5.5 Sampling/Monitoring Equipment Calibration for Those Associated with Critical Parameters

Flow- Magnetic flow meter

The meters' calibration will be checked periodically as described in Section 4 and will be flow inferred by tank drawdown vs. time measurements. The flow readings should be within 5 percent of the drawdown measurements. These tests will be conducted at a minimum of three flow rates.

UV Intensity – SED 240 Detector

International Light will calibrate the detectors within six weeks of startup and not less than every four months thereafter using standards traceable to the National Institute of Standards and Technology.

5.5.6 How Cross-Contamination Between Samples Will be Avoided.

All sample containers will be filled directly at each location. No secondary sampling device will be used. Specimen cups will be destroyed after one use.

5.5.7 Assure that Representative Samples are Collected

Each sampling location was chosen so that representative samples could be collected (see Fig. 5-2).

5.5.8 List of Sample Quantities to be Collected, Container Type, Sample Preservation, Holding Times

Refer to Table 5-2 for the required measurements (chemical, physical or analytical) for this ETV.

5.6 TESTING AND MEASUREMENT PROTOCOLS

The standard methods used to make the critical measurements required for this study are listed in Table 5-3 along with the analysis agency, and are also included in Appendices B, C, and D.

5.6.1 Standard Methods/Non-standard Methods

Analytical methods for the required parameters are summarized in Tables 5-3. Tables 5-4 through 5-6 outline QA objectives for all measurements.

Table 5-3. Summary of Standard Methods and Procedures

Parameter	Sample Type	Analytical Agency	Method Title	Method Type	Reference and Method
Temperature	Filtered Secondary Effluent/Potable Water	HQI	Temperature – Laboratory & Field Measurements	Direct Measurement	HQI LM-28[1] 2550-B APHA, (1995)
pH	Filtered Secondary Effluent/Potable Water	HQI	pH Value	Direct Measurement	HQI LM-21[1] APHA, 1995 4500-H^+
Total Chlorine	Filtered Secondary Effluent/Potable Water	HQI	Total Chlorine	Colorimetric	HQI LM-6; 7[1] HACH 8167; 10070
% Transmittance	Filtered Secondary Effluent/Potable Water	HQI	UV Transmittance at 254 nm	Direct measurement	HQI LM-29[1]
Turbidity	Filtered Secondary Effluent/Potable Water	HQI	Turbidity	Nephelometric	HOI LM-34[1] 2130-B
MS2 - Coliphage	Filtered Secondary Effluent/Potable Water	HQI	Enumeration of F-specific coliphage	Double-Plating	Special Laboratory Protocol-1 Appendix D

[1]HQI-LM – HydroQual, INC. Laboratory Method Manual, Appendix B

5.7 QA/QC CHECKS

5.7.1 Quantitative QC Objectives

5.7.1.1 Precision

The precision will be evaluated based on replicate measurement. The relative percent differential (RPD) will be used to present precision as follows:

$$RPD = \frac{y_1 - y_2}{(y_1 + y_2)/2} \times 100\%$$

where y_1 and y_2 are two measurements.

5.7.1.2 Accuracy

For measurements where a standard reference material (SRM) is used, the accuracy is calculated as follows:

$$\%R = \left(\frac{y_m}{y_{srm}}\right) \times 100\%$$

where:

%R = percent recovery

y_m = measured value of SRM

y_{srm} = actual value of SRM

5.7.1.3 Completeness

Unless otherwise specified in each Test Element, data completeness will be greater than 80%. The completeness is defined as follows for all measurements:

$$\%C = \left(\frac{V}{T}\right) \times 100\%$$

where:

%C = percent completeness

V = number of measurements judged valid

T = total number of measurements

5.7.1.4 QC Objectives for Water Analyses

The various water analyses performed for this ETV should comply with the QC objectives in Table 5-4.

Table 5-4. QA/QC Objectives for Analyses Performed by HydroQual.

Parameter	Units	Blank Freq	Rep Freq	RPD	CCV Freq	CCV %REC
Temperature	°C	N/A	N/A	N/A	N/A	N/A
pH	s.u.	N/A	N/A	N/A	N/A	N/A
Total Chlorine	mg/L	1/10	1/10	30	1/20	70-130
Transmittance, Percent	%	1/10	1/10	0.5*	N/A	N/A
Turbidity	NTU	1/10	1/10	0.2	N/A	N/A
Coliphage	pfu/mL	See Table 5-5				

For other physical measurements. Refer to test plan for QA/QC requirements.

ICV/CCV – Initial and Continuing Calibration Verification - The ICV/CCV solution is used to verify the validity of the meter calibration and performance of the test.

Rep – Replicate Sample – A laboratory replicate.

5.7.1.5 QC Objectives for Coliphage Enumeration Procedures

The Coliphage enumeration procedure (Special Laboratory Protocol-1) must follow the QC criteria in Table 5-6. Some Objectives are automatically checked by the Excel data reduction spreadsheets that will flag data that does not meet the criteria.

Table 5-5. Coliphage Enumeration QA/QC Criteria.

QC Objective	Frequency	Acceptance Criteria
30-300 pfu/mL	Every Sample	At least two plates must fall in this range for each sample enumerated.
Plating Replication	Every Sample	Identical dilutions meeting the 30-300 pfu/mL criteria must not vary more than factor of three (0.46 log units).
Blanks	Every influent effluent pair	Less than three plaques.
Spot Test	Every Plating Session	Clear plaque forming capacity.
Sample Replicates	As noted in daily work plan. Table 4-5.	Log survival ratios within 0.5 log units.

5.7.1.6 QC Objectives for Dose Response Results

The dose-response results (Special Laboratory Protocol-3) are to be verified according to the criteria in Table 5-7.

Table 5-6. Dose Response QA Criteria

QC Objective	Frequency	Acceptance Criteria
Field Intensity Mapping	Before and after every D/R event	Ninety percent of the data points shall have a ratio of single value to the average between 0.9 and 1.1
0-Control and Final-Control	Each D/R event	Percent difference must be less than 50% (0.32 log units)
Representativeness	Each D/R event	80% of the D/R data must fall within 0.5 log units of historical HydroQual D/R results
Intensity Check	3 times per D/R event	Relative readings must be within +/- 5% of average.

5.7.2 Qualitative QC Objectives

5.7.2.1 Comparability

Comparability will be achieved by using consistent and standardized analytical methods and National Institute of Standards Technology (NIST) traceable standards. Procedures, data presentation, and units will be consistent with accepted conventions.

5.7.2.2 Representativeness

Each sampling location was chosen so that representative samples could be collected. Locations were identified where natural mixing would prohibit settling of solids, which could bias analytical results (see Fig. 5-2).

5.7.3 Consequences of Not Meeting QC Objectives

If the QC objectives for a measurement are not met, an investigation of the difficulties will be conducted and, if necessary, corrective action taken. Data failing to meet any QC objective will be flagged in the final technical memorandum. As long as the completeness objectives are met with unflagged data, the QC objectives will have been met

5.8 DATA REPORTING, DATA REDUCTION AND DATA VALIDATION

5.8.1 Reporting Requirements

Table 5-8 summarizes reporting requirements for all chemical and physical measurements.

Table 5-7. Reporting Requirements For Chemical/Physical Measurements

Analysis/Measurement	Units
Temperature	ºC
pH	s.u.
Total Chlorine	mg/L
%Transmittance	%/cm @ 254 nm
Turbidity	NTU
MS2 Coliphage	pfu/mL
Headloss	cm
UV Intensity	mW/cm^2
Voltage/Current/Power	Volts, Amps, Watts
Flow	gpm

5.8.2 Documentation

All field and laboratory activities must be thoroughly documented. Field documentation will include field logbooks, photographs, field data sheets, and chain-of-custody and analytical request forms, laboratory bench sheets and instrument printouts.

Field notes must be recorded in a bound logbook. Each page must be labeled with the project name, date, and project number. Field logbooks will be used to record all equipment operating data. Completed pages shall be signed and dated by the individual responsible for the entries and the Project Manager. Pertinent field data sheets can be found with their associated Field Protocols and are in Appendix B.

All photographs taken shall be recorded in the field logbook. These entries shall include the time, date, direction, subject, and photographer's name.

Any deviations from the approved final test plan shall be thoroughly documented in the field logbook.

Original chain-of-custody and analytical request forms shall accompany all samples shipped to the analytical laboratory, including those brought to HydroQual's laboratory. HydroQual's Chain-of-Custody form is presented as Figure 5-3.

As appropriate, electronic data storage and retrieval capabilities shall be employed in order to maximize data collection and minimize labor hours required for monitoring.

HYDROQUAL, INC.
1 Lethbridge Plaza
Mahwah, NJ 07430
Tel: (201) 529-5151
Fax: (201) 529-5728

CHAIN OF CUSTODY DOCUMENT

Job #:	**Project Manager:**	**Sampler (Signature):**	**(Print):**
Sample Origin/Location:			

SAMPLE DESCRIPTORS Type: B = Blank; C = Composite; G = Grab;
Matrix: L = Liquid; S = Soil/Sludge/Sediment; W = Wipe; G = Gas

PRESERVATIVES A = Acid; C = Caustic: I = Ice; N=None; O = Other

SAMPLE ID	DATE	TIME	TYPE	MATRIX	SAMPLE DESCRIPTION		**PARAMETERS/ANALYTES**	Preservatives		Preservatives		Preservatives		Preservatives		Preservatives

1. Relinquished by (**Signature**):	Date: Time:	Printed Name & Organization:	Date: Time:	2. Received by (**Signature**):	Date: Time:	Printed Name & Organization:
3. Relinquished by (**Signature**):	Date: Time:	Printed Name & Organization:	Date: Time:	4. Received by (**Signature**):	Date: Time:	Printed Name & Organization:

Comments & Special Instructions

5.8.3 Document Handling

All original copies of any document are to be kept in a secure environment. All originals shall be kept in a central file at HydroQual in the office of the Project Manager. Two (2) sets of copies will be made; a set for the field office and a set for central filing. Other copies may be distributed to the vendor or other parties at the discretion of the Project Manager.

The local field technician must complete a daily summary describing all activities performed onsite, personnel present, date, and times of pertinent events. This report shall be faxed or delivered at the end of each day to the Project Manager. The lead technician shall debrief either the Project Manager or Project Engineer daily. The Project manger and the field technician must sign this daily summary.

5.8.4 Data Reduction/Validation and Reporting

5.8.4.1 Data Reduction

All measurements and analytical results must be reduced into units that are consistent with the methods, and which meet the comparability objective. In general, the analyst performing the test will record all raw data in laboratory notebooks or on worksheets in standardized format. Each analytical method will contain detailed instructions and equations for calculating the respective parameters.

5.8.4.2 Data Validation

Data validation is the process of filtering data and accepting or rejecting these data on the basis of sound criteria. Validation procedures will include:

- Ensuring close adherence to the specified preparation, cleanup, and analysis procedure;
- Data transferred from bench-sheet to spreadsheet will be visually checked by another technician;
- Examination of precision, accuracy, and other quality control data generated during the project;
- Ensuring the use of properly calibrated equipment and maintaining analytical instrumentation.

Data acquired for routine analyses where laboratory data reduction is performed daily (e.g. dose-responses, %T etc.) will be validated daily by Dr. Egon T. Weber II. Weekly reviews (and periodic random reviews) of data QA/QC objectives will be performed by the project QA Officer Joy McGrath. Where QC criteria are evaluated automatically by spreadsheet, the algorithms will be verified by a second party, either the Project Manager or the QA Officer.

Final and interim reports will be checked against the laboratory printouts for errors.

QC results outside of the data quality objectives specified in Section 5.7 are considered outliers for this project and will be flagged. Records of all data will be maintained even those judged to be outliers or of questionable value.

5.8.4.3 Data Reporting

All original laboratory data will be recorded in a permanent manner, and will be readily traceable through all steps of the data generation/reduction/validation/review process. Field measurements will be recorded in appropriate field notebooks/data sheets and results will be reported in tabulated summary form.

5.9 ASSESSMENTS

The project QA Officer will be responsible for making unannounced field and laboratory audits to observe adherence to cleaning/operational protocols, sample collection, sample handling practices and analytical procedures/methodologies.

The project QA Officer will maintain up-to-date status reports on quantitative QA Criteria and will, in conjunction with project manager, validate data.

At least one internal field audit and one laboratory audit shall be conducted every calendar month while the verification testing is underway. The auditor shall observe all aspects of the field and/or laboratory tests being conducted at that time. The QA Officer shall confirm that all sampling, operational, field measurements and laboratory analyses are conducted within the guidelines of these protocols and in strict accordance with the procedures presented within. Any deviations must be documented and technically justified.

Audits will be conducted by an NSF representative or and agent appointed by NSF at least once each ETV. These audits will address all record keeping, laboratory and field procedures, and their adherence to the Generic Protocol and the VTP.

Audits will be conducted occasionally by the EPA or an agent appointed by the EPA periodically to ensure that the ETV program elements comply with the philosophy and expectations of the ETV program.

SECTION 6

GLOSSARY

Terms and acronyms used in this Protocol that have special meaning are defined here:

Accuracy - A measure of the closeness of an individual measurement or the average of a number of measurements to the true value and includes random error and systematic error.

EPA - The United States Environmental Protection Agency, its staff or authorized representatives.

Field Testing Organization - An organization qualified to conduct studies and testing of UV disinfection technology in accordance with the Verification Protocol.

Generic Verification Protocol - A written document that clearly states the objectives, goals, and scope of the testing under the ETV Program and that establishes the minimum requirements for verification testing and for the development of a verification test plan. A protocol shall be used for reference during Manufacturer participation in the verification testing program.

NSF - NSF International, its staff, or other authorized representatives.

Precision - A measure of the agreement between replicate measurements of the same property made under similar conditions.

Quality Assurance Project Plan (QAPP) - A written document that describes the implementation of quality assurance and quality control activities during the life cycle of the project. The QAPP is a required component of a Verification Test Plan.

Representativeness - A measure of the degree to which data accurately and precisely represent a characteristic of a population parameter at a sampling point or for a process condition or environmental condition.

Standard Operating Procedure - A written document containing specific procedures and protocols to ensure that quality assurance requirements are maintained.

Vendor - A business that assembles or sells UV Disinfection Technology.

Verification - To establish the evidence on the range of performance of equipment and/or device under specific conditions following an established protocol(s) and test plan(s).

Verification Test Plan (VTP) - A written document that establishes the detailed test procedures for verifying the performance of a specific technology. It also defines the roles of the specific parties involved in the testing and contains instructions for sample and data collection, sample handling and preservation, and quality assurance and quality control requirements relevant to a given test site.

Verification Report - A written document that summarizes a final report reviewed and approved by NSF on behalf of EPA or directly by EPA.

SECTION 7

REFERENCES

APHA (1995) American Public Health Association, American Water Works Association (AWWA). Water Environment Federation (WEF). 1998. Standard Methods for the Examination of Water and Wastewater, 20th ed. Washington, D.C.: American Public Health Association.

Bolton, J.R., trans. (1997). "UV-Desinfektionsanlagen fur die Trinkwasserversorgung – Anfrorderungen und Prufung," (UV Systems for Disinfection in Drinking Water Supplies – Requirements and Testing). Bonn, Germany: Deutscher Verein des Gas – und Wasserfaches e.V. (DVGW) (German Association on Gas and Water).

HydroQual, INC., (January 2002). "Generic Verification Protocol for Secondary Effluent and Water Reuse Disinfection Applications" version 3.4. Prepared for NSF International and the U.S. Environmental Protection Agency under the Environmental Technology Verification Program, Source Water Projection Pilot. Mahwah, NJ.

ISO 10705-1: International Standards Organization (ISO). (1995). "Water Quality-Detection and Enumeration of Bacteriophage. Part I: Enumeration of F-Specific RNA Bacteriophage." Switzerland: International Standards Organization.

NWRI/AWWARF, (2000) National Water Research Institute and American "Water Works" Association Research Foundation. "Ultraviolet Disinfection Guidelines for Drinking Water and Water Reuse". Fountain Valley, California.

United States Environmental Protection Agency (USEPA). (1986). "Design Manual, Municipal Wastewater Disinfection". EPA/625/1-86/021.

Janex M.L., Nace A., Do-Quang Z. (2002). UV Fluence Rate Evaluation in a UV System: Simulating the Impact of Operating and Design Parameters, presented at the 2002 annual AWWA show in New Orleans.