Environmental Technology Verification

Test Report of Mobile Source Emissions Control Devices

Lubrizol Engine Control Systems Purifilter SC17L

Prepared by

Southwest Research Institute

Research Triangle Institute

Under a Cooperative Agreement with
U.S. Environmental Protection Agency

THE ENVIRONMENTAL TECHNOLOGY VERIFICATION PROGRAM

U.S. Environmental Protection Agency

ETV Joint Verification Statement

TECHNOLOGY TYPE:	**MOBILE DIESEL ENGINE AIR POLLUTION CONTROL**
APPLICATION:	**CONTROL OF EMISSIONS FROM MOBILE DIESEL ENGINES IN HIGHWAY USE WITH A PARTICULATE FILTER**
TECHNOLOGY NAME:	**LUBRIZOL ENGINE CONTROL SYSTEMS PURIFILTER PARTICULATE FILTER**
COMPANY:	**LUBRIZOL ENGINE CONTROL SYSTEMS**
ADDRESS:	**165 PONY DRIVE NEWMARKET, ONTARIO CANADA L3Y 7V1 PHONE: (905) 853-5500**

The U.S. Environmental Protection Agency (EPA) has created the Environmental Technology Verification (ETV) Program to facilitate the deployment of innovative or improved environmental technologies through performance verification and dissemination of information. The goal of the ETV Program is to further environmental protection by accelerating the acceptance and use of improved and cost-effective technologies. ETV seeks to achieve this goal by providing high-quality, peer-reviewed data on technology performance to those involved in the design, distribution, financing, permitting, purchase, and use of environmental technologies.

ETV works in partnership with recognized standards and testing organizations; stakeholder groups, which consist of buyers, vendor organizations, permitters, and other interested parties; and with the full participation of individual technology developers. The program evaluates the performance of innovative technologies by developing test plans that are responsive to the needs of stakeholders, conducting field or laboratory tests (as appropriate), collecting and analyzing data, and preparing peer-reviewed reports. All evaluations are conducted in accordance with rigorous quality assurance protocols to ensure that data of known and adequate quality are generated and that the results are defensible.

The Air Pollution Control Technology Verification Center (APCTVC), one of six centers under the ETV Program, is operated by Research Triangle Institute (RTI), in cooperation with EPA's National Risk Management Research Laboratory. The APCTVC has evaluated the performance of an emissions control system consisting of a precious and base metal, passively regenerated particulate filter for mobile diesel engines.

ETV TEST DESCRIPTION

All tests were performed in accordance with the general test plan *Test/QA Plan for the Verification Testing of Diesel Exhaust Catalysts, Particulate Filters, and Engine Modification Technologies for Highway and Nonroad Use Diesel Engines* and the *Test-Specific Addendum to ETV Mobile Source Test/QA Plan for Lubrizol Engine Control Systems precious metal passively regenerating particulate filter*. These documents are written in accordance with the applicable generic verification protocol and include requirements for quality management, quality assurance, procedures for product selection, auditing of the test laboratories, and test reporting format.

The mobile diesel engine air pollution control technology was tested on two different engines at Southwest Research Institute. The performance verified was the percentage emission reduction achieved by the technology for particulate matter (PM), nitrogen oxides (NO_x), hydrocarbons (HC), and carbon monoxide (CO) relative to the performance of the same baseline engine without the technology in place. Operating conditions were documented and ancillary performance measurements were also made. A summary description of the ETV test is provided in Table 1.

Table 1. Summary Description of the ETV Test

Test type	Highway Transient Federal Test Procedure (FTP), heavy-duty cycle
First engine family	XNVXHO7.3ANE
First engine make–model year	Navistar International Corporation–1999
First engine service class	On-highway, heavy-duty diesel engine
First engine rated power	183 kW (244 bhp) @ 2,600 rpm
First engine displacement	7.3 L
Second engine family	1DDXHO8.5FJY
Second engine make–model year	Detroit Diesel Corporation (DDC)–2001
Second engine service class	On-highway, heavy-duty diesel engine
Second engine rated power	206 kW (275 bhp) @ 2,100 rpm
Second engine displacement	8.5 L
Technology	Lubrizol Engine Control Systems Purifilter particulate filter
Technology description	A precious and base metal, passively regenerated particulate filter used with ultralow-sulfur diesel (ULSD) fuel
Test cycle or mode description	One cold-start and three hot-start tests according to FTP test
Test fuel description	EPA standard low-sulfur and ultralow-sulfur No. 2 diesel fuels per 40 CFR Part 86.1313
Critical measurements	PM, NO_x, HC, and CO
Ancillary measurements	CO_2, exhaust back-pressure, exhaust temperature, and fuel consumption

VERIFIED TECHNOLOGY DESCRIPTION

This verification statement is applicable to Lubrizol Engine Control Systems Purifilter (Model SC17L) precious and base metal, passively regenerated particulate filter. It is applicable to mobile diesel engines fueled by commercial ULSD fuel (meeting the EPA specifications for 2007 at less than 15 ppm maximum sulfur content).

This verification statement describes the performance of the tested technology on the diesel engine and fuels identified in Table 1.

VERIFICATION OF PERFORMANCE

The Lubrizol Engine Control Systems Purifilter achieved the reduction in tailpipe emissions shown in Table 2 at the stated conditions.

Table 2. Verified Emissions Reductions for System Consisting of Lubrizol Engine Control Systems Purifilter

Test Engine	Device type	Fuel		Mean Emissions Reduction (%)				95% Confidence Limits on the Emissions Reduction (%)			
		Baseline	Controlled	PM[c]	NOx	HC	CO	PM[c]	NOx	HC	CO
Navistar	Aged	LSD	ULSD	95	[a]	88	71	91-99	[a]	79-97	70-73
DDC	Degreened	LSD	ULSD	86	[a]	[b]	87	83-90	[a]	[b]	83-92
DDC	Aged	LSD	ULSD	91	[a]	[b]	79	88-95	[a]	[b]	74-84

[a] The emissions reduction could not be distinguished from zero with 95% confidence.
[b] The emissions reduction could not be quantified or distinguished from 100% with 95% confidence.
[c] The verified PM emissions reduction combines reductions related to the control technology and the change in fuel sulfur level.

For the purposes of determining the status of the technology in regard to EPA's voluntary diesel retrofit program, the prospective user is encouraged to contact EPA's Office of Transportation and Air Quality (OTAQ) or visit the retrofit program web site at http://www.epa.gov/otaq/retrofit/.

The APCTVC QA Officer has reviewed the test results and quality control data and has concluded that the data quality objectives given in the generic verification protocol and test/QA plan have been attained. EPA and APCTVC quality assurance staff have conducted technical assessments at the test laboratory and of the data handling. These confirm that the ETV tests were conducted in accordance with the EPA-approved test/QA plan.

This verification statement verifies the emissions characteristics of the *Lubrizol Engine Control Systems Purifilter* for the stated application. Extrapolation outside that range should be done with caution and an understanding of the scientific principles that control the performance of the technologies. This verification focused on emissions. Potential technology users may obtain other types of performance information from the manufacturer.

In accordance with the generic verification protocol, this verification statement is valid, commencing on the date below, indefinitely for application of *Lubrizol Engine Control Systems Purifilter* within the range of applicability of the statement.

Original signed by L. W. Reiter *6/7/04*	*Original signed by A. R. Trenholm* *6/9/04*
Lawrence W. Reiter Ph. D Date	Andrew R. Trenholm Date
Acting Director	Director
National Risk Management Research Laboratory	Air Pollution Control Technology Verification Center
Office of Research and Development	
United States Environmental Protection Agency	

Environmental Technology Verification Report

Mobile Source Retrofit Air Pollution Control Devices

Lubrizol Engine Control Systems
Purifilter SC17L Particulate Filter

Prepared by

Research Triangle Institute
Southwest Research Institute

EPA Cooperative Agreement No. CR829434-01-1

EPA Project Manager:
Michael Kosusko
Air Pollution and Control Division
National Risk Management Research Laboratory
Office of Research and Development
Research Triangle Park, NC 27711

June 2004

Notice

This document was prepared by Research Triangle Institute (RTI) and its subcontractor Southwest Research Institute (SwRI), with partial funding from Cooperative Agreement No. CR829434-01-1 with the U.S. Environmental Protection Agency (EPA). The document has been submitted to RTI/EPA's peer and administrative reviews and has been approved for publication. Mention of corporation names, trade names, or commercial products does not constitute endorsement or recommendation for use of specific products.

Foreword

The Environmental Technology Verification (ETV) Program, established by the U.S. Environmental Protection Agency (EPA), is designed to accelerate the development and commercialization of new or improved technologies through third-party verification and reporting of performance. The goal of the ETV Program is to verify the performance of commercially ready environmental technologies through the evaluation of objective and quality-assured data so that potential purchasers and permitters are provided with an independent and credible assessment of the technology that they are buying or permitting.

The Air Pollution Control Technology Verification Center (APCTVC) is part of the EPA's ETV program and is operated as a partnership between Research Triangle Institute (RTI) and EPA. The Center verifies the performance of commercially ready air pollution control technologies. Verification tests use approved protocols, and verified performance is reported in verification statements signed by EPA. RTI contracts with Southwest Research Institute (SwRI) to perform verification tests on engine emission control technologies.

Retrofit air pollution control devices used to control emissions from mobile diesel engines are among the technologies evaluated by the APCTVC. The APCTVC developed (and EPA approved) the *Generic Verification Protocol for Diesel Exhaust Catalysts, Particulate Filters, and Engine Modification Control Technologies for Highway and Nonroad Use Diesel Engines* to provide guidance on the verification testing of specific products that are designed to control emissions from diesel engines.

The following report reviews the performance of the Lubrizol Engine Control Systems Purifilter SC17L precious and base metal, passively regenerated particulate filter. ETV testing of this technology was conducted during June and August 2003 at SwRI. All testing was performed in accordance with an approved test/QA plan that implements the requirements of the generic verification protocol at the test laboratory.

Availability of Report

Copies of this verification report are available from

- Research Triangle Institute
  Engineering and Technology Division
  P.O. Box 12194
  Research Triangle Park, NC 27709-2194

- U.S. Environmental Protection Agency
  Air Pollution Prevention and Control Division (E343-02)
  109 T. W. Alexander Drive
  Research Triangle Park, NC 27711

Web sites: http://www.epa.gov/etv/verifications/verification-index.html (electronic copy)
http://www.epa.gov/ncepihom/

Contents

ETV Joint Verification Statement i

Notice ii

Foreword iii

Availability of Report iv

Figures vi

Tables vi

Acronyms/Abbreviations vii

Acknowledgments viii

Section 1.0 Introduction 1

Section 2.0 Description of Products 2

Section 3.0 Test Documentation 5

3.1 Engine Description 5

3.2 Engine Fuel Description 6

3.3 Summary of Emissions Measurement Procedures 6

3.4 Deviations from the Test/QA Plan 8

3.5 Documented Test Conditions 9

Section 4.0 Summary and Discussion of Emission Results 11

4.1 Quality Assurance 16

Section 5.0 References 17

Figures

1. Mounting of Purifilter on Navistar Engine in Test Cell 4 3
2. Mounting of Purifilter on the DDC Engine in Test Cell 4.....4
3. Constant Volume Sampler Setup for Emissions Measurement 8

Tables

1. Engine Identification Information.....5
2. Selected Fuel Properties and Specifications 6
3. Engine Performance Data 9
4. Brake Specific Fuel Consumption.....10
5a. Emissions Test Data (English units) 12
5b. Emissions Test Data (metric units) 13
5c. Composite Weighted Emissions Values (English units) 14
5d. Composite Weighted Emissions Values (metric units) 15
6. Summary of Verification Test Emission Values 16
7. Summary of Verification Test Emission Reductions.....16

Acronyms/Abbreviations

ºF	degrees Fahrenheit
ºC	degrees Celsius
APCTVC	Air Pollution Control Technology Verification Center
bhp	brake horsepower
bhp-hr	brake horsepower hour
BSFC	brake specific fuel consumption
CFR	Code of Federal Regulations
CO	carbon monoxide
CO_2	carbon dioxide
DDC	Detroit Diesel Corporation
EPA	US Environmental Protection Agency
ETV	Environmental Technology Verification
FTP	Federal Test Procedure
ft	foot (feet)
g	gram(s)
HC	hydrocarbon(s)
HD	heavy duty
HFID	heated flame ionization detector
in.	inch(es)
in. Hg	inch(es) mercury
kW	kilowatt(s)
kPa	kilopascal(s)
lb	pound(s)
lb-ft	pound foot (feet)
LSD	low-sulfur diesel
m	meter(s)
min.	minute(s)
mm	millimeter(s)
N	newton(s)
N-m	newton-meter
NO_x	nitrogen oxide
NDIR	nondispersive infrared
OTAQ	Office of Transportation and Air Quality
Pa	pascal(s)
PDP	Positive Displacement Pump
PM	particulate matter
ppm	parts per million by volume
QA	quality assurance
QC	quality control
rpm	revolutions per minute
RTI	Research Triangle Institute
SOP	standard operating procedure
SwRI	Southwest Research Institute
ULSD	ultralow-sulfur diesel

Acknowledgments

The authors acknowledge the support of all those who helped plan and conduct the verification activities. In particular, we would like to thank Michael Kosusko, EPA's Project Manager, and Paul Groff, EPA's Quality Assurance Manager, both of EPA's National Risk Management Research Laboratory in Research Triangle Park, NC. We would also like to acknowledge the assistance and participation of all the Lubrizol personnel who supported the test effort.

For more information on the Lubrizol Engine Control Systems Purifilter, contact

Mr. Kevin Brown
Lubrizol Engine Control Systems
165 Pony Drive
Newmarket, Ontario
Canada L3Y 7V1
Telephone: (905) 853-5500
Fax: (905) 853-5801
Email: kfb@lubrizol.com
Web site: http://www.lubrizol.com/

For more information on verification testing of mobile sources air pollution control devices, contact

Ms. Jenni Elion
Research Triangle Institute
P.O. Box 12194
Research Triangle Park, NC 27709-2194
Telephone: (919) 541-6826
Email: jme@rti.org
Web site: http://etv.rti.org/apct/index.html

Section 1.0
Introduction

This report reviews the performance of the Lubrizol Engine Control Systems Purifilter SC17L. Environmental Technology Verification (ETV) testing of this technology was conducted during a series of tests in June and August 2003 by Southwest Research Institute (SwRI) under contract with the Air Pollution Control Technology Verification Center (APCTVC). The objective of the APCTVC and the ETV Program is to verify, with high data quality, the performance of air pollution control technologies. Control of air emissions from diesel engines is within the scope of the APCTVC. An APCTVC program area was designed by Research Triangle Institute (RTI) and a technical panel of experts to evaluate the performance of diesel exhaust catalysts, particulate filters, and engine modification control technologies for mobile diesel engines. Based on the activities of this technical panel, the *Generic Verification Protocol for Diesel Exhaust Catalysts, Particulate Filters, and Engine Modification Control Technologies for Highway and Nonroad Use Diesel Engines*[1] was developed. The specific test/quality assurance plan addendums for the ETV test of the technology submitted by Lubrizol were developed and approved on February 20, 2003.[2,3] The goal of the test was to measure the emissions control performance of the technology system and its emissions reduction relative to an uncontrolled engine.

A description of the Lubrizol Purifilter is presented in Section 2. Section 3 documents the procedures and methods used for the test and the conditions over which the test was conducted. The results of the test are summarized and discussed in Section 4, and references are presented in Section 5.

This report contains only summary information and data as well as the verification statement. Complete documentation of the test results is provided in separate test reports[4,5] and audit of data quality reports.[6,7] These reports include the raw test data from product testing and supplemental testing, equipment calibration results, and quality assurance (QA) and quality control (QC) activities and results. Complete documentation of QA/QC activities and results, raw test data, and equipment calibration results are retained in Southwest Research Institute's files for seven years.

Section 2.0
Description of Products

The APCTVC conducted verification testing for Lubrizol Engine Control Systems system described below (descriptions were provided by Lubrizol). The system consisted of Lubrizol Engine Control Systems Purifilter SC17L precious and base metal, passively regenerated particulate filter. The technology was provided directly to the APCTVC's test organization, Southwest Research Institute, as:

- one degreened Purifilter SC17L (serial number B55076), with documented degreening history, and
- one aged Purifilter SC17L (serial number B50462), with documented aging history.

The degreened filter was operated for a total of 110 engine hours on a Tri-Delta urban transit bus in service in Antioch, CA in June 2003. The aged filter was operated for a total of 1404 engine hours on a Tri-Delta urban transit bus in service in Antioch, CA between November 2002 and May 2003. The Tri-Delta buses were operated on ultralow-sulfur diesel (ULSD) fuel (15 ppm maximum sulfur content). Both the degreened and aged filters were the same model. The same aged filter was used for the tests on both engines.

The verification testing was conducted on two different engines: a 1999 Navistar 7.3 liter diesel engine and a Detroit Diesel Corporation (DDC) 8.5 liter diesel engine. In both cases, the filter was mounted 72 inches from the outlet of the turbocharger. Figures 1 and 2 show the engines in test cells with the filters mounted in the exhaust systems.

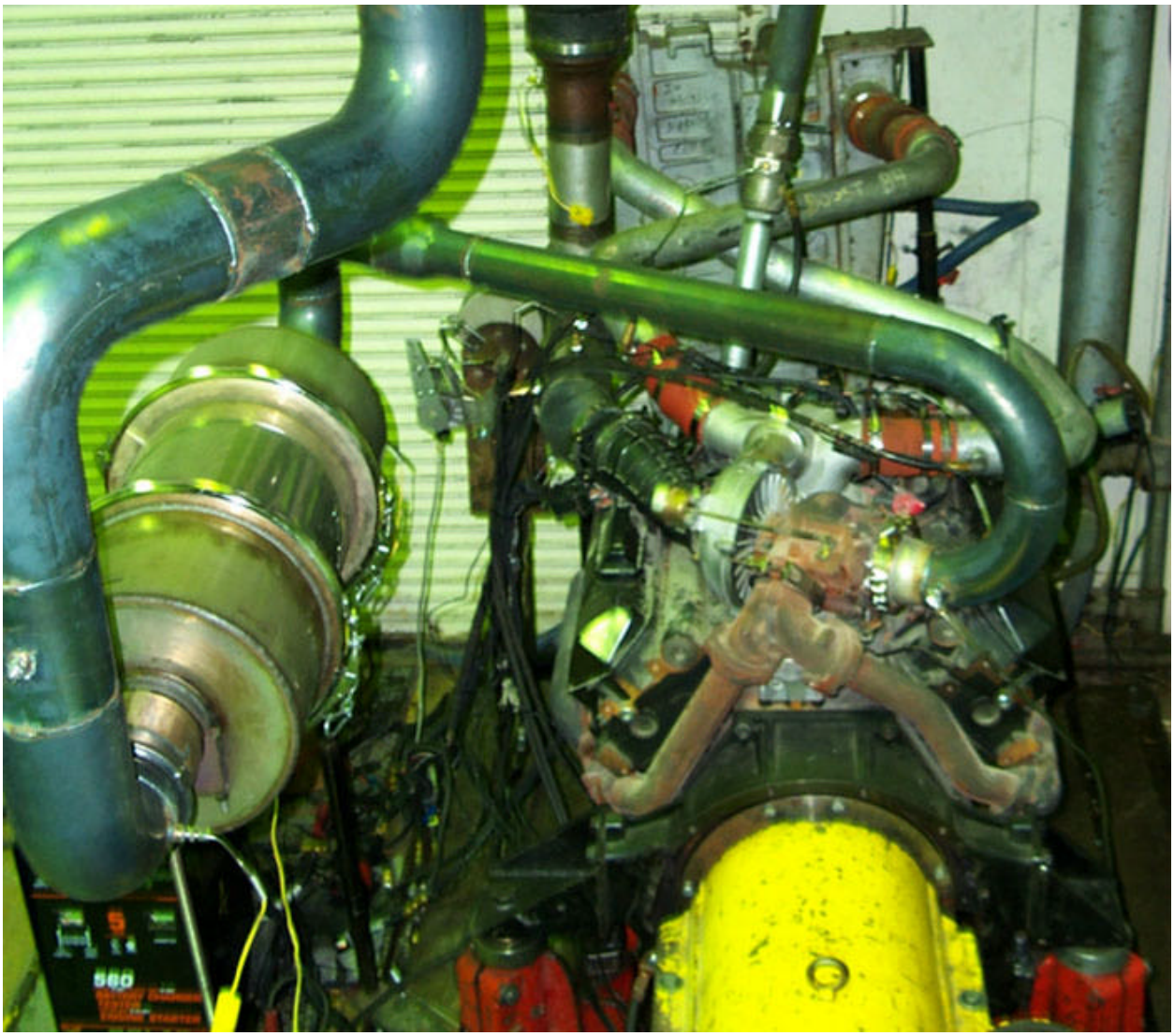

Figure 1. Mounting of Purifilter on the Navistar engine in Test Cell 4

Figure 2. Mounting of Purifilter on the DDC engine in Test Cell 4

Section 3.0
Test Documentation

The ETV testing took place at Southwest Research Institute under contract to the APCTVC. Testing was performed in accordance with:

- *Generic Verification Protocol for Diesel Exhaust Catalysts, Particulate Filters, and Engine Modification Control Technologies for Highway and Nonroad Use Diesel Engines;*[1]
- *Test/QA Plan for the Verification Testing of Diesel Exhaust Catalysts, Particulate Filters, and Engine Modification Control Technologies for Highway and Nonroad Use Diesel Engines;*[8]
- *Test-Specific Addendum to ETV Mobile Source Test/QA Plan for Lubrizol Engine Control Systems precious metal passively regenerating particulate filter;*[2] and
- *Amendment 1 to Test-Specific Addendum to ETV Mobile Source Test/QA Plan for Lubrizol Engine Control Systems precious metal passively regenerating particulate filter*.[3]

The applicant had reviewed the generic verification protocol and had an opportunity to review the test/QA plan prior to testing.

3.1 Engine Description

The ETV testing was performed using two different heavy-duty (HD) on-highway diesel engines. They were a V-configuration, eight-cylinder, 7.3 liter, 1999 model year Navistar International Corporation engine and an inline, four-cylinder, 8.5 liter, 2001 model year Detroit Diesel Corporation (DDC) engine. Both engines were turbocharged and used a laboratory water-to-air heat exchanger for a charge air intercooler.

Lubrizol provided the DDC engine. SwRI owns the Navistar engine. It was shipped to SwRI in 1999 with 100 hours on it and has been used intermittently for audit work, an EPA project, and ETV tests. Table 1 provides the engines' identification details.

Table 1. Engine Identification Information

	Navistar Engine	DDC Engine
Engine serial number	960428	04R0035675
Date of manufacture	February 1999	January 2001
Make	Navistar International Corporation	Detroit Diesel Corporation
Model year	1999	2001
Model	B250 (F-Series)	Series 50 BUS-EGR
Engine displacement and configuration	7.3 L, V-8	8.5 L, I-4
Service class	On-highway, heavy-duty (HD) diesel engine	On-highway, heavy-duty (HD) diesel engine
EPA engine family identification	XNVXHO7.3ANE	1DDXH08.5FJY
Rated power	183kW (244 bhp) at 2,600 rpm	206 kW (275 bhp) at 2,100 rpm
Rated torque	70.1 kg-m (508 lb-ft) at 1,600 rpm	123 kg-m (890 lb-ft) at 1,200 rpm
Certified emission control system	Electronic control	Electronic control

(continued)

Table 1 (continued)

	Navistar Engine	DDC Engine
Aspiration	Turbocharged, air-to-air intercooled	Turbocharged, air-to-air intercooled
Fuel system	Direct injection, electronically controlled unit injectors	Direct injection, electronically controlled unit injectors
Electronic control module software level	Ford # CX3F-12A650-BD	

3.2 Engine Fuel Description

Two different diesel fuels were used during this verification test: a conventional No. 2 low-sulfur diesel (LSD) fuel, with a sulfur level of 429 ppm, during baseline tests on both engines and a No. 2 ULSD fuel, with a sulfur level of 14 ppm, during all control device tests. The LSD fuel meets EPA current diesel fuel specifications given in 40 CFR § 86.1313-98, Table N98-2,[9] and the ULSD fuel meets the 2007 fuel specifications given in Table N07-2[10]. Selected fuel properties from supplier's analyses are summarized for both fuels in Table 2.

Table 2. Selected Fuel Properties and Specifications

Item	Code of Federal Regulations (CFR) Specification[a]		Test Fuel	
	ASTM[b]	Type-2D	LSD EM-4895-F	ULSD EM-4869-F
Cetane number	D613	40–50	48.1	45.6
Cetane index	D976	40–50	48.2	45.9
Distillation range:				
Initial boiling point, ºF (ºC)	D86	340–400 (171–204)	355 (179)	367 (186)
10% Point, ºF (ºC)	D86	400–460 (204–238)	416 (213)	411 (211)
50% Point, ºF (ºC)	D86	470–540 (243–282)	497 (258)	485 (252)
90% Point, ºF (ºC)	D86	560–630 (293–332)	586 (308)	584 (307)
End point, ºF (ºC)	D86	610–690 (321–366)	642 (339)	662 (350)
Gravity (American Petroleum Institute)	D287	32–37	36.7	36.3
Specific gravity		–	0.8411	0.8431
Total sulfur, ppm	D2622	(300–500)[c] (7–15)[d]	429	14
Hydrocarbon composition:				
Aromatics (min.), %	D1319	27	29.3	28.2
Paraffins, naphthenes, and Olefins, %	D1319	[e]	70.7	71.8

(continued)

Table 2 (continued)

Item	Code of Federal Regulations (CFR) Specification[a]		Test Fuel	
	ASTM[b]	Type-2D	"LSD" EM-4895-F	"ULSD" EM-4869-F
Flash point (min.), ºF (ºC)	D93	130 (54)	151 (66)	161 (72)
Viscosity, centistokes at 40 ºC	D445	2.0–3.2	2.3	2.2
Fuel supplier			Chevron Phillips Chemical Co.	

[a] Diesel fuel specification as in 40 CFR 86.1313-98(b)(2)[6] for the year 1998 and beyond and 40 CFR 86.1313-2007(b)(2)[8] for the year 2007 and beyond, for heavy-duty diesel engines.
[b] ASTM = American Society for Testing and Materials.
[c] 1998 sulfur range specification.
[d] 2007 sulfur range specification.
[e] Remainder of the hydrocarbons.

3.3 Summary of Emissions Measurement Procedures

The ETV tests consisted of baseline uncontrolled tests and tests with the control system installed. The baseline engine was tested on conventional LSD fuel. The standard HD Transient Federal Test Procedure[11] (FTP) for exhaust emissions testing was performed. The installed filters were tested with ULSD. The engine and filters were conditioned using ULSD before the official tests with three hot-start transient cycles conducted in accordance with the test/QA plan.[8] Individual exhaust gas and particulate matter (PM) samples were taken for each cycle.

Emissions Test Procedures

Exhaust emissions were measured using HD Transient FTP[11] and the experimental setup shown in Figure 3. Dilute exhaust emissions measured during tests over the transient FTP operating conditions included total hydrocarbons (HC), carbon monoxide (CO), carbon dioxide (CO_2), nitrogen oxides (NO_x), and exhaust PM. The CO and CO_2 levels were determined using nondispersive infrared (NDIR) instruments. Total HC were measured using continuous sampling techniques employing a heated flame ionization detector (HFID). The NO_x was measured continuously using a chemiluminescent analyzer.

The exhaust PM level for each test was determined using dilute sampling techniques that collected PM on a pair of 90-mm diameter Pallflex T60A20 filter media used in series. The particulate filter pair unit was weighed together both before and after each test to establish exhaust PM emissions for the test.

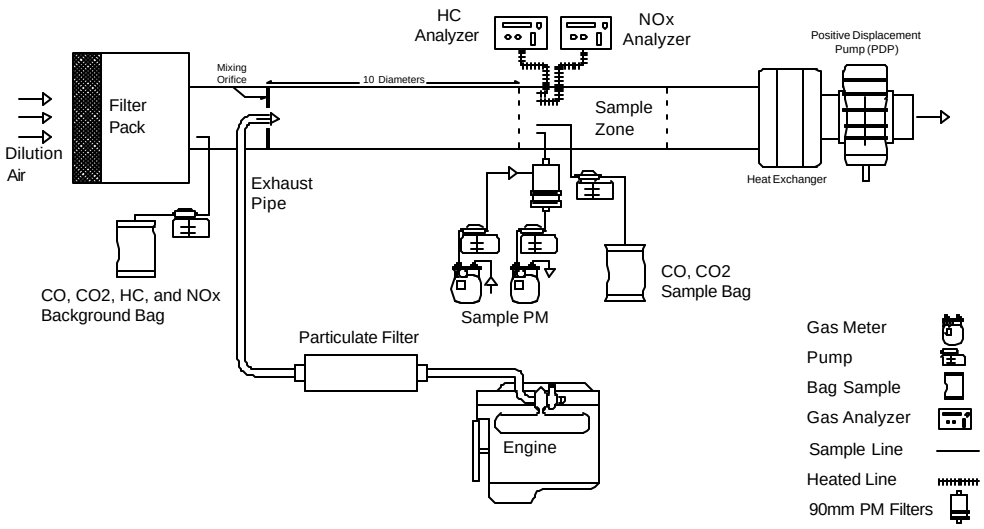

Figure 3. Constant volume sampler setup for emissions measurement.

3.4 Deviations from the Test/QA Plan

Results from the initial baseline tests on the Navistar engine, performed on June 3, 2003, were found to be in error due to an improperly calibrated NO analyzer. The results from this day were voided and were not used for this verification. The analyzer was correctly calibrated, and the baseline tests were rerun the following day.

The 90mm Pallflex PM filter used for the first hot-start FTP test of the aged Purifilter on the DDC engine, on August 13, 2003, was damaged during the post-test weighing process. This test was voided and the data were not used. A hot-start FTP test was run the following day to supplement the aged Purifilter data set.

The data gathered on the DDC engine did not allow quantifying the HC emission reduction. The reduction could not be distinguished from 100 percent with 95 percent confidence. This resulted because the emission levels on both the baseline and controlled tests were very low compared to background HC levels (levels in the dilution air entering the measurement tunnel). HC levels from the baseline test were 1.4 ppm above background on average resulting in higher variance in the baseline results. HC levels for five of the six controlled hot-start tests were negative (i.e., they could not be distinguished from zero). The levels for the cold starts were only 0.2 to 0.3 ppm above background. The data gathered on the Navistar engine did allow calculation of the HC emission reduction. Baseline levels averaged 3 ppm above baseline, and controlled levels were slightly higher than for the DDC engine with a cold-start level 1.5 ppm above background and one of three hot-start values negative.

The test/QA plan[8] contained an error in the model number of the Purifilter. The correct model number (SC17L) is used in the test documentation and in this report.

3.5 Documented Test Conditions

Engine Performance

Tables 3 and 4 give the observed engine performance while power validating the Navistar and DDC engines, respectively, for the baseline and the controlled configurations. For each engine, the performance was very similar for both configurations. Performance curves were generated by operating the engine at full load while increasing its speed by 8 rpm per second for both the baseline and controlled configurations.

Table 3. Engine Performance Data

Fuel	Test Date	Test Number	Test Type	Rated Power[a] bhp (kW)	Peak Torque[b] lb-ft (N-m)
Navistar Engine					
LSD	5/28/2003	PV1	Baseline	239 (178)	495 (671)
ULSD	6/04/2003	PV2	Controlled with Aged Purifilter	245 (183)	489 (663)
DDC Engine					
LSD	8/09/2003	PV1-4895	Baseline	280 (209)	863 (1170)
ULSD	8/11/2003	PV1-4869-D	Controlled with Aged Purifilter	280 (209)	853 (1156)
ULSD	8/12/2003	PV1-4869-D	Controlled with Degreened Purifilter	284 (212)	847 (1148)

[a] Navistar engine power at rated speed of 2,600 rpm; DDC engine power at rated speed of 2,100 rpm.
[b] Navistar engine peak torque at rated speed of 1,600 rpm; DDC engine peak torque at rated speed of 1,200 rpm.

Engine Exhaust Backpressure

The engine backpressure for the Navistar engine was set to 3.6 in Hg (12.2 kPa) in accordance with the engine manufacturer specifications for the baseline configuration. The controlled configuration that included the particulate filter displayed the same backpressure of 3.6 in Hg (12.2 kPa).

The engine backpressure for the DDC engine was set to 3.0 in Hg (10.2 kPa) in accordance with the engine manufacturer specifications for the baseline configuration. Both controlled configurations that included the aged and degreened Purifilter displayed the same backpressure of 3.0 in Hg (10.2 kPa).

Engine Exhaust Temperature

Temperature measurements were made in the exhaust system of the Navistar engine at the inlet and outlet of the Purifilter. The inlet temperature probe was located in the exhaust pipe 1 inch upstream of the inlet subassembly, and the outlet temperature probe was located 3 inches downstream of the outlet subassembly. Typical inlet and outlet temperatures, averaged over the transient test cycle, were 460 ºF (238 ºC) and 476 ºF (247 ºC), respectively.

Temperature measurements were made in the exhaust system of the DDC engine at the inlet and outlet of both degreened and aged Purifilters. The inlet temperature probe was located in the exhaust pipe 3 inches upstream of the inlet subassembly of each Purifilter, and the outlet temperature probe was located 6 inches downstream of the outlet subassembly. Typical inlet temperatures, averaged over the transient test cycle, were 493 ºF (256 ºC) for both Purifilters. The average outlet temperature was 561 ºF (294 ºC) for the degreened Purifilter and 493 ºF (256 ºC) for the aged Purifilter.

Fuel Consumption

Table 4 presents the brake specific fuel consumption (BSFC) for all baseline and control configurations on both engines.

Table 4. Brake Specific Fuel Consumption

Test Number	Test Type	Test Date	BSFC, lb/bhp-hr	BSFC, kg/kW-hr	Weighted BSFC, lb/bhp-hr	Weighted BSFC, kg/kW-hr
Navistar Engine Baseline using LSD fuel						
6-4-03-C1	Cold-start	06/04/03	0.451	0.274		
6-4-03-H1	Hot-start	06/04/03	0.435	0.265	0.437	0.265
6-4-03-H2	Hot-start	06/04/03	0.436	0.265	0.438	0.265
6-4-03-H3	Hot-start	06/04/03	0.434	0.264	0.436	0.264
Navistar Engine with Aged Purifilter using ULSD fuel						
6-5-03-C1	Cold-start	06/05/03	0.451	0.274		
6-5-03-H1	Hot-start	06/05/03	0.445	0.270	0.446	0.270
6-5-03-H2	Hot-start	06/05/03	0.431	0.262	0.434	0.262
6-5-03-H3	Hot-start	06/05/03	0.431	0.262	0.434	0.262
DDC Engine Baseline using LSD fuel						
81103-C1	Cold-start	08/11/03	0.468	0.285		
81103-H1	Hot-start	08/11/03	0.442	0.269	0.446	0.270
81103-H3	Hot-start	08/11/03	0.436	0.265	0.441	0.267
81103-H4	Hot-start	08/11/03	0.433	0.264	0.438	0.265
DDC Engine with Degreened Purifilter using ULSD fuel						
81203-C1	Cold-start	08/12/03	0.459	0.279		
81203-H1	Hot-start	08/12/03	0.439	0.267	0.442	0.267
81203-H2	Hot-start	08/12/03	0.439	0.267	0.442	0.267
81203-H4	Hot-start	08/12/03	0.444	0.270	0.446	0.270
DDC Engine with Aged Purifilter using ULSD fuel						
81303-C1	Cold-start	08/13/03	0.459	0.279		
81303-H2	Hot-start	08/13/03	0.434	0.264	0.438	0.265
81303-H3	Hot-start	08/13/03	0.427	0.260	0.432	0.261
81303-H1	Hot-start	08/13/03	0.431	0.262	0.435	0.263

Section 4.0
Summary and Discussion of Emission Results

The baseline and controlled emissions data are summarized in Tables 5a and 5b. The emissions were measured at each test point for HC, CO, NO_x, and PM. Tables 5a and 5b also provide data on CO_2 emissions and work. For each pollutant, hot-start test combination, the transient composite-weighted emissions per work (bhp-hr) were then calculated following the fractional calculation for highway engines as follows:

$$(E_{COMP})_m = \frac{1/7 \bullet E_{COLD} + 6/7 \bullet (E_{HOT})_m}{1/7 \bullet W_{COLD} + 6/7 \bullet (W_{HOT})_m} \qquad (1)$$

where

E_{COMP} = composite emissions rate, g/bhp-hr
m = 1, 2, or 3 hot-start tests
E_{COLD} = cold-start mass emissions level, g
E_{HOT} = hot-start mass emissions level, g
W_{COLD} = cold-start brake horsepower hour, bhp-hr
W_{HOT} = hot-start brake horsepower hour, bhp-hr.

These composite-weighted emissions rates are shown in Tables 5c and 5d and were used to calculate the mean and standard deviations for the baseline and controlled emissions rates. These data were in turn used to calculate mean emissions reductions and 95 percent confidence limits. These calculations are based on the generic verification protocol[1] and test/QA plan.[8]

The HC data gathered on the DDC engine did not facilitate assigning a mean emission reduction or confidence limits because the HC concentrations on both the baseline and controlled tests were very low compared to background levels (levels in the dilution air entering the measurement tunnel). HC levels on the baseline tests averaged only 1.4 ppm above background concentrations and, for five of the six controlled hot start tests, HC levels were assigned zero values because the sample concentrations were lower than for the background dilution air. The controlled cold start HC sample concentrations were only 0.2 to 0.3 ppm above background levels, which resulted in the weighted emission results being primarily influenced by the cold start tests. Consequently, the low baseline HC results compared to the near zero controlled HC results caused an excessively broad confidence interval for the HC reduction. While the average HC reductions on this engine can be calculated as 90 and 97 percent for the degreened and aged devices, respectively, no reduction is assigned for this engine based on this limited data.

The data gathered on the Navistar engine did facilitate assigning an HC emission reduction. Baseline levels on this engine averaged three ppm above background concentrations. While still low, the controlled HC concentrations were higher than for the DDC engine and were not as influenced by the cold start data. Additionally, the confidence interval for the emissions reduction was significantly narrower for this engine.

Table 6 summarizes the composite weighted emission values and Table 7 the verified emissions reductions and their 95 percent confidence limits.

Table 5a. Emissions Test Data (English units)

Test Number	Test Type	Test Date	g					Work, bhp-hr
			Exhaust PM	NO_X	HC	CO	CO_2	
Navistar Engine Baseline using LSD fuel								
6-4-03-C1	Cold-start	06/04/03	1.61	65.8	2.34	17.5	9.8	15.2
6-4-03-H1	Hot-start	06/04/03	1.43	61.2	2.16	13.3	9.5	15.2
6-4-03-H2	Hot-start	06/04/03	1.38	60.6	2.30	13.3	9.5	15.2
6-4-03-H3	Hot-start	06/04/03	1.39	60.2	2.14	13.2	9.5	15.3
Navistar Engine Controlled with Aged Purifilter using ULSD fuel								
6-5-03-C1	Cold-start	06/05/03	0.13	67.0	1.14	10.4	10.4	16.0
6-5-03-H1	Hot-start	06/05/03	0.09	64.0	0.28	3.20	10.1	15.8
6-5-03-H2	Hot-start	06/05/03	0.07	63.2	0.12	3.18	9.9	16.0
6-5-03-H2	Hot-start	06/05/03	0.07	64.1	0	2.94	9.9	16.0
DDC Engine Baseline using LSD fuel								
81103-C1	Cold-start	08/11/03	1.43	85.6	1.21	19.7	14.5	21.6
81103-H1	Hot-start	08/11/03	1.04	83.4	0.95	12.7	13.8	21.7
81103-H3	Hot-start	08/11/03	1.04	83.9	1.41	12.2	13.7	21.8
81103-H4	Hot-start	08/11/03	1.01	83.2	0.82	12.3	13.6	21.7
DDC Engine Controlled with Degreened Purifilter using ULSD fuel								
81203-C1	Cold-start	08/12/03	0.13	83.2	0.26	7.3	14.3	21.6
81203-H1	Hot-start	08/12/03	0.16	84.0	0	0.7	13.7	21.7
81203-H2	Hot-start	08/12/03	0.14	84.4	0	0.7	13.8	21.7
81203-H4	Hot-start	08/12/03	0.15	81.6	0	0.9	13.9	21.7
DDC Engine Controlled with Aged Purifilter using ULSD fuel								
81303-C1	Cold-start	08/13/03	0.12	82.6	0.34	8.1	14.3	21.6
81303-H2	Hot-start	08/13/03	0.11	85.0	0	1.9	13.6	21.7
81303-H3	Hot-start	08/13/03	0.09	83.3	0.16	2.3	13.4	21.8
81303-H1	Hot-start	08/13/03	0.07	81.9	0.06	1.7	13.6	21.8

Table 5b. Emissions Test Data (metric units)

Test Number	Test Type	Test Date	g					Work, kWh
			Exhaust PM	NO_X	HC	CO	CO2	
Navistar Engine Baseline using LSD fuel								
6-4-03-C1	Cold-start	06/04/03	1.61	65.8	2.34	17.5	9.8	11.4
6-4-03-H1	Hot-start	06/04/03	1.43	61.2	2.16	13.3	9.5	11.4
6-4-03-H2	Hot-start	06/04/03	1.38	60.6	2.30	13.3	9.5	11.4
6-4-03-H3	Hot-start	06/04/03	1.39	60.2	2.14	13.2	9.5	11.5
Navistar Engine Controlled with Aged Purifilter using ULSD fuel								
6-5-03-C1	Cold-start	06/05/03	0.13	67.0	1.14	10.4	10.4	12.0
6-5-03-H1	Hot-start	06/05/03	0.09	64.0	0.28	3.20	10.1	11.9
6-5-03-H2	Hot-start	06/05/03	0.07	63.2	0.12	3.18	9.9	12.0
6-5-03-H2	Hot-start	06/05/03	0.07	64.1	0	2.94	9.9	12.0
DDC Engine Baseline using LSD fuel								
81103-C1	Cold-start	08/11/03	1.43	85.6	1.21	19.7	14.5	16.2
81103-H1	Hot-start	08/11/03	1.04	83.4	0.95	12.7	13.8	16.3
81103-H3	Hot-start	08/11/03	1.04	83.9	1.41	12.2	13.7	16.4
81103-H4	Hot-start	08/11/03	1.01	83.2	0.82	12.3	13.6	16.3
DDC Engine Controlled with Degreened Purifilter using ULSD fuel								
81203-C1	Cold-start	08/12/03	0.13	83.2	0.26	7.3	14.3	16.2
81203-H1	Hot-start	08/12/03	0.16	84.0	0	0.7	13.7	16.3
81203-H2	Hot-start	08/12/03	0.14	84.4	0	0.7	13.8	16.3
81203-H4	Hot-start	08/12/03	0.15	81.6	0	0.9	13.9	16.3
DDC Engine Controlled with Aged Purifilter using ULSD fuel								
81303-C1	Cold-start	08/13/03	0.12	82.6	0.34	8.1	14.3	16.2
81303-H2	Hot-start	08/13/03	0.11	85.0	0	1.9	13.6	16.3
81303-H3	Hot-start	08/13/03	0.09	83.3	0.16	2.3	13.4	16.4
81303-H1	Hot-start	08/13/03	0.07	81.9	0.06	1.7	13.6	16.4

Table 5c. Composite Weighted Emissions Values (English units)

Test Number	Test Type	Test Date	g/bhp-hr				
			Exhaust PM	NO_X	HC	CO	CO_2
Navistar Engine Baseline using LSD fuel							
6-4-03-H1	Hot-start	06/04/03	0.0957	4.08	0.144	0.916	628
6-4-03-H2	Hot-start	06/04/03	0.0928	4.04	0.152	0.918	630
6-4-03-H3	Hot-start	06/04/03	0.0931	4.00	0.142	0.905	627
Navistar Engine Controlled with Aged Purifilter using ULSD fuel							
6-5-03-H1	Hot-start	06/05/03	0.0059	4.07	0.025	0.267	642
6-5-03-H2	Hot-start	06/05/03	0.0047	4.00	0.016	0.264	625
6-5-03-H2	Hot-start	06/05/03	0.0045	4.04	0.010	0.251	625
DDC Engine Baseline using LSD fuel							
81103-H1	Hot-start	08/11/03	0.0506	3.86	0.046	0.631	641
81103-H3	Hot-start	08/11/03	0.0502	3.87	0.064	0.609	634
81103-H4	Hot-start	08/11/03	0.0491	3.85	0.040	0.615	630
DDC Engine Controlled with Degreened Purifilter using ULSD fuel							
81203-H1	Hot-start	08/12/03	0.0070	3.87	0.002	0.074	637
81203-H2	Hot-start	08/12/03	0.0064	3.88	0.002	0.074	638
81203-H4	Hot-start	08/12/03	0.0069	3.78	0.002	0.085	643
DDC Engine Controlled with Aged Purifilter using ULSD fuel							
81303-H2	Hot-start	08/13/03	0.0050	3.90	0.002	0.127	632
81303-H3	Hot-start	08/13/03	0.0043	3.82	0.009	0.142	622
81303-H1	Hot-start	08/13/03	0.0036	3.76	0.004	0.122	627

Table 5d. Composite Weighted Emissions Values (metric units)

Test Number	Test Type	Test Date	g/kWh				
			Exhaust PM	NO_X	HC	CO	CO_2
Navistar Engine Baseline using LSD fuel							
6-4-03-H1	Hot-start	06/04/03	0.128	5.44	0.192	1.22	837
6-4-03-H2	Hot-start	06/04/03	0.124	5.39	0.203	1.22	840
6-4-03-H3	Hot-start	06/04/03	0.124	5.33	0.189	1.21	836
Navistar Engine Controlled with Aged Purifilter using ULSD fuel							
6-5-03-H1	Hot-start	06/05/03	0.0079	5.43	0.033	0.356	856
6-5-03-H2	Hot-start	06/05/03	0.0063	5.33	0.021	0.352	833
6-5-03-H2	Hot-start	06/05/03	0.0060	5.39	0.013	0.335	833
DDC Engine Baseline using LSD fuel							
81103-H1	Hot-start	08/11/03	0.0675	5.15	0.061	0.841	855
81103-H3	Hot-start	08/11/03	0.0669	5.16	0.085	0.812	845
81103-H4	Hot-start	08/11/03	0.0655	5.13	0.053	0.820	840
DDC Engine Controlled with Degreened Purifilter using ULSD fuel							
81203-H1	Hot-start	08/12/03	0.0093	5.16	0.003	0.099	849
81203-H2	Hot-start	08/12/03	0.0085	5.17	0.003	0.099	851
81203-H4	Hot-start	08/12/03	0.0092	5.04	0.003	0.113	857
DDC Engine Controlled with Aged Purifilter using ULSD fuel							
81303-H2	Hot-start	08/13/03	0.0067	5.20	0.003	0.169	843
81303-H3	Hot-start	08/13/03	0.0057	5.09	0.012	0.189	829
81303-H1	Hot-start	08/13/03	0.0048	5.01	0.005	0.163	836

Table 6. Summary of Verification Test Emission Values

Test Engine	Device type	Fuel	Mean Composite Weighted Emission Value, g/bhp-hr (g/kWh)				
			PM	NOx	HC	CO	CO2
Navistar	Baseline	LSD	0.0939 (0.125)	4.04 (5.39)	0.146 (0.195)	0.913 (1.22)	628 (837)
Navistar	Aged	ULSD	0.0050 (0.0067)	4.03 (5.37)	0.017 (0.023)	0.261 (0.348)	631 (841)
DDC	Baseline	LSD	0.0500 (0.0667)	3.86 (5.15)	0.0498 (0.0664)	0.618 (0.824)	635 (847)
DDC	Degreened	ULSD	0.0068 (0.0091)	3.84 (5.12)	0.0017 (0.0023)	0.078 (0.104)	639 (852)
DDC	Aged	ULSD	0.0043 (0.0057)	3.82 (5.09)	0.0051 (0.0068)	0.130 (0.173)	627 (836)

Table 7. Summary of Verification Test Emission Reductions

Test Engine	Device type	Fuel		Mean Emissions Reduction (%)				95% Confidence Limits on the Emissions Reduction (%)			
		Baseline	Controlled	PM[c]	NOx	HC	CO	PM[c]	NOx	HC	CO
Navistar	Aged	LSD	ULSD	95	[a]	88	71	91-99	[a]	79-97	70-73
DDC	Degreened	LSD	ULSD	86	[a]	[b]	87	83-90	[a]	[b]	83-92
DDC	Aged	LSD	ULSD	91	[a]	[b]	79	88-95	[a]	[b]	74-84

[a] The emissions reduction could not be distinguished from zero with 95% confidence.
[b] The emissions reduction could not be quantified or distinguished from 100% with 95% confidence.
[c] The verified PM emissions reduction combines reductions related to the control technology and the change in fuel sulfur level.

4.1 Quality Assurance

The environmental technology verification of the Lubrizol Engine Control Systems Purifilter SC17L for heavy-duty diesel engines was performed in accordance with the test/QA plan.[8] An audit of data quality included the review of equipment, personnel qualifications, procedures, record keeping, data validation, analysis, and reporting. Preliminary, in-process, and final inspections, and a review of 10 percent of the data showed that the requirements stipulated in the test/QA plan[8] were achieved. The APCTVC's quality manager reviewed the test results and the quality control data and concluded that the data quality objectives given in the generic verification protocol were attained. EPA and RTI quality assurance staff conducted audits of SwRI's technical and quality systems in April 2002 and found no deficiencies that would adversely impact the quality of results. The equipment was appropriate for the verification testing, and it was operating satisfactorily. SwRI's technical staff were well qualified to perform the testing and conducted themselves in a professional manner.

Section 5.0
References

1. Research Triangle Institute. Generic Verification Protocol for Diesel Exhaust Catalysts, Particulate Filters, and Engine Modification Control Technologies for Highway and Nonroad Use Diesel Engines. Research Triangle Park, NC, January 2002.

2. Research Triangle Institute. Test-Specific Addendum to ETV Mobile Source Test/QA Plan for Lubrizol Engine Control Systems precious metal passively regenerating particulate filter. Research Triangle Park, NC, December 2003.

3. Research Triangle Institute. Amendment 1 to Test-Specific Addendum to ETV Mobile Source Test/QA Plan for Lubrizol Engine Control Systems precious metal passively regenerating particulate filter. Research Triangle Park, NC, December 2003.

4. Southwest Research Institute. Environmental Technology Verification of a Precious Metal Passively Regenerating Particulate Filter for Heavy-Duty Diesel Engines. San Antonio, TX, July 2003.

5. Southwest Research Institute. Environmental Technology Verification of Lubrizol Purifilter SC17L Precious Metal Passively Regenerating Particulate Filter for Heavy-Duty Diesel Engines. San Antonio, TX, October 2003.

6. Southwest Research Institute. Audit of Data Quality for Environmental Technology Verification of a Precious Metal Passively Regenerating Particulate Filter for Heavy-Duty Diesel Engines. San Antonio, TX, June 2003.

7. Southwest Research Institute. Audit of Data Quality for Environmental Technology Verification of Lubrizol Purifilter SC17L Precious Metal Passively Regenerating Particulate Filter for Heavy-Duty Diesel Engines. San Antonio, TX, October 2003.

8. Research Triangle Institute. Test/QA Plan for the Verification Testing of Diesel Exhaust Catalysts, Particulate Filters, and Engine Modification Control Technologies for Highway and Nonroad Use Diesel Engines. Research Triangle Park, NC, April 2002.

9. Fuel specifications, 40 CFR § 86.1313-98, Table N98-2 (updated July 2001).

10. Fuel specifications, 40 CFR § 86.1313-2007, Table N07-2 (updated January 2001).

11. 40 CFR § 86, Subpart N, as of July 1, 1999, http://www.epa.gov/epahome/cfr40.htm.