VR-P2MF-01-02
September 2001

Environmental Technology Verification Report

Evaluation of USFilter Corporation's RETEC® Model SCP-6 Separated Cell Purification System for Chromic Acid Anodize Bath Solution

Prepared by

CTC Concurrent Technologies Corporation

Under a Cooperative Agreement with

EPA **U.S. Environmental Protection Agency**

ETV ETV ETV

NOTICE

This publication was developed under Cooperative Agreement No. CR826492-01-0 awarded by the U.S. Environmental Protection Agency. The Agency reviewed this document. The Agency made comments and suggestions on the document intended to improve the scientific analysis and technical accuracy of the statements contained in the document. Concurrent Technologies Corporation (*CTC*) accommodated EPA's comments and suggestions. However, the views expressed in this document are those of Concurrent Technologies Corporation and EPA does not endorse any products or commercial services mentioned in this publication. The document will be maintained by Concurrent Technologies Corporation in accordance with the Environmental Technology Verification Program Metal Finishing Technologies Quality Management Plan. Document control elements include unique issue numbers, document identification, numbered pages, document distribution records, tracking of revisions, a document MASTER filing and retrieval system, and a document archiving system.

VR-P2MF-01-02
September 2001

Environmental Technology Verification Report

Evaluation of USFilter Corporation's RETEC$^{\grave{O}}$ Model SCP-6 Separated Cell Purification System for Chromic Acid Anodize Bath Solution

Prepared by

Project Manager
Chris Start
Michigan Manufacturing Technology Center
Plymouth, MI 48170

Program Manager
Donn Brown
Concurrent Technologies Corporation
Largo, FL 33773

EPA Center Manager
Alva Daniels
National Risk Management Research Laboratory
Cincinnati, Ohio 45628

FOREWORD

The Environmental Technology Verification (ETV) Program has been established by the U.S. Environmental Protection Agency (EPA) to evaluate the performance characteristics of innovative environmental technologies for any media and to report this objective information to the states, local governments, buyers, and users of environmental technology. EPA's Office of Research and Development (ORD) has established a five-year pilot program to evaluate alternative operating parameters and to determine the overall feasibility of a technology verification program. ETV began in October 1995 and was evaluated through September 2000. EPA is preparing a report to Congress containing results of the pilot program and recommendations for its future operation.

EPA's ETV Program, through the National Risk Management Research Laboratory (NRMRL), has partnered with *CTC* under the Environmental Technology Verification Program P2 Metal Finishing Technologies Center (ETV-MF). The ETV-MF Center, in association with the EPA's Metal Finishing Strategic Goals Program, was initiated to identify promising and innovative metal finishing pollution prevention technologies through EPA-supported performance verifications. The following report describes the verification of the performance of the USFilter Corporation's RETEC® Model SCP-6 Separated Cell Purification System for chromic acid anodize bath solution in the metal finishing industry.

ACRONYM and ABBREVIATION LIST

°C	Degrees Celsius
ACGIH	American Conference of Government Industrial Hygienists
Ah	Amp-hours
CARB	California Air Resources Board
CTC	Concurrent Technologies Corporation
DVI	DV Industries, Inc.
dynes/cm	Dynes per Centimeter
EFF	Effluent
EPA	U.S. Environmental Protection Agency
ETV	Environmental Technology Verification
ETV-MF	Environmental Technology Verification Program P2 Metal Finishing Technologies
gal	Gallon
gpm	Gallon per Minute
g/L	Gram per Liter
HDPE	High Density Polyethylene
HP	Horsepower
hrs/wk	Hours per Week
ICP-AES	Inductively Coupled Plasma – Atomic Emission Spectrometry
IDL	Instrument Detection Limit
IN	Influent
kWh	Kilowatt-hour
lb.(s)	Pound(s)
LCS	Laboratory Control Sample
L	Liters
MDL	Method Detection Limit
min	Minute
mL	Milliliter(s)
mm	Millimeters
MMTC	Michigan Manufacturing Technology Center
MSDS	Material Safety Data Sheet
NIOSH	National Institute of Occupational Safety and Health
NRMRL	National Risk Management Research Laboratory
O&M	Operating and Maintenance
ORD	Office of Research and Development
OSHA	Occupational Safety and Health Administration
P2	Pollution Prevention
PEL	Permissible Exposure Limit
QA	Quality Assurance
QA/QC	Quality Assurance/Quality Control
QMP	Quality Management Plan
RPD	Relative Percent Difference
SCP	Separated Cell Purification
SP	Sample Point

ACRONYM and ABBREVIATION LIST (continued)

SR	Sample Result
SSR	Spiked Sample Result
TLV	Threshold Limit Value
TSA	Technical Systems Audit
VDC	Voltage (DC)

ACKNOWLEDGEMENTS

This is to acknowledge Jim Totter and Valerie Whitman of *CTC* for their help in preparing this document. *CTC* also acknowledges the support of all those who helped plan and implement the verification activities and prepare this report. In particular, a special thanks to Alva Daniels, EPA ETV Center Manager, and Lauren Drees, EPA Quality Assurance Manager. *CTC* also expresses sincere gratitude to USFilter, the manufacturer of the RETEC® Model SCP-6 Separated Cell Purification System, for their participation in and support of this program, and their ongoing commitment to improve metal finishing operations. In particular, *CTC* thanks Mike Chan, Vice President of USFilter. *CTC* also thanks DV Industries, Inc. of Lynwood, California, for the use of their facilities and materials, and the extensive contributions of Tom Davis and Scott Smith for the performance of this verification test.

THE ENVIRONMENTAL TECHNOLOGY VERIFICATION PROGRAM

U.S. Environmental Protection Agency

Concurrent Technologies Corporation

ETV VERIFICATION STATEMENT

TECHNOLOGY TYPE:	**ELECTRODIALYSIS**		
APPLICATION:	**CHROMIC ACID ANODIZE BATH MAINTENANCE**		
TECHNOLOGY NAME:	**RETEC® Model SCP-6 Separated Cell Purification System**		
COMPANY:	**USFilter Corporation**		
POC:	**David Hill**		
ADDRESS:	**28 Cook Street** **Billerica, MA 01821**	**PHONE:** **FAX:**	**(978) 262-2313** **(978) 667-1731**
E-MAIL:	**hilld@usfilter.com**		

The United States Environmental Protection Agency (EPA) has created the Environmental Technology Verification (ETV) Program to facilitate the deployment of innovative or improved environmental technologies through performance verification and dissemination of information. The goal of the ETV Program is to further environmental protection by substantially accelerating the acceptance and use of improved, cost-effective technologies. ETV seeks to achieve this goal by providing high-quality, peer-reviewed data on technology performance to those involved in the design, distribution, financing, permitting, purchase, and use of environmental technologies.

ETV works in partnership with recognized standards and testing organizations, stakeholder groups consisting of buyers, vendor organizations, and states, with the full participation of individual technology developers. The program evaluates the performance of innovative technologies by developing test plans that are responsive to the needs of stakeholders, conducting field or laboratory tests (as appropriate), collecting and analyzing data, and preparing peer-reviewed reports. All evaluations are conducted in accordance with rigorous quality assurance protocols to ensure that data of known and adequate quality are generated and that the results are defensible.

The ETV P2 Metal Finishing Technologies (ETV-MF) Program, one of 12 technology focus areas under the ETV Program, is operated by Concurrent Technologies Corporation, in cooperation with EPA's National Risk Management Research Laboratory. The ETV-MF Program has evaluated the performance of an electrodialysis technology for the purification of chromic acid anodize bath solution. This verification statement provides a summary of the test results for the USFilter RETEC® Model SCP-6 Separated Cell Purification System.

VERIFICATION TEST DESCRIPTION

The USFilter RETEC® Model SCP-6 (RETEC® unit) was tested, under actual production conditions, on a chromic acid anodize bath solution, at DV Industries, Inc. (DVI) in Lynwood, California. Chromic acid anodizing is performed on various aluminum parts in one of two independent parts processing tanks: a 27-foot or a 62-foot tank. The verification test evaluated the ability of the RETEC® unit to purify the chromic acid anodize bath solution of process contaminants in the 27-foot chromic anodizing tank.

Testing was conducted during two distinct 5-week test periods (Baseline and Operational Modes):

- During the first test period (Baseline Mode), the RETEC® unit was turned off, and the chromic acid anodizing bath was monitored to determine the buildup rate of process contaminants. Aluminum parts were anodized at typical processing rates for DVI.
- During the second test period (Operational Mode), the RETEC® unit was turned on, and the chromic acid anodizing bath was monitored to determine the rate of process contaminant removal. Again, aluminum parts were anodized at typical processing rates for DVI.

Historical operating and maintenance labor requirements, chemical usage, and waste generation data were collected to perform the cost analysis.

TECHNOLOGY DESCRIPTION

The RETEC® Model SCP-6 Separated Cell Purification System purifies and reconditions spent chromic acid anodizing solution by circulating it through a specialized electrochemical cell. Anodizing solution is recirculated between the anolyte section of the RETEC® cell and the anodizing process tank. During this process, trivalent chromium in the anodizing solution is oxidized to hexavalent chromium, and metal cations are transported to the catholyte solution through a porous, polymeric membrane separating the anolyte and catholyte compartments of the cell. The treated process solution is then returned to the anodizing bath. The metal contaminants removed from the process solution are kept in solution in the catholyte side of the cell until the solution becomes saturated with contaminants. At DVI, the RETEC® saturated catholyte waste (100 gallons) is disposed of about four times a year.

VERIFICATION OF PERFORMANCE

In the Baseline Mode, six weekly grab samples were collected over a five-week period from the anodizing tank and analyzed to determine the buildup rate of process contaminants. In addition, weekly grab samples from the rinse tanks upstream and downstream of the anodizing tank were collected and analyzed for mass balance purposes related to the anodizing tank. Rinse tank analyses showed dragout to be insignificant.

In the Operational Mode, five weekly grab samples were collected over a six-week period from the anolyte and catholyte sections of the RETEC® unit. All samples were analyzed for process contaminants in order to perform a mass balance and determine the removal efficiencies of process contaminants from the anodized bath solution.

Eleven weeks after the RETEC® unit was turned on (16 weeks after test started), samples were again collected from the RETEC® unit. These samples are designated as "1Q" in **Table i**, and represent the chemical characteristics of the anolyte and catholyte at the end of the first quarter of the catholyte operating cycle, 11 weeks after the RETEC® system was turned on.

Average analytical results for key parameters are shown in **Table i.** Hexavalent chromium is the primary active ion in the chromic anodizing process. Trivalent chromium is the natural occurring reduced state of hexavalent chromium. The reduction from hexavalent chromium to trivalent chromium occurs in the anodizing bath over a period of time, and can be accelerated by temperature and pH changes, and chemical and electrochemical reactions. Aluminum and magnesium are the primary anodizing bath contaminants. A small amount of aluminum (0.39 g/L) is required for the aluminum anodizing process to occur. After six weeks of RETEC®

operation, the purified chromic acid anodized solution maintained a relatively steady chemical and contaminant composition similar to the anodizing solution at the time of RETEC® start-up. The buildup of process contaminants in the anodizing solution was slowed, while the contaminant level in the catholyte increased dramatically, showing a contamination transfer across the polymeric membrane.

Sampling Week	Hexavalent Chromium (by titration) g/L Anolyte / Catholyte	Trivalent Chromium (by titration) g/L Anolyte / Catholyte	Total Chromium (by ICP-AES) g/L Anolyte / Catholyte	Total Aluminum (by ICP-AES) g/L Anolyte / Catholyte	Total Magnesium (by ICP-AES) g/L Anolyte / Catholyte
0 - Baseline	48.0/NA	<1.1/NA	49.0/NA	3.6/NA	0.27/NA
1 - Baseline	48.0/NA	<1.1/NA	46.0/NA	3.7/NA	0.31/NA
2 - Baseline	48.1/NA	<1.1/NA	42.0/NA	3.8/NA	0.25/NA
3 - Baseline	47.5/NA	<1.1/NA	43.0/NA	4.0/NA	0.26/NA
4 - Baseline	50.5/NA	<1.1/NA	50.0/NA	4.5/NA	0.32/NA
5 - Baseline	51.5/20.6	<1.1/<1.1	46.0/18.0	4.5/0.1	0.32/0.09
6 - Operational	52.6/21.3	<1.1/<1.1	44.0/20.0	4.1/2.0	0.29/0.12
7 - Operational	52.9/22.5	<1.1/<1.1	44.0/21.0	4.1/3.2	0.22/0.15
8 - Operational	53.5/36.1	<1.1/<1.1	48.0/34.0	4.6/3.8	0.24/0.20
9 - Operational	53.8/41.5	<1.1/1.7	46.0/42.0	4.4/5.4	0.21/0.25
10 - Operational	Thanksgiving holiday – no samples collected this week				
11 - Operational	52.7/51.6	<1.1/<1.1	50.0/48.0	4.9/6.4	0.24/0.28
16 - 1Q	NA	NA	52.5/50.5	5.4/7.5	0.26/0.31

Titration = Standard sodium thiosulfate titration, 1999 Metal Finishing Guidebook, Vol. 97, No. 1, Control, Analysis, and Testing Section – Chemical Analysis of Plating Solutions, Charles Rosenstein and Stanley Hirsch, Table VIII – Test Methods for Electroplating Solutions, page 538.
ICP-AES = Inductively Coupled Plasma-Atomic Emission Spectrometry (EPA SW-846 Method 6010B)
NA = Not Applicable

Table i. Summary of Key Analytical Data

Oxidation of Trivalent Chromium to Hexavalent Chromium. The oxidation of trivalent chromium to hexavalent chromium in the anolyte and the transfer of hexavalent chromium across the polymeric membrane from the catholyte to the anolyte by the RETEC® unit is marketed as one of the beneficial conversions performed by the electrochemical process. However, as can be seen in **Table i**, trivalent chromium levels were never above background levels in the anolyte; therefore, there was no quantifiable oxidation to hexavalent chromium. A slight increase in hexavalent chromium levels in the anolyte was observed, but since DVI adds chromic acid to the anodizing bath on a regular basis, this increase in hexavalent chromium concentration can not be definitively attributed to the RETEC® electrolytic reaction. Hexavalent chromium levels measured by titration that are higher than total chromium levels measured by ICP-AES are due to uncertainties inherent in the precision of these two different analytical methods.

Contaminant Removal. Removal of the primary contaminants of the chromic acid anodize bath solution, aluminum and magnesium, are shown in **Table ii**. For the Baseline Mode, the average aluminum increase in the anolyte was 0.180 g/L per week. The average magnesium increase in the anolyte was 0.010 g/L per week. During the Operational Mode, aluminum and magnesium levels in the anolyte remained relatively stable, while the catholyte showed an overall increase of 6.32 g/l of aluminum. The total volume of catholyte solution at the end of the verification test was 392 gallons (150 gallons in the clarifier + 30 gallons in the RETEC® cell and piping + 212 total gallons of catholyte overflow collected during the test). Multiplying the aluminum contamination increase in the catholyte by the total catholyte volume gives an overall removal of 9,378 grams of aluminum from the anolyte solution over the six week test period (6.32 g/l x 392 gallons x 3.7854 liters/gallon =

9,378 grams). The increase in magnesium contamination of the catholyte was less pronounced, showing an overall increase of 0.19 g/l. Multiplying the magnesium contamination increase in the catholyte by the total catholyte volume gives an overall removal of 282 grams of magnesium from the anolyte solution over the six week test period (0.19 g/l x 392 gallons x 3.7854 liters/gallon = 282 grams). The RETEC® unit proved to be an adequate technology for removing aluminum contamination from the chromic acid anodize solution at DVI; however, the unit was not able to completely arrest the contamination rise in the anodizing bath. Since the six-cell model installed at DVI is the smallest RETEC® unit made by USFilter, it is possible that a larger unit may solve this problem. However, since the RETEC® unit was turned on when the anodizing bath was within 1.6 g/L of its upper limit for aluminum, the purification system was unable to prevent the anodizing bath from reaching the upper contamination limit triggering disposal of the anodizing bath. It can be concluded that the RETEC® system extended the anodizing bath life by slowing the contamination build-up rate, but due to the relatively short verification test period, the length of this extension could not be determined.

Anolyte		**Start (g/L)**	**End (g/L)**	**Change (g/L)**	**Average Weekly Increase (g/L)**
Aluminum	Baseline Mode	3.6	4.5	+0.9	+0.180
	Operational Mode	4.5	4.9	+0.4	+0.067
Magnesium	Baseline Mode	0.27	0.32	+0.05	+0.010
	Operational Mode	0.32	0.24	-0.08	-0.0133
Catholyte					
Aluminum	Operational Mode	0.085	6.40	+6.32	+1.053
Magnesium	Operational Mode	0.087	0.28	+0.19	+0.0317

Table ii. Contaminant Removal

Energy Use. Energy requirements for operating the RETEC® unit at DVI include electricity for the anolyte and catholyte pumps and the system rectifier. Electricity use was determined to be 6,366 kWh/day, based on continuous operation of the system.

Waste Generation. A waste generation analysis was performed using operational data collected during the verification test period, and historical records from DVI. Waste generation data normalized to the amount of work processed over the verification test period showed an anodizing bath waste generation reduction of about 54 percent when the RETEC® system was in use. Implementation of the RETEC® Model SCP-6 extended the life of the anodizing bath, thus generating less chromic acid waste. However, some of this waste reduction is offset by chromic acid waste generated by the RETEC® system. The net reduction of concentrated waste generated from the chromic acid anodizing process when the purification system was in use is thus reduced to 46 percent.

Hexavalent Chromium Air Emissions. Air emissions from the DVI anodizing bath/RETEC unit were tested for hexavalent chromium. The aim of this testing was to check to see if the RETEC unit contributed to the concentration of airborne hexavalent chromium in the DVI facility. Air monitoring was conducted in both the Baseline and Operational phases of the verification test. The RETEC system exhibited a slight increase in the overall hexavalent chromium air emissions to the DVI facility. Air monitoring results indicated an average process hexavalent chromium emission increase of 0.124 µg/m3. Personal monitoring during the verification test was performed; however, the samples became contaminated with hexavalent chromium from routine paint filter change-out maintenance operations, so the results had to be discarded. Process emission readings during the operational phase of the RETEC® verification test were well within all applicable regulatory and suggested exposure limits.

Operating and Maintenance Labor. Operating and maintenance (O&M) labor requirements for the RETEC® Model SCP-6 were monitored during testing. The O&M labor requirements for the equipment were observed to be 2.8 hrs/wk. Accounting for savings in reduced labor associated with anodizing bath chemical additions, the RETEC® system O&M labor averages about 135 labor hours per year. O&M tasks performed during the

verification test included daily inspections of the unit, recording of system parameters, and additions of chromic acid flakes to the clarifier to maintain the catholyte pH below 2.

Cost Analysis. A cost analysis of the RETEC® Model SCP-6 was performed using current operating costs and historical records from DVI. The installed capital cost (1993) of the unit was $35,230 (includes $33,630 for the system and $1,600 for installation costs). The annual cost savings associated with the unit is $8,288. The projected payback period is 4.2 years.

SUMMARY

The test results show that the RETEC® Model SCP-6 does provide an environmental benefit by extending the bath life of the chromic acid anodize solution, thereby reducing the amount of liquid wastes produced by the anodizing operation without removing the required anodizing constituents of the bath. The economic benefit associated with this technology is primarily in reduced waste disposal costs associated with the life extension of the anodizing bath. Process emission increases of hexavalent chromium during the operation of the RETEC® unit are negligible. As with any technology selection, the end user must select appropriate bath maintenance equipment and chemistry for a process that can meet their associated environmental restrictions, productivity, and anodizing requirements.

Original signed by:
E. Timothy Oppelt

E. Timothy Oppelt
Director
National Risk Management Research Laboratory
Office of Research and Development
U.S. Environmental Protection Agency

Original signed by:
Donn Brown

Donn W. Brown
Manager
P2 Metal Finishing Technologies Program
Concurrent Technologies Corporation

NOTICE: EPA verifications are based on evaluations of technology performance under specific, predetermined criteria and appropriate quality assurance procedures. EPA and *CTC* make no expressed or implied warranties as to the performance of the technology and do not certify that a technology will always operate as verified. The end user is solely responsible for complying with any and all applicable federal, state, and local requirements. Mention of commercial product names does not imply endorsement.

TABLE OF CONTENTS

1.0 INTRODUCTION 1

2.0 DESCRIPTION OF CHROMIC ACID ANODIZE BATH SOLUTION PURIFICATION SYSTEM 1

2.1 Anodize Bath Purification Equipment 1

2.2 Test Site Installation 3

2.3 Operating Flow 4

3.0 METHODS AND PROCEDURES 6

3.1 Test Objectives 6

3.2 Test Procedure 8

3.2.1 System Set-Up 8

3.2.2 Testing 8

3.3 Quality Assurance/Quality Control 8

3.3.1 Data Entry 8

3.3.2 Sample Collection and Handling 9

3.3.3 Calculation of Data Quality Indicators 9

3.3.3.1 Precision 9

3.3.3.2 Accuracy 10

3.3.3.3 Completeness 10

3.3.3.4 Comparability 10

3.3.3.5 Representativeness 11

3.3.3.6 Sensitivity 11

4.0 VERIFICATION DATA 12

4.1 Analytical Results 12

4.2 Process Measurements 13

4.3 Production Data 15

4.4 Other Data 16

4.5 Hexavalent Chromium Air Monitoring 16

5.0 EVALUATION OF RESULTS 16

5.1 Oxidation of Trivalent Chromium to Hexavalent Chromium 16

5.2 Contaminant Removal 17
5.3 Mass Balance 18
5.4 Hexavalent Chromium Air Monitoring Results 19
5.5 Energy Use 20
5.6 Operating and Maintenance Labor Analysis 21
5.7 Chemical Use Analysis 22
5.8 Waste Generation Analysis 23
5.9 Cost Analysis 24
5.10 Project Responsibilities/Audits 25
6.0 REFERENCES 26

LIST OF FIGURES

Figure 1. RETEC® Chromic Acid Anodize Bath Solution Purification at DVI, Inc. 2
Figure 2. RETEC® SCP-6 System 3
Figure 3. RETEC Chromium Purification Cell Reactions 5

LIST OF TABLES

Table 1. Test Objectives and Related Test Measurements Conducted During the 7
Verification of the USFilter RETEC® Model SCP-6 7
Table 2. Laboratory Methodology Information 12
Table 3. Summary of Analytical Results (RETEC® & Bath) 13
Table 4. Summary of Process Measurements 14
Table 5. DVI Production (Ah required for anodizing) 15
Table 6. Other Data Collected During Verification 16
Table 7. Contaminant Removal 17
Table 8. Summary of Analytical Results (Rinse & Flake) 19
Table 9. Air Monitoring Results – Baseline Phase 20
Table 10. Air Monitoring Results – Operational Phase 20
Table 11. RETEC® System Rectifier Electrical Requirements 21

Table 12. Results of Waste Generation Analysis 23
Table 13. Annual Costs/Savings 25

LIST OF APPENDICES

APPENDIX A: Precision Calculations…….A-1
APPENDIX B: Accuracy Calculations…….B-1
APPENDIX C: Representativeness Calculations……..C-1

1.0 INTRODUCTION

The RETEC® Model SCP-6 (RETEC® unit) is an electrochemical purification system for recycling spent chromic acid anodized bath solution. Chromic acid anodizing is performed on various aluminum parts in one of two independent parts processing lines: a 27-foot or a 62-foot tank. The verification test evaluated the ability of the RETEC® unit to purify the chromic acid anodize bath solution of process contaminants in the 27 foot chromic anodizing tank. It was tested by *CTC* under the U.S. Environmental Protection Agency (EPA) Environmental Technology Verification Program for P2 Metal Finishing Technologies (ETV-MF). The purpose of this report is to present the results of the verification test.

The RETEC® unit was tested to evaluate and characterize the operation of the electrochemical purification system through measurement of various process parameters. Testing was conducted at DV Industries, Inc. (DVI) in Lynwood, California. DVI anodizes a wide range of aluminum parts for the aerospace, military, and commercial industries.

2.0 DESCRIPTION OF CHROMIC ACID ANODIZE BATH SOLUTION PURIFICATION SYSTEM

2.1 Anodize Bath Purification Equipment

A diagram of the RETEC® unit is shown in **Figure 1**. The RETEC® Model SCP-6 consists of a rectifier, a clarifier to remove metal hydroxides that are formed in the catholyte as acids are purified and recovered, and an electrolytic cell. The electrolyzer box is fabricated of polyvinyl chloride and is supplied with inlet, outlet, and drain connections and valves. The cell consists of a series of anodes and cathodes. The individual lead anodes are contained within separate anode chambers. The front and back sides of the anode chambers have diaphragms of Elramix™, a porous, polymeric membrane, separating the anolyte and catholyte compartments. Elramix™, manufactured by ELTECH International Corporation, was selected as the separator of choice after an extended evaluation of a wide variety of commercial materials having properties required for use as cell separators. Titanium mesh cathodes, which are easily removed from the cell, are placed between each anode chamber. The anodes and cathodes are connected to copper bus bars located on opposite sides of the cell box. The electrolyzer can operate with a full complement of anode chambers or any fewer numbers depending on capacity requirements. The cell is equipped with an air sparging system to prevent metals and metal hydroxides formed in the catholyte from settling in the cell. However, it was determined by DVI that the formation of solids could be controlled by maintaining the pH of the catholyte <2 with additions of chromic acid, and therefore, the air sparging system was not used at DVI.

A thermo-sensor is included with the electrolyzer to shut off the rectifier if the temperature of the liquid being treated exceeds the pre-set limit. A thermo-controller resets the system. The RETEC® electrolyzer is also supplied with a manifold located

beneath the electrolyzer box that hydraulically connects each anode compartment to the anolyte reservoir. The anolyte feed manifold is located beneath the cathode bus bar. Solution from the anodizing tank is pumped into the anode frames through the anolyte feed manifold. The anodizing solution is returned by gravity to the anodizing tank from the anolyte reservoir.

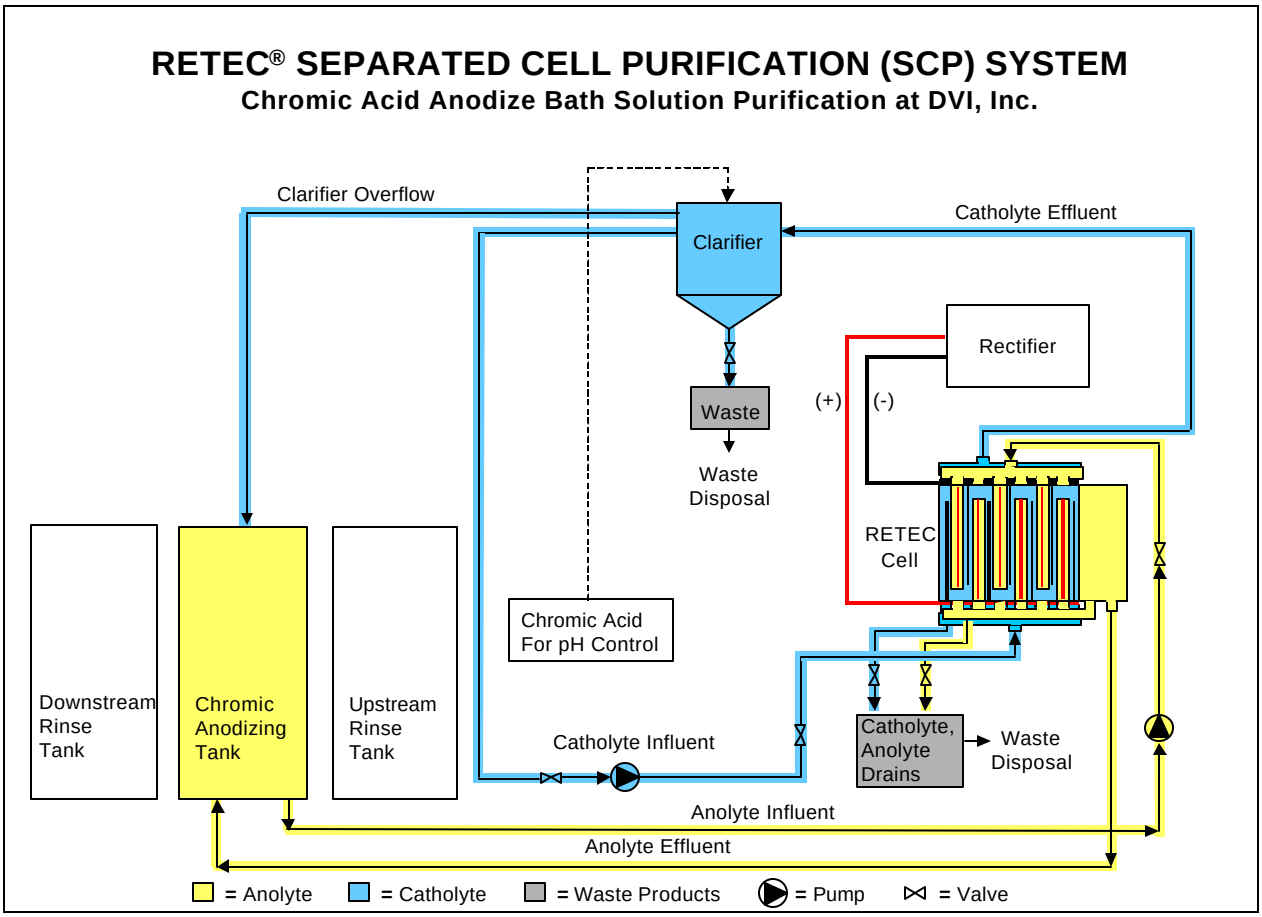

Figure 1. RETEC® Chromic Acid Anodize Bath Solution Purification at DVI, Inc.

The RETEC® electrolyzer sits on a steel chassis, which mounts onto a stand to provide the proper height when installed at the anodizing line. The stand contains shelves for mounting the liquid feed pumps. **Figure 2** shows a picture of a six-compartment acid purification cell (RETEC® SCP-6), clarifier and rectifier similar to the one verified at DVI.

Figure 2. RETEC® SCP-6 System

Utility requirements for the RETEC® Model SCP-6 at DVI include:

- Electricity – Rectifier: 460 VAC, 60 Hz, three-phase SCR
- Electricity – Anolyte Pump: 115 VAC, 50/60 Hz, 1/25 HP, 5 gpm
- Electricity – Catholyte Pump: 115 VAC, 50/60 Hz, 1/16 HP, 10 gpm

2.2 Test Site Installation

The metal finisher selected for testing is DVI in Lynwood, California. Established in 1957, the 135,000 square foot facility has one of the nation's largest anodizing departments. They serve a variety of customers, with a large majority of the work dedicated to the aerospace, military, and commercial industries.

The Lynwood plant utilizes a USFilter RETEC® Model SCP-6 Separated Cell Purification System installed on the 27-foot, 10,000 gallon chromic acid anodizing (type I) line. The Model SCP-6 has been operating successfully in purification mode since 1995. Anodizing bath solution is purified of tramp metals and trivalent chromium, and the catholyte, which is also anodizing bath solution, is circulated through the RETEC® system, resulting in the recovery of hexavalent chromium for reuse in the anodizing bath. DVI has not experienced any degradation in plating quality since the installation of the RETEC® unit. The DVI anodizing line uses a manually operated rack system. Materials anodized on the line consist of various grades of aluminum, primarily 7075, 2024, 2219, 6061, and 7050. Parts first go through an alkaline clean, a caustic etch, then a deoxidizing tank. Subsequently, they go to the anodizing step, and finally the parts are sealed. Each process step is followed by a single-stage flowing rinse. Since the anodizing bath operates at an elevated temperature, there is some evaporation from the

tank. On occasion, DVI will add water and/or chromic acid flakes to the bath to maintain the proper anodizing bath chemical parameters.

The solution from the anodizing bath was re-circulated through the anolyte compartment of the cell at a rate of about 1.5 gpm. The cell applies approximately 200A @ 3 VDC for the electrolytic reaction to take place. Trivalent chrome is oxidized to hexavalent chrome, and at the same time, tramp metals are rejected through the Elramix™ separator into the catholyte compartment. Anodizing solution also acts as the catholyte and is pumped continuously through the catholyte compartment at a rate of about 4 gpm. Hexavalent chrome in the catholyte passes through the Elramix™ into the anolyte compartment – this gives a substantial recovery of the hex chrome from the catholyte at the same time.

The chromic acid used at this facility is created by mixing tap water with chromic acid-flake, which is sold by Van Waters & Rogers, Inc., a company located in Los Angeles, California. The Material Safety Data Sheet (MSDS) for this product can be found in the test plan [Ref. 2]. The concentration of chromic acid is controlled based on free and total chrome concentration, which is determined twice a week by a sodium thiosulfate titration method performed by the DVI process chemists. When measurements indicate that the chromium concentration is approaching the lower recommended operating level, additional chromic acid flakes are added to the anodizing bath.

Fumetrol 140 Mist Suppressant is also added to the bath to act as a wetting agent to lower the surface tension of the bath. Keeping the surface tension of the anodizing bath in the prescribed operating limits keeps the hexavalent chromium air emissions to a minimum. The Fumetrol 140 Mist Suppressant is also sold to DVI by Van Waters & Rogers, Inc., of Los Angeles, California. The MSDS for this product can be found in the test plan [Ref. 2]. The concentration of Fumetrol 140 Mist Suppressant is controlled based on surface tension, which is determined twice a week by stalagmometer measurements performed by the DVI process chemists. When measurements indicate that the surface tension is approaching the upper recommended operating limit, additional Fumetrol 140 Mist Suppressant is added to the anodizing bath.

When the catholyte reaches the aluminum saturation limit (approximately every three months), two-thirds (100 gallons) of the clarifier is drained off and sent for waste disposal. The catholyte is then recharged with a fresh mixture of chromic acid.

2.3 Operating Flow

Anodizing solution is recirculated between the anolyte section of the RETEC® cell and the anodizing tank. During this process, trivalent chromium in the solution is oxidized to hexavalent chromium, and metal cations in solution are transported through the cell separator to the catholyte section of the cell. The rate of trivalent chromium oxidation and the transfer rate of metal cations are related to the operating conditions. The oxidation rate of trivalent chromium will vary with cell current, and will be greater at high current and high trivalent chromium concentration. The anolyte to catholyte transfer

rate of metal cations will depend on the species of cation present in solution, cation concentration, and the pH of the catholyte. Process operating conditions will vary and will depend upon the type and degree of contamination of the anodizing bath.

Catholyte solution is circulated between the catholyte section of the RETEC® cell and the clarifier. The catholyte pH is controlled by the addition of anodizing solution or straight chromic acid to the clarifier. Hexavalent chromium in the catholyte is transferred through the cell separator to the anolyte side of the cell and then to the anodizing tank. Metal impurities in the chemicals added to the clarifier tank for pH control, and those impurities that are transferred from the anolyte through the cell separator into the catholyte, all accumulate in the catholyte solution.

Disposal of the catholyte saturated with tramp metal impurities is required when adjusting the catholyte operating conditions by pH addition is no longer possible. The tramp metal cations precipitate out as their respective hydroxides, which are then separated from solution in the clarifier. This catholyte saturation timeframe varies based on process chemistry, RETEC® operating parameters, contamination build-up rate, and workload, but historically occurs about once every three months.

The diagram in **Figure 3** illustrates the reactions that typically take place in the RETEC® cell. While this simplified diagram shows only one anode chamber, the Model SCP-6 used at DVI contains six anode chambers.

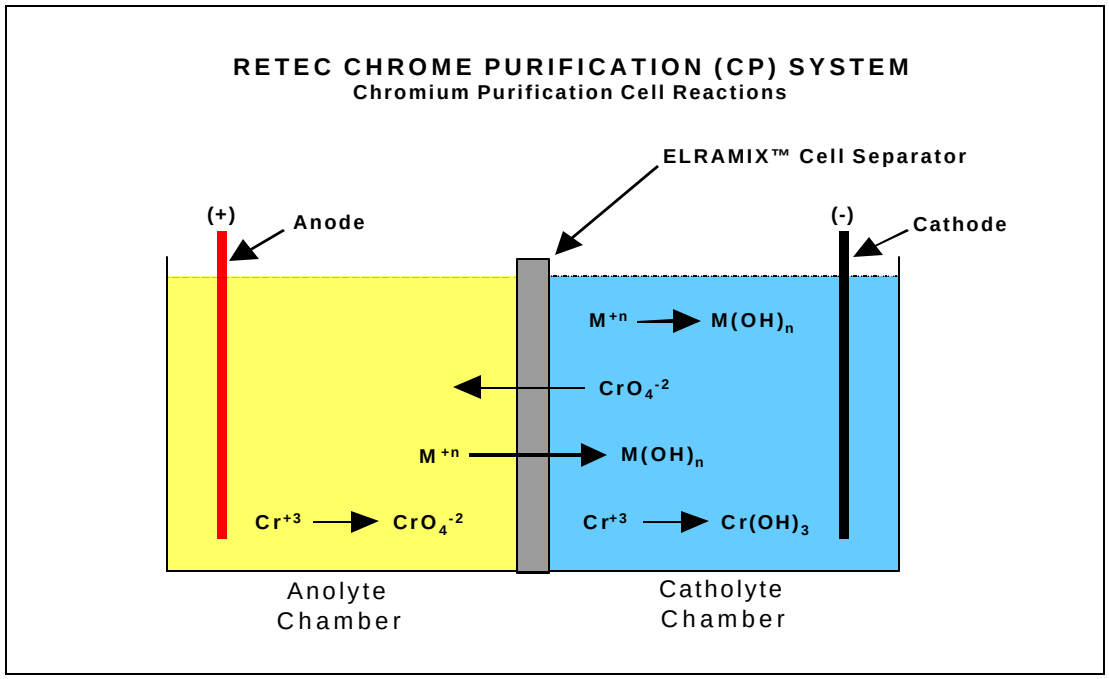

Figure 3. RETEC® Chromium Purification Cell Reactions

At DVI, the RETEC® cell is cleaned on a quarterly basis. This time period was selected out of convenience and does not necessarily reflect the required frequency of cleaning.

The RETEC® unit operating manual suggests that users monitor the physical condition and contamination buildup on the cathodes to determine when the unit requires cleaning. When a high level of contamination buildup on the cathodes is evident, the unit requires cleaning. The contamination rate varies from site to site, depending on factors such as process load and contaminant characteristics. The cleaning schedule is determined through operating experience. The unit was not cleaned during the six weeks of RETEC® operation. Cleaning the RETEC® cell produces about 30 gallons of chromic acid waste.

3.0 METHODS AND PROCEDURES

3.1 Test Objectives

The following is a summary of project objectives. Under normal system operating conditions for the installation at DVI:

- Prepare a material balance for certain anodizing bath constituents and contaminants in order to:
  1) Evaluate the ability of the RETEC® unit to oxidize trivalent chromium formed in the bath during the anodizing process.
  2) Evaluate the ability of the RETEC® unit to remove aluminum and other tramp metals from the process bath that build up during the anodizing process.
  3) Evaluate the ability of the RETEC® unit to recover chromic acid from the catholyte solution.

- Determine the cost of operating the chromic acid anodize bath solution purification system for the specific conditions encountered during testing by:
  1) Determining labor requirements needed to operate and maintain the RETEC® unit.
  2) Determining the quantity of energy consumed by the RETEC® unit during operation.
  3) Determining other costs associated with operation of the RETEC® unit.

- Quantify the environmental benefit by performing an analysis of waste generation, which compares the quantity of waste generated before and after the installation of the RETEC® unit. Data collected to satisfy the test objectives are shown in **Table 1**.

Test Mode	Test Objectives	Test Measurements
Baseline: (RETEC® Off)	Determine the build-up rate of contamination in the chromic acid anodize bath solution.	Chemical characteristics of chromic acid anodize bath solution. Chemical characteristics of upstream and downstream rinse tank water.
	Monitor and record anodizing process operational parameters.	Volume and physical characteristics of chromic acid anodize bath solution. Volume and physical characteristics of anodizing process rinse tank water. Quantity and price of chemical/water additions to the anodizing bath. Production throughput for anodizing bath. Worker exposure to hazardous air emissions.
Operational: (RETEC® On)	Evaluate the ability of the RETEC® unit to oxidize trivalent chromium formed in the bath during the anodizing process.	Volume of anodizing solution and flow rate through RETEC® unit. Chemical characteristics of chromic acid anodize bath solution (anolyte).
	Evaluate the ability of the RETEC® unit to remove aluminum and other tramp metals from the process bath that build up during the anodizing process.	Volume of anodizing solution and flow rate through RETEC® unit. Chemical characteristics of chromic acid anodize bath solution (anolyte). Volume, flowrate and chemical characteristics of catholyte solution. Volume and chemical characteristics of the waste products.
	Evaluate the ability of the RETEC® unit to recover chromic acid from the catholyte solution.	Volume of anodizing solution and flow rate through RETEC® unit. Chemical characteristics of chromic acid anodize bath solution (anolyte). Volume, flow rate and chemical characteristics of catholyte solution. Volume and chemical characteristics of the waste products.
	Monitor and record anodizing process and RETEC® system operational parameters.	Volume and physical characteristics of anodizing solution (anolyte). Volume and physical characteristics of chromic acid catholyte solution. Volume and physical characteristics of anodizing process rinse tank water. Quantity and price of chemical/water additions to the anodizing bath. Quantity and price of chemical/water additions to the RETEC® system. Production throughput for anodizing bath. Worker exposure to hazardous air emissions.
	Determine labor requirements needed to operate and maintain the RETEC® unit.	O&M labor required during test period.
	Determine the quantity of energy consumed by the RETEC® unit during operation.	Quantity of energy used by liquid transfer pumps (anolyte and catholyte). Quantity of energy used by RETEC® electrochemical cell (rectifier).
	Determine the cost of operating the chromic acid anodize bath purification system for the conditions encountered during testing.	Costs of O&M labor, materials, and energy required during test period. Quantity and price of make-up and process control chemicals/water added during testing.
	Quantify/identify the environmental benefit.	Review historical waste disposal records and compare to current practices.

Table 1. Test Objectives and Related Test Measurements Conducted During the Verification of the USFilter RETEC® Model SCP-6

3.2 Test Procedure

3.2.1 System Set-Up

Prior to testing, the RETEC® cell was turned off, drained and cleaned, and the clarifier was emptied according to the manufacturer's instructions [Ref. 1]. Five weeks of anodizing and sampling were completed with the RETEC® unit turned off. At the end of the five-week "Baseline" period, the RETEC® cell and clarifier were filled with freshly mixed chromic acid solution to act as the catholyte, and the RETEC® unit was started. Weekly sampling continued, once the unit was operating, for another six weeks with an anolyte flow rate of about 2.0 gpm. This flow rate is in the middle of the target operating range used by DVI.

3.2.2 Testing

The RETEC® unit was tested in accordance with the verification test plan [Ref. 2. Testing was conducted during two distinct test periods:

During the first test period (Baseline Mode), the unit was turned off and weekly sampling occurred under normal production conditions at DVI. Contamination build-up data and process operating measurements were gathered during this five-week period.

During the second test period (Operational Mode), the RETEC® unit was turned on and operated under normal production conditions. Weekly samples were taken to determine contaminant removal rate from the anodizing bath and the recovery rate of hexavalent chromium from the process.

As indicated in section 2.2, when the catholyte reaches the aluminum saturation limit (approximately every 90 days), two-thirds (100 gallons) of the clarifier is drained off and sent for waste disposal. The catholyte is then recharged with a fresh mixture of chromic acid. The Operational Mode commenced with a fresh mixture of chromic acid catholyte. Therefore, during this project, Operational Mode testing was conducted during the 1st quarter of the semi-annual operating cycle. Clarifier samples are scheduled to be collected in the final quarter of the operating cycle as well, and an revision of the Verification Report stating the volume and composition of this RETEC waste stream will be issued when this catholyte lifespan data is obtained.

3.3 Quality Assurance/Quality Control

3.3.1 Data Entry

Sampling events, process measurements, and all other data were recorded by the ETV-MF Project Manager or his representative on pre-designed forms provided in the verification test plan [Ref 2].

3.3.2 Sample Collection and Handling

Prior to the verification test, sampling ports were installed on the anolyte and catholyte lines of the RETEC® unit. Polyethylene tubes were connected to these two sampling ports and directed into 500-ml High Density Polyethylene (HDPE) aqueous sample containers. 500 ml grab samples were taken with a 1000 ml polypropylene sampling beaker from the anodizing bath, rinse tanks and waste drums. During sampling, the sample collection containers were kept cool by placing them in a cooler containing ice.

All aqueous samples were collected in the HDPE containers at weekly intervals over an eleven-week period. At the end of each weekly sampling event, the HDPE containers were labeled and stored in a cooler containing ice, awaiting shipment to the analytical laboratories.

A sample of the chromic acid-flake (MSDS # OZ4824) supplied by Van Waters & Rogers, Inc. of Los Angeles, California, was collected from its original shipping container. These samples were labeled and stored prior to shipment in a cooler containing ice.

Samples shipped to the analytical laboratories were packed in coolers containing "blue ice." A laboratory courier picked up and delivered the samples within six hours of sampling. All shipments were secured with strapping tape and security seals and accompanied by chain of custody forms.

3.3.3 Calculation of Data Quality Indicators

Data reduction, validation, and reporting were conducted according to the verification test plan [Ref. 2] and the ETV-MF Quality Management Plan (QMP) [Ref. 3]. Calculations of data quality indicators are discussed in this section.

3.3.3.1 Precision

Precision is a measure of the agreement or repeatability of a set of replicate results obtained from duplicate analyses made in the laboratory under identical conditions. To satisfy the precision objectives, the replicate analyses must agree within defined percent deviation limits, expressed as a percentage, Relative Percent Difference (RPD), calculated as follows:

$$RPD = \{(|X_1 - X_2|)/(X_1 + X_2)/2\} \times 100\% = \left\{ \frac{|X_1 - X_2|}{\frac{(X_1 + X_2)}{2}} \right\} \times 100\%$$

where,

X_1 = larger of the two observed values
X_2 = smaller of the two observed values

The analytical laboratories performed a total of 75 precision evaluations on aqueous samples. All of the results were within the precision limits identified in the verification test plan [Ref. 2]. The results of the precision calculations are summarized in **Appendix A.**

3.3.3.2 Accuracy

Accuracy is a measure of the agreement between an experimental determination and the true value of the parameter being measured. Analyses with spiked samples were performed to determine percent recoveries as a means of checking method accuracy. The percent recovery, expressed as a percentage, is calculated as follows:

$$P = \left[\frac{(SSR - SR)}{SA}\right] x\ 100\%$$

where:

SSR = spiked sample result
SR = sample result (native)
SA = the concentration added to the spiked sample

Quality Assurance (QA) objectives are satisfied for accuracy if the average recovery is within selected goals. The analytical laboratories performed 75 accuracy evaluations on aqueous samples. All results were within the limits identified in the verification test plan [Ref. 2]. The results of the accuracy calculations are summarized in **Appendix B.**

3.3.3.3 Completeness

Completeness is defined as the percentage of measurements judged to be valid compared to the total number of measurements made for a specific sample matrix and analysis. Completeness, expressed as a percentage, is calculated using the following formula:

$$\text{Completeness} = \frac{\text{Valid Measurements}}{\text{Total Measurements}} \times 100\%$$

QA objectives are satisfied if the percent completeness is 90 percent or greater. All measurements made during this verification project were determined to be valid and completeness was 100 percent. Therefore the completeness objective was satisfied.

3.3.3.4 Comparability

Comparability is a qualitative measure designed to express the confidence with which one data set may be compared to another. Sample collection and handling techniques, sample matrix type, and analytical method all affect comparability. Comparability was achieved during this verification

test by the use of consistent methods during sampling and analysis and traceability of standards to a reliable source.

3.3.3.5 Representativeness

Representativeness refers to the degree to which the data accurately and precisely represent the conditions or characteristics of the parameter being tested. For this verification project, one field duplicate sample was collected from each sample location and sent to the laboratory for analysis. Representativeness was calculated as an RPD of these field duplicates. The results of these calculations are shown in **Appendix C**.

3.3.3.6 Sensitivity

Sensitivity is the measure of the concentration at which an analytical method can positively identify and report analytical results. The sensitivity of a given method is commonly referred to as the detection limit. Although there is no single definition of this term, the following terms and definitions of detection were used for this project.

Instrument Detection Limit (IDL) is the minimum concentration that can be differentiated from instrument background noise; that is, the minimum concentration detectable by the measuring instrument.

Method Detection Limit (MDL) is a statistically determined concentration. It is the minimum concentration of an analyte that can be measured and reported with 99 percent confidence that the analyte concentration is greater than zero, as determined in the same or a similar sample matrix. In other words, this is the lowest concentration that can be reported with confidence. It may be determined by an IDL. The MDLs for this verification project are shown in **Table 2**.

Method Reporting Limit (MRL) is the concentration of the target analyte that the laboratory had demonstrated the ability to measure within specified limits of precision and accuracy during routine laboratory operating conditions. [This value is variable and highly matrix dependent. It is the minimum concentration that will be reported without qualifications by the laboratory].

Critical Measurements	Matrix	Method	Reporting Units	Method of Determination	MDL	MRL
Hexavalent Chrome	Aqueous (Bath/ RETEC®)	See Note 1	g/L	Titration	1.10 g/L	2.00 g/L
Trivalent Chrome	Aqueous (Bath/ RETEC®)	See Note 1	g/L	Titration	1.10 g/L	2.00 g/L
Hexavalent Chrome	Aqueous (Rinsewater)	SM 3500 Cr D	µg/L	Colorimetric	10 µg/L	100 µg/L
Trivalent Chrome	Aqueous (Rinsewater)	SM 3500 Cr D	µg/L	Colorimetric	5 µg/L	100 µg/L
Selected Metals (Cr, Al & Mg)	Aqueous	SW-846 3010A/ 6010B	µg/L	ICP-AES	2 –100 µg/L	10 –100 µg/L
Selected Metals (Cr, Al & Mg)	Solid (Cr Flake)	SW-846 3050B/ 6010B	mg/Kg	ICP-AES	2 –20 mg/Kg	2 –20 mg/Kg

Note 1: Standard sodium thiosulfate titration was used to determine the hexavalent and trivalent chromium concentration. These procedure were taken directly from the 1999 Metal Finishing Guidebook, Vol. 97, No. 1, Control, Analysis, and Testing Section – Chemical Analysis of Plating Solutions, Charles Rosenstein and Stanley Hirsch, Table VIII – Test Methods for Electroplating Solutions, page 538.

SM = Standard Methods for the Examination of Water and Wastewater, 20th Edition, January 15, 1999.

ICP-AES = Inductively Coupled Plasma-Atomic Emission Spectrometry (EPA SW-846 Method 6010B)

Table 2. Laboratory Methodology Information

4.0 VERIFICATION DATA

4.1 Analytical Results

A complete summary of analytical data for the anolyte and catholyte is presented in **Table 3**. Samples were collected over an eleven-week period and analyzed for hexavalent and trivalent chromium, total chromium, aluminum and magnesium. During the five-week Baseline Mode, samples were collected from the chromic acid anodize bath solution as grab samples directly from the anodizing bath. During the Operational Mode, samples were taken from the sampling ports installed on the RETEC® anolyte and catholyte liquid transfer lines. The "1Q" samples are post-verification test samples from the anolyte and catholyte lines of the RETEC® unit, collected at the end of the 1st quarter of the catholyte operating cycle, 11 weeks after the RETEC® unit was turned on, and just prior to disposal of the anodizing bath. Anodizing bath disposal was required because aluminum contamination reached the bath's upper limit.

The primary contaminants of the chromic acid anodizing bath solution are aluminum and magnesium. The values for these parameters during the Baseline Mode represent contaminant build-up during normal production conditions. During the Operational Mode, the RETEC® unit was placed in operation to purify the chromic acid anodize bath solution. The normal production conditions observed in the Baseline Mode were maintained in the Operational Mode.

Sampling Week	Hexavalent Chromium (by titration) g/L Anolyte / Catholyte	Trivalent Chromium (by titration) g/L Anolyte / Catholyte	Total Chromium (by ICP-AES) g/L Anolyte / Catholyte	Total Aluminum (by ICP-AES) g/L Anolyte / Catholyte	Total Magnesium (by ICP-AES) g/L Anolyte / Catholyte
0- Baseline	48.0 / NA	< 1.1 / NA	49.0 / NA	3.6 / NA	0.27 / NA
1- Baseline	48.0 / NA	< 1.1 / NA	46.0 / NA	3.7 / NA	0.31 / NA
2- Baseline	48.1 / NA	< 1.1 / NA	42.0 / NA	3.8 / NA	0.25 / NA
3- Baseline	47.5 / NA	< 1.1 / NA	43.0 / NA	4.0 / NA	0.26 / NA
4- Baseline	50.5 / NA	< 1.1 / NA	50.0 / NA	4.5 / NA	0.32 / NA
5- Baseline	51.5 / 20.6	< 1.1 / < 1.1	46.0 / 18.0	4.5 / 0.1	0.32 / 0.09
6- Operational	52.6 / 21.3	< 1.1 / < 1.1	44.0 / 20.0	4.1 / 2.0	0.29 / 0.12
7- Operational	52.9 / 22.5	< 1.1 / < 1.1	44.0 / 21.0	4.1 / 3.2	0.22 / 0.15
8- Operational	53.5 / 36.1	< 1.1 / < 1.1	48.0 / 34.0	4.6 / 3.8	0.24 / 0.20
9- Operational	53.8 / 41.5	< 1.1 / 1.7	46.0 / 42.0	4.4 / 5.4	0.21 / 0.25
10- Operational	Thanksgiving holiday - no samples collected this week.				
11- Operational	52.7 / 51.6	< 1.1 / < 1.1	50.0 / 48.0	4.9 / 6.4	0.24 / 0.28
16- 1Q	NA	NA	52.5 / 50.5	5.4 / 7.5	0.26 / 0.31

NA = Not applicable

Table 3. Summary of Analytical Results (RETEC® & Bath)

4.2 Process Measurements

Certain process measurements were taken on a weekly basis during verification testing. These data have been consolidated and are summarized in **Table 4**. Aqueous temperature and pH measurements were taken using a hand-held digital thermometer/pH meter. Aqueous flow rates were measured using a portable ultrasonic flow meter. Anodizing bath surface tension was measured using a du Nouy tensiometer. Total amp-hours for the RETEC® system were recorded from a cumulative amp-hour meter installed on the control panel of the rectifier.

Test Mode/ Sample Date	Anodizing Bath Volume, gallons	Anodizing Bath Surface Tension dynes/cm	Anodizing Bath (Anolyte) Temp. °C	Anodizing Bath pH	Anolyte Flow Rate gpm	RETEC® Amp-hours Ah	Catholyte Temp. °C	Catholyte pH	Catholyte Flow Rate gpm
Baseline Mode									
09-14-00	9,240	24.6	38.5	0.70	N/A	N/A	N/A	N/A	N/A
09-21-00	9,320	20.7	36.2	0.55	N/A	N/A	N/A	N/A	N/A
09-28-00	9,320	19.6	35.9	0.75	N/A	N/A	N/A	N/A	N/A
10-05-00	9,400	24.8	34.1	1.04	N/A	N/A	N/A	N/A	N/A
10-12-00	9,400	24.7	34.0	0.69	N/A	N/A	N/A	N/A	N/A
10-19-00	9,320	24.7	35.3	0.73	N/A	N/A	N/A	N/A	N/A
Average	**9,333**	**23.2**	**35.7**	**0.74**	**N/A**	**N/A**	**N/A**	**N/A**	**N/A**
Operational Mode									
10-26-00	9,320	26.3	33.3	0.81	1.51	27,594	31.5	1.08	4.49
11-02-00	9,240	26.6	33.4	0.81	1.44	31,285	31.4	2.89	3.78
11-09-00	9,240	27.3	34.0	1.11	1.69	34,264	30.7	1.19	4.44
11-16-00	9,160	28.1	33.3	0.86	1.64	38,744	30.7	2.52	2.98
11-23-00	*	*	*	*	*	41,372	*	*	*
11-30-00	9,240	27.1	33.2	0.95	2.94	43,598	31.4	1.12	4.26
Average	**9,240**	**27.1**	**33.4**	**0.91**	**1.84**	**36,143**	**31.1**	**1.76**	**3.99**

* Thanksgiving holiday – no monitoring done this week.
NA = Not Applicable

Table 4. Summary of Process Measurements

Anodizing bath volume is maintained by the periodic addition of water to the anodizing tank by the DVI maintenance personnel. There was only one water addition to the anodizing bath during the eleven-week verification test period. 160 gallons of water was added to the anodizing tank during the Baseline Mode on 10-5-00.

Anodizing bath surface tension is required to be maintained below 40 dynes/cm. Maintaining the surface tension of the chromic acid anodizing bath below this level limits hexavalent chromium air emissions. In order to maintain the surface tension below the required limit, DVI maintenance personnel added a total of 17 gallons of Fumetrol 140 Mist Suppressant (MSDS# P14857VS) which is supplied by Van Waters & Rogers, Inc. of Los Angeles, California. Six gallons were added to the anodizing tank during the Baseline Mode, and 11 gallons were added during the Operational Mode.

The target anolyte flow rate range specified by USFilter for DVI's RETEC® system is 1-3 gpm. The target flow rate for the catholyte is 4 gpm. During operation of the unit, operators adjust the flow rate of the anolyte and catholyte solutions within the recommended operating limits. If the anolyte flow is too high, there is an increase in the bleed-through of anolyte from the anolyte side of the system to the catholyte side, causing the clarifier to overflow. Clarifier overflow is normally piped back to the anodizing tank for reintroduction to the anolyte loop, but was disconnected and piped to temporary storage drums for the duration of the verification test in order to track its

volume. Clarifier overflow averaged about 35 gallons per week with a total of 212 gallons during the six weeks of RETEC® operation.

Total amp-hours for the RETEC® unit is a function of the electricity required to complete the electrochemical reaction in the cell. The amount of electricity introduced to the process is controlled by adjusting the voltage of the RETEC® cell. The amount of voltage required is dependent on several factors, including the chemical composition and physical characteristics of the catholyte. To maintain the catholyte in the proper pH for the reaction to occur, an average of 17 pounds of chromic acid flake was added to the clarifier each week of the test (total 102 pounds) over the 6 weeks of RETEC® operation.

4.3 Production Data

The RETEC® system is connected to the 27-foot chromic acid anodizing tank at DVI. The anodizing bath can accept parts up to 26'x10'x5'; however, due to the large quantity of uniquely sized parts, it was not feasible to measure production volume by square feet anodized. At DVI, production volume is measured in overall amp-hours for the 27-foot line. The amp-hours required to anodize parts in the 27-foot line during verification testing are summarized in **Table 5**.

Test Mode/ Sample Date	Anodizing Bath Amp-hours
Baseline	
09-14-00	0
09-21-00	52,834
09-28-00	48,618
10-05-00	41,720
10-12-00	40,863
10-19-00	43,068
Total Baseline	**227,103**
Operational	
10-26-00	38,344
11-02-00	38,585
11-09-00	32,371
11-16-00	44,338
11-23-00	39,505
11-30-00	26,936
Total Operational	**220,079**
Total	**447,182**

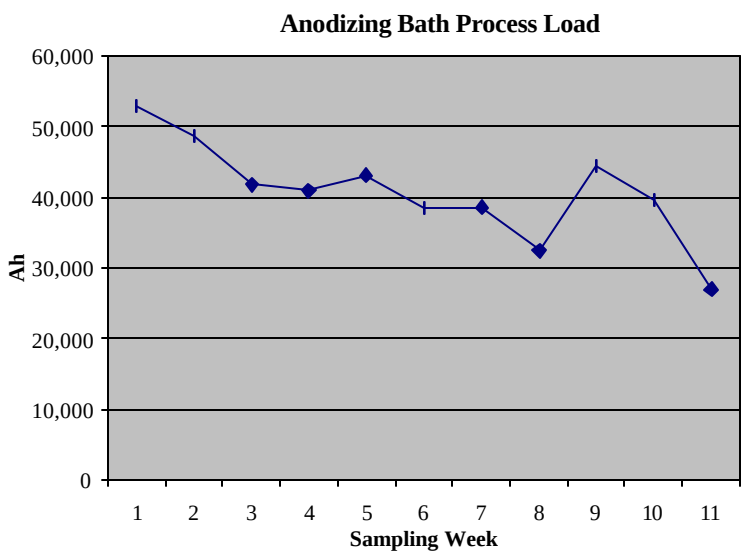

Table 5. DVI Production (Ah required for anodizing)

4.4 Other Data

Other data collected during the course of the verification test are summarized in **Table 6**.

Description	Value
Cost of chromic acid flake	$1.31 per lb
Chromic acid used 3/20/99-1/3/00 - RETEC® off*	9,010 lb
Chromic acid used 1/3/00-9/6/00 - RETEC® on*	8,890 lb
Chromic acid additions during Baseline Mode	990 lbs
Chromic acid additions during Operational Mode	760 lbs
Cost of Fumetrol 140 Mist Suppressant	$515/gal
Fumetrol 140 used 3/20/99-1/3/00 - RETEC® off*	32 gal
Fumetrol 140 used 1/3/00-9/6/00 - RETEC® on*	31 gal
Fumetrol 140 additions during Baseline Mode	14 gal
Fumetrol 140 additions during Operational Mode	17 gal
Electricity by cost	$0.09/kWh
Labor cost (loaded rate)	$10.00/hr
Initial cost RETEC® unit*	$33,630 (1993)
Installation cost RETEC® unit*	$1,600 (1993)

*Data from DVI historical records

Table 6. Other Data Collected During Verification

4.5 Hexavalent Chromium Air Monitoring

Air emissions from the DVI anodizing bath/RETEC unit were tested for hexavalent chromium. The objective of this testing was to check to see if the RETEC unit contributed to the concentration of airborne hexavalent chromium in the DVI facility. Air monitoring was conducted in both the Baseline and Operational phases of the verification test. During each phase, multiple two-hour samples were collected from a stationary process emissions monitor as well as a worker breathing zone air monitor for personal exposure. Personal exposure and process emissions samples were collected in accordance with appropriate National Institute of Occupational Safety and Health (NIOSH), and California Air Resources Board (CARB) methods, respectively. Both types of samples were analyzed according to EPA method 306 for hexavalent chromium.

5.0 EVALUATION OF RESULTS

5.1 Oxidation of Trivalent Chromium to Hexavalent Chromium

The oxidation of trivalent chromium to hexavalent chromium in the anolyte and the transfer of hexavalent chromium across the polymeric membrane from the catholyte to the anolyte by the RETEC® unit is marketed as one of the beneficial conversions performed by the electrodialysis process. However, as can be seen in **Table 3**, trivalent chromium levels were never above background levels in the anolyte, so there was no quantifiable oxidation to hexavalent chromium. A slight increase in hexavalent chromium levels in the anolyte was observed, but since DVI adds chromic acid to the anodizing bath on a regular basis, this increase in hexavalent chromium concentration can

not be definitively attributed to the RETEC® electrolytic reaction. Increases in catholyte hexavalent chromium may be attributed to the fact that DVI adds chromic acid flake to the catholyte to control catholyte pH. Hexavalent chromium levels measured by titration that are higher than total chromium levels measured by ICP-AES are due to uncertainties inherent in the precision of these two analytical methods.

5.2 Contaminant Removal

Reduction of the rate of increase of the primary contaminants of the chromic acid anodize bath solution, aluminum and magnesium, are shown in **Table 7**. For the Baseline Mode, the average weekly aluminum increase in the anolyte was 0.180 g/L. The average weekly magnesium increase in the anolyte was 0.010 g/L. During the Operational Mode, aluminum and magnesium levels in the anolyte remained relatively stable, while the catholyte showed an overall increase of 6.32 g/l of aluminum. The total volume of catholyte solution at the end of the verification test was 392 gallons (150 gallons in the clarifier + 30 gallons in the RETEC® cell and piping + 212 total gallons of catholyte overflow collected during the test). Multiplying the aluminum contamination increase in the catholyte by the total catholyte volume gives an overall removal of 9,378 grams of aluminum from the anolyte solution over the six week test period (6.32 g/l x 392 gallons x 3.7854 liters/gallon = 9,378 grams). The increase in magnesium contamination in the catholyte was less pronounced, showing an overall increase of 0.19 g/l. Multiplying the magnesium contamination increase in the catholyte by the total catholyte volume gives an overall removal of 282 grams of magnesium from the anolyte solution over the six week test period (0.19 g/l x 392 gallons x 3.7854 liters/gallon = 282 grams). The RETEC® unit proved to be an adequate technology for removing aluminum contamination from the chromic acid anodize solution at DVI; however, the unit was not able to completely arrest the contamination rise in the anodizing bath. Since the six-cell model installed at DVI is the smallest RETEC® unit made by USFilter, it is possible that a larger unit may solve this problem. However, since the RETEC® unit was turned on when the anodizing bath was within 1.6 g/L of its upper limit for aluminum, the purification system was unable to prevent the anodizing bath from reaching the upper contamination limit, triggering disposal of the anodizing bath. It can be concluded that the RETEC® system extended the anodizing bath life by slowing the contamination build-up rate, but due to the relatively short verification test period, the length of this extension could not be determined.

Anolyte		**Start (g/L)**	**End (g/L)**	**Change (g/L)**	**Average Weekly Increase (g/L)**
Aluminum	Baseline Mode	3.6	4.5	+0.9	+0.180
	Operational Mode	4.5	4.9	+0.4	+0.067
Magnesium	Baseline Mode	0.27	0.32	+0.05	+0.010
	Operational Mode	0.32	0.24	-0.08	-0.0133
Catholyte					
Aluminum	Operational Mode	0.085	6.40	+6.32	+1.053
Magnesium	Operational Mode	0.087	0.28	+0.19	+0.0317

Table 7. Contaminant Removal

5.3 Mass Balance

Mass balance calculations are designed to be an accounting of the weights of materials entering and leaving a processing unit. They help to evaluate how effectively the sampling and analytical procedures account for certain key parameters.

Initially, this verification test included a planned mass balance exercise to be contained in the verification report; however, due to specific process design at DVI and technical constraints, it was determined that a mass balance exercise would not be feasible. Mass balance calculations typically measure the inputs to a process and compare them with the outputs to confirm that the totality of all output constituents are equal or close to the input constituents. This comparison is highly effective in determining the process efficiency and sampling/analytical accuracy for a single pass processing system such as a filter, or a multi-pass processing unit such as a membrane with an influent that is stable or exhibits a known flux in constituents.

At DVI, it is impossible to detect a contaminant differential in the influent and effluent of the RETEC® system. The unit removes a minute amount of tramp metals and oxidizes an even smaller amount of trivalent chromium to hexavalent chromium on each pass, but analytical methods and their inherent limitations on accuracy, precision and resolution prohibit the measurement of these changes during a single pass through the system. When measured over an extended period of weeks, a change trend was observed, but a mass balance calculation still remains impossible since an unknown, continuously changing amount of tramp metals are introduced into the equation on an irregular basis during normal processing.

The closest resemblance to a mass balance exercise one can conduct is an estimated aluminum mass balance. The increase in aluminum contamination in the anodizing bath during the Baseline Mode was 0.9 g/L. Normalized to the Ah of work completed during that period, there was a 3.96×10^{-3} g/L rise in aluminum contamination for every 1,000 Ah. If that contamination rate is extended into the Operational Mode for the amount of work done during that period, there should have been an aluminum contamination increase of another 0.87 g/L in the anodizing bath. The bath, at 34,973 L the last day of the test, should have generated an additional 30,480 grams of aluminum contamination.

If the actual analytical results for aluminum in the anodizing bath are totaled, the RETEC® system catholyte and the clarifier overflow, 23,431 grams of aluminum can be accounted for (77 percent). (NOTE: aluminum and magnesium in the upstream and downstream rinse tanks, as well as the raw chromic acid flakes was negligible, less than 0.85% of the aluminum generated during the test – see **Table 8**.) The missing 23 percent of aluminum (7,049 grams, or 0.201 g/L in the anodizing bath) could be attributed to the inherent limitation in precision of the analytical method, which was as high as 4 percent for the DVI verification test. A variation of 4 percent translates to final aluminum contamination reading of the anodizing bath of ± 0.196 g/L (4.9 x .04), very close to the missing 0.201 g/L. Metals solids can also precipitate out of solution from the catholyte. A small amount of this granular solid, not accounted for in the analytical results, was observed building up and settling to the bottom of the RETEC® reaction cell. Still more is assumed to be at the bottom of the clarifier, but quantities were not ascertainable

during the test period. Another explanation for the missing aluminum is the possible formation of aluminum complexes in the anodizing bath, which the aluminum analytical method does not measure. In the Electroplating Engineering Handbook by Lawrence J. Durney [Ref. 4], it is stated that dissolved aluminum can react with trivalent and hexavalent chromium to form aluminum dichromate. This aluminum complex is not detected by the aluminum analytical method used to measure the aluminum in the bath, and could therefore account for the missing aluminum.

Sampling Week	Hexavalent Chromium (Colorimetric) g/L Upstream Rinse / Down Rinse	Trivalent Chromium (Colorimetric) g/L Upstream Rinse / Down Rinse	Total Chromium (ICP-AES) g/L Upstream Rinse / Down Rinse	Total Aluminum (ICP-AES) g/L Upstream Rinse / Down Rinse	Total Magnesium (ICP-AES) g/L Upstream Rinse / Down Rinse
0- Baseline	.043 / .0043	< .00001 / .00052	.041 / .0049	.0033 / < .0002	.015 / .016
1- Baseline	.034 / .0028	< .00001 / .00056	.031 / .0034	.0026 / .0003	.015 / .015
2- Baseline	.039 / .0019	< .00001 / .00035	.036 / .0021	.0033 / .0004	.015 / .015
3- Baseline	.041 / .0056	< .00001 / .00069	.038 / .0064	.0037 / .001	.015 / .015
4- Baseline	.053 / .0063	< .00001 / .0004	.047 / .0071	.0044 / .0007	.015 / .015
5- Baseline	.071 / .0058	< .00001 / .00099	.064 / .0066	.0066 / .0014	.015 / .015
6- Operational	.048 / .0036	< .00001 / .0005	.044 / .0041	.0045 / .0007	.014 / .015
7- Operational	.034 / .0016	< .00001 / .00046	.031 / .002	.003 / .0003	.015 / .015
8- Operational	.034 / .0017	< .00001 / .0007	.029 / .0025	.0029 / .0006	.015 / .015
9- Operational	.083 / .0046	< .00001 / .00042	.078 / .0055	.0079 / .0007	.016 / .016
10- Operational	Thanksgiving holiday - no samples collected this week.				
11- Operational	.051 / .0031	< .00001 / .00029	.046 / .0036	.0049 / .0005	.015 / .016
Chromic Flake	NA	NA	480.0 (g/Kg)	0.15 (g/Kg)	1.2 (g/Kg)

NA = Not applicable

Table 8. Summary of Analytical Results (Rinse & Flake)

5.4 Hexavalent Chromium Air Monitoring Results

Baseline air monitoring results indicated an average process hexavalent chromium emission of 0.1112 $\mu g/m^3$. Personal exposure monitoring resulted in an average of 0.5199 $\mu g/m^3$. Both readings are well within the Occupational Safety and Health Administration (OSHA) Permissible Exposure Limit (PEL) of 100 $\mu g/m^3$ and the American Conference of Government Industrial Hygienists (ACGIH) Threshold Limit Value (TLV) of 50 $\mu g/m^3$.

Operational air monitoring results showed an average process hexavalent chromium emission of 1.3495 µg/m^3. These readings are twelve times higher than the Baseline results, however, they are still well below the OSHA and ACGIH limits. A certain increase in process emissions was expected due to the aeration of the open-topped RETEC clarifier that took place during the operational phase of the verification test. The stationary air monitoring equipment collected samples from an elevated platform adjacent to the RETEC clarifier.

Personal monitoring during the operational phase was performed, however, the worker being monitored also performed maintenance on paint booth filters which contained dried chromium containing paint flakes and dust. This activity contaminated the samples, so the results were discarded.

Sample Location	Run No.	Volume of Air Sampled (m^3)	Hexavalent Chromium	
			ug/sample	ug/m^3
RETEC Clarifier	Run #1	1.89	0.198	0.105
	Run #2	1.96	0.099	0.051
	Run #3	1.96	0.349	0.178

Table 9. Air Monitoring Results – Baseline Phase

Sample Location	Run No.	Volume of Air Sampled (m^3)	Hexavalent Chromium	
			ug/sample	ug/m^3
RETEC Clarifier	Run #1	1.88	1.20	0.638
	Run #2	1.88	1.56	0.830
	Run #3	2.05	5.29	2.581

Table 10. Air Monitoring Results – Operational Phase

Operational air monitoring abnormalities withheld, the RETEC system exhibited a slight increase in the overall hexavalent air emissions to the DVI facility. It is imperative to realize that this increase only raised the DVI ambient air quality from 0.2% to 2.7% of the ACGIH TLV. The results of the air monitoring are shown in **Tables 9** and **10.**

5.5 Energy Use

The primary energy requirements for operating the RETEC® system at DVI include electricity for the system rectifier and liquid transfer pumps. Electricity is also used for instrumentation and intermittent compressed air used for agitation; however, the energy requirements for these are less significant and were not evaluated during this project.

RETEC® system rectifier electrical requirements (volts, amps and amp hours) were recorded from gauges on the RETEC® system rectifier instrument panel each week. The results are summarized in **Table 11**.

Rectifier electricity use was calculated by multiplying total amp-hours by average system voltage and dividing by 1,000 (3.11 x 216,857/1,000) to get 675.9 kWh for the six week Operational Mode of the verification test. This reduces to an average of 16.1 kWh/day. Since the rectifier is left on at all times, the total annual consumption operating 365 days per year is 5,876.5 kWh/yr.

Liquid transfer pump electricity use was calculated by multiplying the horsepower (HP) of each system pump (1/25 and 1/16 HP) by .746 kW/HP-hr by the number of hours of use. The result is 191.0 kWh/yr and 298.4 kWh/yr respectively, based on continuous use (6,400 hrs/yr) of the pumps. Therefore the combined energy consumption for the liquid transfer pumps is 489.4 kWh/yr, making the total electricity demands for the entire RETEC® system 6,366 kWh/yr.

Test Mode/ Sample Date	Amperage (amps)	Voltage (VDC)	Amp-hours (Ah)
Operational			
10-19-00	312	3.0	0
10-26-00	148	3.6	27,594
11-02-00	140	3.4	31,285
11-09-00	230	3.1	34,264
11-16-00	165	2.7	38,744
11-23-00	*	*	41,372
11-30-00	350	2.9	43,598
Total			**216,857**

*No sampling taken during Thanksgiving; however, recording devices continued to measure and read data

Table 11. RETEC® System Rectifier Electrical Requirements

5.6 Operating and Maintenance Labor Analysis

Operations and maintenance (O&M) labor requirements for the purification system were observed during testing. Quarterly, the RETEC® cell is drained and cleaned. This process was not observed during the verification test; however, interviews with maintenance personnel and supervisors determined that it takes about 4 labor hours to complete the cleaning and start-up procedure (16 hr/yr).

On a daily basis, operators periodically checked and recorded the anolyte and catholyte flow rates, rectifier voltage/amperage and catholyte pH and made adjustments, when necessary. At 5 minutes per shift, three shifts per day, five days per week (plus one shift on Saturday), these daily tasks take approximately one hour and twenty minutes each week to perform. On a 50-week/yr basis, operating checks take approximately 67 hrs/yr.

RETEC® system chemical additions are another maintenance labor requirement. Periodic additions of chromic acid to the clarifier are necessary to keep the pH of the catholyte under a pH of 2. Keeping the catholyte pH at this level prevents the precipitation of the tramp metals and other contaminants as their respective hydroxides. Observation of the maintenance personnel showed an average of 40 minutes per week dedicated to the

preparation and addition of chromic acid to the catholyte. On a 50-wk/yr basis, chemical additions take approximately 33 hrs/yr.

Typical equipment maintenance and parts replacement average about two hours per month (24 hrs/yr). In summary, total O&M labor requirements for the RETEC® system average about 140 hrs/yr.

Other O&M labor associated with the chromic acid anodizing process, which is affected by the operation of the purification unit, is the disposal and make-up of anodizing bath chemistries. This process involves draining a pre-identified amount of the chromic acid anodizing solution, and refilling the tank with fresh water and chemicals. Sometimes DVI does a full bath dump (approximately 8,600 gallons), and sometimes they only do a half bath dump (approximately 4,500 gallons). The amount of bath dumped is a decision made by DVI management at the time of disposal. In either instance, the process takes about five labor hours to complete. DVI performed two bath dumps in 1999, and two in 2000. Since the number of bath dumps was the same for each year, there were no increases/decreases in O&M labor requirements based on bath dumps when RETEC is turned on versus when it is turned off.

The number of make-up chromic acid additions when the RETEC® system was off in 1999 was 49, and when it was on in 2000, there were 46 additions, a decrease of 6 percent. In regards to Fumetrol 140 Mist Suppressant make-up additions, in 1999 there were 31, and in 2000 there were 22, a decrease of 29 percent. At thirty minutes for a chromic acid addition, and twenty minutes for a mist suppressant addition, this translates to an annual savings of about 5 hours of O&M labor requirements. Net O&M labor requirements related to the operation of the RETEC® system are 140 – 5 = 135 hrs/yr. No additional O&M tasks were performed during the test period.

5.7 Chemical Use Analysis

From 3/20/99 to 1/3/00 (9.5 months), when the chromic acid anodizing purification unit was off-line, DVI used the following chemicals:

- Anodizing tank new bath creation chromic acid flake: 3,300 lbs.
- Anodizing tank new bath creation Fumetrol 140 Mist Suppressant: 16 gallons
- Anodizing tank make-up chromic acid flake: 5,710 lbs.
- Anodizing tank make-up Fumetrol 140 Mist Suppressant: 16 gallons

This period saw 1,346,149 Ah of anodizing being completed. This normalizes an average chemical consumption of 6.69 lbs. of chromic acid flake and .0234 gallons of mist suppressant per 1,000 Ah.

In 2000, from 1/3/00 to 9/6/00 (8 months), when the purification unit was on-line[1], DVI used the following chemicals:

- Anodizing tank new bath creation chromic acid flake: 3,300 lbs.
- Anodizing tank new bath creation Fumetrol 140 Mist Suppressant: 18 gallons

[1] The RETEC® system was off-line for a one month period (4/26/00 to 5/31/00) for an equipment design retrofit.

- Anodizing tank make-up chromic acid flake: 5,370 lbs.
- Anodizing tank make-up Fumetrol 140 Mist Suppressant: 13 gallons
- RETEC® system catholyte creation chromic acid flake: 85 lbs.
- RETEC® system catholyte make-up chromic acid flake: 127 pounds

This period saw 1,360,124 Ah of anodizing being completed. This normalizes to an average chemical consumption of 6.53 lbs. of chromic acid flake and .0228 gallons of mist suppressant per 1,000 Ah.

A comparison in chemical consumption results in a small decrease in chromic acid (0.16 lbs. per 1,000 Ah) and mist suppressant (0.0006 gallons per 1,000 Ah) when the RETEC® system is in operation. This translates to average annual chemical savings of 323 lbs. of chromic acid flake and 1.2 gallons of Fumetrol 140 Mist Suppressant.

5.8 Waste Generation Analysis

When the anodizing bath reaches its upper limit for aluminum contamination, it must be disposed of, and a fresh anodizing bath must formulated. Sometimes DVI does a full bath dump (approximately 8,600 gallons), and sometimes they only do a half bath dump (approximately 4,500 gallons). The amount of bath dumped is a decision made by DVI management at the time of disposal.

The purpose of the RETEC® system is to extend the anodizing bath life by removing the tramp metal contaminants from the anodizing bath and concentrating them in the catholyte, thus reducing the tramp metal contamination in the anodizing bath and extending its life. When the catholyte reaches its upper limit for metals contamination, and is no longer able to maintain the metals in solution, it must be sent for disposal (180 gallons) as well.

During the Baseline Mode, the RETEC® unit was turned off. The anodizing bath saw an overall increase of 0.9 g/L of aluminum over this period. Normalized to the amount of work measured in Ah during the Baseline Mode, this results in an average of 3.66 gallons of chromic acid waste accumulation per 1,000 Ah.

In the Operational Mode, the RETEC® unit was on. The anodizing bath saw an overall increase of 0.4 g/L of aluminum. Normalized to the amount of work measured in amp-hours (Ah) for the Operational Mode, this results in an average of 1.68 gallons of chromic acid waste accumulation per 1,000 Ah. The results are summarized in **Table 12**.

Date	Aluminum Contamination (g/L)	Anodizing Completed (Ah)	Total Aluminum Increase (g/L)	Waste Generation (gal/1,000 Ah)
09/14/00	3.6	227,103	0.9	3.66
10/19/00	4.5			
10/19/00	4.5	220,079	0.4	1.68
11/30/00	4.9			

Table 12. Results of Waste Generation Analysis

The difference in aluminum accumulation between the two periods, 1.98 gallons per 1,000 Ah, is the apparent contamination reduction as a direct result of the RETEC® system. At the total Ah of work performed during the Operational Mode, this translates to 220 k Ah x 1.68 = 370 gallons of chromic acid waste. However, we have to account for the added waste stream of the catholyte when the RETEC® system is in operation. In 2000, DVI had to dispose of the catholyte and clean the RETEC® unit four times, or once per quarter. The Operational Mode of the verification test was just under 1.5 months, so one-half (65 gallons) of a catholyte disposal/system cleaning will be accounted for in our waste generation calculations. Therefore the RETEC® system generated 65 gallons of additional chromic acid waste. Subtracting this from the waste disposal reduction of 370 gallons results in net savings of 305 gallons of chromic acid for the 1.5 month Operational Mode of the verification test, or about 2,440 gallons of chromic acid waste per year.

5.9 Cost Analysis

The capital cost of the RETEC® system was $35,230 (1993; includes $25,630 for the electrolytic cell, pumps, stand and clarifier, $8,000 for the rectifier, and $1,600 for installation costs).

Annual costs and savings associated with the chromic acid anodize solution purification operation are shown in **Table 13.** The operating costs of the RETEC® system are $53,676. The operating costs of the anodizing bath prior to installation of the RETEC® system were $61,964, resulting in net annual savings of $8,288. The simple payback period is 4.2 years (capital cost/net annual savings).

Since some cost items are normalized to the workload as measured in amp-hours (Ah) for each year, and the workload varies from year to year, the following table is based on a fictitious 2,000,000 Ah year. (According to DVI operation logs, Tank #9, where the RETEC® system is installed, saw 2,018,859 Ah in the year 2000).

Item	Prior to Installation of RETEC® System			After Installation of RETEC® System		
	Units	Unit Cost $/unit	Costs/yr (2M Ahr/yr) $	Units	Unit Cost $/unit	Costs/yr (2M Ahr/yr) $
Purification unit O&M labor (see section 5.5)	0	N/A	0	140 hrs.	10.00	1,400
Chromic acid anodizing tank maintenance O&M labor (see section 5.5)	35 hrs	10.00	350	30 hrs.	10.00	300
Chromic acid per 1,000 Ah (see section 5.7)	6.69 lbs.	1.31	17,528	6.53 lbs.	1.31	17,109
Fumetrol 140 mist suppressant per 1,000 Ah (see section 5.7)	0.0234 gal.	515	24,102	0.0228 gal.	515	23,484
Electricity for purification unit (see section 5.4)	0	-	0	6,366 kWh	0.09	573
Waste disposal fees per 1,000 Ah (see section 5.8)	3.66 gal.	2.73	19,984	1.98 gal.	2.73	10,810
Total Costs			**61,964**			**53,676**

Table 13. Annual Costs/Savings

5.10 Project Responsibilities/Audits

Verification testing activities and sample analysis were performed according to section 6.0 of the Verification Test Plan [Ref. 2].

There were two verification test audits conducted during the verification period for this technology. The first audit was an external EPA Technical Systems Audit (TSA) conducted by subcontractor, John H. Nicklas of Science Applications International Corporation on September 28, 2000. There were no Findings, two Observations and two Additional Technical Comments. All corrective actions were completed as instructed in the audit report issued by Mr. Nicklas.

The second audit conducted on this verification test was an internal *CTC* TSA conducted by Mr. Clinton Twilley, *CTC* QA Manager, on November 9, 2000. Mr. Twilley identified no Findings, three Observations and five Additional Technical Comments. All corrective actions were complete as of the end of the verification test.

6.0 REFERENCES

1. ELTECH International Corporation, *"RETEC® CP Model 6 Chrome Purification System Users Manual - Version 1.1."* March 1994.

2. Concurrent Technologies Corporation, "*Environmental Technology Verification Program for Metal Finishing Pollution Prevention Technologies Verification Test Plan, Evaluation of USFilter RETEC® Separated Cell Purification of Chromic Acid Anodize Bath Solution.*" September 13, 2000.

3. Concurrent Technologies Corporation, "*Environmental Technology Verification Program Metal Finishing Technologies Quality Management Plan*." December 9, 1998.

4. Durney, Lawrence J. (ed). Electroplating Engineering Handbook, 4th Edition, Chapman & Hall, London, UK, 1996.

5. Lenore S. Clesceri, Andrew D. Eaton, Arnold E. Greenberg (editors) Standard Methods for the Examination of Water and Wastewater, 20th Edition, American Public Health Association, and the Water Environment Federation, 1998.

6. Michael Murphy (ed). Metal Finishing 67th Guidebook and Directory Issue, Metal Finishing Magazine, Volume 97, Number 1, January 1999.

APPENDIX A

PRECISION CALCULATIONS

PRECISION CALCULATIONS

Laboratory ID	*CTC* ID	Parameter	Units	Sample Value	Duplicate Value	RPD %	RPD % Limits	RPD Met Y/N
L2002928-001	Batch Sample	Aluminum	mg/L	4.52	4.46	1	<30	Y
L2002928-001	Batch Sample	Chromium	mg/L	0.479	0.475	<1	<30	Y
L2002928-001	Batch Sample	Magnesium	mg/L	20.4	20.3	<1	<30	Y
L2002923-003	0914G-CC	Hex chrome	mg/L	88.9	89.6	<1	<30	Y
L2002923-005	0914H-CC	Hex chrome	mg/L	9.03	9.10	<1	<30	Y
N/A	0914F-CT	Hex chrome	g/L	46.57	50.02	7	<10	Y
N/A	0914F-CT	Total chrome	g/L	46.57	46.57	0	<10	Y
N/A	0914F-CTD	Hex chrome	g/L	47.43	49.15	4	<10	Y
N/A	0914F-CT	Total chrome	g/L	46.57	46.57	0	<10	Y
L2003022-006	0921H-M	Aluminum	mg/L	5.32	5.26	1	<30	Y
L2003022-006	0921H-M	Chromium	mg/L	3.76	3.75	<1	<30	Y
L2003022-006	0921H-M	Magnesium	mg/L	19.9	19.8	<1	<30	Y
L2003022-005	0921H-CC	Hex chrome	mg/L	7.75	7.70	<1	<30	Y
N/A	0921F-CT	Hex chrome	g/L	49.15	47.43	4	<10	Y
N/A	0921F-CT	Total chrome	g/L	48.29	47.43	2	<10	Y
L2003070-001	Batch Sample	Aluminum	mg/L	4.98	4.95	<1	<30	Y
L2003070-001	Batch Sample	Chromium	mg/L	0.480	0.480	0	<30	Y
L2003070-001	Batch Sample	Magnesium	mg/L	14.8	14.8	0	<30	Y
L2003089-005	0928H-CC	Hex chrome	mg/L	6.89	7.00	2	<30	Y
N/A	0928F-CT	Hex chrome	g/L	48.14	48.14	0	<10	Y
N/A	0928F-CT	Total chrome	g/L	49.02	49.02	0	<10	Y
L2003163-005	1005H-CC	Aluminum	mg/L	6.03	5.96	1	<30	Y
L2003163-005	1005H-CC	Chromium	mg/L	6.82	6.75	1	<30	Y
L2003163-005	1005H-CC	Magnesium	mg/L	20.6	20.5	<1	<30	Y
L2003163-005	1005H-CC	Hex chrome	mg/L	15.6	15.8	1	<30	Y
N/A	1005F-CT	Hex chrome	g/L	47.52	47.52	0	<10	Y
N/A	1005F-CT	Total chrome	g/L	47.52	47.52	0	<10	Y
L2003247-006	1012H-M	Aluminum	mg/L	5.83	5.85	<1	<30	Y
L2003247-006	1012H-M	Chromium	mg/L	7.60	7.57	<1	<30	Y
L2003247-006	1012H-M	Magnesium	mg/L	20.4	20.4	0	<30	Y
L2003247-005	1012H-CC	Hex chrome	mg/L	16.2	16.3	<1	<30	Y
N/A	1012F-CT	Hex chrome	g/L	50.52	50.52	0	<10	Y
N/A	1012F-CT	Total chrome	g/L	50.52	50.52	0	<10	Y
L2003308-007	1019H-CC	Aluminum	mg/L	6.37	6.37	0	<30	Y
L2003308-007	1019H-CC	Chromium	mg/L	7.15	7.30	2	<30	Y
L2003308-007	1019H-CC	Magnesium	mg/L	20.2	20.6	2	<30	Y
L2003308-007	1019H-CC	Hex chrome	mg/L	15.6	15.6	0	<30	Y
N/A	1019A-CT	Hex chrome	g/L	51.48	51.48	0	<10	Y
N/A	1019A-CT	Total chrome	g/L	51.48	51.48	0	<10	Y
N/A	1019A-CTD	Hex chrome	g/L	51.48	51.05	<1	<10	Y
N/A	1019A-CTD	Total chrome	g/L	51.48	51.48	0	<10	Y
N/A	1019B-CT	Hex chrome	g/L	20.59	20.59	0	<10	Y
N/A	1019B-CT	Total chrome	g/L	19.73	19.73	0	<10	Y
L2003388-008	1026H-M	Aluminum	mg/L	5.67	5.67	0	<30	Y
L2003388-008	1026H-M	Chromium	mg/L	4.61	4.62	<1	<30	Y
L2003388-008	1026H-M	Magnesium	mg/L	19.7	19.8	<1	<30	Y
L2003388-001	1026H-CC	Hex chrome	mg/L	8.35	8.34	<1	<30	Y
N/A	1026A-CT	Hex chrome	g/L	52.93	52.07	2	<10	Y
N/A	1026A-CT	Total chrome	g/L	52.50	52.07	<1	<10	Y
N/A	1026B-CT	Hex chrome	g/L	21.34	21.34	0	<10	Y
N/A	1026B-CT	Total chrome	g/L	21.34	21.34	0	<10	Y
N/A	1026B-CTD	Hex chrome	g/L	21.34	21.34	0	<10	Y
N/A	1026B-CTD	Total chrome	g/L	22.20	21.34	4	<10	Y
N/A	1026C-CT	Hex chrome	g/L	17.07	17.07	0	<10	Y
N/A	1026C-CT	Total chrome	g/L	17.07	17.07	0	<10	Y
L2003481-008	1102H-M	Aluminum	mg/L	5.52	5.42	2	<30	Y
L2003481-008	1102H-M	Chromium	mg/L	2.45	2.50	2	<30	Y

Laboratory ID	*CTC* ID	Parameter	Units	Sample Value	Duplicate Value	RPD %	RPD % Limits	RPD Met Y/N
L2003481-008	1102H-M	Magnesium	mg/L	19.3	19.6	2	<30	Y
L2003481-007	1102H-CC	Hex chrome	mg/L	6.68	6.70	<1	<30	Y
N/A	1102A-CT	Hex chrome	g/L	52.93	52.93	0	<10	Y
N/A	1102A-CT	Total chrome	g/L	52.93	52.07	2	<10	Y
N/A	1102B-CT	Hex chrome	g/L	23.05	22.20	4	<10	Y
N/A	1102B-CT	Total chrome	g/L	23.05	23.05	0	<10	Y
N/A	1102C-CT	Hex chrome	g/L	23.05	22.20	4	<10	Y
N/A	1102C-CT	Total chrome	g/L	22.20	21.34	4	<10	Y
N/A	1102C-CTD	Hex chrome	g/L	22.20	21.34	4	<10	Y
N/A	1102C-CTD	Total chrome	g/L	22.20	21.34	4	<10	Y
N/A	1102D-CT	Hex chrome	g/L	16.22	15.37	5	<10	Y
N/A	1102D-CT	Total chrome	g/L	16.22	15.37	5	<10	Y
L2003566-008	1109H-M	Aluminum	mg/L	5.25	5.10	3	<30	Y
L2003566-008	1109H-M	Chromium	mg/L	2.81	2.76	2	<30	Y
L2003566-008	1109H-M	Magnesium	mg/L	19.6	19.2	2	<30	Y
L2003566-007	1109H-CC	Hex chrome	mg/L	4.18	4.09	2	<30	Y
N/A	1109A-CT	Hex chrome	g/L	53.78	52.93	2	<10	Y
N/A	1109A-CT	Total chrome	g/L	53.78	53.78	0	<10	Y
N/A	1109B-CT	Hex chrome	g/L	36.71	35.85	2	<10	Y
N/A	1109B-CT	Total chrome	g/L	36.71	36.71	0	<10	Y
N/A	1109C-CT	Hex chrome	g/L	25.61	24.76	3	<10	Y
N/A	1109C-CT	Total chrome	g/L	25.61	25.61	0	<10	Y
L2003639-008	1116H-M	Aluminum	mg/L	5.69	5.66	<1	<30	Y
L2003639-008	1116H-M	Chromium	mg/L	5.96	5.85	2	<30	Y
L2003639-008	1116H-M	Magnesium	mg/L	21.2	20.8	2	<30	Y
L2003639-007	1116H-CC	Hex chrome	mg/L	9.41	9.22	2	<30	Y
N/A	1116A-CT	Hex chrome	g/L	53.78	53.78	0	<10	Y
N/A	1116A-CT	Total chrome	g/L	54.83	53.78	2	<10	Y
N/A	1116B-CT	Hex chrome	g/L	41.83	40.98	2	<10	Y
N/A	1116B-CT	Total chrome	g/L	43.54	42.68	2	<10	Y
N/A	1116C-CT	Hex chrome	g/L	25.61	25.61	0	<10	Y
N/A	1116C-CT	Total chrome	g/L	26.46	26.46	0	<10	Y
L2003756-008	1130H-M	Aluminum	mg/L	5.32	5.12	4	<30	Y
L2003756-008	1130H-M	Chromium	mg/L	4.03	3.84	4	<30	Y
L2003756-008	1130H-M	Magnesium	mg/L	20.6	19.8	4	<30	Y
L2003756-007	1130H-CC	Hex chrome	mg/L	7.68	7.66	<1	<30	Y
N/A	1130A-CT	Hex chrome	g/L	53.29	52.44	2	<10	Y
N/A	1130A-CT	Total chrome	g/L	53.29	52.44	2	<10	Y
N/A	1130B-CT	Hex chrome	g/L	51.60	51.60	0	<10	Y
N/A	1130B-CT	Total chrome	g/L	51.60	51.60	0	<10	Y
N/A	1130C-CT	Hex chrome	g/L	45.68	45.68	0	<10	Y
N/A	1130C-CT	Total chrome	g/L	46.52	45.66	2	<10	Y

APPENDIX B

ACCURACY CALCULATIONS

ACCURACY CALCULATIONS

CTC SAMPLE ID	Parameter	Units	Sample Value	Sample +Spike Value	Spike Value	Recovery %	Target % Recovery	Accuracy Met? Y/N
Batch Sample	Aluminum	mg/L	<0.2	4.52	5.00	90	75-125	Y
Batch Sample	Chromium	mg/L	<0.01	0.479	0.500	96	75-125	Y
Batch Sample	Magnesium	mg/L	15.6	20.4	5.00	96	75-125	Y
0914G-CC	Hex chrome	mg/L	43.3	88.9	50.0	91	75-125	Y
0914H-CC	Hex chrome	mg/L	4.31	9.03	5.00	94	75-125	Y
0914F-CT	Hex chrome	g/L	48.1	93.1	43.0	104	80-120	Y
0914F-CT	Total chrome	g/L	46.7	74.16	24.0	114	80-120	Y
0914F-CTD	Hex chrome	g/L	48.6	93.9	43.0	105	80-120	Y
0914F-CTD	Total chrome	g/L	46.7	73.30	24.0	110	80-120	Y
0921H-M	Aluminum	mg/L	0.32	5.32	5.00	100	75-125	Y
0921H-M	Chromium	mg/L	3.36	3.76	0.500	80	75-125	Y
0921H-M	Magnesium	mg/L	15.4	19.9	5.0	90	75-125	Y
0921H-CC	Hex chrome	mg/L	2.83	7.75	5.0	98	75-125	Y
0921F-CT	Hex chrome	g/L	48.1	91.4	43.0	100	80-120	Y
0921F-CT	Total chrome	g/L	48.1	71.37	24.0	97	80-120	Y
Batch Sample	Aluminum	mg/L	<0.2	4.98	5.00	100	75-125	Y
Batch Sample	Chromium	mg/L	<0.01	0.48	0.500	96	75-125	Y
Batch Sample	Magnesium	mg/L	9.87	14.8	5.0	99	75-125	Y
0928H-CC	Hex chrome	mg/L	1.86	6.89	5.0	101	75-125	Y
0928F-CT	Hex chrome	g/L	48.1	91.9	43.0	101	80-120	Y
0928F-CT	Total chrome	g/L	49.02	72.65	24.0	98	80-120	Y
1005H-CC	Aluminum	mg/L	1.07	6.03	5.00	99	75-125	Y
1005H-CC	Chromium	mg/L	6.29	6.82	0.500	106	75-125	Y
1005H-CC	Magnesium	mg/L	15.5	20.6	5.0	102	75-125	Y
1005H-CC	Hex chrome	mg/L	5.59	15.6	10.0	100	75-125	Y
1005F-CT	Hex chrome	g/L	47.5	90.7	43.0	100	80-120	Y
1005F-CT	Total chrome	g/L	47.52	71.72	24.0	100	80-120	Y
1012H-M	Aluminum	mg/L	0.73	5.83	5.00	102	75-125	Y
1012H-M	Chromium	mg/L	7.07	7.60	0.500	106	75-125	Y
1012H-M	Magnesium	mg/L	15.3	20.4	5.0	102	75-125	Y
1012H-CC	Hex chrome	mg/L	6.26	16.2	10.0	99	75-125	Y
1012F-CT	Hex chrome	g/L	50.5	94.0	43.0	101	80-120	Y
1012F-CT	Total chrome	g/L	50.5	74.0	24.0	97	80-120	Y
1019H-CC	Aluminum	mg/L	1.41	6.37	5.00	99	75-125	Y
1019H-CC	Chromium	mg/L	6.76	7.15	0.500	78	75-125	Y
1019H-CC	Magnesium	mg/L	15.5	20.2	5.0	94	75-125	Y
1019H-CC	Hex chrome	mg/L	5.77	15.6	10.0	98	75-125	Y
1019A-CT	Hex chrome	g/L	51.5	94.3	43.0	99	80-120	Y
1019A-CT	Total chrome	g/L	51.48	75.30	24.0	99	80-120	Y
1019A-CTD	Hex chrome	g/L	51.5	94.3	43.0	99	80-120	Y
1019A-CTD	Total chrome	g/L	51.48	74.65	24.0	96	80-120	Y
1019B-CT	Hex chrome	g/L	20.6	63.4	43.0	99	80-120	Y
1019B-CT	Total chrome	g/L	19.73	43.70	24.0	99	80-120	Y
1026H-M	Aluminum	mg/L	0.71	5.67	5.00	99	75-125	Y
1026H-M	Chromium	mg/L	4.14	4.61	0.500	94	75-125	Y
1026H-M	Magnesium	mg/L	14.9	19.7	5.0	96	75-125	Y
1026H-CC	Hex chrome	mg/L	3.57	8.35	5.0	96	75-125	Y
1026A-CT	Hex chrome	g/L	52.7	93.9	43.0	95	80-120	Y
1026A-CT	Total chrome	g/L	52.21	75.12	24.0	95	80-120	Y
1026B-CT	Hex chrome	g/L	21.3	64.0	43.0	99	80-120	Y
1026B-CT	Total chrome	g/L	21.34	45.24	24.0	99	80-120	Y
1026B-CTD	Hex chrome	g/l	21.3	64.0	43.0	99	80-120	Y
1026B-CTD	Total chrome	g/L	22.3	45.24	24.0	95	80-120	Y
1026C-CT	Hex chrome	g/L	17.1	59.7	43.0	99	80-120	Y
1026C-CT	Total chrome	g/L	17.07	40.98	24.0	99	80-120	Y
1102H-M	Aluminum	mg/L	0.31	5.52	5.00	104	75-125	Y
1102H-M	Chromium	mg/L	2.04	2.45	0.500	82	75-125	Y

CTC ID	Parameter	Units	Sample Value	Sample +Spike Value	Spike Value	Recovery %	Target % Recovery	RPD Met Y/N
1102H-M	Magnesium	mg/L	15.0	19.3	5.00	86	75-125	Y
1102H-CC	Hex chrome	mg/L	1.57	6.68	5.0	102	75-125	Y
1102A-CT	Hex chrome	g/L	52.9	96.0	43.0	100	80-120	Y
1102A-CT	Total chrome	g/L	52.84	75.98	24.0	96	80-120	Y
1102B-CT	Hex chrome	g/L	22.5	64.8	43.0	98	80-120	Y
1102B-CT	Total chrome	g/L	23.08	46.10	24.0	95	80-120	Y
1102C-CT	Hex chrome	g/L	22.5	64.0	43.0	96	80-120	Y
1102C-CT	Total chrome	g/L	21.91	44.39	24.0	93	80-120	Y
1102C-CTD	Hex chrome	g/L	21.9	64.0	43.0	97	80-120	Y
1102C-CTD	Total chrome	g/L	21.62	44.39	24.0	94	80-120	Y
1102D-CT	Hex chrome	g/L	15.9	58.8	43.0	99	80-120	Y
1102D-CT	Total chrome	g/L	15.65	38.42	24.0	94	80-120	Y
1109H-M	Aluminum	mg/L	0.55	5.25	5.00	94	75-125	Y
1109H-M	Chromium	mg/L	2.46	2.81	0.500	70[1]	75-125	Y
1109H-M	Magnesium	mg/L	15.5	19.6	5.00	82	75-125	Y
1109H-CC	Hex chrome	mg/L	1.66	4.18	2.50	101	75-125	Y
1109A-CT	Hex chrome	g/L	53.5	96.4	43.0	99	80-120	Y
1109A-CT	Total chrome	g/L	53.78	77.66	24.0	99	80-120	Y
1109B-CT	Hex chrome	g/L	36.1	78.5	43.0	98	80-120	Y
1109B-CT	Total chrome	g/L	36.71	60.61	24.0	99	80-120	Y
1109C-CT	Hex chrome	g/L	25.3	68.2	43.0	99	80-120	Y
1109C-CT	Total chrome	g/L	25.61	48.6	24.0	95	80-120	Y
1116H-M	Aluminum	mg/L	0.72	5.69	5.00	99	75-125	Y
1116H-M	Chromium	mg/L	5.53	5.96	0.500	86	75-125	Y
1116H-M	Magnesium	mg/L	16.4	21.2	5.00	96	75-125	Y
1116H-CC	Hex chrome	mg/L	4.61	9.41	5.0	96	75-125	Y
1116A-CT	Hex chrome	g/L	53.8	95.5	43.0	97	80-120	Y
1116A-CT	Total chrome	g/L	54.06	76.83	24.0	94	80-120	Y
1116B-CT	Hex chrome	g/L	41.5	83.6	43.0	97	80-120	Y
1116B-CT	Total chrome	g/L	43.25	67.44	24.0	100	80-120	Y
1116C-CT	Hex chrome	g/L	25.6	66.5	43.0	95	80-120	Y
1116C-CT	Total chrome	g/L	26.46	50.37	24.0	99	80-120	Y
1130H-M	Aluminum	mg/L	0.46	5.32	5.00	97	75-125	Y
1130H-M	Chromium	mg/L	3.60	4.03	0.500	86	75-125	Y
1130H-M	Magnesium	mg/L	16.1	20.6	5.00	90	75-125	Y
1130H-CC	Hex chrome	mg/L	3.06	7.68	5.0	92	75-125	Y
1130A-CT	Hex chrome	g/L	52.7	94.7	43.0	97	80-120	Y
1130A-CT	Total chrome	g/L	52.72	75.2	24.0	93	80-120	Y
1130B-CT	Hex chrome	g/L	51.6	93.8	43.0	98	80-120	Y
1130B-CT	Total chrome	g/L	51.60	75.28	24.0	98	80-120	Y
1130C-CT	Hex chrome	g/L	45.7	87.9	43.0	98	80-120	Y
1130C-CT	Total chrome	g/L	46.52	69.36	24.0	95	80-120	Y

[1]Accuracy results for this sample may be skewed due to relatively high concentration of sample analyte compared to the spike concentration. The Laboratory Control Sample (LCS) was acceptable (91 percent), therefore, the data was approved. All remaining accuracy checks for metals were within the goal of 75-125 percent.

APPENDIX C

REPRESENTATIVENESS CALCULATIONS

REPRESENTATIVENESS CALCULATIONS

CTC ID SAMPLE	Aluminum (EPA 6010B)	Chromium (EPA 6010B)	Magnesium (EPA 6010B)	Hex Chrome (Titration)	Tri Chrome (Titration)	Hex Chrome (SM-3500 CrD)	Tri Chrome (SM-3500 CrD)
0914F-M	3.6	49.0	0.27	-	-	-	-
0914F-MD	4.2	53.0	0.26	-	-	-	-
% Difference	-14.3	-7.5	3.7	-	-	-	-
0914F-CT	-	-	-	48.0	<1.1	-	-
0914F-CTD	-	-	-	48.6	<1.1	-	-
% Difference	-	-	-	-1.2	0.0	-	-
0921G-M	0.0026	0.031	0.015	-	-	-	-
0921G-MD	0.0027	0.032	0.016	-	-	-	-
% Difference	-3.7	-3.1	-6.2	-	-	-	-
0921G-CC	-	-	-	-	-	0.034	ND
0921G-CCD	-	-	-	-	-	0.035	ND
% Difference	-	-	-	-	-	-2.9	0.0
0928H-M	0.0004	0.0021	0.015	-	-	-	-
0928H-MD	0.0004	0.0021	0.015	-	-	-	-
% Difference	0.0	0.0	0.0	-	-	-	-
0928H-CC	-	-	-	-	-	0.0019	0.00035
0928H-CCD	-	-	-	-	-	0.0018	0.00036
% Difference	-	-	-	-	-	5.3	-7.9
1019A-M	4.5	46.0	0.32	-	-	-	-
1019A-MD	4.3	45.0	0.27	-	-	-	-
% Difference	4.8	2.2	16.0	-	-	-	-
1019A-CT	-	-	-	51.5	<1.1	-	-
1019A-CTD	-	-	-	51.3	<1.1	-	-
% Difference	-	-	-	0.4	0.0	-	-
1026B-M	2.0	20.0	0.12	-	-	-	-
1026B-MD	2.0	19.0	0.12	-	-	-	-
% Difference	0.0	5.0	0.0	-	-	-	-
1026B-CT	-	-	-	21.3	<1.1	-	-
1026B-CTD	-	-	-	21.3	<1.1	-	-
% Difference	-	-	-	0.0	0.0	-	-
1102C-M	2.6	20.0	0.13	-	-	-	-
1102C-MD	2.3	18.0	0.12	-	-	-	-
% Difference	11.5	10.0	7.7	-	-	-	-
1102C-CT	-	-	-	22.5	<1.1	-	-
1102C-CTD	-	-	-	21.9	<1.1	-	-
% Difference	-	-	-	2.7	0.0	-	-