Final Version

SRI/USEPA-GHG-QAP-41
March 2007

Test and Quality Assurance Plan

FuelCell Energy, Inc. - DFC 300A Molten Carbonate Fuel Cell Combined Heat and Power System

Prepared by:

Greenhouse Gas Technology Center

Operated by
Southern Research Institute

Under a Cooperative Agreement With
U.S. Environmental Protection Agency

and

Under Agreement With
New York State Energy Research and Development Authority

EPA REVIEW NOTICE

This report has been peer and administratively reviewed by the U.S. Environmental Protection Agency, and approved for publication. Mention of trade names or commercial products does not constitute endorsement or recommendation for use.

Final Version

SRI/USEPA-GHG-QAP-41
March 2007

Greenhouse Gas Technology Center

A U.S. EPA Sponsored Environmental Technology Verification (ETV) Organization

Test and Quality Assurance Plan

FuelCell Energy, Inc. - DFC 300A Molten Carbonate Fuel Cell Combined Heat and Power System

Prepared by:
Greenhouse Gas Technology Center
Southern Research Institute
3000 Aerial Center Parkway, Suite 160
Morrisville, NC 27560 USA
Telephone: 919-806-3456

Reviewed by:
New York State Energy Research and Development Authority ☒
Fuel Cell Energy, LLC. ☒
U.S. EPA Office of Research and Development QA Team ☒

☒ indicates comments are integrated into TQAP

(this page intentionally left blank)

Greenhouse Gas Technology Center

A U.S. EPA Sponsored Environmental Technology Verification (ETV) Organization

Test and Quality Assurance Plan
FuelCell Energy, Inc. - DFC 300A Molten Carbonate Fuel Cell Combined Heat and Power System

This Test and Quality Assurance Plan has been reviewed and approved by the Greenhouse Gas Technology Center Project Manager and Center Director, the U.S. EPA APPCD Project Officer, and the U.S. EPA APPCD Quality Assurance Manager.

Signed	3/07	Signed	3/07
Richard Adamson Co-Director Greenhouse Gas Technology Center Southern Research Institute	Date	David Kirchgessner APPCD Project Officer U.S. EPA	Date
Signed	3/07		
Staci Haggis Project Manager Greenhouse Gas Technology Center Southern Research Institute	Date	Robert Wright APPCD Quality Assurance Manager U.S. EPA	Date
Signed	3/07		
Eric Ringler Quality Assurance Manager Greenhouse Gas Technology Center Southern Research Institute	Date		

TQAP Final: March 2007

(this page intentionally left blank)

TABLE OF CONTENTS

Page

APPENDICES ii
LIST OF FIGURES ii
LIST OF TABLES ii
DISTRIBUTION LIST iii

1.0 INTRODUCTION 1-1
1.1 BACKGROUND 1-1
1.2 FUELCELL ENERGY DFC 300A TECHNOLOGY DESCRIPTION 1-2
1.3 TEST FACILITY DESCRIPTION 1-3
1.4 ORGANIZATION AND RESPONSIBILITIES 1-4
1.5 SCHEDULE 1-6

2.0 VERIFICATION APPROACH 2-1
2.1 SYSTEM BOUNDARY 2-1
2.2 VERIFICATION PARAMETERS 2-2
2.2.1 Electrical Performance (GVP §2.0) 2-3
2.2.2 Electrical Efficiency (GVP §3.0) 2-3
2.2.3 CHP Thermal Performance (GVP §4.0) 2-4
2.2.4 Emissions Performance (GVP §5.0) 2-4
2.2.5 Field Test Procedures and Site Specific Instrumentation 2-5
2.2.6 Estimated NO_X and CO_2 Emission Offsets 2-9

3.0 DATA QUALITY OBJECTIVES 3-11

4.0 DATA ACQUISITION, VALIDATION, AND REPORTING 4-1
4.1 DATA ACQUISITION AND DOCUMENTATION 4-1
4.1.1 Corrective Action and Assessment Reports 4-1
4.2 DATA REVIEW, VALIDATION, AND VERIFICATION 4-2
4.3 INSPECTION/ACCEPTANCE OF SUPPLIES, CONSUMABLES, AND SERVICES 4-3
4.4 DATA QUALITY OBJECTIVES RECONCILIATION 4-3
4.5 ASSESSMENTS AND RESPONSE ACTIONS 4-3
4.5.1 Project Reviews 4-3
4.5.2 Test/QA Plan Implementation Assessment 4-4
4.5.3 Audit of Data Quality 4-4
4.6 VERIFICATION REPORT AND STATEMENT 4-4
4.7 TRAINING AND QUALIFICATIONS 4-5
4.8 HEALTH AND SAFETY REQUIREMENTS 4-6

5.0 REFERENCES 5-1

APPENDICES

Page

APPENDIX A Electric Power System Emissions Reduction Estimates A-1
APPENDIX B Heat Recovery System Emissions Reduction Estimates.....B-1

LIST OF FIGURES

Figure 1-1. The FuelCell Energy DFC 300A at SUNY-ESF 1-4
Figure 1-2. Project Organization..... 1-5
Figure 2-1. FuelCell Energy DFC 300A System Boundary Diagram..... 2-2
Figure 2-2. Location of Test Instrumentation for SUT Electrical System 2-8
Figure 2-3. Location of Test Instrumentation for SUT Thermal System..... 2-8

LIST OF TABLES

Table 1-1. FuelCell Energy DFC 300A Specifications..... 1-2
Table 2-1. Site Specific Instrumentation for DFC 300A System Verification 2-7

DISTRIBUTION LIST

New York State Energy Research and Development Authority
James Foster
Mark Torpey

FuelCell Energy, Inc.
Patrick Tong

SUNY-ESF
Gary Colella

U.S. EPA – Office of Research and Development
David Kirchgessner
Robert Wright

Southern Research Institute (GHG Center)
Richard Adamson
Bill Chatterton
Staci Haggis
Eric Ringler

(this page intentionally left blank)

1.0 INTRODUCTION

1.1 BACKGROUND

The U.S. Environmental Protection Agency's Office of Research and Development (EPA-ORD) operates the Environmental Technology Verification (ETV) program to facilitate the deployment of innovative technologies through performance verification and information dissemination. The goal of the ETV program is to further environmental protection by substantially accelerating the acceptance and use of improved and innovative environmental technologies. Congress funds ETV in response to the belief that there are many viable environmental technologies that are not being used for the lack of credible third-party performance data. With performance data developed under this program, technology buyers, financiers, and permitters in the United States and abroad will be better equipped to make informed decisions regarding environmental technology purchase and use.

The Greenhouse Gas Technology Center (GHG Center) is one of six verification organizations operating under the ETV program. The GHG Center is managed by EPA's partner verification organization, Southern Research Institute (Southern), which conducts verification testing of promising GHG mitigation and monitoring technologies. The GHG Center's verification process consists of developing verification protocols, conducting field tests, collecting and interpreting field and other data, obtaining independent peer-review input, and reporting findings. Performance evaluations are conducted according to externally reviewed verification Test and Quality Assurance Plans (TQAPs) and established protocols for quality assurance (QA).

The GHG Center is guided by volunteer groups of stakeholders. The GHG Center's Executive Stakeholder Group consists of national and international experts in the areas of climate science and environmental policy, technology, and regulation. It also includes industry trade organizations, environmental technology finance groups, governmental organizations, and other interested groups. The GHG Center's activities are also guided by industry specific stakeholders who provide guidance on the verification testing strategy related to their area of expertise and peer-review key documents prepared by the GHG Center.

In recent years, a primary area of interest to GHG Center stakeholders has been distributed electrical power generation systems. Distributed generation (DG) refers to equipment, typically ranging from 5 to 1,000 kilowatts (kW) that provide electric power at a site closer to customers than central station generation. A distributed power unit can be connected directly to the customer or to a utility's transmission and distribution system. Examples of technologies available for DG includes gas turbine generators, internal combustion engine generators, photovoltaics, wind turbines, fuel cells, and microturbines. DG technologies provide customers one or more of the following main services: standby generation, peak shaving generation, baseload generation, or cogeneration.

Since 2002, the GHG Center and the New York State Energy Research and Development Authority (NYSERDA) have collaborated and shared the cost of verifying several new DG technologies throughout the state of New York under NYSERDA-sponsored programs. The verification described in this document will evaluate the performance of one such DG system: a Model DFC 300A molten carbonate fuel cell combined heat and power (CHP) system manufactured by FuelCell Energy, Inc (FCE). The DFC 300A CHP system is installed at the State University of New York – College of Environmental Science and Forestry (SUNY-ESF) located in Syracuse, New York. The GHG Center will be evaluating the performance of this system in collaboration with NYSERDA.

In October 2004 the GHG Center published the Generic Verification Protocol (GVP) for Distributed Generation and Combined Heat and Power Field Testing [1]. The GVP is designed specifically for microturbine and IC engine based CHP systems. However, the approaches and methodologies specified in the GVP have been successfully applied to other ETV fuel cell verifications by the GHG Center, so this ETV performance verification will be based on the GVP. This document is the site specific TQAP for this performance verification. This TQAP does not repeat the rationale for the selection of verification parameters, the verification approach, data quality objectives (DQOs), and Quality Assurance/Quality Control (QA/QC) procedures specified in the GVP. Instead, this plan includes descriptions of the FCE DFC 300A system, its integration at SUNY-ESF, site specific measurements and instrumentation, and site specific exceptions to the GVP. This performance verification will include evaluation of the following parameters:

- electrical performance
- electrical efficiency
- CHP performance
- atmospheric emissions
- NO_X and CO_2 emission offsets

This TQAP has been reviewed by NYSERDA, FCE, and the EPA QA team. Once approved, as evidenced by the signature sheet at the front of this document, it will meet the requirements of the GHG Center's Quality Management Plan (QMP) and thereby satisfy the ETV QMP requirements and conform to EPA's standard for environmental testing. This TQAP has been prepared to guide implementation of the test and to document planned test operations. Once testing is completed, the GHG Center will prepare a Technology Verification Report and Verification Statement, which will first be reviewed by NYSERDA and FCE. Once all comments are addressed, the report will be reviewed by the EPA QA team. Once completed, the GHG Center Director and the EPA Laboratory Director will sign the Verification Statement, and the final Report will be posted on the Web sites maintained by the GHG Center (www.sri-rtp.com) and ETV program (www.epa.gov/etv).

1.2 FUELCELL ENERGY DFC 300A TECHNOLOGY DESCRIPTION

The FuelCell Energy DFC 300A is a natural gas fueled molten carbonate fuel cell (MCFC) from which excess heat is recovered for use on-site. This technology provides a maximum 250 kW electrical output at 480v three phase in parallel with the utility supply. Some of the waste heat produced by the fuel cell is recovered from the exhaust gases and supplied to the host sites' space heating system. Table 1-1 summarizes the physical and electrical specifications for the unit.

Table 1-1. FuelCell Energy DFC 300A Specifications

(Source: FuelCell Energy, Inc.)

Physical Specifications	Width	9.0 ft
	Length	28.1 ft
	Height	10.5 ft
	Weight	90,002 lb
Electrical Specifications	Electrical Input	Interconnection of DC conversion + inverter
	Electrical Output	250 kW, 480 V, three phase; decline 10 % over 3 years
	Generator Type	Solid state inverter
	Power Generating Efficiency	45 % ; decline 4.5 % over 3 years
	Waste Heat Recovery Efficiency	60 – 80 %

MCFCs use an electrolyte composed of a molten mixture of carbonate salts. Two mixtures are currently used: lithium carbonate and potassium carbonate, or lithium carbonate and sodium carbonate. To melt the carbonate salts and achieve high ion mobility through the electrolyte, MCFCs operate at high temperatures (nominal 1202 ºF).

When heated to a temperature of around 1202 ºF, these salts melt and become conductive to carbonate ions (CO_3^{2-}). These ions flow from the cathode to the anode where they combine with hydrogen to give water, carbon dioxide and electrons. These electrons are routed through an external circuit back to the cathode, generating electricity and by-product heat.

Anode Reaction: $CO_3^{2-} + H_2 \Rightarrow H_2O + CO_2 + 2e^-$

Cathode Reaction: $CO_2 + \frac{1}{2}O_2 + 2e^- \Rightarrow CO_3^{2-}$

Overall Cell Reaction: $H_2(g) + \frac{1}{2}O_2(g) + CO_2\ (\text{cathode}) \Rightarrow H_2O(g) + CO_2\ (\text{anode})$

The higher operating temperature of MCFCs has both advantages and disadvantages compared to the lower temperature phosphoric acid fuel cells and polymer electrolyte fuel cells. At the higher operating temperature, fuel reforming of natural gas can occur internally, eliminating the need for an external fuel processor. Additional advantages include the ability to use standard materials for construction, such as stainless steel sheet, and allowing the use of nickel-based catalysts on the electrodes. The by-product heat from an MCFC can be used to generate high-pressure steam that can be used in many industrial and commercial applications.

The high temperatures and the electrolyte chemistry also have disadvantages. The high temperature requires significant time to reach operating conditions and responds slowly to changing power demands. These characteristics make MCFCs more suitable for constant power applications. The carbonate electrolyte can also cause electrode corrosion problems. Furthermore, since CO_2 is consumed at the anode and transferred to the cathode, introduction of CO_2 and its control in air stream becomes an issue for achieving optimum performance that is not present in any other fuel cell.

1.3 TEST FACILITY DESCRIPTION

The performance verification of the DFC 300A will take place at the SUNY-ESF, located in Syracuse, New York. The DFC-300A is located outdoors next to Walters Hall on the SUNY-ESF campus. Electric service is provided by the New York Power Authority (NYPA). The DFC 300A provides a 250 kW electrical output to the building in parallel with the utility supply. It is also used to provide supplemental water heating for a reheat loop in Walters Hall's air distribution system. The reheat loop helps control room temperature in Walters Hall.

The fuel cell is fueled with natural gas provided by National Grid. Hot exhaust gases exiting the fuel cell are directed to a Cain Industries heat recovery unit. If the water temperature in the reheat loop from Walters Hall is sufficiently high (approximately 155 ^{o}F or more), a valve in the heat recovery unit vents the exhaust gas to atmosphere. When reheat loop temperatures are below approximately 155 ^{o}F, the exhaust gas from the fuel cell is directed through a heat exchanger and heats the water in the reheat loop. A 1 hp pump located in Walters Hall circulates water through the reheat loop. Site personnel indicate that, in some cases, DFC 300A heat recovery rates exceed Walters Hall demand, necessitating venting.

The unit is located outdoors next to Walters Hall on the SUNY-ESF campus. Figure 1-1 shows the DFC 300A as it is currently installed.

Figure 1-1. The FuelCell Energy DFC 300A at SUNY-ESF

1.4 ORGANIZATION AND RESPONSIBILITIES

Figure 1-2 presents the project organization chart. The following section discusses functions, responsibilities, and lines of communications for the verification test participants.

Southern's GHG Center has overall responsibility for planning and ensuring the successful implementation of this verification test. The GHG Center will ensure that effective coordination occurs, schedules are developed and adhered to, effective planning occurs, and high-quality independent testing and reporting occur.

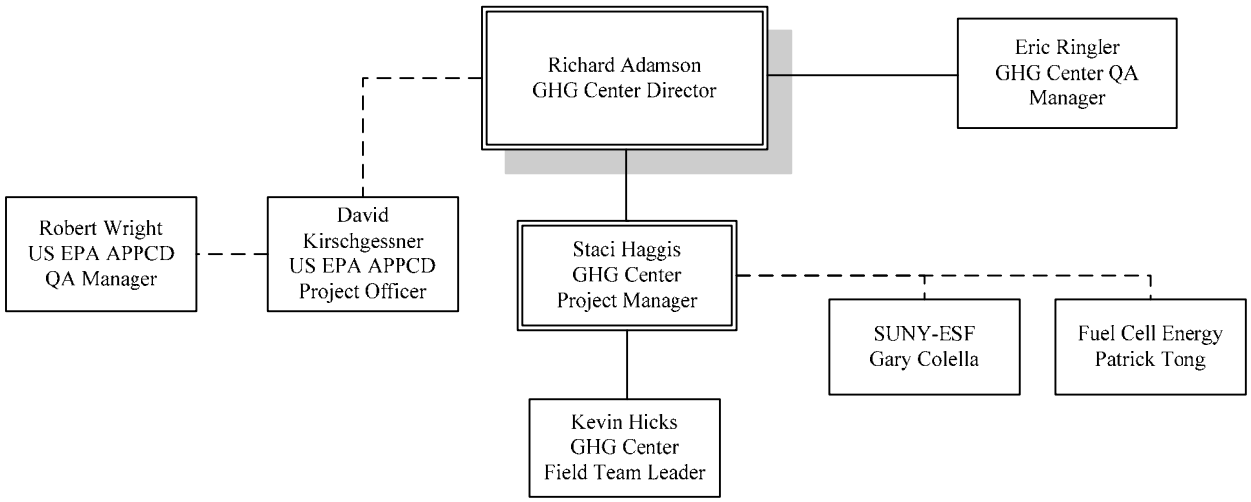

Figure 1-2. Project Organization

Richard Adamson is the GHG Center Co-Director. He will ensure the staff and resources are available to complete this verification as defined in this TQAP. He will review the TQAP and Report to ensure they are consistent with ETV operating principles. He will oversee the activities of the GHG Center staff, and provide management support where needed. Mr. Adamson will sign the Verification Statement along with the EPA-ORD Laboratory Director.

Staci Haggis will serve as the Project Manager for the GHG Center. Her responsibilities include:

- drafting the TQAP and verification report;
- overseeing the field team leader's data collection activities, and
- ensuring that data quality objectives are met prior to completion of testing.

The project manager will have full authority to suspend testing should a situation arise that could affect the health or safety of any personnel. She will also have the authority to suspend testing if the data quality indicator goals are not being met. She may resume testing when problems are resolved in both cases. She will be responsible for maintaining communication with FCE, NYSERDA, and EPA. She also oversees and manages subcontractor activities and submittals.

Kevin Hicks will serve as the Field Team Leader. Mr. Hicks will provide field support for activities related to all measurements and data collected. He will install and operate the measurement instruments, supervise and document activities conducted by the emissions testing contractor, collect gas samples and coordinate sample analysis with the laboratory, and ensure that QA/QC procedures outlined in this TQAP are followed, including QA requirements for field subcontractors. He will submit all results to the Project Manager, such that it can be determined that the DQOs are met.

Southern's QA Manager, Eric Ringler, is responsible for ensuring that all verification tests are performed in compliance with the QA requirements of the GHG Center QMP, the GVP, and this TQAP. He has reviewed and is familiar with each of these documents. He will also review the verification test results and ensure that applicable internal assessments are conducted as described in these documents. He will reconcile the DQOs at the conclusion of testing and will conduct or supervise an audit of data quality. He is also responsible for review and validation of subcontractor activities, review of subcontractor generated data, and confirmation that subcontractor QA/QC requirements are met. Mr. Ringler will report all

internal reviews, DQO reconciliation, the audit of data quality, and any corrective action results directly to the GHG Center Director, who will provide copies to the project manager for corrective action as applicable and citation in the final verification report. He will review and approve the final verification report and statement. He is administratively independent from the GHG Center Director and maintains stop work authority.

Patrick Tong of FCE and Gary Colella of SUNY-ESF will serve as the primary contact persons for the DFC 300A verification team. They will provide technical assistance, assist in the installation of measurement instruments, and coordinate operation of the cogeneration system at the test site. They will ensure the units are available and accessible to the GHG Center for the duration of the test. They will also review the TQAP and Reports and provide written comments.

EPA-ORD will provide oversight and QA support for this verification. The APPCD Project Officer, Dr. David Kirchgessner, is responsible for obtaining final approval of the TQAP and Report. The APPCD QA Manager reviews and approves the TQAP and the final Report to ensure they meet the GHG Center QMP requirements and represent sound scientific practices.

1.5 SCHEDULE

The tentative schedule of activities for testing is:

Verification TQAP Development	
GHG Center Internal Draft Development	September – December, 2006
NYSERDA, FCE, and SUNY-ESF Review/Revision	December 11, 2006 – January 5, 2007
EPA Review/Revision	January 12 – January 31, 2007
Final TQAP Posted	February 15, 2007
Verification Testing and Analysis	
Measurement Instrument Installation/Shakedown	March, 2007
Field Testing	March, 2007
Data Validation and Analysis	April, 2007
Verification Report Development	
GHG Center Internal Draft Development	April, 2007
NYSERDA, PPL, and FCE Review/Revision	May, 2007
EPA Review/Revision	June, 2007
Final Report Posted	July, 2007

2.0 VERIFICATION APPROACH

This performance verification will be conducted following the guidelines and procedures specified in the GVP. This TQAP includes site-specific information including the following:

- Definition of the system under test (SUT) boundary for this verification - **§2.1**,
- Summary of the FCE DFC 300A verification parameters and references to the applicable measurements, procedures, and calculations from the GVP - **§2.2**, and
- Site specific instrumentation - **§2.3**.

Following the GVP, the verification will include evaluation of the DFC 300A system performance over a series of controlled test periods. The GVP specifies controlled tests be conducted at three different loads including 100, 75, and 50 percent of capacity. The fuel cell is capable of operating at these loads so this approach will be followed and tests will be conducted at nominal power outputs of 250, 188, and 125 kW. The load will be controlled remotely by FCE. They can command different power loads offsite based on site demand. Procedures related to the load tests are summarized in §2.2.5 of this TQAP and detailed in §7.1 through §7.4 of the GVP. In addition to the controlled test periods, the GHG Center will collect sufficient data to characterize the DFC 300A system's performance over normal facility operations. This will include up to 2 weeks of continuous monitoring of fuel consumption, power generation, power quality, and heat recovery rates.

2.1 SYSTEM BOUNDARY

The DFC 300A verification will be limited to the performance of the system under test (SUT) within a defined system boundary. Figure 2-1 illustrates the SUT boundary for this verification.

The figure indicates two distinct boundaries. The device under test (DUT) or product boundary includes the DFC 300A unit selected for this test including all of its internal components. The SUT includes the DUT as well as parasitic loads present in this application: a water circulation pump for the reheat loop and a domestic cold water booster pump to boost the building's water pressure to satisfy the requirements of the fuel cell. Following the GVP, this verification will incorporate the system boundary into the performance evaluation. The parasitic load will be verified to determine the overall system electrical and thermal efficiency for this installation.

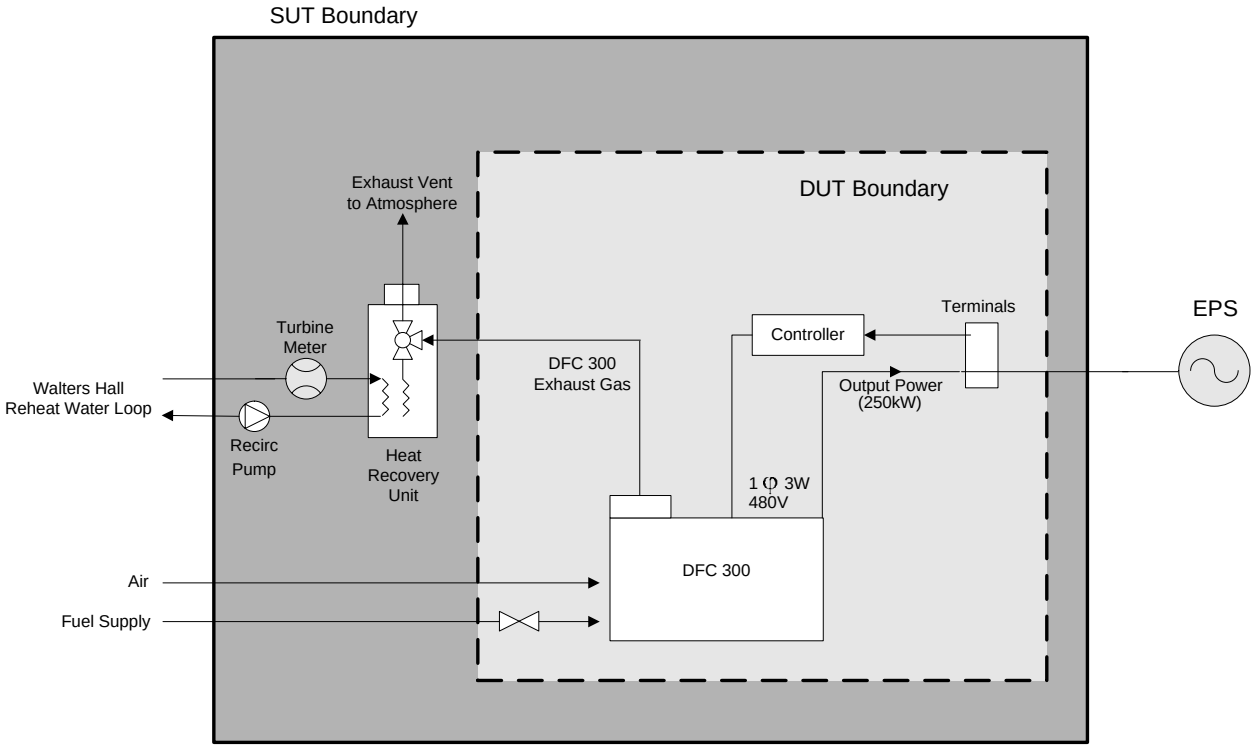

Figure 2-1. FuelCell Energy DFC 300A System Boundary Diagram

2.2 VERIFICATION PARAMETERS

The defined SUT will be tested to determine performance for the following verification parameters:

- Electrical Performance
- Electrical Efficiency
- CHP Thermal Performance
- Emissions Performance
- NO_X and CO_2 Emission Offsets

The test sequences and durations will follow the guidelines specified in GVP §1.3. There will be three separate one-hour test runs conducted at each load setting. Permissible measurement variability criteria for fuel cells are not included in the protocol but are available in The American Society of Mechanical Engineers (ASME) Performance Test Code for Fuel Cell Power Systems, PTC-50 [2].

The current version of the GVP does not include procedures for verification of estimated of NO_X and greenhouse gas (CO_2) emissions reductions realized through use of the cogeneration system at this test location. The approach and methodology for these estimations are provided in §2.2.6 and Appendices A and B of this test plan.

The following sections identify the sections of the protocol that are applicable to the verification parameters for this test, identify site specific instrumentation (Table 2-1), and specify any exceptions or deviations.

2.2.1 Electrical Performance (GVP §2.0)

Determination of electrical performance will be conducted following §2.0 and Appendix D1.0 of the GVP. The following parameters will be measured:

- Real power, kW
- Apparent power, kVA
- Reactive power, kVAR
- Power factor, %
- Voltage total harmonic distortion, %
- Current total harmonic distortion, %
- Frequency, Hz
- Voltage, V
- Current, A

The verification parameters will be measured with a digital power meter manufactured by Power Measurements Ltd. (Model 7500 or 7600 ION). The meter scans all power parameters once per second and computes and records one-minute averages. An electrician will install the power meter on the DFC 300A cogeneration unit. The meter will operate continuously, unattended, and will not require further adjustments after installation. The rated accuracy of the power meter is ± 0.1 %, and the rated accuracy of the current transformers (CTs) needed to employ the meter at this site is ± 1.0 %. Overall power measurement error is then ± 1.0 %.

2.2.2 Electrical Efficiency (GVP §3.0)

Determination of electrical efficiency will be conducted following §3.0 and Appendix D2.0 of the GVP. The following parameters will be measured:

- Real power production, kW
- External parasitic load power consumption, kW
- Ambient temperature, ^{o}F
- Ambient barometric pressure, psia
- Fuel LHV, Btu/scf
- Fuel consumption, scfh

Real power production will be measured by the Power Measurements Ltd. digital power meter, as described in §2.2.1 above. External parasitic load consumption may also be measured by a Power Measurements Ltd. digital power meter or, alternatively, the field team leader may use a Fluke Model 336 clamp on power meter. The Fluke meter has rated accuracies of 2% of reading for current and 1% of reading for voltage.

Ambient temperature will be recorded on a data logger from a single Class A 4-wire platinum resistance temperature detector (RTD). The specified accuracy of the RTD will be ± 0.6 ^{o}F. Ambient barometric pressure will be measured by an Omega model PX205 pressure transducer with a range of 0 – 30 psia and an accuracy of ± 0.25 % FS.

Gas flow will be measured by a Model 3M175 Series B3 Roots Meter manufactured by Dresser, Inc., already installed at the site. The meter has a specified accuracy of ± 1 % of reading. Test personnel will manually record readings from the meter on 10 – 15 minute intervals during the controlled test periods. During the continuous monitoring period, SUNY-ESF personnel will manually record readings twice a

day. Test personnel will periodically measure gas temperature with a handheld Fluke 52 Type K thermocouple. The specified accuracy of the thermocouple is ± 1 ^{o}F. Gas pressure will be periodically recorded from a pressure gauge that is already installed at the site.

At least three gas samples will be taken in conjunction with the load tests. Samples will be collected in stainless steel canisters supplied by subcontractor Empact Analytical of Brighton, Colorado. The samples will be shipped to Empact Analytical for LHV analysis according to ASTM Method 1945. The QA Manager will confirm that the subcontractor satisfies the required QA elements of the method.

2.2.3 CHP Thermal Performance (GVP §4.0)

Determination of CHP thermal performance will be conducted following §4.0 and Appendix D3.0 of the GVP. The following parameters will be quantified:

- Thermal performance in heating service, Btu/h
- Thermal efficiency in heating service, %
- Actual SUT efficiency in heating service as the sum of electrical and thermal efficiencies, %

To quantify these parameters, heat recovery rate from the DUT will be measured on the reheat loop and defined as the heat delivered to the facility. Water flow rate will be logged from the Istec Model 1820 turbine flow meter that is currently installed at the site. A data logger will log a pulse output from the meter. Class A 4-wire platinum RTDs will be used to determine the fluid supply and return temperatures. The specified accuracy of the RTDs, including an Agilent / HP Model 34970A or equivalent data logger, is ± 0.6 °F. Pretest calibrations will document the RTD performance.

2.2.4 Emissions Performance (GVP §5.0)

Determination of emissions performance will be conducted following §5.0 and Appendix D4.0 of the GVP. This verification will include emissions of NO_X, CO, CO_2, NMHC, and THC. Emissions testing will be performed by GHG Center personnel.

GHG Center personnel will measure CO and CO_2 using a portable emissions monitoring system (PEMS). The PEMS is a Horiba OBS-2200 system, which is essentially a miniaturized laboratory analyzer bench which has been optimized for portable use. The instrument meets or exceeds Title 40 CFR 1065 requirements for in-use field testing of engine emissions.

This PEMS is suitable for testing a wide variety of stationary sources as well as the mobile sources for which it is intended. Accuracy for all analytes is better than ± 2.5 % full scale (FS), while linearity is better than ± 1.0 % FS. Exhaust gas concentrations must be integrated with exhaust gas flow rates to yield mass emission rates or brake-specific emissions. EPA Method 2 will be used to determine exhaust gas volumetric flow rates.

Response times for all OBS-2200 analyzers are approximately 2 seconds alone and 5 seconds with the heated umbilical in the sample line. Test personnel establish exact analyzer response times prior to testing. Software algorithms then align analyzer data outputs with other sensor signals, such as exhaust gas flow and engine control module data. Resolution depends on the analyzer range setting, but is between 4 and 5 significant digits.

The OBS-2200 measures CO and CO_2 with non-dispersive infra-red (NDIR) detectors. It does not require a separate moisture removal system for the CO and CO_2 NDIR detectors.

The expected range of measurement for NOx is less than 1 ppm. This level is below the resolution of the OBS-2200, so the OBS-2200 will not be used for NOx measurement. Instead, a slipstream of sample gas will be directed to a Teledyne/API 200A (or equivalent) NOx Analyzer to detect NOx at low levels. The instrument will be operated on a full scale range of 0 to 10 ppm. Accuracy of the instrument is ± 0.5 % of reading.

A California Analytical Instruments Model 600 FID/HFID Total Hydrocarbon Analyzer, or equivalent, will be used to monitor NMHC, and THC emissions on a range of 0 to 50 ppm. This measurement method corresponds to the system specified in Title 40 CFR 60 Appendix A, Method 25A, "Determination of Total Gaseous Nonmethane Organic Emissions as Carbon", which is a reference method for THC. This analyzer also uses a carbon based sample splitter to quantify NMHC as well. Both THC and NMHC emissions will be reported. Accuracy of the instrument is ± 0.5 % full scale.

The PEMS sample probe will be inserted into the DFC 300A's 12-inch diameter exhaust stack. GHG Center or site personnel will need to install a port for the sample probe in the exhaust stack prior to testing. The PEMS sample pump conveys all samples through a heated umbilical directly to heated analyzer sections, which eliminates the need to remove moisture and eliminates possible moisture scavenging.

Proposed calibration ranges for the gas analyzers are listed in Table 2-1. Results for each pollutant will be reported in units of ppm, ppm corrected to 15 % O_2, lb/h, and lb/kWh.

2.2.5 Field Test Procedures and Site Specific Instrumentation

Field test procedures will follow the guidelines and procedures detailed in the following sections of the GVP:

- Electrical performance - §7.1
- Electrical efficiency - §7.2
- CHP thermal performance - §7.3
- Emissions performance - §7.4

Load tests will be conducted as three one-hour test replicates at each load setting. In addition to the controlled tests, system performance will be monitored continuously for a period of approximately one week while the unit operates under normal facility operations. The DFC 300A unit will be allowed to cycle on and off during this period depending on facility demand. Continuous measurements will be recorded during the entire period including:

- Power output,
- Power quality parameters,
- Fuel consumption (gas flow, pressure, and temperature),
- Heat recovery rate (transfer fluid flow, supply temperature, and return temperature),
- Heat transfer fluid circulation pump power consumption, and
- Ambient conditions (temperature and pressure).

Using these data, the GHG Center can evaluate DFC 300A system performance and usage rates for the DFC under typical facility operations.

Site specific measurement instrumentation is summarized in Table 2-1. The location of instrumentation for the electrical and thermal systems relative to the SUT is illustrated in Figures 2-2 and 2-3. All measurement instrumentation meets the GVP specifications.

Table 2-1. Site Specific Instrumentation for DFC 300A System Verification

Verification Parameter	Supporting Measurement	Expected Range of Measurement	Instrument	Instrument Range	Instrument Accuracy
Electrical Performance	Real power	125 – 250 kW	Power Measurements Ltd. ION power meter (Model 7600 or 7500)	0 – 260 kW	± 1 % of reading
	Power factor	90 – 100 %		0 – 100 %	± 0.5 % of reading
	Voltage THD	0 – 100 %		0 – 100 %	± 1 % FS
	Current THD	0 – 100 %		0 – 100 %	± 1 % FS
	Frequency	58 – 62 Hz		57 – 63 Hz	± 0.01 % of reading
	Voltage	480 V		0 – 600 V	± 1 % of reading
	Current	12 – 25 A		0 – 400 A	± 1 % of reading
	Ambient temperature	20 - 60 °F	Omega Class A 4-wire RTD	0 – 250 °F	± 0.6 °F
	Barometric pressure	14.5 – 15.0 psia	Setra Model 280E	0 – 25 psia	± 0.1 % FS
	Parasitic loads	1000 W	Fluke Model 336 portable power meter	0 – 260 kW	± 2 % of reading
Electrical Efficiency	Gas flow	1500 – 3000 scfh	Model 3M175 Roots Meter	0 – 3000 acfh	± 1 % of reading
	Gas pressure	15 – 20 psia	On-site pressure gauge	0-60 psia	± 3 % of reading
	Gas temperature	30 – 80 °F	Fluke 52 Type K thermocouple	-328 – 2498 °F	± 1 °F
	Fuel LHV	900 – 950 Btu/ft^3	Gas chromatograph	n/a	± 1 % of reading
CHP Thermal Performance	Reheat loop flow	40 – 60 gpm	Istec 1820 Turbine Meter	0.88 – 131 gpm	± 1.0 % of reading
	Reheat loop supply temp.	175 – 185 °F	Omega Class A 4-wire RTD	0 – 250 °F	± 0.6 °F
	Reheat loop return temp.	145 – 155 °F	Omega Class A 4-wire RTD	0 – 250 °F	± 0.6 °F
Emissions Performance	NO_X concentration	< 1 ppmv	Chemiluminescence	0 – 10 ppmv	± 0.5 % of reading
	CO concentration	1 – 10 ppmv	NDIR-gas filter correlation	0 – 100 ppmv	± 2 % FS
	CO_2 concentration	5 – 10 %	NDIR	0 – 20 %	± 2 % FS
	O_2 concentration	8 – 15 %	Paramagnetic or electrochemical cell	0 – 25 %	± 2 % FS
	THC concentration	50 – 150 ppmv	Flame ionization detector (FID)	0 – 200 ppmv	± 0.5 % FS

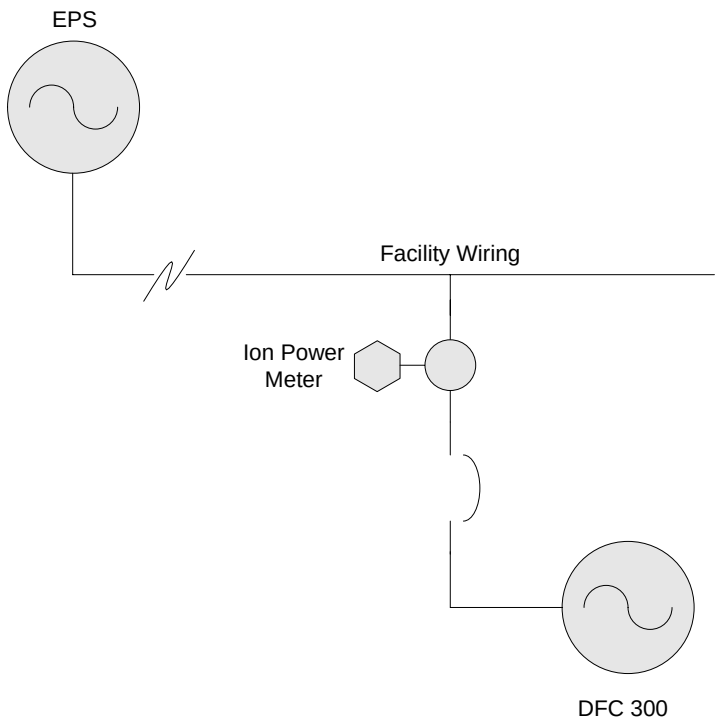

Figure 2-2. Location of Test Instrumentation for SUT Electrical System

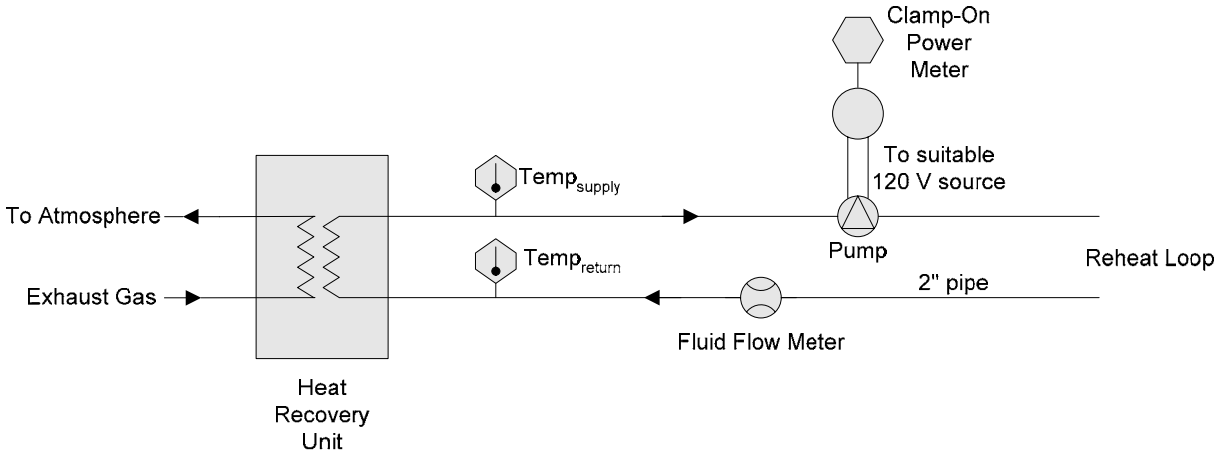

Figure 2-3. Location of Test Instrumentation for SUT Thermal System

2.2.6 Estimated NO_X and CO_2 Emission Offsets

NO_X and CO_2 verification parameters are not included in the GVP, so the approach and procedures to be used in this verification are described here. Use of the DFC 300A cogeneration system at this facility will change the NO_X and CO_2 emission rates associated with the operation of the SUNY-ESF facility. Annual emission offsets for these pollutants will be estimated and reported by subtracting emissions of the on-site CHP unit from emissions associated with baseline electrical power generation technology and baseline space heating equipment.

Appendix A provides the procedure for estimating emission reductions resulting from electrical generation. The procedure correlates the estimated annual electricity savings in MWh with New York and nationwide electric power system emission rates in lb/MWh. For this verification, analysts will assume that the DFC 300A system generates power at a rate similar to that recorded during the continuous monitoring period throughout the entire year.

Appendix B provides the procedure for estimating emission reductions resulting from heat recovered by the DFC 300A system. The amount of heat recovered and used for space heating offsets an equivalent amount of energy that would otherwise be generated by the facility's baseline heating system. Therefore, emissions from the baseline heating system associated with the equivalent amount of heat produced by the DFC 300A cogeneration unit are eliminated. The procedure estimates the amount of fuel that would be consumed by the local utility based on the amount of heat recovered by the cogeneration unit, and applies NO_X and CO_2 emission factors to that estimate. As with the offsets attributable to power generation, analysts will assume that the DFC 300A system provides space heat to the facility throughout the entire year at a rate similar to that recorded during the continuous monitoring period.

(this page intentionally left blank)

3.0 DATA QUALITY OBJECTIVES

Under the ETV program, the GHG Center specifies data quality objectives (DQOs) for each verification parameter before testing commences as a statement of data quality. The DQOs for this verification were developed based on past DG/CHP verifications conducted by the GHG Center, input from EPA's ETV QA reviewers, and input from both the GHG Centers' executive stakeholders groups and industry advisory committees. As such, test results meeting the DQOs will provide an acceptable level of data quality for technology users and decision makers. The DQOs for electrical and CHP performances are quantitative, as determined using a series of measurement quality objectives (MQOs) for each of the measurements that contribute to the parameter determination:

Verification Parameter	DQO (relative uncertainty)
Electrical Performance	± 2.0 %
Electrical Efficiency	± 2.5 %
CHP Thermal Efficiency	± 3.5 %

Each test measurement that contributes to the determination of a verification parameter has stated MQOs, which, if met, ensure achievement of that parameter's DQO. This verification is based on the GVP, which contains MQOs including instrument calibrations, QA/QC specifications, and QC checks for each measurement used to support the verification parameters being evaluated. Details regarding the measurement MQOs are provided in the following sections of the GVP:

§ 8.1 Electrical Performance Data Validation
§ 8.2 Electrical Efficiency Data Validation
§ 8.3 CHP Performance Data Validation

The DQO for emissions is qualitative in that the verification will produce emission rate data that satisfies the QC requirements contained in the EPA Reference Methods specified for each pollutant. The verification report will provide sufficient documentation of the QA/QC checks to evaluate whether the qualitative DQO was met. Details regarding the measurement MQOs for emissions are provided in the following section of the GVP:

§ 8.4 Emissions Data Validation

The completeness goal for this verification is to obtain valid data for 90 percent of the test periods (controlled test period and extended monitoring).

(this page intentionally left blank)

4.0 DATA ACQUISITION, VALIDATION, AND REPORTING

4.1 DATA ACQUISITION AND DOCUMENTATION

Test personnel will acquire the following electronic data and generate the following documentation during the verification:

Electronic Data

Electronic data will be monitored for the following measurements:

- power output and power quality parameters
- fuel flow, pressure, and temperature
- transfer fluid flow, supply temperature, and return temperature
- ambient temperature and barometric pressure

The ION power meter will poll sensors once per second. It will then calculate and record one-minute averages throughout all tests. The field team leader will download the one-minute data directly to a laptop computer during the short-term tests. GHG Center personnel will download the data by telephone during the long term monitoring period.

An Agilent / HP Model 34970A or equivalent data logger will record all of the temperature, pressure, and flow meter data once every 5 seconds. The field team leader will download the data directly during short-term tests while GHG Center personnel will download the data by telephone during the long term monitoring period. Analysts will use Excel spreadsheet routines to calculate one-minute averages from the 5-second snapshots.

The electronically-recorded one-minute averages will be the source data for all calculated results, with the possible exception of the parasitic loads and the gas sample analysis. Parasitic load source data may be hand-logged by the field team leader and gas sample analysis data will come from Empact Analytical.

Documentation

Printed or written documentation will be recorded on the log forms provided in Appendix B of the GVP and will include:

- Daily test log, including water system pressure data, starting and ending times for test runs, notes, etc.
- Appendix A forms which show the results of QA / QC checks
- Copies of calibrations and manufacturers' certificates

The GHG Center will archive all electronic data, paper files, analyses, and reports at their Research Triangle Park, NC office in accordance with their quality management plan.

4.1.1 Corrective Action and Assessment Reports

A corrective action will occur if audits or QA / QC checks produce unsatisfactory results or upon major deviations from this TQAP. Immediate corrective action will enable quick response to improper procedures, malfunctioning equipment, or suspicious data. The corrective action process involves the

field team leader, project manager, and QA Manager. The GHG Center QMP requires that test personnel submit a written corrective action request to document each corrective action.

The field team leader will most frequently identify the need for corrective actions. In such cases, he or she will immediately notify the project manager. The field team leader, project manager, QA Manager and other project personnel, will collaborate to take and document the appropriate actions.

Note that the project manager is responsible for project activities. He is authorized to halt work upon determining that a serious problem exists. The field team leader is responsible for implementing corrective actions identified by the project manager and is authorized to implement any procedures to prevent a problem's recurrence.

4.2 DATA REVIEW, VALIDATION, AND VERIFICATION

The project manager will initiate the data review, validation, and analysis process. At this stage, analysts will classify all collected data as valid, suspect, or invalid. The GHG Center will employ the QA/QC criteria specified in Section 3.0 and the associated tables. Source materials for data classification include factory and on-site calibrations, maximum calibration and other errors, subcontractor deliverables, etc.

In general, valid data results from measurements which:

- meet the specified QA/QC checks, including subcontractor requirements,
- were collected when an instrument was verified as being properly calibrated, and
- are consistent with reasonable expectations (e.g., manufacturers' specifications, professional judgment).

The report will incorporate all valid data. Analysts may or may not consider suspect data, or it may receive special treatment as will be specifically indicated. If the DQO cannot be met, the project manager will decide to continue the test, collect additional data, or terminate the test and report the data obtained.

Data review and validation will primarily occur at the following stages:

- on site -- by the field team leader,
- upon receiving subcontractor deliverables,
- before writing the draft report -- by the project manager, and
- during draft report QA review and audits -- by the GHG Center QA Manager.

The field team leader's primary on-site functions will be to install and operate the test equipment. He will review, verify, and validate certain data (QA / QC check results, etc.) during testing. The log forms in Appendix B of the GVP provide the detailed information he will gather.

The QA Manager will use this TQAP and documented test methods as references with which to review and validate the data and the draft report. He will review and audit the data in accordance with the GHG Center's quality management plan. For example, the QA Manager will randomly select raw data, including data generated and submitted by subcontractors, and independently calculate the verification parameters. The comparison of these calculations with the results presented in the draft report will yield an assessment of the GHG Center's QA/QC procedures.

4.3 INSPECTION/ACCEPTANCE OF SUPPLIES, CONSUMABLES, AND SERVICES

The procurement of purchased items and services that directly affect the quality of environmental programs defined by this TQAP will be planned and controlled to ensure that the quality of the items and services is known, documented, and meets the technical requirements and acceptance criteria herein. For this verification, this includes services provided by Empact Analytical for fuel analyses.

Procurement documents shall contain information clearly describing the item or service needed and the associated technical and quality requirements. The procurement documents will specify the quality system elements of the GVP for which the supplier is responsible and how the supplier's conformity to the customer's requirements will be verified.

Procurement documents shall be reviewed for accuracy and completeness by the project manager and QA manager as noted in Sections 4.1 and 4.2. Changes to procurement documents will receive the same level of review and approval as the original documents. Appropriate measures will be established to ensure that the procured items and services satisfy all stated requirements and specifications.

4.4 DATA QUALITY OBJECTIVES RECONCILIATION

A fundamental component of all verifications is the reconciliation of the collected data with the associated DQO. In this case, the DQO assessment consists of evaluation of whether the stated methods were followed, MQOs achieved, and overall accuracy is as specified in the GVP. The field team leader and project manager will initially review the collected data to ensure that they are valid and are consistent with expectations. They will assess the data's accuracy and completeness as they relate to the stated QA / QC goals. If this review of the test data shows that QA / QC goals were not met, then immediate corrective action may be feasible, and will be considered by the project manager. DQOs will be reconciled after completion of corrective actions. As part of the internal audit of data quality, the GHG Center QA Manager will include an assessment of DQO attainment.

4.5 ASSESSMENTS AND RESPONSE ACTIONS

The field team leader, project manager, QA Manager, GHG Center Director, and technical peer-reviewers will assess the project and the data's quality as the test campaign proceeds. The project manager and QA Manager will independently oversee the project and assess its quality through project reviews, inspections if needed, and an audit of data quality.

4.5.1 Project Reviews

The project manager will be responsible for conducting the first complete project review and assessment. Although all project personnel are involved with ongoing data review, the project manager must ensure that project activities meet measurement and DQO requirements. The project manager is also responsible for maintaining document versions, managing the review process, and ensuring that updated versions are provided to reviewers and tracked.

The GHG Center Director will perform the second project review. The director is responsible for ensuring that the project's activities adhere to the ETV program requirements and stakeholder expectations. The GHG Center Director will also ensure that the field team leader has the equipment, personnel, and resources to complete the project and to deliver data of known and defensible quality.

The QA Manager will perform the third review. He is responsible for ensuring that the project's management systems function as required by the quality management plan. The QA Manager is the GHG Center's final reviewer, and he is responsible for ensuring the achievement of all QA requirements.

FCE and NYSERDA personnel will then review the report. FCE will also have the opportunity to insert supplemental unverified information or comments into a dedicated report section.

The GHG Center will submit the draft report to EPA QA personnel, and the project manager will address their comments as needed. Following this review, the report will undergo EPA management reviews, including the GHG Center Director, EPA ORD Laboratory Director, and EPA Technical Editor.

4.5.2 Test/QA Plan Implementation Assessment

The GHG Center has previously conducted numerous internal technical systems audits (TSAs) of the methods and procedures proposed for this verification and will therefore not repeat a TSA for this test. However, GHG Center QA personnel will conduct a readiness review and observe and document a pre-test assessment and bench test of the measurements system including the following systems:

- flow meters, transmitter, and datalogger
- temperature and pressure sensors and datalogger
- power consumption meters

During the assessment, GHG Center personnel will verify that the equipment, procedures, and calibrations are as specified in this TQAP. Should GHG Center personnel note any deficiencies in the implementation of the TQAP, corrective actions will be immediately implemented by the project manager. GHG Center personnel will document this assessment in a separate report to the GHG Center Director or QA Manager.

4.5.3 Audit of Data Quality

The audit of data quality is an evaluation of the measurement, processing, and data analysis steps to determine if systematic errors are present. The QA Manager, or designee, will randomly select approximately 10 percent of the data. He will follow the selected data through analysis and data processing. This audit is intended to verify that the data-handling system functions correctly and to assess analysis quality. The QA Manager will also include an assessment of DQO attainment.

The QA Manager will route audit results to the project manager for review, comments, and possible corrective actions. The ADQ will result in a memorandum summarizing the results of custody tracing, a study of data transfer and intermediate calculations, and review of the QA/QC data. The ADQ report will include conclusions about the quality of the data from the project and their fitness for the intended use. The project manager will take any necessary corrective action needed and will respond by addressing the QA Manager's comments in the verification report.

4.6 VERIFICATION REPORT AND STATEMENT

The project manager will coordinate report preparation. The report will summarize each verification parameter's results as discussed in Section 2.0 but will not include the raw data or QA/QC checks that support the findings. All raw and processed measurements data as well as calibration data and QA/QC

checks will be made available to EPA as a separate CD, and can be provided to other parties interested in assessing data trends, completeness, and quality by request. The report will clearly characterize the verification parameters, their results, and supporting measurements as determined during the test campaign. The report will also contain a Verification Statement, which is a 3 to 5 page document summarizing the technology, the test strategy used, and the verification results obtained.

The project manager will submit the draft report and Verification Statement to the QA Manager and GHG Center Director for review. A preliminary outline of the report is as follows:

Preliminary Outline
FuelCell Energy DFC 300A Verification Report

Verification Statement

Section 1.0: *Verification Test Design and Description*
Description of the ETV program
FCE DFC 300A System and Host Facility Description
Overview of the Verification Parameters and Evaluation Strategies

Section 2.0: *Results*
Electrical performance
Electrical efficiency
CHP performance
Atmospheric emissions
NO_X and CO_2 emission offsets

Section 3.0: *Data Quality*

Section 4.0: *Additional Technical and Performance Data Supplied by FCE (optional)*

Section 5.0: *References*

Appendices: *Raw Verification or Other Data*

4.7 TRAINING AND QUALIFICATIONS

This test does not require specific training or certification beyond that required internally by the test participants for their own activities. The GHG Center's project manager has approximately 20 years experience in field testing of air emissions from many types of sources and will directly oversee field activities. He is familiar with the test methods and standard requirements that will be used in the verification test.

The field team leader has performed numerous field verifications under the ETV program, and is familiar with EPA and GHG Center quality management plan requirements. The QA Manager is an independently appointed individual whose responsibility is to ensure the GHG Center's conformance with the EPA approved QMP.

4.8 HEALTH AND SAFETY REQUIREMENTS

This section applies to GHG Center personnel only. Other organizations involved in the project have their own health and safety plans which are specific to their roles in the project.

GHG Center staff will comply with all known host, state/local and Federal regulations relating to safety at the test facility. This includes use of personal protective gear (such as safety glasses, hard hats, hearing protection, safety toe shoes) as required by the host and completion of site safety orientation. The field team leader will fill out a site safety plan prior to leaving for field work.

5.0 REFERENCES

[1] *Distributed Generation and Combined Heat and Power Field Testing Protocol, DG/CHP Version,* Association of State Energy Research and Technology Transfer Institutions, Madison, WI, October 2004.

[2] *PTC-50 Performance Test Code for Fuel Cell Power Systems,* The American Society of Mechanical Engineers, 2002.

[3] *Inventory of U.S. Greenhouse Gas Emissions and Sinks: 1990 – 1999, Annex A: Methodology for Estimating Emissions of CO2 from Fossil Fuel Combustion,* U.S. Environmental Protection Agency, EPA 236-R-01-001, Washington, DC, 2001.

[4] *AP-42, Compilation of Air Pollutant Emission Factors – Volume 1, Stationary Point and Area Sources, Fifth Edition,* U.S. Environmental Protection Agency, Office of Transportation and Air Quality, Washington, DC, 1995.

(this page intentionally left blank)

Appendix A
Electric Power System Emissions Reduction Estimates

The verification report will provide estimated emissions reductions (or increases) as compared to aggregated electric power system (EPS) emission rates for the state in which the apparatus is located (New York for this verification). The report will also include estimated reductions based on aggregated nationwide emission rates. Analysts will employ the methods described in this Appendix.

A DG asset or power-saving device, when connected to the EPS, will change the overall EPS emissions signature. As an example, a zero-emission generator, such as a hydroelectric power plant, will decrease EPS CO_2 emissions on a lb/MWh basis. The potential emissions reduction (or increase) for DG is the difference between the EPS and DG emission rates, multiplied by the expected power generation or savings rate:

$$Reduction_i = (ER_{EPS,i} - ER_{DG,i}) * MWh_{DG,Ann} \qquad \text{Eqn. A1}$$

Where:

$Reduction_i$ = annual reduction for pollutant i, pounds per year (lb/y)
$ER_{EPS,i}$ = EPS emission rate for pollutant i (see below), pounds per megawatt-hour (lb/MWh)
$ER_{DG,i}$ = DG emissions rate for pollutant i, lb/MWh
$MWh_{DG,Ann}$ = annual estimated DG power production or device-based power savings, megawatt-hours per year (MWh/y)

The potential emissions reduction for a power savings device is simply:

$$Reduction_i = ER_{EPS,i} * MWh_{Device,Ann} \qquad \text{Eqn. A2}$$

Values for $ER_{DG,i}$ are available from the performance verification results. Estimated $MWh_{DG,Ann}$ or $MWh_{Device,Ann}$ should also be available from the verification results. This estimate depends on the specific verification strategy and its derivation should be clearly described in the TQAP and verification results. A simple example is the power production or power savings multiplied by the annual availability or capacity factor. For example, a 200 kW fuel cell which operates at full capacity 75 percent of the time can be expected to generate 1314 MWh annually.

$ER_{EPS,i}$ for specific pollutants can vary widely because the EPS may obtain its power from many different generators. The generation mix can change dramatically from hour to hour, depending on market forces, system operations, wheeling practices, emergencies, maintenance, and other factors. Many different approaches have been suggested for estimating $ER_{EPS,i}$, but no consensus has been achieved.

The following estimation methodology is simple, it uses peer-reviewed carbon dioxide (CO_2), nitrogen oxide (NO_X), mercury (Hg), and sulfur dioxide (SO_2) data available from the US Environmental Protection Agency's "eGRID" database, and it provides some analysis flexibility.

At the time of this writing, eGRID data was available only through 2002 in eGRID2002 Version 2.01. The following example uses data from that version. A new version, eGRID2006 Version 1.0, was recently released and is available at http://www.epa.gov/cleanenergy/egrid/index.htm.

The example presented here is for a generator located in Florida, but this procedure can be used for any state. Figure A-1 shows the introductory screen prompts which provide year 2000 emission rates for Florida.

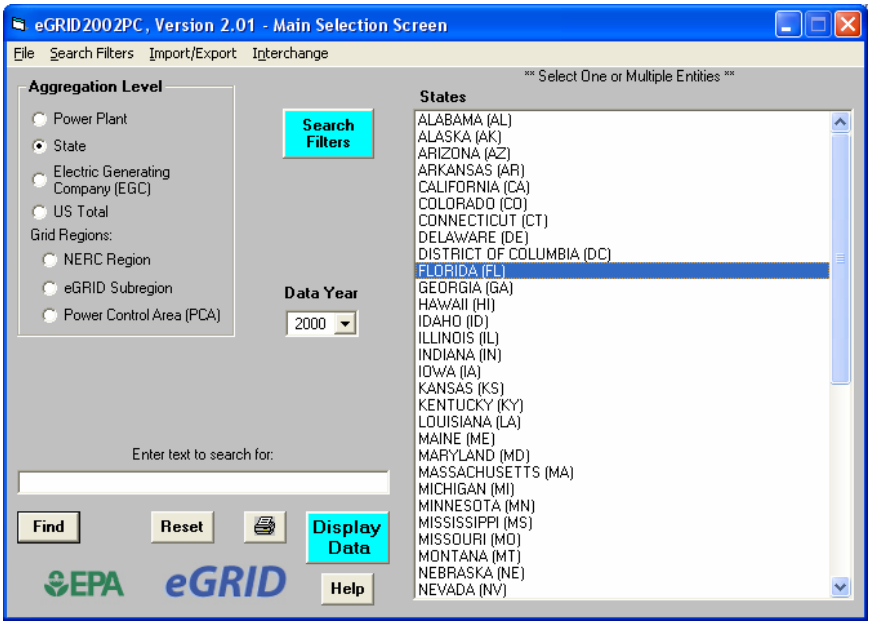

Figure A-1. Example Aggregated Emissions Introductory Screen

Double-clicking the state of interest brings up the emissions data, as shown in Figure A-2.

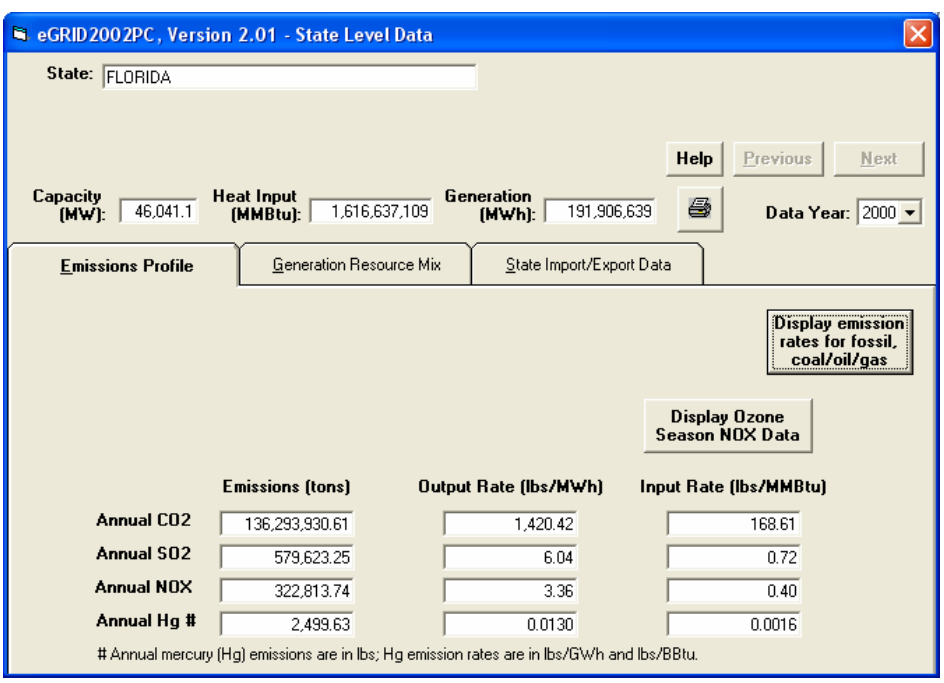

Figure A-2. Example EPS Emission Rates for 2000

Figure A-3 provides the nationwide emission rates for 2000.

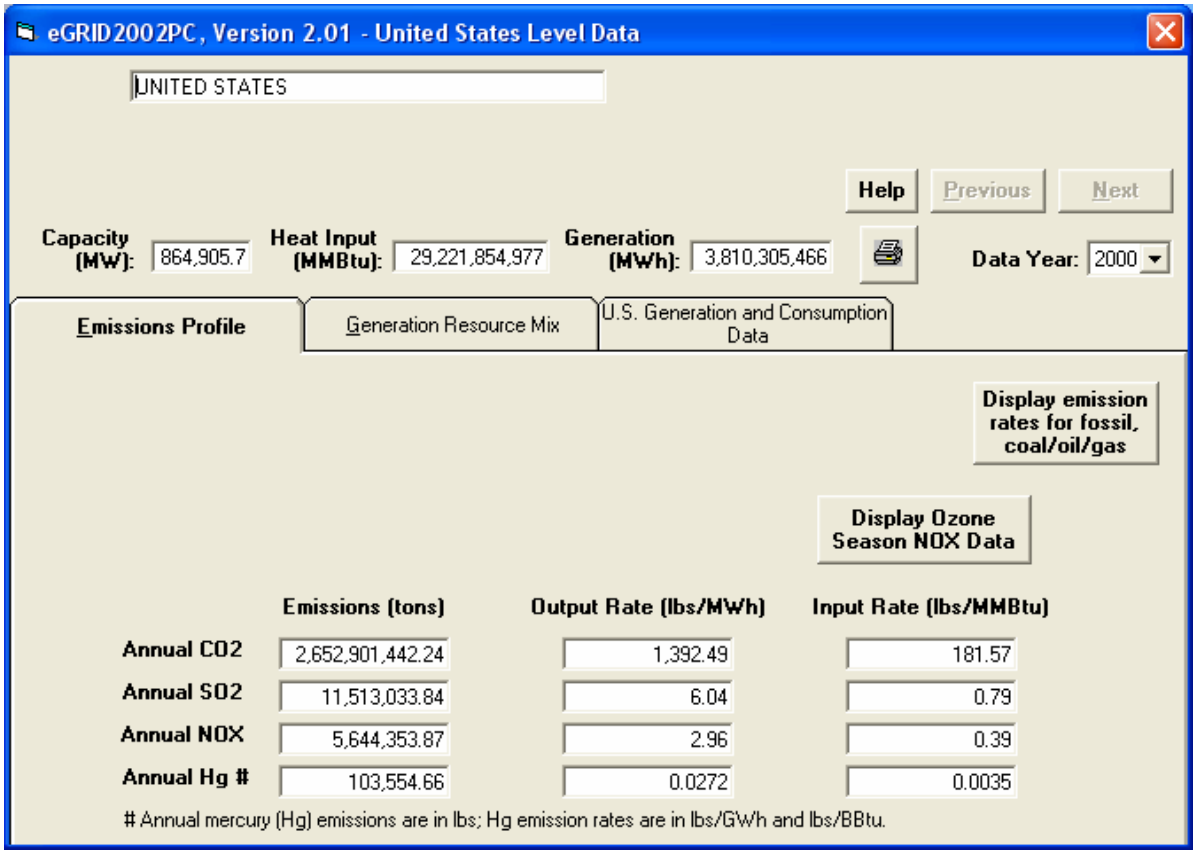

Figure A-3. Nationwide Emission Rates

These results form the basis for comparison. Table A-1 provides emissions offsets estimates for a hypothetical 200 kW fuel cell located in Florida.

Table A-1. Example Fuel Cell Emissions Offsets Estimates

	Florida		Nationwide	
Pollutant	CO_2	NO_X	CO_2	NO_X
ER_{EPS} (from EGRID), lb/MWh	1420	3.36	1392	2.96
ER_{DG} (from verification tests), lb/MWh	1437	0.13	1437	0.13
ER_{EPS} - ER_{DG}, lb/MWh	-17[a]	3.23	-45[a]	2.83
DG capacity, kW	200		200	
Estimated availability or capacity factor	75 %		75 %	
$MWh_{DG, Ann}$	1314		1314	
Emission offset, lb/y	-22400	4250	-59130	3720

[a]Negative numbers represent an increase over the EPS emission rate

Note that this fuel cell increases the overall EPS CO_2 emission rate if electricity generation alone is considered. The increased CO_2 emissions in this example would be balanced by the fuel cell's heat or chilling power production if it is in combined chilling / heat and power (CHP) service. Each verification TQAP must provide a specific accounting methodology for electricity production and CHP utilization because it is impossible to consider all the permutations here. The simplest case, that the unit really

operates at a constant power output, predictable availability (or capacity factor), and that all the heat produced is actually used, is not necessarily true for every installation. Also, the CHP application may displace units fired by various fuels (electricity, heating oil, natural gas, etc.) with their own efficiencies and emission factors. Each verification strategy should explicitly discuss these considerations as part of the specific emissions offset calculation.

It is useful, however, to continue this example. Assume that the fuel cell provides a constant 800,000 British thermal units per hour (Btu/h) to a domestic hot water system, thus displacing an electric-powered boiler. This heat production is equivalent to 234 kW, which would require approximately 239 kW of electricity from the EPS at 0.98 water heating efficiency (source: ASHRAE Standard 118.1-2003, § 9.1). The fuel cell would therefore save approximately 15700 MWh annually at 75 percent capacity factor. Table A-2 shows the resulting emissions offsets estimates.

Table A-2. Example CHP Emissions Offsets Estimates

	Florida		**Nationwide**	
Pollutant	CO_2	NO_X	CO_2	NO_X
ER_{EPS} (from EGRID), lb/MWh	1420	3.36	1392	2.96
ER_{DG} (from verification tests), lb/MWh	0[a]	0[a]	0[a]	0[a]
ER_{EPS} - ER_{DG}, lb/MWh	1420	3.36	1392	2.96
DG capacity, kW	239[b]		239[b]	
Estimated availability or capacity factor	75 %		75 %	
$MWh_{DG, Ann}$	15700		15700	
Emission offset, lb/y	2.23×10^7 (11100 tons)	52800 (26.4 tons)	2.19×10^7 (10900 tons)	46500 (23.2 tons)

[a]Emissions are zero here because the electricity production offset estimate included them.
[b]Based on the power required to run an electric-fired boiler at 98 % water heating efficiency.

In this CHP application, the fuel cell represents a considerable net annual CO_2 emissions reduction for New York of 2.23×10^7 lb/y.

This approach is generally conservative because it does not include transmission and distribution (T&D) losses. T&D losses vary between approximately 3 to 8 percent depending on dispatch practices, the unit's location with respect to the EPS generator actually being displaced, and other factors. This means that 100 kW of energy at the DG unit's terminals will actually displace between 103 and 109 kW (and the associated emissions) at the EPS generator.

EGRID provides numerous other aggregation options, and the reader may wish to conduct other comparisons, such as for a particular utility, North American Electric Reliability Council (NERC) region, or control area.

Appendix B
Heat Recovery System Emissions Reduction Estimates

For each Btu of thermal energy recovered by the CHP system (and used by the host facility), an equivalent amount of energy is no longer needed from the baseline gas-fired boiler used to heat Walters Hall. At many CHP applications, estimation of emission reductions resulting from CHP systems is fairly straightforward provided all of the recovered heat can be utilized throughout the year. When this is the case, the first step then in estimating the burners' avoided emissions is to measure the maximum CHP heat recovery rate at full load. These heat rates (MMBtu/hr) combined with the projected annual operating hours at this load factor allows the estimation of annual heat recovered. This heat recovery from the unit (assuming constant full heat demand) will be calculated as shown in B1 and reported as a reference value.

$$Q_{CHP,Ann} = Q_{CHP} * h * 60 \qquad \text{(Eqn. B1)}$$

Where:

$Q_{CHP,Ann}$ = maximum total CHP heat recovered (MMBtu/yr)
Q_{CHP} = CHP heat recovery rate at 100 percent load factor (MMBtu/min)
h = projected (or proven) operating hours at 100 percent

For this verification, CHP emissions offsets associated with use of CHP thermal energy will be estimated based on the heat delivered to Walters Hall through the fluid recirculation loop. As shown in Equation B2 and described below, projected heat use at the site will be used to estimate emissions reductions specific to the installed application. The CO_2 and NO_X emission rates, combined with the avoided heat input to the primary water heating system yields the potential emissions eliminated by use of the CHP system:

$$E_{BOILER} = Q_{BOILERS} * ER_{BOILERS} \qquad \text{(Eqn. B2)}$$

Where:

$E_{BOILERS}$ = potential annual boiler emissions offset, lb/yr
$Q_{BOILERS}$ = avoided heat input to the boiler, MMBtu/yr
$ER_{BOILERS}$ = estimated gas-fired boiler emission rates; lb/MMBtu CO_2 and lb/MMBtu NO_X

Analysts will use the $E_{BOILERS}$ estimate, along with emission offsets from the electrical grid (Appendix A), to calculate the overall potential annual GHG emission reductions. Using the projected annual heat input offset ($Q_{BOILERS}$ above), calculation of emission offsets due to heat use is as follows. The carbon in the natural gas, when combusted, forms CO_2. The resulting CO_2 emission rate is:

$$ER_{BoilersCO2} = [\frac{44}{12} * (CC) * (FO) / E] \qquad \text{(Eqn. B3)}$$

Where:

$ER_{BoilersCO2}$ = boiler CO_2 emission rate, (lb/MMBtu)
44 = molecular weight of CO_2 (lb/lb.mol)
12 = molecular weight of carbon (lb/lb.mol)
CC = measured fuel carbon content (approx. 31.9 lb/MMBtu) [3]
FO = 0.995; Fraction of fuel carbon oxidized during combustion [3]
E = burner efficiency

The EPA has compiled emission factors for gas-fired boilers in AP-42 [4]. Burners such as those used in the water heater are categorized as similar to commercial boilers under 100 MMBtu/hr heat input. The NO_X emission factor for such units is listed as 100 lb/10^6 scf of natural gas. The LHV for the natural gas used at the host facility is expected to be approximately 950 Btu/scf. This means that 10^6 scf of natural gas will supply approximately 950 MMBtu of heat to the burners. The resulting NO_X emission rate is expected to be approximately 100/950 or 0.1053 lb/MMBtu.