SRI/USEPA-GHG-QAP-13
July 2001

Test and Quality Assurance Plan

KMC Controls, Inc.
SLE-1001 Sight Glass Monitor

Prepared by:

Greenhouse Gas Technology Center
Southern Research Institute

Under a Cooperative Agreement With
U.S. Environmental Protection Agency

SRI/USEPA-GHG-QAP-13
July 2001

Greenhouse Gas Technology Center

A U.S. EPA Sponsored Environmental Technology Verification (ETV) Organization

Test and Quality Assurance Plan
KMC Controls, Inc.
SLE-1001 Sight Glass Monitor

Prepared By:
Southern Research Institute
Greenhouse Gas Technology Center
PO Box 13825
Research Triangle Park, NC 27709 USA
Telephone: 919/806-3456

Reviewed By:
KMC Controls Inc./Future Controls, Inc. ☒
North Carolina State University – Industrial Extension Services ☒
U.S. EPA Office of Research and Development ☒

☒ indicates comments are integrated into Test Plan

Greenhouse Gas Technology Center

A U.S. EPA Sponsored Environmental Technology Verification (ETV) Organization

Test and Quality Assurance Plan
KMC Controls, Inc.
SLE-1001 Sight Glass Monitor

This Test and Quality Assurance Plan has been reviewed and approved by the Greenhouse Gas Technology Center Project Manager and Center Director, the U.S. EPA APPCD Project Officer, and the U.S. EPA APPCD QA Manager.

Original signed by:

_____ _____

Stephen Piccot — Date
Center Director
Southern Research Institute
Greenhouse Gas Technology Center

Original signed by:

_____ _____

David Kirchgessner — Date
Project Officer
U.S. EPA - APPCD

Original signed by:

_____ _____

Sushma Masemore — Date
Project Manager
Southern Research Institute
Greenhouse Gas Technology Center

Original signed by:

_____ _____

Nancy Adams — Date
QA Manager
U.S. EPA - APPCD

Test Plan Final: July 2001

TABLE OF CONTENTS

Page

1.0 INTRODUCTION 1-1
1.1. ETV PROGRAM AND THE GHG CENTER 1-1
1.2. BACKGROUND – REFRIGERANT LEAK MONITORING 1-1
1.3. SIGHT GLASS MONITOR TECHNOLOGY DESCRIPTION 1-4
1.4. PERFORMANCE VERIFICATION PARAMETERS 1-9
1.5. TEST FACILITY DESCRIPTION 1-10
1.6. ORGANIZATION 1-13
1.7. SCHEDULE OF ACTIVITIES 1-15

2.0 VERIFICATION APPROACH 2-1
2.1. REFRIGERANT LEAK DETECTION SENSITIVITY 2-1
2.1.1. Determining Full Charge of the Test System 2-7
2.1.2. Refrigerant Leak Detection Sensitivity testing 2-12
2.1.2.1. Scale 2-12
2.1.2.2. Refrigerant Leak Detector 2-13
2.1.2.3. Refrigerant Recovery Unit 2-14
2.1.2.4. Vacuum Pump 2-14
2.1.2.5. Ambient Measurements 2-14
2.2. ESTIMATED POTENTIAL REFRIGERANT SAVINGS AND POTENTIAL COST SAVINGS 2-15
2.2.1. Example Potential Savings Calculations 2-16
2.3. KMC SIGHT GLASS MONITOR COSTS 2-18

3.0 DATA QUALITY 3-1
3.1. DETERMINATION OF DATA QUALITY OBJECTIVES AND DATA QUALITY INDICATORS 3-1
3.1.1. Leak Detection Sensitivity 3-1
3.1.2. Potential Refrigerant and Cost Savings 3-4
3.2. INSTRUMENT TESTING, INSPECTION, AND MAINTENANCE REQUIREMENTS 3-5

4.0 DATA ACQUISITION, VALIDATION, AND REPORTING 4-1
4.1. DATA ACQUISITION, REVIEW, VALIDATION, AND VERIFICATION 4-1
4.2. RECONCILIATION WITH DATA QUALITY OBJECTIVES 4-2
4.3. ASSESSMENTS AND RESPONSE ACTIONS 4-3
4.3.1. Project reviews 4-3
4.3.2. Inspections 4-3
4.3.3. Audits 4-4
4.3.3.1. Audit of Data Quality 4-4
4.4. DOCUMENTATION AND REPORTS 4-4
4.4.1. Field Test Documentation 4-5
4.4.2. QC Documentation 4-5
4.4.3. Corrective Action and Assessment Reports 4-5
4.4.4. Verification Report and Verification Statement 4-7
4.5. TRAINING, QUALIFICATIONS, HEALTH AND SAFETY 4-8

5.0 REFERENCES 5-1

APPENDICES

		Page
APPENDIX A	Photos of Test Systems	A-1
APPENDIX B	Field Log Forms	B-1
APPENDIX C	Test Equipment Operating Procedures	C-1

LIST OF FIGURES

		Page
Figure 1-1	Simplified Diagram of SGM Installation	1-4
Figure 1-2	The KMC Sight Glass Monitor	1-6
Figure 1-3	KMC Sight Glass Monitor Installation Diagram	1-7
Figure 1-4	Example Refrigerant Trend Log	1-8
Figure 1-5	Photographs of Test Systems	1-11
Figure 1-6	Project Organization	1-14
Figure 1-7	Project Schedule	1-16
Figure 2-1	Refrigerant Leak Detection Sensitivity Testing Procedures	2-2
Figure 2-2	Refrigeration System Access Equipment	2-7
Figure 2-3	Simplified Diagram of Refrigeration Manifold System	2-8
Figure 2-4	Valve Positions For Full Charge Determination	2-9
Figure 2-5	Refrigerant Evacuating	2-10
Figure 2-6	Refrigerant Charging	2-11
Figure 2-7	Digital Scale	2-13
Figure 2-8	Refrigerant Recovery Unit	2-14
Figure 2-9	Vacuum Pump	2-14
Figure 2-10	Example Illustrating Refrigerant Savings Calculations	2-17
Figure 4-1	Corrective Action Report	4-6

LIST OF TABLES

		Page
Table 1-1	Emissions and Global Warming Potentials of CFCs, HCFCs, and HFCs	1-2
Table 1-2	Refrigerant Leak Rate	1-3
Table 1-3	Profiles of Test Systems	1-12
Table 1-4	KMC Operating Procedures for Determining Low Refrigerant Charge	1-13
Table 2-1	Example Charge Leak Detection Sensitivity Results	2-3
Table 2-2	Example Charge Leak Detection Sensitivity Uncertainty Data	2-5
Table 2-3	Hypothetical Annual Average Refrigerant Savings and Cost Savings for Multiple Roof-Top Air Conditioning Systems	2-18
Table 2-4	Example Illustrating Documentation of SGM Costs	2-19
Table 3-1	Data Quality Objectives	3-2
Table 3-2	Measurement Instrument Specifications and Data Quality Indicator Goals	3-3
Table 3-3	Summary of QA/QC Checks	3-4

DISTRIBUTION LIST

U.S. Environmental Protection Agency
David Kirchgessner
Nancy Adams

KMC Controls, Inc./Future Controls, Inc.
Rowland Bradford
Jeff Killian
Norman Nevitt
Laurel Chapman

Southern Research Institute / Greenhouse Gas Technology Center
Stephen Piccot
Sushma Masemore
Robert Richards
Ashley Williamson

Refrigeration Systems Technical Panel Reviewers
Wayne Friedrich, NC State University
J.C. Boykin, NC State University
M. Gonzalez, NC State University
Cynthia Gage, U.S. Environmental Protection Agency
Richard Wells, Brady Services

1.0 INTRODUCTION

1.1. ETV PROGRAM AND THE GHG CENTER

The U.S. Environmental Protection Agency's Office of Research and Development (EPA-ORD) operates a program to facilitate the deployment of innovative technologies through performance verification and information dissemination. The goal of the Environmental Technology Verification (ETV) program is to further environmental protection by substantially accelerating the acceptance and use of improved and innovative environmental technologies. The ETV program is operating in response to the belief that there are many viable environmental technologies that are not being used for the lack of credible third-party performance data. With performance data developed under this program, technology buyers, financiers, and permitters in the United States and abroad will be better equipped to make informed decisions regarding environmental technology purchase and use.

The Greenhouse Gas Technology Center (GHG Center) is one of six verification centers operating under the ETV program. The GHG Center is managed by EPA's partner verification organization, Southern Research Institute (SRI), which conducts verification testing of promising GHG mitigation and monitoring technologies. The GHG Center's verification process consists of developing verification protocols, conducting field tests, collecting and interpreting field and other data, obtaining independent peer-review input, and reporting findings. Performance evaluations are conducted according to externally reviewed verification Test Plans and established protocols for quality assurance.

The GHG Center is guided by volunteer groups of stakeholders. These stakeholders offer advice on specific technologies most appropriate for testing, help disseminate results, and review Test Plans and Verification Reports. The GHG Center's stakeholders consists of national and international experts in the areas of climate science and environmental policy, technology, and regulation. It also includes industry trade organizations, environmental technology finance groups, governmental organizations, and other interested groups. In certain cases, technical panels are assembled for specific technology areas where the existing stakeholder organizations do not have the expertise. The technical panel members provide guidance on the verification testing strategy related to their area of expertise and peer-review key documents prepared by the GHG Center.

1.2. BACKGROUND – REFRIGERANT LEAK MONITORING

Under the Montreal Protocol and Clean Air Act Amendments of 1990, ozone depleting substances such, as chlorofluorocarbons (CFCs), have been phased out by ending the production and importation of CFCs by 1996. As alternatives to CFCs, hydro-chloro-fluorocarbons (HCFCs) have been used as interim replacements because of their lower ozone depletion potentials. HCFCs are essentially CFCs that replace one or more halogen atoms with hydrogen atoms, and under current controls, their production in the U.S. will end by the year 2030. Hydrofluorocarbons (HFCs), which contain only carbon, hydrogen, and fluorine, do not destroy the ozone and have become the most desirable replacements for CFCs.

Although HCFCs and HFCs are suitable substitutes for ozone depleters, they are potent GHGs. As shown in Table 1-1, these chemicals have high global warming potentials and extremely long atmospheric lifetimes, resulting in their essentially irreversible accumulation in the atmosphere (EPA 1997, 1999). The market for HFCs is expanding, and their emissions have increased dramatically from small amounts in 1990 to about 21 million tons carbon equivalent in 1998 (an increase of about 115 percent). According

to EPA, this increase was primarily the result of HFC substitution in stationary refrigeration and air conditioning systems (e.g., chillers, room air conditioners, dehumidifiers).

Table 1-1. Emissions and Global Warming Potentials of CFCs, HCFCs, and HFCs
(Source: EIA 1997, 1999)

Compound	Atmospheric Lifetime (years)	100-Year Global Warming Potential (CO_2 = 1)	U.S. Emissions 1000 metric tons		Principal Uses
			1995	1998	
Chlorofluorocarbons (CFCs)					
CFC-11	60	1,320	36.2	24.9	Blowing agent, chillers,
CFC-12	130	6,650	51.8	21.0	auto air conditioners, solvent
Other CFCs		9,300	4.6	2.8	
Hydrochlorofluorocarbons (HCFCs)		1,350	72.3	75.1	Air conditioners
HCFC-22	15.8	270	20.6	26.7	CFC replacement
HCFC-141b	10.8	1,650	7.3	9.0	Sterilant and refrigerant
HCFC-142b	22.4	93 – 480	5.8	7.0	
Other HCFCs					
Hydrofluorocarbons (HFCs)					
HFC-23	264	11,700	2.3	3.4	HCFC by product
HFC-125	28.1	2,800	0.5	1.1	CFC/HCFC replacement
HFC-134a	14.6	1,300	14.3	26.9	Air conditioners Refrigeration

HCFC-22 (R-22) and HFC-134a are most often used in air conditioning and refrigeration equipment. Although these refrigerants are maintained in closed systems, some of the refrigerant escapes to the atmosphere during routine installation, operation, and servicing of the equipment. In addition, fugitive emissions escape into the atmosphere from leaky components, resulting in further refrigerant loss. This release to the atmosphere varies among different types and sizes of equipment and operating practices, and directly contributes to greenhouse gas emissions. Compressor efficiency decreases with refrigerant loss. Most compressor systems are operated by electricity, which is often produced by burning fossil fuels such as coal, oil, and natural gas. The increase in electricity consumption resulting from less efficient compressor operation can indirectly result in increases of GHG emissions when fossil fuel is used to generate the electricity. According to several industry studies, efficiency drops associated with large chillers can result in a 12 percent increase in electrical demand to produce the same cooling effect (Johnson 2000).

Under Section 608 of the Clean Air Act Amendments of 1990, EPA promulgated leak-repair requirements for systems containing CFCs and HCFCs (60 CFR 40420). More recently, EPA has proposed another rule to include substitute refrigerants such as HFCs and perfluorocarbons (PFCs) (63 CFR 32044). Under both rules, when an owner or operator of an appliance that normally contains a refrigerant charge of more than 50 pounds discovers that refrigerant has leaked in amounts that exceed a specified trigger amount, the owner or operator must take corrective action. The maximum trigger (leak) amounts for a 12-month period currently allowed and proposed are summarized in Table 1-2.

Table 1-2. Refrigerant Leak Rate		
Type of Appliance	Current Allowable Leak Amounts for CFCs and HCFCs (% of charge / yr)	Proposed Allowable Leak Rate for CFCs, HCFCs, HFCs, and PFCs) (% of charge / yr)
Commercial Refrigeration Equipment		
• built before or during 1992	35	15
• built after 1992	35	10
Industrial Process Refrigeration Equipment		
• built before or during 1992, custom built, with open-drive compressor, or contains a single, primary refrigerant loop	35	35
• All others	35	20
All Other Appliances (e.g., comfort cooling chillers)		
• built before or during 1992, contains more than 50 lbs of refrigerant	15	10
• built after 1992, contains more than 50 lbs of refrigerant	15	5

In response to the EPA regulations, manufacturers have made improvements to reduce refrigerant loss through design changes, and new equipment for measuring and detecting leaks has entered the market. KMC Controls, Inc. (KMC), of New Paris, Indiana, and Future Controls, Inc. of Fort Myers, Florida, have jointly developed a new leak-monitoring device which allows refrigeration and air conditioning equipment operators to provide early detection of refrigerant loss. The device, titled the KMC SLE-1001 Sight Glass Monitor (SGM), identifies when a system's refrigerant charge is low and is in need of maintenance and possible repair (including leak repair). This is accomplished using an infrared radiation detector that continuously monitors refrigerant properties through a refrigerant sight glass, often already installed in a refrigeration system, and a data logging and interpretation system developed by KMC. The ability of the SGM to detect relatively small levels of refrigerant loss is of significant interest to most users, particularly those facing EPA regulations. KMC has requested that the GHG Center perform an independent third-party performance verification of the SGM on commercial- and industrial-scale refrigeration and air conditioning systems.

It is anticipated that potential users of this technology will want to understand the system's linearity; that is, understand how its performance may vary on large and small systems, or between systems with different refrigerants, operating cycles, or failure modes. The SGM will be verified at several actual refrigeration system installations, and its ability to detect refrigerant loss relative to existing inspection and maintenance programs will be assessed. A Refrigeration Systems Technical Panel has been assembled to provide guidance on the verification testing strategy and to review documents prepared for the SGM verification. The panel members represent potential purchasers of the monitor, and EPA regulatory and research officials.

This document is the Test and Quality Assurance Plan (Test Plan) for verifying the SGM. It contains rationale for the selection of verification parameters, and describes the verification approach, data quality objectives, and Quality Assurance/Quality Control (QA/QC) procedures to be implemented. This Test Plan has been reviewed by KMC, Future Controls, selected members of the Refrigeration Systems Technical Panel, and the EPA QA team. Once approved, as evidenced by the signature sheet at the front

of this document, it will meet the requirements of the GHG Center's Quality Management Plan (QMP), and thereby satisfy the ETV QMP requirements. This Test Plan has been prepared to guide implementation of the test and to document planned test operations. Once testing is completed, the GHG Center will prepare a Verification Report and Statement, which will first be reviewed by KMC. Once all comments are addressed, the report will be peer-reviewed by selected members of the Refrigeration Systems Technical Panel and the EPA QA team. Once completed, the GHG Center Director and the EPA Laboratory Director will sign the Verification Statement, and the final Verification Report and Statement will be posted on the Web sites maintained by the GHG Center and the ETV program.

The remaining discussion in this section provides a description of the SGM technology and describes the field site at which verification testing will be conducted. This is followed by a list of performance verification parameters that will be quantified through independent testing. A discussion of key organizations participating in this verification, their roles, and the verification test schedule is provided at the end of this section. Section 2.0 describes the technical approach for verifying each parameter, including sampling procedures, analytical procedures, and QA/QC procedures that will be followed. Section 3.0 identifies the Data Quality Objectives (DQOs) for critical measurements, and states the accuracy, precision, and completeness goals for key verification parameters. Section 4.0 discusses data logging, validation, reporting, and auditing procedures.

1.3. SIGHT GLASS MONITOR TECHNOLOGY DESCRIPTION

The transfer of heat in refrigeration and air conditioning systems is performed by a refrigerant operating in a closed system. Refrigerated systems are primarily designed to cool products, whereas air conditioning systems cool spaces. Figure 1-1 illustrates a typical air conditioning system. It consists of four basic components: (1) compressor, (2) condenser, (3) expansion valve or flow controller, and (4) evaporator.

Figure 1-1. Simplified Diagram of SGM Installation

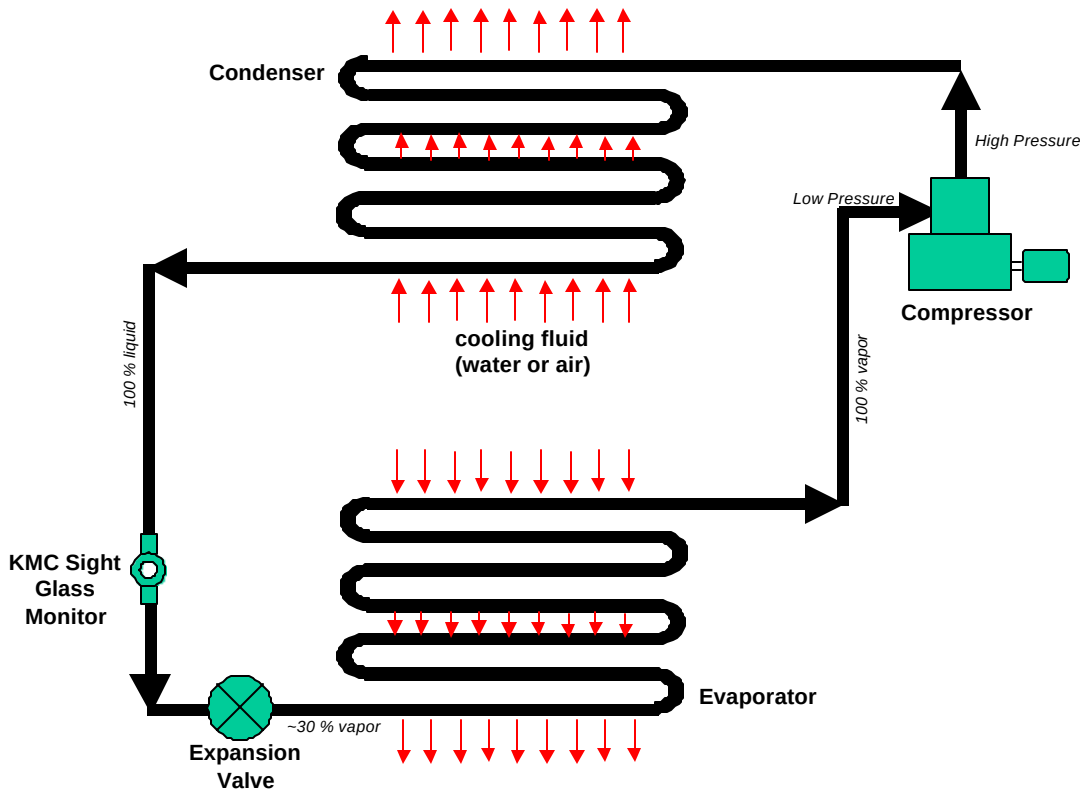

The compressor pressurizes the low-pressure refrigerant vapor which forms hot, high-pressure, superheated vapor. The compressor also provides the motive force needed to circulate the refrigerant through the other basic components and interconnecting piping network of the refrigeration system. The high-pressure vapor discharged from the compressor enters a condenser which cools the refrigerant vapor to a warm, high-pressure, subcooled liquid state. The condenser transfers the heat that was absorbed by the evaporated refrigerant and heat generated by the work of compression and motor operation to the external cooling fluid (e.g., water or outside air).

The flow controller, often located immediately prior to the evaporator coils, controls the flow of refrigerant from the condenser to the evaporator. This device acts as a restriction to reduce the pressure and temperature of the liquid refrigerant. Several types of flow controllers are used in the industry, with a thermostatic expansion valve being one of the most commonly used controllers. The valve position is pre-adjusted to maintain the optimum amount of refrigerant flow into the evaporator under varying indoor and outdoor temperatures.

The last component, the evaporator, serves to remove heat from the heat transfer fluid (indoor air or chiller water) passing over it. Inside the evaporator, cold liquid refrigerant exiting the expansion valve boils and is converted into a vapor by the heat absorbed from the indoor air or water. To prevent liquid slugging of the compressor, all of the liquid refrigerant must be returned to a vapor state prior to leaving the evaporator. From here, the cool vapor returns to the compressor to be recompressed and recirculated.

In order for a thermostatic expansion valve to operate properly, it must receive a continuous stream of subcooled liquid (10 to 20 ^{o}F) at the proper pressure. To determine if the condenser is supplying liquid refrigerant that meets these requirements, a sight glass is installed in the liquid line to allow visual inspection of the refrigerant condition. Most commercial and industrial equipment is manufactured with sight glasses near the condenser outlet, but ideally, sight glasses should be located as near as possible to the thermostatic expansion valve (*Marovek 2001*).

A clear liquid in the sight glass indicates that there is adequate refrigerant charge in the system to ensure proper feed through the expansion valve. However, bubbles in the sight glass can indicate the presence of refrigerant vapor or non-condensables in the liquid line (*Moravek 2001*). Continuous presence of refrigerant vapor or bubbles during compressor operation indicates that the system is short of refrigerant charge. Non-condensables can be seen in the form of air, nitrogen, or other types of refrigerants not compatible with the system design. The presence of these non-condensables can be related to poor refrigerant evacuation activities that result from the operators' failure to completely evacuate air from the system prior to charging. A major restriction in the liquid line, such as a clogged filter, can also result in bubbles in the sight glass due to excessive pressure drop in the line. This restriction causes the refrigerant to boil or flash off to a vapor. The resulting vapor can be seen as bubbles in the sight glass. Drastic load changes and excessive compressor cycling may also cause bubbles to form.

Some sight glasses are equipped with a moisture element inside the sight glass which can indicate the presence of moisture. Despite its intended purpose, the utility of the sight glass as a reliable indicator of low refrigerant charge and moisture levels is often hampered by the relative inaccessibility of the sight glass, and the inability of HVAC technicians to properly interpret sight glass conditions.

The KMC SLE-1001 Sight Glass Monitor, shown in Figure 1-2, is designed to automatically interpret the condition of the refrigerant and provide operators with audible alarms or remote feedback of actual conditions. The SGM is an external device that is installed on an existing factory-installed sight glass. It is specifically designed to be used with Sporlan Valve Company's sight glasses, which represent about 90 percent of sight glasses currently in operation. The SGM monitors two conditions through the sight glass window: bubbles and moisture content. When bubbles or flash gas of non-condensed refrigerant are

detected in the sight glass, a red light on the monitor housing flashes. The frequency of the red LED pulses increase with increased frequency of bubble detection. The moisture LED changes from green to yellow when moisture is detected in the system. As moisture levels increase, the LED glows brighter in proportion to the degree of moisture detected. In both cases, the SGM provides a 0 to 5 volt output with the voltage increasing proportionally to the red LED flash frequency and the yellow LED intensity.

Figure 1-2. The KMC Sight Glass Monitor

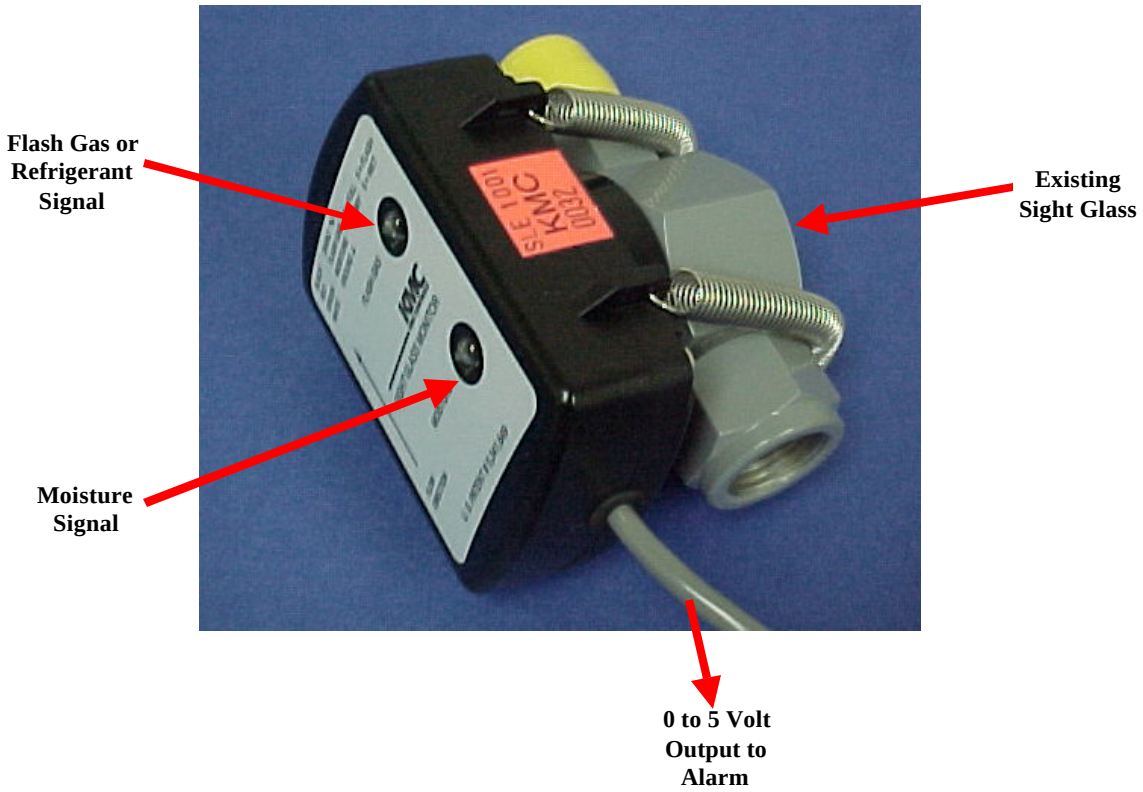

Using written guidelines supplied by KMC, an operator can be trained to interpret the LED signals displayed on the sight glass. Some of KMC's customers interface the SGM output with a voltage operated relay set to trigger at 4.0 volts direct current (VDC). This provides a simple "on/off" alarm. Alternatively, the 0 to 5 volt output signal can be wired to a KMDigital Controller which allows real-time monitoring and logging of sight glass conditions (Figure 1-3). The procedures for interpreting the signals are contained in written guidelines by KMC. The KMDigital Controller is a programmable loop controller, commonly used for building automation systems. It allows inputs from multiple sensors such as temperature probes, thermostats, air velocity, and pressure sensors, and contains additional input channels for the signals produced from the monitor.

Figure 1-3. KMC Sight Glass Monitor Installation Diagram

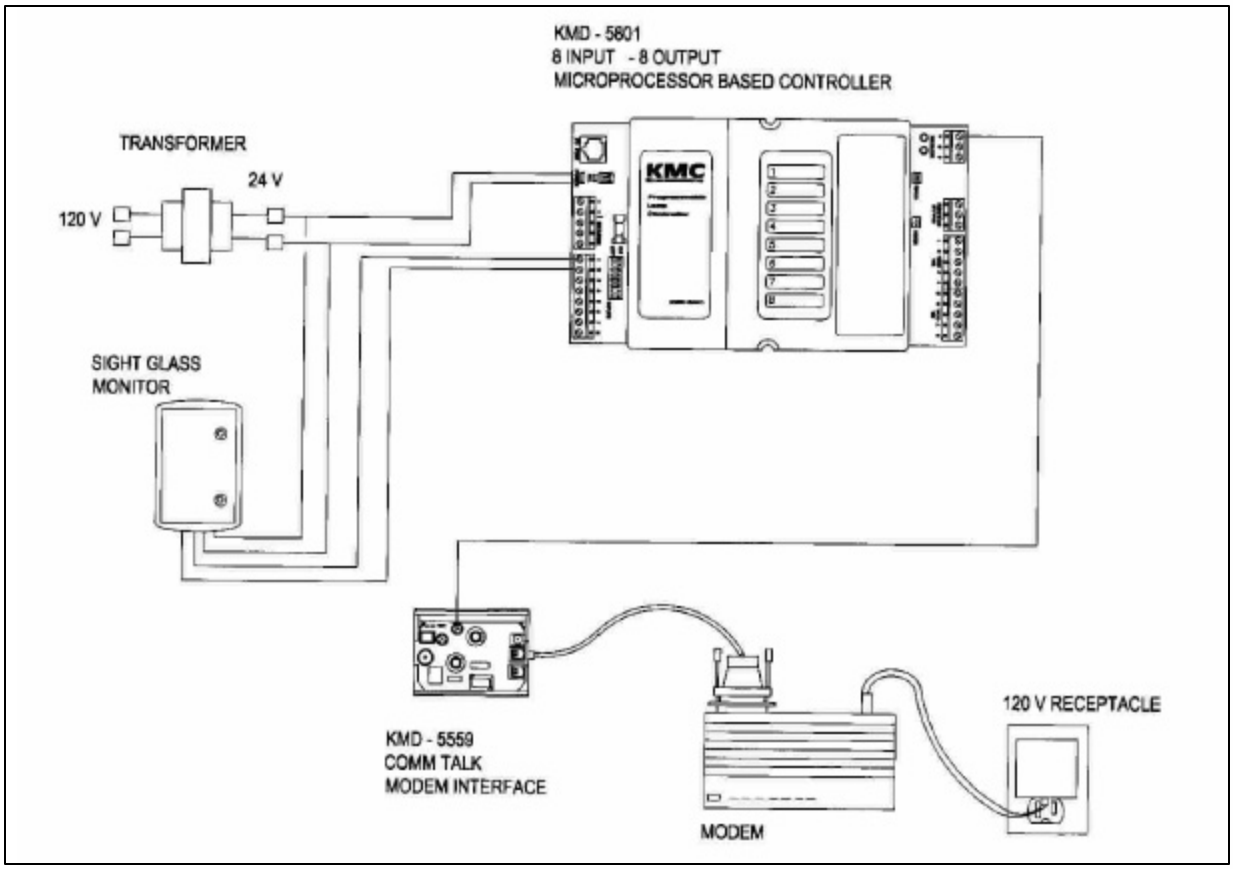

The real time data collected by the KMDigital Controller are interpreted with the KMDigital Facilities Management System (Management System), a software program that alerts the operator to poor system performance. Alarms can be delivered via modem to a central computer or setup to engage a relay which sounds an alarm. Trend logs can also be configured to view the variability in flash vapor and moisture signals. Note that the system to be used in SGM verification will consist of the Management System receiving the voltage signal from the SGM and interpreting the real time voltage readings, and sounding a buzzer alarm when flash vapor is detected. The alarm levels are representative of flash vapor conditions that result in greater than 4.0 VDC signal for more than 60 seconds. The Management System is pre-configured with voltage readings at which flash vapor or moisture alarms will occur, and is reported to filter out alarms from routine operational changes (e.g., bubbles detected during initial system startup). To address bubbles formed from restrictions in the line, poor evacuation, or clogged filters, KMC requires operators to maintain clean filters, use manufacturer recommended operational procedures, and follow industry standard evacuation and charging procedures prior to use of the SGM. All other causes of bubbles are automatically interpreted by the Management System.

For instance, the backside of the sight glasses may have different shades of reflectivity due to age or overheating during installation of the sight glass. The Management System, by using engineering adjustments in software, is required to compensate for the different shades of reflectivity in a sight glass as documented in KMC's instruction procedures. The Management System has also incorporated a time delay for the flash vapor alarm to eliminate nuisance alarming. If the refrigerant flashes when the unit is turned on, a time interval can be specified to avoid the alarm from sounding during startup. The delay

time, recommended by KMC for specific systems, allows enough time for the flash vapor to condense and stabilize after unit startup. The Management System tracks the presence of flash vapor using an arbitrary scale of 0 to 100 percent, with 0 percent representing no indication of flash gas and 100 percent representing a strong indication of flash vapor. Once the value of this variable is equal to or greater than the programmed value, a software alarm is enabled. When the sight glass provides for moisture indication, there may be different shades of green on the moisture indicator in the sight glass. Provision is made in the software to provide for compensation for the differences in color from one sight glass to another. The Management System also tracks the active value of moisture on a scale of 0 to 100 percent. An operator's manual, provided by KMC, contains instructions for determining the levels at which charge loss has occurred and the Management System has sounded an alarm.

Trend logs, containing readings which can be taken at intervals of every 5 seconds, 1 minute, 10 minutes, 30 minutes, and 1 hour, are used to plot flash vapor and moisture levels. The trend logs can store up to 400 readings, and the data can be exported into several spreadsheet and database formats. Figure 1-4 illustrates an actual trend log for a SGM mounted on a small refrigeration unit. This trend log was taken just a few minutes after compressor startup. The spikes shown are normal as some flashing or bubbling occurs at compressor startup. As the compressor runs, the sight glass begins to clear and flashing stops as indicated by the drop in the output level and the elimination of spikes. The moisture level, as indicated by the flat line, stays relatively constant as long as the moisture levels remain constant.

Figure 1-4. Example Refrigerant Trend Log

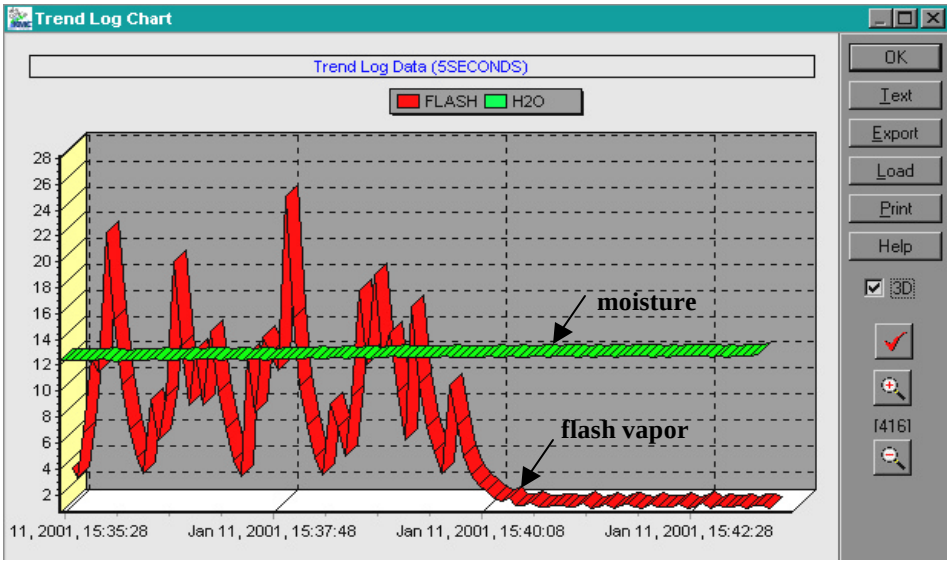

The SGM can be installed on existing systems with 0.25 inch or more clearance surrounding the exterior of the sight glass window frame. The sight glass window must be clear and the side in contact with the refrigerant should not be dark or discolored. The light sensor is placed flush over the sight glass window, and the assembly is held firmly in place with two stainless steel springs which loop around the sight glass' inlet and outlet pipes. Installed in this manner, it is non-invasive and does not require interrupting the HVAC system operation. For new sight glass installations, KMC recommends installing the sight glass and the SGM in a vertical position, with the flow of refrigerant upwards through the sight glass.

Installation in horizontal positions can cause the monitor to be exposed to bubbles that are not associated with low refrigerant charge.

1.4. PERFORMANCE VERIFICATION PARAMETERS

Systems that are capable of detecting or reducing refrigerant emissions are of great interest to stakeholders focused on mitigating global climate change. The SGM may be capable of providing both functions at a reasonable cost and, as such, refrigeration system operators and others would have great interest in obtaining verified field data on the monitor's performance and capabilities. Performance parameters that could be examined include the sensitivity of the system, savings in refrigerant and energy use that early detection may provide, installation cost, performance relative to standard refrigerant leak detection strategies, GHG emission reductions, operational availability, maintenance requirements, and overall economic performance. The verification test design does not attempt to evaluate all of the variables above, but focuses on assessing performance parameters of significant interest to potential future customers of the SGM. These include:

- Refrigerant Leak Detection Sensitivity
- Potential Refrigerant Savings and Cost Savings
- KMC Sight Glass Monitor Cost

Refrigerant leak detection sensitivity is defined as the percentage of full charge at which the SGM will indicate low refrigerant levels. Prior to testing, three test units will be retrofitted with the SGM and data interpretation system. The charge capacity of each system will be quantified by fully evacuating the entire system, and charging the system using procedures certified by EPA under the Clean Air Act of 1990, §608, as amended and Title 40 CFR 82, Subpart F. These and all other refrigerant handling procedures described in this Test Plan will be performed by North Carolina State University (NCSU) technicians certified under the Act and Rule; their procedures will conform with standard industry practices. In addition, all refrigerant recovery and handling equipment will conform to the ARI 740-1993 testing requirements referenced in the Rule.

After full refrigerant charge and normal operation have been verified, the GHG Center will simulate refrigerant loss scenarios by physically withdrawing known quantities of refrigerant from the system. The removed refrigerant will be collected and weighed. At the point at which a leak is indicated by the monitor through an audible alarm, the amount and percentage of refrigerant withdrawn will be calculated and recorded. Multiple test runs will be executed on each system to obtain a statistically valid data set. Operating parameters such as compressor current draw, compressor suction and discharge pressures, ambient temperature, and refrigerant line temperatures will be measured throughout testing to document the conditions under which each test run was collected.

Using the measured leak detection sensitivity results, the GHG Center will estimate potential refrigerant savings and cost savings that could occur with the use of the SGM on the test refrigeration systems, if system operators were to immediately respond to alarms and repair the leaks. Refrigerant savings are defined as the average annual pounds of refrigerant that could potentially be saved using an SGM, and cost savings are defined as the cost of that amount of refrigerant. In order to develop annual potential savings estimates, historical maintenance and repair records of test systems will be reviewed, and the amount of refrigerant lost between charges will be determined and compared to the leak detection sensitivity measured for the SGM. The difference between these two numbers will be used to estimate potential refrigerant savings attributable to the monitor.

The capital cost, installation cost, and operational requirements of the SGM will be verified by the GHG Center and summarized in the Verification Report. Capital costs will be verified by obtaining cost data from KMC for the monitoring systems installed and operated in support of this verification test. Installation and operational features will be characterized based on visual inspections during testing and operator interviews conducted during and after testing is complete.

To reduce verification costs, long-term evaluations required to determine system availability, economic performance, and maintenance requirements are not planned. In addition, energy savings due to early detection and repair of undercharged refrigerant systems could not be estimated because energy consumption data as a function of refrigerant charge levels could not be obtained. The GHG Center contacted several refrigeration and air conditioning manufacturers, facilities operators, and service providers to determine if compressor electrical efficiency charts are available, and concluded that such data could not be obtained. As a result, energy losses due to charge losses, and potential savings with the use of the SGM will not be determined.

1.5. TEST FACILITY DESCRIPTION

The SGM will be verified on three refrigeration/air conditioning systems operated by NCSU's Centennial Campus in Raleigh, North Carolina. The test systems are representative of the types and sizes of commercial-scale systems KMC plans to market the device to. KMC has indicated that these systems do not necessarily represent the only applications for the SGM, and has indicated the device is applicable to a wide range of sizes and types of equipment. The verification team has made reasonable efforts to identify varying ranges of test systems. Nevertheless, the test results will be limited to the types of systems tested, and may or may not be applicable to other systems (e.g., equipment with a centralized receiver tank). This potential limitation will be stated in the Verification Report.

Verification testing will be conducted on the following systems:

1. Commercial-scale roof-top air conditioning system
2. Reciprocating chiller
3. Supermarket type refrigeration system

Based on input from KMC and the monitor's inventor, the SGM measures infrared radiation scattering from bubbles visible in the sight glass and, as such, is unlikely to exhibit refrigerant specific performance differences. The GHG Center was able to secure field test systems which use two different types of refrigerant, which will help understand this characteristic. Figure 1-5 illustrates photographs of each system, and Table 1-3 summarizes their key features. A brief description of each system is provided below.

The air conditioning system selected for testing is manufactured by Carrier, and is illustrated in Figure 1-5. This air-to-air exchange roof-top unit is a moderately large commercial (75 tons) unit, providing comfort cooling for the tenants of the Research 4 building of the NCSU campus. It is one of four identical systems that meets the cooling loads of the approximately 38,000 ft^2 of office space. These systems were installed in 1997, and operational and maintenance records are available for each system (e.g., quarterly inspection dates, repairs conducted, refrigerant charges added). Despite its two-compressor design, each compressor operates independently from the other and consists of a separate condenser and evaporator. The SGM will be installed on the second compressor which is charged with 64.5 lbs R-22 refrigerant.

Figure 1-5. Photographs of Test Systems

Commercial Roof-Top Air Conditioning System

Reciprocating Chiller

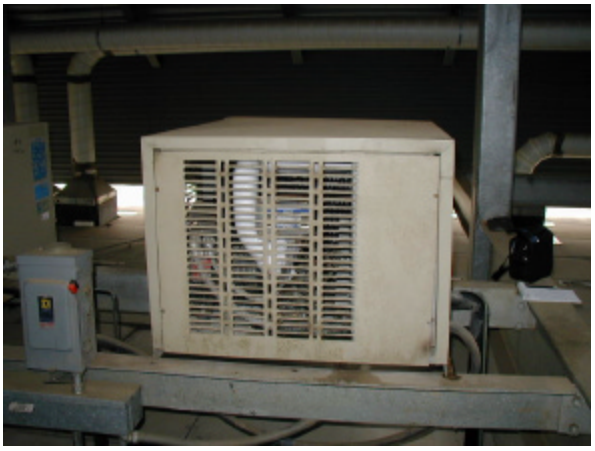

Supermarket Refrigeration System Compressor/Condenser Unit

The chiller system selected for testing uses a reciprocating compressor, and is also manufactured by Carrier. This water chiller is a moderately large (70 tons) system, with two compressors operating in series. The entire packaged system was installed in 1997, and operational and maintenance records are available for this unit. The chiller is specified to operate at ambient temperatures ranging between 0 and 125 ^{o}F. The maximum water temperature entering the cooler is specified to be 95 ^{o}F and the minimum leaving temperature is 40 ^{o}F. The SGM will be installed on one of the compressors; they are both charged with 70 lbs R-22 refrigerant.

Table 1-3. Profiles of Test Systems			
	Commercial-Scale Roof-Top Air Conditioning System	**Reciprocating Chiller**	**Supermarket Type Refrigeration System**
Manufacturer	Carrier	Carrier	Larkin
Model	50DKB074DAA600FM	30GT-070-500ka	OSH015OL5
Size / Capacity (nominal)	75 tons	70 tons	Approx. 3 tons
Number of Compressors Size of Compressors	2 (in series) 10 hp each	2 (in series) 7.5 hp each	1 0.75 hp
Refrigerant Charge	1st comp: 73.5 lbs 2nd comp: 64.5 lbs*	1st comp: 70 lbs* 2nd comp: 69 lbs	16 lbs
Refrigerant Type	R-22	R-22	R-12
Operating Pressures High Low	 410 psig 150 psig	 450 psig 278 psig	 400 psig 150 psig
Nameplate Voltage	460 volts	208/230 volts	208/230 volts
Compressor Electrical Data RLA[a] LRA[b]	 65.4 amps 345.0 amps	 147.7 amps 690 amps	 2.6 amps 19.9 amps
Condenser Electrical Data Number of Fans Horsepower FLA[c] LRA[b]	 5 1 hp each 13.5 amps -	 6 1 hp each 37.8 amps 186.4 amps	 1 - 2 amps -

* Test compressor where the SGM will be installed and verified
[a] Rated load amps
[b] Locked rotor amps
[c] Full load amps

The supermarket type test system serves a walk-in refrigerator, and is representative of systems used to store vegetables, meat, and dairy products. It is manufactured by Larkin, and uses a single compressor. This design is similar to various self-contained and walk-in systems commonly used in restaurants, fast food outlets, convenience stores, food service, and schools. The semi-hermetic compressor system is designed for outdoor installation and operation. The factory-installed sight glass is in brand new condition and is in a satisfactory location.

Prior to performance testing of the SGM, each test system will be verified to be operating per the original equipment manufacturers' specifications. This is required to ensure that potential malfunctions in the test systems will not change or affect the performance results of the SGM.

An independent contractor, who is certified to service both the Carrier and Larkin test systems, will be retained to assess the systems' operational condition prior to verification testing. The contractor will perform an on-site assessment to determine they are in good working condition (mechanically and electrically), and can provide cooling and refrigeration at or reasonably near the manufacturers' specifications. This assessment may require performing manufacturer recommended system diagnostic checks and collecting operational data to substantiate the reliable performance of each system. Based on this assessment and recommendations of the certified reviewer, corrective actions will be taken in cooperation with NCSU to bring the equipment to specification.

The roof-top and chiller systems currently in operation at NCSU are equipped with factory installed sight glasses. KMC has elected to position the sight glass on all three test units in a vertical orientation. The roof-top air conditioning unit and the supermarket type refrigeration unit are factory equipped with vertically oriented sight glasses. Thus, no change was required for these units. However, the reciprocating chiller sight glass was changed from horizontal to vertical position. The GHG Center will maintain written records of material and labor expended in performing this activity such that actual costs for systems requiring re-location of sight glasses with the use of the SGM can be estimated. The SGM will be attached to the newly installed sight glasses prior to initiating verification test. Each monitor will be wired to the KMDigitial Controller, which will continuously monitor and log the sight glass conditions. The KMDigital Controller will relay low refrigerant charge levels to a laptop computer, and time series refrigerant levels will be displayed on the computer screen. It will also provide an audible signal (buzzer) which will represent an alarm condition (i.e., SGM detected greater than 4.0 VDC signal for more than 60 seconds). Installation of the SGM, KMDigital Controller, and other apparatus will be performed by KMC.

Table 1-4 lists key conditions that is used by the KMDigital Controller and software system to sound an alarm. To summarize, after the chiller operates for a period of at least ten minutes with a full sight glass (i.e., voltage signal less than or equal to 4.0 VDC is measured), refrigerant will be removed from the chiller in prescribed increments until the buzzer sound from the KMDigital Controller is heard. KMC will set the alarm at the point at which greater than 4.0 VDC signal is received from the SGM for at least 60 seconds. After each refrigerant withdrawal, the NCSU operator will wait five minutes and listen for the buzzer from the KMDigital Controller. Once the buzzer sound is heard (i.e., low charge levels are detected by the SGM), the GHG Center Field Team Leader will stop the test run and record the total withdrawal and other test parameters on the appropriate field data forms such that leak detection sensitivity can be computed. This approach is intended to eliminate guess-work from testing personnel in determining the levels at which the SGM alarms.

Table 1-4. KMC Operating Procedures for Determining Low Refrigerant Charge

	Commercial-Scale Roof-Top Air Conditioning System	Reciprocating Chiller	Supermarket Type Refrigeration System
Length of time to wait after initial compressor startup (minutes)	10	10	10
Voltage at which the SGM alarms (volts) *	> 4.0 VDC *	> 4.0 VDC *	> 4.0 VDC *

* After each unit operates for a period of at least ten minutes with a full sight glass (i.e., voltage signal is less than or equal to 4.0 VDC), refrigerant will be removed from the unit in prescribed increments until an audible buzzer alarm, initiated by the KMDigital Controller and software system, is heard. The alarm level represents the flash level at which the SGM monitored voltage readings exceed 4.0 VDC for more than 60 seconds.

1.6. ORGANIZATION

The project team organization chart is presented in Figure 1-6. A discussion of the functions, responsibilities, and lines of communication between the organizations and individuals associated with this verification test is provided in Figure 1-6.

Figure 1-6. ` Project Organization

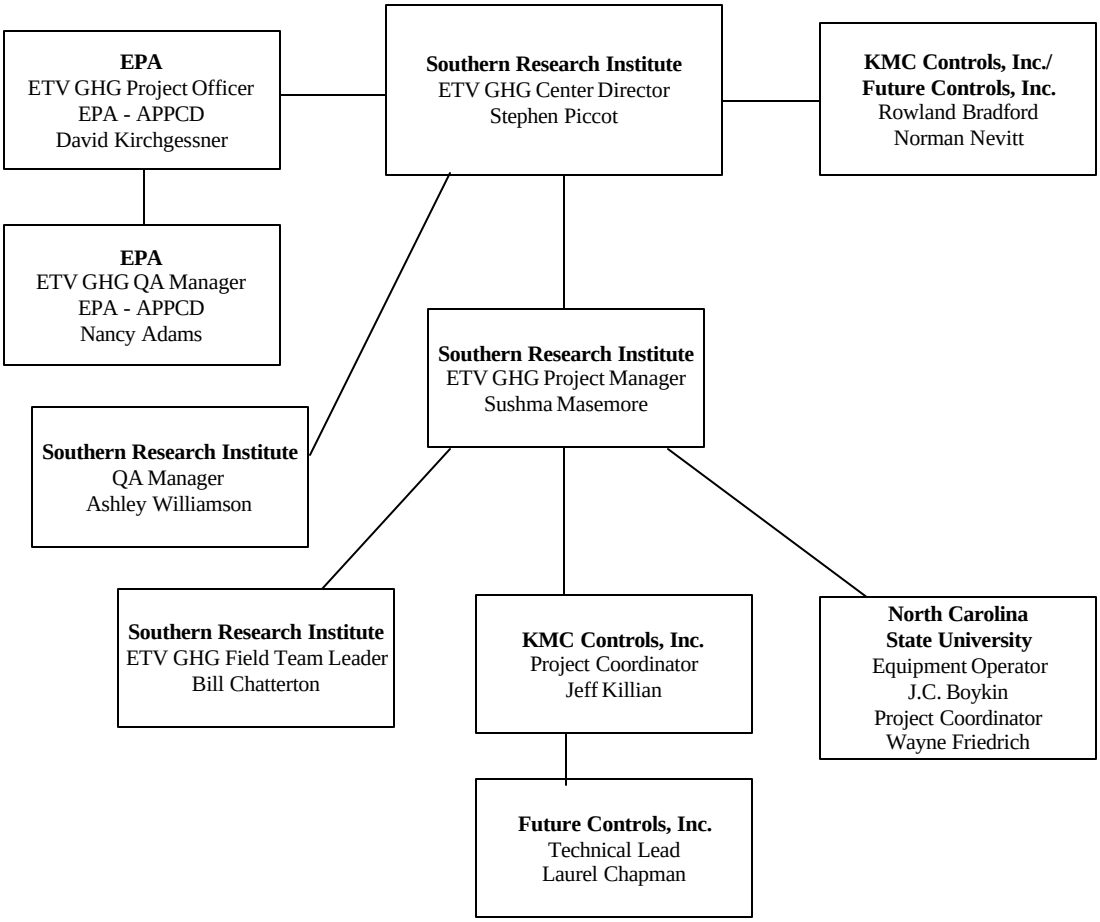

Southern Research Institute's Greenhouse Gas Technology Center has overall responsibly for planning and ensuring the successful implementation of this verification test. The GHG Center will ensure that effective coordination occurs, schedules are developed and adhered to, effective planning occurs, and high quality independent testing and reporting activities occur. Ms. Sushma Masemore, of the GHG Center, will have the overall responsibility as the Project Manager, under supervision of Mr. Stephen Piccot, the GHG Center Director. She will be responsible for quality assurance activities, including determination of data quality objectives (DQOs) and associated data quality indicators (DQIs) from on-site data collected by the Field Team Leader prior to the completion of the test. Ms. Masemore will follow the procedures outlined in Sections 2 and 3 to make this determination, and will have full authority to initiate repeat tests as determined necessary. Should a situation arise during the test that could affect the health or safety of any personnel, Ms. Masemore will have full authority to suspend testing. Ms. Masemore will be responsible for maintaining communication with KMC, EPA, and NCSU.

Mr. Bill Chatterton, also of the GHG Center, will serve as the Field Team Leader, and will support Ms. Masemore's data quality determination activities. Mr. Chatterton will provide field support activities related to all measurements data collected. Mr. Chatterton has over 16 years experience in environmental testing with emphasis on emissions testing, flow measurements, field verifications, project management,

and field team management. Mr. Chatterton will be responsible for ensuring that performance data, collected by measurements instruments, are based on procedures described in Sections 2 and 4. He will also coordinate the procedures followed by NCSU technicians to ensure the evacuation and charging procedures described in this Test Plan are adhered to.

SRI's QA Manager, Mr. Ashley Williamson, will review this Test Plan and test results from the verification test. He will conduct an Audit of Data Quality (ADQ), as required in the GHG Center's QMP. Mr. Williamson will review all data quality determinations made by the Project Manager as part of the independent ADQ and, at that time, will independently verify DQI/DQO determinations using field notes, log forms, and other data. Further discussion of these audits is provided in Section 4.3. Results of the internal audits and corrective actions taken will be reported to the GHG Center Director, and used to prepare the final Verification Report.

EPA's APPCD is providing QA support for this verification. The EPA APPCD Project Officer, Dr. David Kirchgessner, is responsible for obtaining final approval of the project Test Plan and Verification Report. The EPA QA Manager also reviews and approves the Test Plan and final Verification Report. The EPA QA Manager reviews the Test Plan to ensure that it meets the ETV program's QMP requirements and represents sound scientific practices. At the discretion of the EPA QA Manager, an external audit of this verification may be conducted.

NCSU will ensure the test units are available and accessible to the GHG Center for the duration of the test period. NCSU will operate each system and perform refrigerant withdrawal and charging activities as outlined in Section 2.0. KMC will install the sight glass and the monitor and ensure the safe operation of the device. KMC will be present during the test, and will provide on-site support as needed to resolve potential malfunctions in their system. NCSU and KMC will review the Test Plan and final Verification Report, and provide written comments on each document.

1.7. SCHEDULE OF ACTIVITIES

Figure 1-7 presents the schedule of activities. A site survey visit has already been completed. Field testing is scheduled to begin in July 2001. Although not expected, delays may occur for various reasons, including mechanical failures at the site, weather, and operational issues. Should significant delays occur, the schedule will be updated and all participants will be notified.

Figure 1-7. Project Schedule

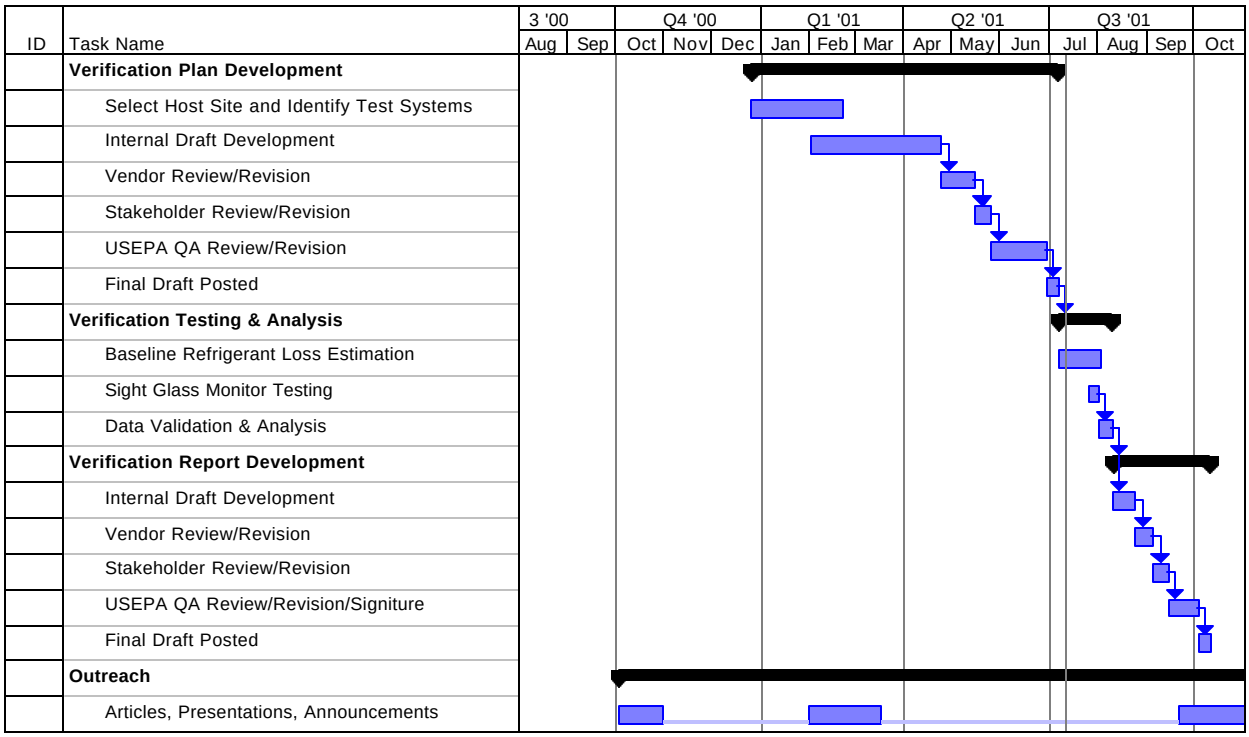

2.0 VERIFICATION APPROACH

2.1. REFRIGERANT LEAK DETECTION SENSITIVITY

Refrigerant leak detection sensitivity is defined as the percentage of full charge at which the SGM will detect low refrigerant levels and sound an alarm. To verify this parameter, the GHG Center will measure the full charge of each test compressor, and systematically draw out an incremental quantity of refrigerant until a low charge alarm is indicated. The ratio of the weight of refrigerant withdrawn at the point of monitor alarm divided by the weight of full charge will represent the leak detection sensitivity of the monitor.

The measurement procedures associated with quantifying refrigerant leak detection sensitivity require the use of EPA certified refrigerant evacuation and charging procedures. This consists of using approved refrigerant recovery equipment, recovery cylinders, pressure and temperature gauge manifold, and trained operators. These requirements will be met using NCSU trained operators and certified equipment. Figure 2-1 illustrates a schematic of the key procedures that will be followed.

The first step will be to evacuate the refrigeration system after identifying and fixing potential leaks present in the system. Screening for existing leaks in piping, fittings, valves, and other accessories will be performed according to industry accepted methods (e.g., hand held electronic leak detector). Following this, the system will be completely evacuated using an EPA certified refrigerant recovery system and manifold with gauges. The refrigerant will be collected in a pre-weighed EPA certified evacuation cylinder (100 lb capacity), and the final weight of the refrigerant filled cylinder will be measured and recorded. The entire evacuation process will require approximately 1 hour of operator time.

The second step will be to charge the system using procedures described in Section 2.2.1. Prior to charging, it is necessary to remove air and moisture present in the refrigeration system with the use of a vacuum pump. Removal of moisture is critical because it can cause freeze-up and corrosion in a system. Moisture can be picked up by the refrigerant and transported through the refrigerant line in a fine mist, freezing at and clogging the expansion valve. Liquid water can corrode the compressor.

The vacuum pump removes moisture by lowering the pressure within the system and vaporizing the moisture, then exhausting it along with air. After removing moisture and air, the system will be held under vacuum for 15 minutes to verify that it is leak tight. Then, the system will be charged with refrigerant. With the test compressors and unloaders operating at a full load condition, refrigerant will be added incrementally to the chiller until the signal from the SGM indicates a voltage of 4.0 VAC or less for more than 15 seconds during a 5-minute period (i.e., sight glass is clear and the system is charged properly). Measured pressure and line current readings will be compared with manufactured rated specifications to ensure the system is charged to manufacturer's recommendations. If additional refrigerant is needed to achieve full charge, NCSU will make available a second cylinder filled with the required refrigerant type whose content will be added to ensure full charge. Total charge injected into the system will be computed as the difference between the initial and final weight(s) of the evacuation cylinder(s). Measurements will be made using an industrial grade digital scale with a capacity of 100-lbs; accuracy of ± 0.02 percent of reading and ± 0.005 lb display error.

Figure 2-1. Refrigerant Leak Detection Sensitivity Testing Procedures

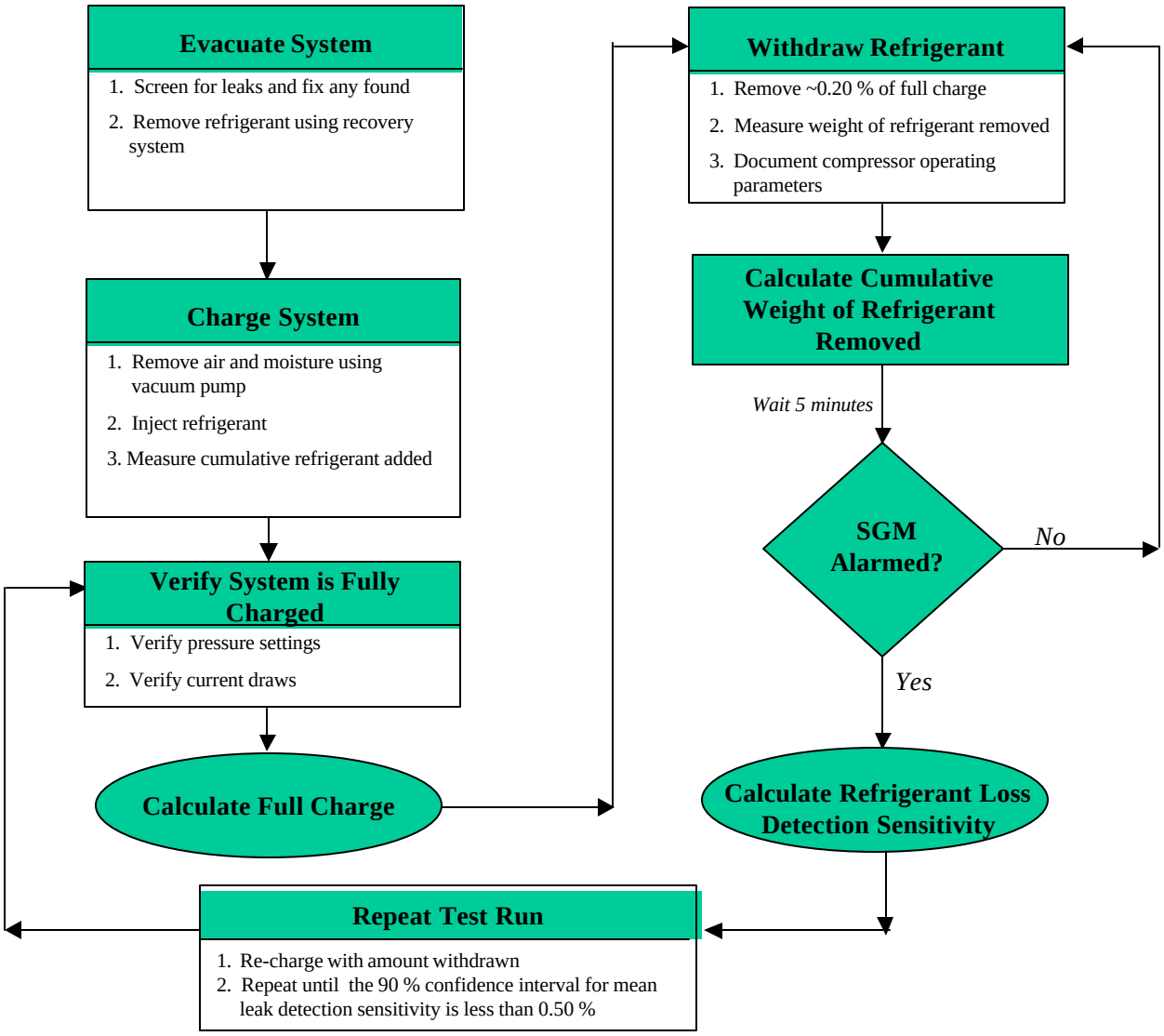

Once the test system operation is verified to be fully charged, refrigerant will be withdrawn at target increments of about 0.20 percent of the full charge into a pre-weighed, evacuated test canister (30-lb capacity). The weights of the test canister containing the refrigerant will be measured and recorded at the end of each withdrawal, using the same 100-lb scale. The refrigeration system will be allowed to operate for 5 minutes such that bubbles, generated from removal of the refrigerant, are given sufficient time to reach the sight glass area. The GHG Center will wait to determine if the NCSU operator observes an audible alarm from the KMDigital Controller. If an alarm is heard, the GHG Center will stop the run, determine the total weight of refrigerant withdrawn, and compute leak detection sensitivity. If the SGM does not alarm to indicate a low charge, another withdrawal (equivalent to the target weight) will be made. Throughout these measurements, manual readings of compressor operating characteristics will be

performed and recorded to ensure the system operating conditions are similar between successive test runs.

Table 2-1 summarizes the number and amounts of refrigerant withdrawals expected to be made for each refrigeration/air conditioning system. The 0.20 percent target withdrawal rate is selected based on KMC's input that the SGM will likely alarm when the charge has diminished by 1 to 5 percent of full charge, and will enable multiple withdrawals to be made before the alarm occurs. Actual withdrawal rate will be determined during the test, but the GHG Center will ensure that a minimum of 3 to 5 withdrawal increments are made prior to alarm. In the example shown in Table 2-1, the target withdrawals are increased to 0.60 percent of full charge after 2.00 percent of full charge has been withdrawn to save testing time. This incremental withdrawal rate increases to 0.80 percent of full charge for total withdrawals between 5.00 and 10.00 percent. If the SGM does not alarm after more than 10.00 percent of the full charge has been withdrawn (i.e., the EPA proposed allowable leak rate for most new systems), the test run will be concluded. In this situation, it will be concluded that the monitor is unable to detect an alarm at a low refrigerant charge. Conversely, leak detection sensitivity, corresponding to the withdrawal rate at which the SGM alarms, will be computed as shown below:

$$\text{Leak Detection Sensitivity}(\%) = \frac{\text{refrigerant lost at the point of monitor alarm (lb)}}{\text{full charge of system (lb)}} x\,100 \qquad (Eqn.1)$$

Table 2-1. Example Charge Leak Detection Sensitivity Results

	Roof-Top AC System				Reciprocating Chiller				Supermarket Type Refrigeration System			
Full Charge	64.5 lbs				70 lbs				16 lbs			
Target Amount to Withdraw:	0.20% of full charge 0.13 lbs				0.20% of full charge 0.14 lbs				0.20% of full charge 0.03 lbs			
Withdrawl Number	Initial Weight of Test Canister	Cumulative Refrigerant Withdrawn	Final Weight of Canister	% of Full Charge Removed	Initial Weight of Test Canister	Cumulative Refrigerant Withdrawn	Final Weight of Canister	% of Full Charge Removed	Initial Weight of Test Canister	Cumulative Refrigerant Withdrawn	Final Weight of Canister	% of Full Charge Removed
	lbs	lbs	lbs		lbs	lbs	lbs		lbs	lbs	lbs	
1	10.00	0.13	10.13	0.20%	10.000	0.14	10.14	0.20%	10.000	0.03	10.03	0.20%
2		0.26	10.26	0.40%		0.28	10.28	0.40%		0.06	10.06	0.40%
3		0.39	10.39	0.60%		0.42	10.42	0.60%		0.10	10.10	0.60%
4		0.52	10.52	0.80%		0.56	10.56	0.80%		0.13	10.13	0.80%
5		0.65	10.65	1.00%		0.70	10.70	1.00%		0.16	10.16	1.00%
6		0.77	10.77	1.20%		0.84	10.84	1.20%		0.19	10.19	1.20%
7		0.90	10.90	1.40%		0.98	10.98	1.40%		0.22	10.22	1.40%
8		1.03	11.03	1.60%		1.12	11.12	1.60%		0.26	10.26	1.60%
9		1.16	11.16	1.80%		1.26	11.26	1.80%		0.29	10.29	1.80%
10		1.29	11.29	2.00%		1.40	11.40	2.00%		0.32	10.32	2.00%
11		1.68	11.68	2.60%		1.82	11.82	2.60%		0.42	10.42	2.60%
12		2.06	12.06	3.20%		2.24	12.24	3.20%		0.51	10.51	3.20%
13		2.45	12.45	3.80%		2.66	12.66	3.80%		0.61	10.61	3.80%
14		2.84	12.84	4.40%		3.08	13.08	4.40%		0.70	10.70	4.40%
15		3.23	13.23	5.00%		3.50	13.50	5.00%		0.80	10.80	5.00%
16		3.74	13.74	5.80%		4.06	14.06	5.80%		0.93	10.93	5.80%
17		4.26	14.26	6.60%		4.62	14.62	6.60%		1.06	11.06	6.60%
18		4.77	14.77	7.40%		5.18	15.18	7.40%		1.18	11.18	7.40%
19		5.29	15.29	8.20%		5.74	15.74	8.20%		1.31	11.31	8.20%
20		5.81	15.81	9.00%		6.30	16.30	9.00%		1.44	11.44	9.00%
21		6.32	16.32	9.80%		6.86	16.86	9.80%		1.57	11.57	9.80%
22		6.84	16.84	10.60%		7.42	17.42	10.60%		1.70	11.70	10.60%

Leak detection sensitivity is the ratio of the "cumulative refrigerant withdrawn at the point of alarm" divided by the "full charge of the system" times 100. The test campaign specifies repeated measurements to develop a mean leak detection sensitivity for each of the three test units being evaluated. Individual measurements will vary about that mean according to the standard deviation of the individual measurements.

Leak detection sensitivity will be measured by weighing incremental refrigeration losses and total unit charges and, as such, errors in the measurement of weight will significantly impact the quality of the data used to determine this verification parameter. The uncertainty in leak detection sensitivity determination will depend on the accuracy of the 100-lb scale. The following two examples illustrate the chain of calculations performed and how weighing accuracy affects determination of leak detection sensitivity. The calculations are based on actual refrigerant and other weights likely to be encountered in the field. Examples for the largest and smallest refrigeration units are included to bound the results.

Consistent with vendor input, these calculations assume a low leak detection sensitivity of 1.00 percent of full charge will occur in the field (i.e., the SGM alarms when 1.00 percent of the unit's charge has been lost). In addition, they attempt to maximize potential error so the GHG Center can define the upper limits on error. This is done by assuming weight measurement errors are not random (e.g., always positive or always negative), and that errors in measuring total charge and refrigerant withdrawn combine to produce a worst case overall error (i.e., total charge error is positive while withdrawal error is negative and conversely, total charge error is negative while withdrawal error is positive). Based on the scale manufacturer's specifications, each weighing contains an error of ± 0.02 percent of reading and ± 0.005 lb display error. These errors are shown to the right of the weight values reported.

Example for the Large Refrigeration Unit (Reciprocating Chiller):

1. Full Charge Determination

Initial weight of an evacuated cylinder	=	20.00 ± 0.009 lbs
Final weight of cylinder and refrigerant	=	90.00 ± 0.023 lbs
Net weight of refrigerant full charge and additive error	=	70.00 ± 0.032 lbs

2. Cumulative Refrigerant Withdrawn at 1 Percent SGM Alarm Response

Initial weight of a smaller evacuated cylinder	=	10.00 ± 0.007 lbs
Weight of cylinder and refrigerant when SGM alarms	=	10.70 ± 0.007 lbs
Cumulative refrigerant withdrawn and additive error	=	0.70 ± 0.014 lbs

3. Calculated Leak Detection Sensitivity (%)

Cumulative refrigerant withdrawn/Full charge * 100	=	1.00 % ± 0.02 %

The error calculated for full charge determination in item 1 above, and for cumulative refrigerant withdrawn in item 2 above, are used to estimate the "worst case" error in the leak detection sensitivity shown in item 3 above. This represents a worst case because weighing errors are maximized (i.e., the additive values from items 1 and 2 above), and errors are not random. For example, measurement of full charge can produce a positively biased value of 70.032 lbs (70.000 + 0.032) while measurement of refrigerant withdrawn can produce a negatively biased value of 0.686 lbs (0.70 lbs. - 0.014 lbs.). If these errors did occur, the leak detection sensitivity calculated and reported would be 0.980 percent [100*(0.686/70.032)]. This is 0.02 percent lower than the true value of 1.00 percent, and represents a 2 percent error in the determination of leak detection sensitivity. Conversely, the "worst case" error would be the same if it is assumed that full charge measurements are negatively biased and refrigerant withdrawal measurements are positively biased.

The example above represents the maximum error expected for the largest unit tested. However, the supermarket type unit planned for testing has the smallest full refrigerant charge and the accumulated

errors have the largest effect on leak detection sensitivity. The example below illustrates the errors for the small unit.

Example for the Small Refrigeration Unit (Supermarket Type):

1. Full Charge Determination

Initial weight of an evacuated cylinder	=	20.00 ± 0.009 lb
Final weight of cylinder and refrigerant	=	36.00 ± 0.012 lb
Net weight of refrigerant full charge	=	16.00 ± 0.021 lb

2. Cumulative Refrigerant Withdrawn at 1 Percent SGM Alarm Response

Initial weight of a smaller evacuated cylinder	=	10.00 ± 0.007 lb
Weight of cylinder and refrigerant when SGM alarms	=	10.16 ± 0.007 lb
Cumulative refrigerant withdrawn	=	0.16 ± 0.014 lb

3. Calculated Leak Detection Sensitivity (%)

Cumulative refrigerant withdrawn/Full charge * 100	=	1.00 ± 0.09 %

Consistent with the example above, the maximum full charge could be 16.021 lbs and the minimum withdrawn could be 0.146 lb. If these errors did occur, then the leak detection sensitivity calculated and reported would be 0.911 percent [100*(0.146/16.021)], which is 0.089 lower than the true value of 1.00 percent. This represents about a 10 percent error in the determination of leak detection sensitivity.

Table 2-2 illustrates the computed errors in leak detection sensitivity for all three test systems at various alarm levels.

Table 2-2. Example Charge Leak Detection Sensitivity Uncertainty Data

	Roof-Top AC System				Reciprocating Chiller				Supermarket Refrigeration			
Full Charge	64.5 lbs				70 lbs				16 lbs			
Accuracy of full charge and refrigerant withdrawl measurements	+/- 0.02 % of reading plus +/- 0.005 lb display error				+/- 0.02 % of reading plus +/- 0.005 lb display error				+/- 0.02 % of reading plus +/- 0.005 lb display error			
Withdrawl Number	Cumulative Refrigerant Withdrawn		% of Full Charge Removed		Cumulative Refrigerant Withdrawn		% of Full Charge Removed		Cumulative Refrigerant Withdrawn		% of Full Charge Removed	
	lbs	+/-		+/-	lbs	+/-		+/-	lbs	+/-		+/-
1	0.13	10.87%	0.20%	0.02%	0.14	10.02%	0.20%	0.02%	0.03	43.77%	0.20%	0.09%
2	0.26	5.45%	0.40%	0.02%	0.28	5.02%	0.40%	0.02%	0.06	21.90%	0.40%	0.09%
3	0.39	3.64%	0.60%	0.02%	0.42	3.35%	0.60%	0.02%	0.10	14.60%	0.60%	0.09%
4	0.52	2.73%	0.80%	0.02%	0.56	2.52%	0.80%	0.02%	0.13	10.96%	0.80%	0.09%
5	0.65	2.19%	1.00%	0.02%	0.70	2.02%	1.00%	0.02%	0.16	8.77%	1.00%	0.09%
6	0.77	1.83%	1.20%	0.02%	0.84	1.69%	1.20%	0.02%	0.19	7.31%	1.20%	0.09%
7	0.90	1.57%	1.40%	0.02%	0.98	1.45%	1.40%	0.02%	0.22	6.27%	1.40%	0.09%
8	1.03	1.38%	1.60%	0.02%	1.12	1.27%	1.60%	0.02%	0.26	5.49%	1.60%	0.09%
9	1.16	1.23%	1.80%	0.02%	1.26	1.13%	1.80%	0.02%	0.29	4.88%	1.80%	0.09%
10	1.29	1.11%	2.00%	0.02%	1.40	1.02%	2.00%	0.02%	0.32	4.40%	2.00%	0.09%
11	1.68	0.85%	2.60%	0.02%	1.82	0.79%	2.60%	0.02%	0.42	3.39%	2.60%	0.09%
12	2.06	0.70%	3.20%	0.02%	2.24	0.65%	3.20%	0.02%	0.51	2.75%	3.20%	0.09%
13	2.45	0.59%	3.80%	0.02%	2.66	0.55%	3.80%	0.02%	0.61	2.32%	3.80%	0.09%
14	2.84	0.51%	4.40%	0.02%	3.08	0.47%	4.40%	0.02%	0.70	2.01%	4.40%	0.09%
15	3.23	0.45%	5.00%	0.03%	3.50	0.42%	5.00%	0.02%	0.80	1.77%	5.00%	0.10%
16	3.74	0.39%	5.80%	0.03%	4.06	0.36%	5.80%	0.02%	0.93	1.53%	5.80%	0.10%
17	4.26	0.35%	6.60%	0.03%	4.62	0.32%	6.60%	0.02%	1.06	1.35%	6.60%	0.10%
18	4.77	0.31%	7.40%	0.03%	5.18	0.29%	7.40%	0.02%	1.18	1.20%	7.40%	0.10%
19	5.29	0.28%	8.20%	0.03%	5.74	0.26%	8.20%	0.03%	1.31	1.09%	8.20%	0.10%
20	5.81	0.26%	9.00%	0.03%	6.30	0.24%	9.00%	0.03%	1.44	0.99%	9.00%	0.10%
21	6.32	0.24%	9.80%	0.03%	6.86	0.22%	9.80%	0.03%	1.57	0.91%	9.80%	0.10%
22	6.84	0.22%	10.60%	0.03%	7.42	0.21%	10.60%	0.03%	1.70	0.85%	10.60%	0.10%

Number of Test Runs Per Refrigeration Unit:

The refrigerant recovered in the test canister will be charged back to the system at the conclusion of each test run. Field procedures associated with this activity are similar to those to be used in charging the system after evacuation activities are completed. After all the refrigerant is injected back into the system, the system will be verified to be fully charged, and a new test run will be conducted. During at least one of the repeat test runs, the wait period between withdrawals will be increased to 30 minutes as the total withdrawal approaches the alarm point. This will allow the system to reach equilibrium between the remaining refrigerant withdrawals and ensure that the SGM produces a stable alarm condition. For example, if the SGM alarmed after six withdrawals, the wait period after the fourth, fifth, and sixth withdrawals will be increased from 5 to 30 minutes for at least one test run. The 30 minute wait period is not recommended for all withdrawals to minimize costs and to allow completion of all verification testing within a 10 hour time period.

The GHG Center anticipates that individual leak detection sensitivities measured during field tests could range from 1 to 10 percent, but that significant variability could occur from one test run to the next. The test strategy strives to produce representative mean leak detection sensitivities, but variability due to measurement error, refrigeration system operational changes, ambient changes, monitor detection performance variability, and other factors, will require that sufficient data be collected to support the calculation of representative mean leak detection sensitivities. The overall degree of variability expected is unknown, but KMC and stakeholders assisting the GHG Center have agreed that sufficient data should be collected to ensure a reasonable standard deviation exists in the set of measurements used to determine mean leak detection sensitivities for each unit.

Individual test results will fall within a range of values (confidence interval) around the mean of all test results. Confidence intervals include an estimate of the proportion of test results expected to fall within the given interval (i.e., "90 percent of the individual results are within 0.30 times the mean test result"). The confidence interval depends on the sample standard deviation divided by the square root of the number of samples. For a given standard deviation, larger number of test results generally tend to reduce the size of the confidence interval. For a data set with a large standard deviation, however, even a large number of tests cannot reduce the size of the confidence interval below certain limits. The GHG Center must strike a balance between determining a reasonable confidence interval and conducting a verification test that all can afford.

Based on the GHG Center's extensive experience in testing industrial equipment under actual field conditions, it is reasonable to expect 90 percent of the observed test results to fall within 0.30 times the mean; that is, if the mean leak detection sensitivity is 1.00 percent, 90 percent of the test results should be between 0.70 and 1.30 percent. This range, or confidence interval (abbreviated *e* below), will be used to determine the number of tests to conduct on each unit, and will also be used to define the completeness objective for leak detection sensitivity (discussed in Section 3.1.1). The confidence interval depends on the sample standard deviation and the number of test runs conducted as follows:

$$e = t_{.05,n-1}\left(\frac{s}{\sqrt{n}}\right) \qquad \text{(Eqn. 2)}$$

Where:

e = 0.30 times the mean of all test runs
$t_{.05,n-1}$ = 90 % T distribution value (see below)
s = sample standard deviation

n = number of test runs

n	$t_{.05,n-1}$
2	6.314
3	2.920
4	2.353
5	2.132

Test runs will be repeated until the value for *e* is less than 0.30 times the mean leak detection sensitivity. If this cannot be achieved, significant variability will be indicated, and the GHG Center will stop testing after 5 valid runs have been completed.

2.1.1. Determining Full Charge of the Test System

Access to the closed refrigeration system is provided using an industry standard manifold gauge system. The manifold gauge system is universally recognized as the instrument for testing air conditioning equipment. It is used for checking operating pressures, adding or removing refrigerant, adding oil, and performing other necessary operations such as leak testing. Figure 2-2 illustrates the gauge manifold system that will be used in the verification.

Figure 2-2. Refrigeration System Access Equipment

Gauge Manifold

(Source: Imperial Eastman)

Refrigeration Hoses

(Source: Robinaire)

The gauge manifold has five connections. The two top connections hold the compound and high-pressure gauges. The compound gauge (colored blue) is placed on the left side, and reads pressures on the low-pressure or suction side of the system (30 inches Hg to 350 psig) as shown in Figure 2-3. The high-pressure gauge (colored red) reads pressures on the high or discharge side of the system from 0 to 500 psig. The bottom of the manifold has three connections, which are attached to high-vacuum hoses capable of being leak tight to 50 microns Hg or less. The left hose (colored blue), is connected to the low side of the refrigeration system. The right hose (colored red) is connected to the high side of the system.

The center hose serves multiple functions, including evacuating, charging, and leak testing the system. It is yellow and is attached to a charging cylinder, vacuum pump, recovery unit, or other containers.

The manifold system is attached to the refrigeration system at factory-installed service valves on the suction and discharge sides of the compressor. The valves can be either a manually operated stem shutoff valve or a Schraeder type valve. The valve has a cap for the fitting to ensure a leak proof operation occurs, and is designed such that service operators can quickly check system conditions without disrupting the unit's operation. The hoses have quick-connect low-loss hose adapters which are attached to the Schrader valves, and are equipped with check valves to prevent venting of refrigerant. According to the American Refrigeration Institute (ARI), this is an acceptable method for reducing the refrigerant loss when connecting or disconnecting the service valves. The refrigerant hoses are 70 inches in length and have a 1/4-inch inner diameter.

Figure 2-3. Simplified Diagram of Refrigeration Manifold System

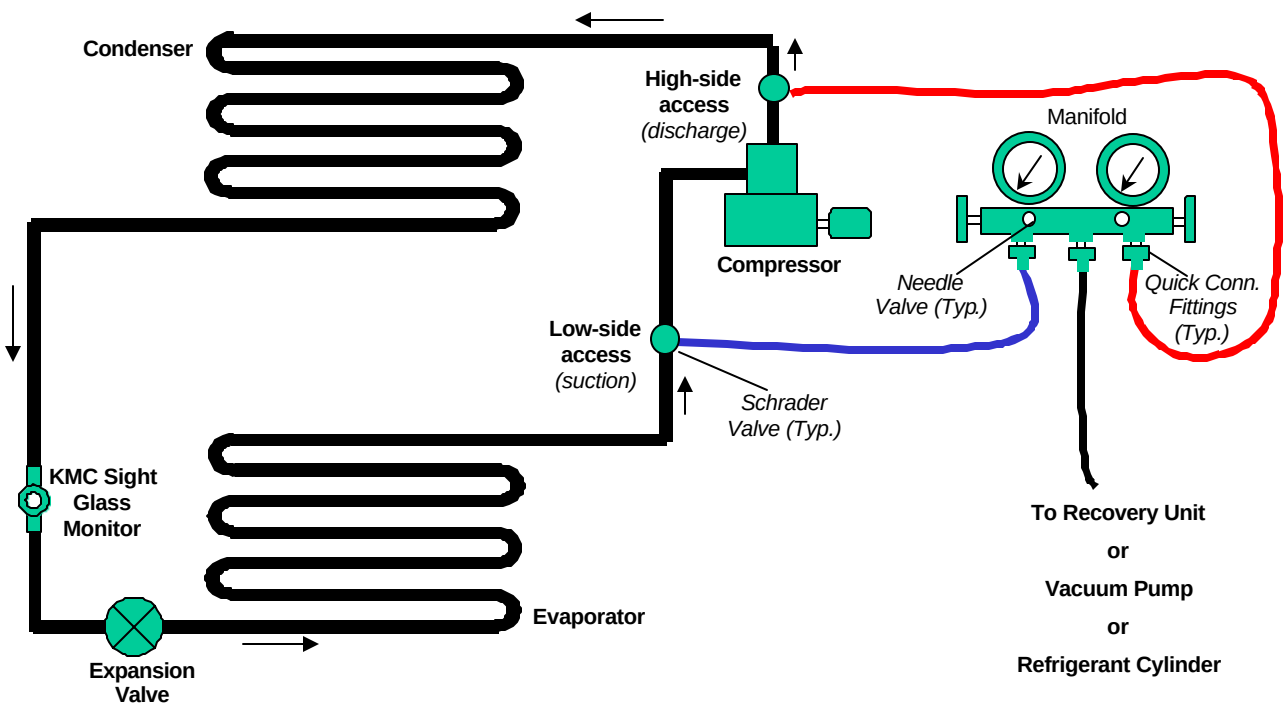

By opening and closing the refrigerant valves on gauge manifolds A and B (Figure 2-4), different refrigerant flow patterns and service activities can be performed. The valving is arranged such that when the valves are closed, the center port on the manifold is closed to the gauges (valve position A). When the valves are in the closed position, gauge ports 1 and 2 are still open to the gauges, permitting the gauges to register system pressures. A system is determined to be properly charged by ensuring that pressure gauge readings are consistent with manufacturer-specified values. The low and high side measurements help determine if the proper charge exists with the system operating. Normal pressure readings on an air conditioning R-22 unit ranges between 65 and 80 psi pressure on the low side, also called the compound gauge, and 175 to 350 psi on the high side. The gauges are constructed such that both pressure and temperature readings can be made simultaneously. Each gauge displays the condensing and evaporating

temperatures on their inner rings and pressures on the outer rings. Manipulation of gauge manifold valves is also performed to evacuate and charge the refrigeration system.

Figure 2-4. Valve Positions For Full Charge Determination

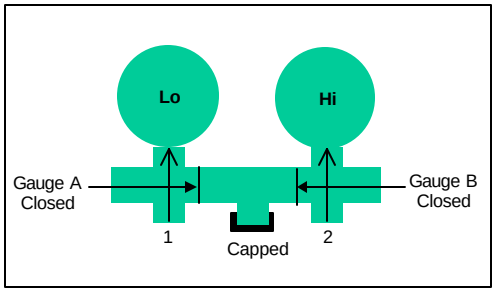

For Pressure Gauge Reading

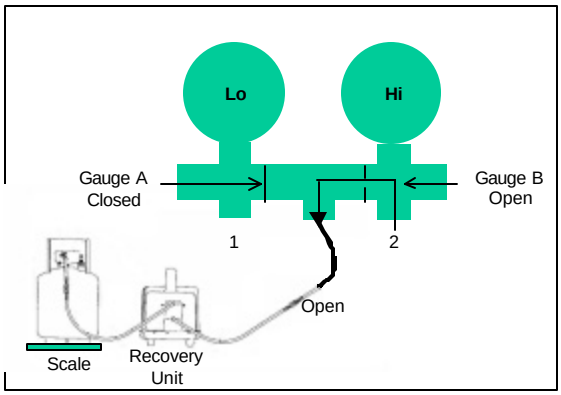

For Purging or Removing Refrigerant

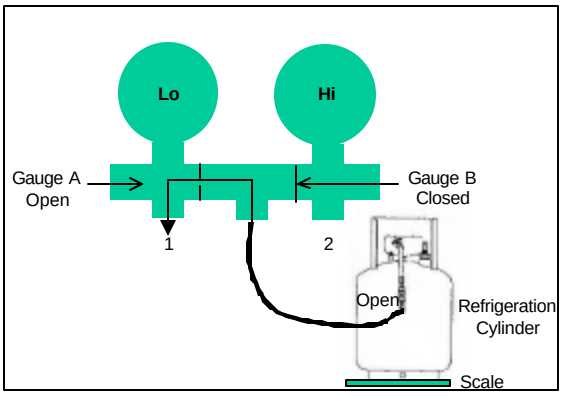

For Charging Refrigerant

At the start of verification test, the gauge manifold will be installed as shown in Figure 2-5. The entire refrigeration system will be screened for leaks using a hand held leak detector (described in Section 2.1.2.2). If any leaks are found, the GHG Center will record the location of the leaks, and NCSU operators will fix the leaks. An empty evacuation cylinder, with the capacity to hold 70 lbs of refrigerant, will be placed on the 100-lb scale (described in Section 2.1.2.1). The initial weight of the cylinder and the attached hose will be recorded in log forms.

The system will then be evacuated by removing refrigerant into the empty cylinder. Complete evacuation of a refrigeration system is time consuming, and can take over an hour for a 75 ton system. To reduce recovery time, both service valves can be left open and the center opening can be attached to an EPA certified recovery system, described in Section 2.1.2.3. With the system off, this would allow the recovery system to remove refrigerant from both the low side and the high side at the same time. This arrangement is reported to be effective in performing complete evacuation, as required during the verification test. Once the pressures have equalized on both sides, the remaining refrigerant can be evacuated by setting the valve position according to Figures 2-4 and 2-5. In this arrangement, the low-side valve is closed and the high side valve is open, allowing the refrigerant to pass through the high side

of the manifold and the center port connection. The system will be verified to be completely evacuated when the refrigerant levels equivalent to the unit capacity (Table 1-3), have been transferred into the cylinder. The final weight of the cylinder will be measured and recorded. Appendices B-1 through B-3 contain field testing procedures and log forms for evacuating the system.

Figure 2-5. Refrigerant Evacuating

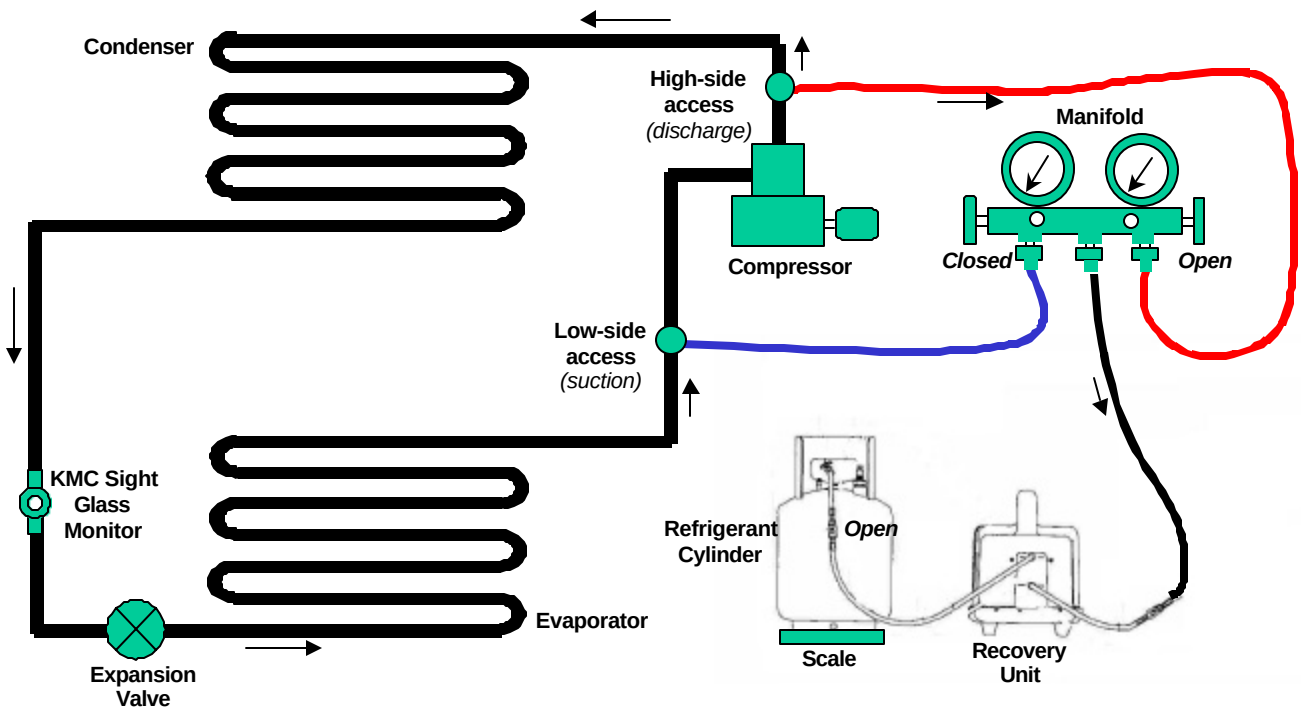

Prior to charging the refrigerant back into the system, air and moisture will be removed with the use of a vacuum pump (see Section 2.2.1.4 for description). When air and moisture are completely purged, the refrigeration system is left under vacuum conditions (about 50 microns Hg). During charging, this condition enables the refrigerant to freely enter the system due to pressure differences between the charging cylinder and the refrigeration system.

To charge a refrigeration system, the system is connected to the gauge manifold as shown in Figure 2-6. The hoses are purged up to the manifold using procedures described in Appendix C-1. Both valves on the gauge manifold remain open while the compressor is off. When the refrigerant is released from the cylinder, refrigerant vapor in the cylinder flows into both sides of the system. The refrigerant will stop flowing when the pressures equalize and no more refrigerant can enter the system. At this point, the high side manifold valve (Figures 2-4 and 2-6), will be closed to continue the balancing of the vapor charging through the low side of the system. The scale on which the charging cylinder is resting will be read and its weight recorded to determine the amount of charge that has entered the system and how much more is needed. According to ARI, less than 50 percent of the required charge is completed at this stage.

Figure 2-6. Refrigerant Charging

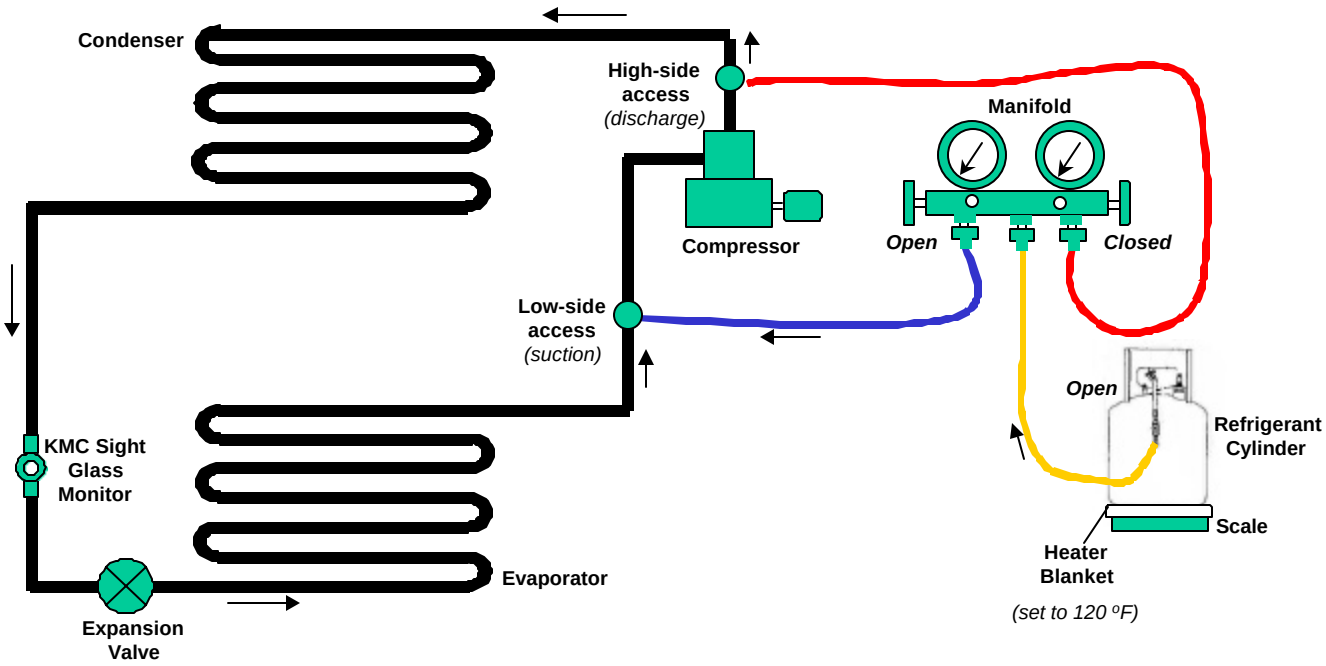

The balance of the vapor refrigerant will be charged with the compressor running. This process is slow, and one recommended method of increasing the charging rate is to add heat to the cylinder. This is done by placing the cylinder on a heating blanket or in a water bath at a temperature not to exceed 120 °F. The high and low-pressure gauge readings will be watched closely throughout this procedure until the readings are equivalent to manufacturer-specified levels (Table 1-3). The readings should approach the required levels as most or all of the refrigerant equivalent to the capacity of the system is transferred. The final weight of the cylinder will be measured and recorded in log forms. Appendix B-3 contains field testing procedures and log forms for injecting refrigerant back into the system, and determining the total charge of the system.

After charging the system, it is necessary to verify that the system is operating normally before monitor verification testing is initiated. This process is intended to ensure the refrigeration system operating conditions are consistent between successive leak detection sensitivity test runs, and that the system is fully charged per the manufacturer's recommendations. The current draw of the compressor, which is a key indicator of the operating loads, will be measured and verified to be operating at manufacturer-specified levels (Table 1-3). The compressor current varies with the refrigerant charge in the unit and the operating pressures. The greater the charge, the higher the current draw. The current draw is less when the outdoor temperature is cool and the condensing pressure is low. As the temperature rises, the amount of current the compressor draws also rises (i.e., the compressor works harder because of increased compression pressure). The current drawn by the compressor will be measured with a probe (Amprobe, Model RS-3), manufactured by Amprobe Instruments. Comparison of actual current readings with maximum current rating for the compressor, as specified by the equipment manufacturer, will be made. The manufacturer-specified ratings (Table 1-3), as shown on the nameplate of each test equipment, state rated-load amps (RLA) or full-load amps (FLA). Actual current measured should not exceed these

ratings to prevent compressor overheat or burnout. Amprobe operating instructions are documented in Appendix C-3.

2.1.2. Refrigerant Leak Detection Sensitivity testing

After the system is verified to be charged and operating according to manufacturer's recommendations, leak detection sensitivity testing will be initiated. To perform this test, it will be necessary to have the compressor running while the refrigerant withdrawals are occurring. This will be accomplished by physically disabling the automatic thermostatic controller which determines whether the compressor turns on or off, and overriding this with manual control. NCSU operators will then be able to manually turn the compressor system on when needed (note the design of each system is such that it will operate at full load conditions). During the test, measurements of system operating conditions (e.g., pressures, temperatures, current draw) will be made at the beginning and end of each test run to ensure the system was operating under reasonably similar conditions throughout the test runs.

The equipment and procedures to be used for withdrawing refrigerant for leak sensitivity determination will be similar to the procedures described in Section 2.1.1 for evacuating the system. The valve positions will be similar (i.e., low side valve will remain closed and the high side valve will remain open). A recovery unit will not be required and a pre-weighed, smaller test cylinder (30 lb capacity) will be used. The test cylinder will be evacuated, and will remain in slightly negative pressure during the first few withdrawals. With the arrangement shown in Figure 2-5, vapor refrigerant will flow from the hose into the test cylinder due to pressure differentials in the canister and the high-pressure line. The control of refrigerant flow into the cylinder will be performed using a needle valve on the gauge manifold system, which allows precise control of relatively small amounts of refrigerant at the target withdrawal rates listed in Table 2-1. At the conclusion of each withdrawal, the weight of the test cylinder will be measured, and the system will be allowed to stabilize for 5 minutes. If the SGM alarms, the test run will be concluded, and leak detection sensitivity will be computed for that test run. The refrigerant will then be injected back into the system using the equipment and valve positions described earlier for charging the system.

If the SGM does not alarm, another withdrawal of target quantity will be made and the cumulative refrigerant withdrawn will be measured and recorded. The withdrawal process will be repeated until at least 10 percent of the full charge of the system is removed. If the SGM does not alarm at this point, the test will be concluded. Field testing procedures and the log form for leak detection sensitivity determination are provided in Appendix B-4.

During the leak detection sensitivity test runs, key operating parameters of each test system will be monitored and recorded at a rate of one reading per withdrawal. This includes measurement of suction and discharge pressures, outdoor temperature, and current draws. The purpose of collecting this data is to ensure that the system is operating at similar conditions between test runs, and verification test conclusions are based on the refrigerant withdrawal activities and not significant changes in compressor operation. A log form for documenting compressor operating parameters is provided in Appendix B-4.

2.1.2.1. Scale

A digital scale, manufactured by Digimatex, will be used to measure the total charge of each test system and refrigerant withdrawal amounts during leak detection sensitivity testing. The maximum rated capacity of the DI 28 S-SL model is 100 pounds, and the rated accuracy is ± 0.02 percent of reading and 0.005 lb display error. The manufacturer's precision (repeatability) specification is ± 1 digit or ± 0.02 lb. The scale to be used for the verification has been reconfigured to a 0.01 lb resolution for more accurate refrigerant weighings. It is recommended, however, that the repeatability remain at ± 0.02 lb based on

initial testing of the scale conducted at the GHG Center laboratory using NIST traceable weights. Its platform size is 13” x 17” x 3” (L x W x H), and is large enough to allow the 100-lb capacity refrigerant cylinder to remain in an upright position (Figure 2-7). It is battery powered and meets or exceeds Class III and OIML standards. Detailed operating procedures are well documented in the manufacturer’s operating manual, and will not be repeated here. The manual will be made available during field testing.

The scale will be newly purchased for this verification, and will be factory calibrated prior to shipment. A calibration certificate will be obtained from the manufacturer. Calibrations are performed using test weights that are traceable to the National Institute of Standards and Technology (NIST) through the North Carolina Department of Agriculture. Scale readings, before and after calibration, will be provided at the following applied loads: 5, 10, 15, 20, 25, 30, 50, 75, and 100 lbs. The GHG Center will review these calibration records to ensure the scale met the accuracy ratings.

Figure 2-7. Digital Scale

During the test, accuracy determination for the scale will be performed before each test run at each unit using NIST traceable calibration weights. The standard test weights will span the range of the scale (5, 10, 15, 20, 25, 30, 50, 75, and 100 lbs). Each of the scale's responses to the test weights must be within the accuracy specification ($\pm$ 0.02 percent of reading and $\pm$ 0.005 lb) for the scale to meet the accuracy requirement. Precision will be verified by two replicate weighings of four test weights at the end of each test run. Further discussion of data quality requirements and procedures is provided in Section 3.0

2.1.2.2. Refrigerant Leak Detector

A refrigeration or air conditioning system can leak at any place in the closed system. Examples include new copper tubing, compressor seals, valves/fittings, metering devices, and electrical terminal plates. According to ARI, the most common sources of leaks are caused by field installation of tubing, accessories, and replacement parts. Other sources of leaks are compressor service valves (e.g., two-way ball valves, Schrader valves), sight glass, and driers. The Clean Air Act, as enforced by the EPA, requires that all leaks be repaired. For the SGM verification, any existing leaks will be identified and eliminated to ensure accurate measurement of the test system’s full charge and charge withdrawals.

An electronic leak detector, manufactured by Robinair (Model 16500) will be used to leak test the entire system prior to initiating testing. The leak detector identifies the type of refrigerant detected, and complies with ASHRAE Standard 15-1992, which requires the use of an instrument of this type where air conditioning and refrigeration systems are installed. The leak detector has a visible alarm and LCD readout showing the actual gas concentration. The pump located in the handle draws air directly to the sensing tip, and no calibration is required. It is battery operated, and has both visual and audible signals which increase in frequency as the leak source is approached. Once a refrigerant leak is isolated, NCSU

operators will fix the leaks, and verify their repair during normal operation, before testing resumes. The leak detector will be used as a screening device only, and will not require field calibration. However, manufacturer recommended startup and check-out procedures will be provided during field testing as a handbook to the test personnel.

2.1.2.3. Refrigerant Recovery Unit

The recovery unit used to evacuate the system will be the same as or equivalent to the unit shown in Figure 2-8, manufactured by Robinair (Model 25200A). It is a compact, heavy duty recovery unit for high and medium pressure refrigerants such as those used in the verification. It is equipped with an oil-less compressor which does not require an oil change, thus eliminating the risk of cross-contamination between different refrigerants and oils. It is equipped with recessed, quick connect fittings to reduce refrigerant loss during hose hook-up and disconnecting steps. The recovery unit is hooked to a refrigerant cylinder (100-lb capacity) as shown in Figure 2-5, and is capable of recovering vapor from the high side (0.4 to 0.6 lbs/min) or low side (5 to 7 lbs/min). Operating procedures and quality control checks for the recovery pump are well documented in the manufacturer's operating manual, and are not repeated here. This manual will be made available and used by NCSU operators during the test.

Figure 2-8. Refrigerant Recovery Unit

(Source: Robinair)

2.1.2.4. Vacuum Pump

The vacuum pump to be used will be the same as or equivalent to the unit illustrated in Figure 2-9, and is manufactured by Robinair (Model 15400). The vacuum pump uses a thermistor vacuum gauge which allows pressure measurements to be made in microns of Hg. A micron of Hg is an industry adopted measurement method to read pressures below 29.5 inches Hg on the compound gauge. A micron is a unit of linear measure, which is equivalent to 1/25,400 of an inch and is based on measurement above total absolute pressure, as opposed to gauge pressure. The procedures to be followed for ensuring complete purge of air and moisture content are provided in Appendix C-2. An operations manual will be made available to all personnel during field testing.

Figure 2-9. Vacuum Pump

(Source: Robinair)

2.1.2.5. Ambient Measurements

Outdoor temperature and humidity measurements will be conducted to assess the consistency of ambient conditions during individual test runs. Building air conditioning demand, and the resulting load on the

refrigeration equipment, could change with changing ambient conditions. These are not critical measurements, but may be used to diagnose trends seen in the test data.

The instrument is an integrated temperature/humidity unit (Vaisala Model HMP 35A). It will be located in close proximity to the air intake of the condenser. The integrated temperature/humidity unit uses a platinum 100 ohm, 1/3 DIN RTD (resistance temperature detector) for temperature measurement. As the temperature changes, the resistance of the RTD changes. The integrated unit uses a thin film capacitive sensor for humidity measurement. The dielectric polymer capacitive element varies in capacitance as the relative humidity (RH) varies, and this change in capacitance is detected. The response time of the temperature and humidity sensors is 0.25 seconds. Its rated accuracy is ± 2 ^{o}F for temperature and ± 3 percent for RH. It will be wired to a Campbell data logger, whose content will be downloaded to a laptop computer. The instrument will be factory calibrated to NIST traceable standards for accuracy. Calibration certificates indicating conformance to these standards will be obtained from the laboratory and reviewed. QA/QC procedures for the operation of this instrument in the field are included in Section 3.1.1 and Appendix C-7. The temperature QC checks will consist of comparing the outdoor temperature readings with an independent co-located thermocouple instrument. Comparison of RH data with RH observed by the National Weather Service at the Raleigh-Durham International Airport (RDU) will provide a reasonableness check.

2.2. ESTIMATED POTENTIAL REFRIGERANT SAVINGS AND POTENTIAL COST SAVINGS

Operators of refrigeration equipment rely on different inputs to warn of excessive refrigerant loss. In extreme cases, equipment failure or product loss is the first indicator that refrigeration systems require maintenance. More commonly, operators rely on maintenance records and/or regularly scheduled inspections to indicate when systems require a refrigerant addition, and when excessive charge loss is occurring. To support wise purchase decisions, operators of refrigeration systems will likely want to know if the SGM can provide potential financial or other benefits compared to currently used methods for detecting refrigerant loss. Both the operator and environment would benefit if the monitor can reduce the amount of refrigerant leaking into the atmosphere. This could occur if the SGM warns of losses more rapidly than currently used detection methods and if system operators immediately respond to SGM alarm conditions.

To assess this issue, the GHG Center will estimate potential refrigerant savings associated with the use of the SGM. This will be accomplished by comparing the minimum refrigerant loss detectable by the monitor (determined as described above), with refrigerant losses and outcomes occurring under routine inspection programs. To avoid the cost and time required to determine the sensitivity of routine inspection programs, the GHG Center will use historical data maintained by NCSU. Operational records for the test systems and other similar equipment installed at the NCSU campus will be used in the verification. Specifically, electronic records documenting the results of routine inspections (dates of inspections, if refrigerant was added, amount of refrigerant added, the leaks located) are available for a minimum of 3 years of operation. Based on these data, the amount of refrigerant lost between charges will be determined and compared to the minimum loss detectable by the SGM. The difference between these two numbers will represent an estimate of the refrigerant savings or emission reductions attributable to the monitor. The cost savings associated with refrigerant savings will be estimated and reported, based on current national average market prices for refrigerant.

Refrigerant savings is defined as the average annual pounds of refrigerant that could potentially be saved using an SGM, and cost savings are defined as the cost of that refrigerant. In order to develop annual savings estimates, historical records of refrigerant recharge are used. Fortunately, the NCSU facilities operators have maintained electronic records since the test systems were installed in 1997 at the

Centennial Campus. Historical records for other similar systems of equivalent size and capacity are also available, and NCSU has agreed to provide these historical data for this verification, which includes:

- Quarterly records of inspections performed on each system
  - Date, unit ID
  - Refrigerant capacity
  - Type of maintenance performed
  - Records of repair orders issued
- Records of repairs performed on each system
  - Date
  - Fill amounts
- Operating Schedule
  - Year-round, days only, weeks only
  - Annual operating hours logged

Based on the review of historical data, the amount of refrigerant lost between charges will be determined and compared to the leak detection sensitivity measured for the SGM. The difference between these two numbers will be used to estimate refrigerant savings attributable to the monitor. Cost savings will be determined by multiplying the estimated refrigerant savings with current cost of refrigerant (North Carolina Available data: R-22 $3.75/lb; R-12 $34.13/lb; R-502 $31.69/lb).

The GHG Center recognizes that several factors may contribute to uncertainties in the historical data and thus, in this evaluation. Examples of confounding factors include (1) refrigerant service provider rounding-off the amount of refrigerant added, (2) pressure gauge or other instruments used to monitor charge loss and amount added could have malfunctioned, (3) gauge manifold and other charging equipment were not completely screened for leaks, (4) data transcription errors occurred, and (5) the weighing scale was not calibrated. It is also possible that system operators would not respond to SGM alarms in a timely fashion, thereby not realizing the full potential savings, or that they would simply recharge a system without performing repairs. It is beyond the scope of this verification to quantify all the uncertainties associated with each factor. The GHG Center will make every attempt to obtain historical data for a minimum of 3 systems similar to the size tested in the verification. This data will provide a range of potential savings estimates to be developed for a number of similar systems, and the Verification Report will note the various confounding factors.

2.2.1. Example Potential Savings Calculations

As an example, historical maintenance and repair records for four air conditioning systems identical to the roof-top test unit were obtained and analyzed. Figure 2-10 illustrates the results of quarterly inspections and repairs for one of these systems (Unit ID 798). Examination of the sample data shows that the refrigerant lost is due to small or fugitive leaks; the recharge requirements are a fraction of the system's capacity. Catastrophic failures usually result in the loss of the entire system charge and system shutdown. Such catastrophic losses will not be considered here because the SGM is designed to detect small or fugitive leaks. For this unit, refrigerant was added two times in each operating year since the unit was installed in 1997. Using normal maintenance practices, a total of 22.9 lbs of refrigerant was added in a period of 3 years.

If the unit was installed with a SGM, refrigerant savings could result through continuously monitoring the system for low charge levels and taking corrective actions to repair the leaks. Two assumptions will be made to estimate refrigerant savings with the SGM:

(1) SGM alarms half-way between two successive inspections (one of which found no leaks and the other detected low charge levels which was repaired during that inspection), and
(2) low charge condition detected by the SGM is immediately repaired, rather than wait for next scheduled inspection.

For example, in the 1997 operating year, the first quarterly inspection did not reveal low charge levels. However, 1.5 lbs of refrigerant was added during the second quarter's inspection. If the SGM had been monitoring the same system, the low charge conditions would have been detected sometime between the two inspection periods. If an operator fixed the leak immediately upon receiving an alarm by the SGM, an estimated savings of 0.75 lb of refrigerant would have occurred. This represents the difference between 1.5 lbs with the conventional practices and an estimated minimum detection level of 0.7 lb with the SGM.

Applying this analytical approach for the 3 years of operation, a total potential refrigerant saving of 22.10 lbs is estimated for Unit 798. Annually, this is equivalent to average savings of 7.4 lbs/yr (22.10 divided by 3 years).

Figure 2-10. Example Illustrating Refrigerant Savings Calculations

(Unit 798)

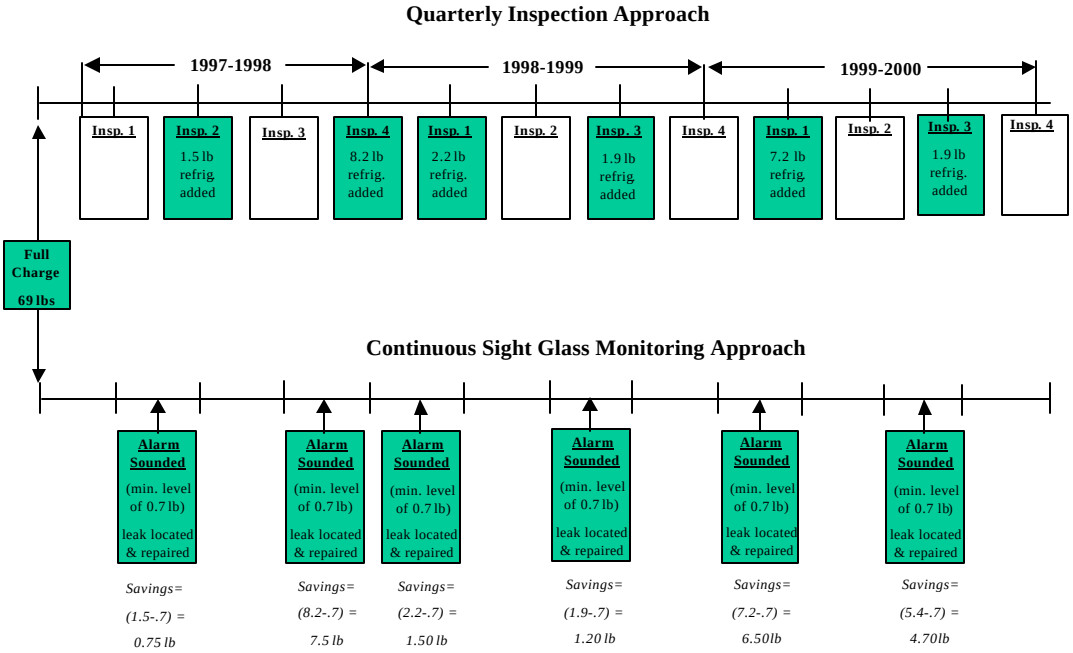

Total Refrigerant Savings = 22.10 lbs

Annual Average Refrigerant Savings = 22.10/ 3 = 7.4 lbs/yr

Annual average refrigerant savings will be computed in a similar manner for the remaining systems where maintenance and repair records are available. Table 2-3 summarizes hypothetical annual average savings for the four identical roof-top air conditioning systems. Actual savings will be computed during the verification, once NCSU makes records available.

Table 2-3. Hypothetical Annual Average Refrigerant Savings and Cost Savings for Multiple Roof-Top Air Conditioning Systems				
	Unit 798	**Unit 799**	**Unit 800**	**Unit 801 (Test System)**
Total Refrigerant Savings (lbs)	22.1	10.5	2.9	19.6
Annual Average Refrigerant Savings (lbs/yr)	7.4	3.5	1.0	6.5
Annual Average Cost Savings ($)	22	10.5	3	19.5
Conclusion:	Continuous monitoring with SGM can result in annual refrigerant savings of 1.0 to 7.4 lbs/yr, provided leaks are repaired immediately after the monitor alarms			

2.3. KMC SIGHT GLASS MONITOR COSTS

KMC has prepared installation and operating instructions for the SGM. The monitor and its controller will be installed by NCSU operators, with supervision and guidance provided by KMC engineers. The SGM is installed on the system sight glass. KMC engineers have determined the factory-specified sight glass locations are adequate for the SGM. They have, however, requested that the refrigerant line for horizontally oriented sight glasses be repositioned such that the sight glasses are vertical, with refrigerant flow from the bottom to the top of the sight glass. This will aid in clearing bubbles from the sight glass and optimize SGM performance. NCSU operators made the necessary modifications in the existing liquid lines to install new sight glasses and to change the line orientation as needed at the roof-top and chiller units. The factory-installed sight glass on the supermarket type unit is in brand new condition and is in a satisfactory location for the tests. The GHG Center personnel were on-site throughout the installation and shakedown process, and have documented any modifications made or difficulties encountered. The GHG Center will also document key decisions made regarding placement of other equipment and power supplies.

Capital cost and installation costs of the SGM will also be verified for each test system. Capital costs will be verified by obtaining cost data from KMC for the SGM and KMDigital Controller, and other equipment consumed during installation. Examples include additional sight glass, electrical wires, and other equipment. Installation costs will be verified by documenting the total labor hours expended for installing the monitor and its controller and re-locating the sight glass (if required). A cost summary table, similar to the example shown in Table 2-4, will be prepared.

Table 2-4. Example Illustrating Documentation of SGM Costs				
	Roof-Top Air Conditioning System	**Reciprocating Chiller**	**Supermarket Refrigeration System**	**Source of Data**
Capital Equipment Costs:				
Sight Glass Monitor	TBD	TBD	TBD	KMC
KMDigital Controller	TBD	TBD	TBD	KMC
Cost of new sight glass and related material (if required)	TBD	TBD	TBD	KMC / NCSU
Miscellaneous electrical wiring, power source	TBD	TBD	TBD	NCSU
Installation Costs[1]:				
Labor hours – SGM	TBD	TBD	TBD	NCSU
Labor hours – KMDigital Controller	TBD	TBD	TBD	NCSU
Labor hours – Add new sight glass	TBD	TBD	TBD	NCSU
[1] Industry average labor rate of $40 / hr will be used				

3.0 DATA QUALITY

3.1. DETERMINATION OF DATA QUALITY OBJECTIVES AND DATA QUALITY INDICATORS

In verifications conducted by the GHG Center and EPA-ORD, measurement methodologies and instrumentation are selected to ensure that desired level of data quality occurs in the final results. Data quality objectives (DQOs) are stated for key verification parameters before testing commences. These objectives must be achieved in order to draw conclusions from the measurements with the desired level of confidence. The process of establishing DQOs starts with determining the desired level of confidence in the verification parameters. The next step is to identify all measured values which affect the verification parameters, and determine the levels of error which can be tolerated. This section discusses derivation of the DQOs for critical verification parameters, followed by a discussion of the Data Quality Indicators (DQIs) that will be used to determine if the DQOs were met.

3.1.1. Leak Detection Sensitivity

Leak detection sensitivity is the ratio of the "cumulative refrigerant withdrawn at the point of alarm" divided by the "full charge of the system" times 100. The testing approach specifies repeated measurements to develop a mean leak detection sensitivity for each of the three test units being evaluated. Individual measurements will vary about that mean according to the standard deviation of the individual measurements.

Leak detection sensitivity will be measured by weighing incremental refrigeration losses and total unit charges and, as such, errors in the measurement of weight will significantly impact the quality of the data used to determine this verification parameter. The discussion in Section 2.1 illustrates the chain of calculations performed to assess the effects of scale accuracy on leak detection sensitivity determinations. They show that, for the larger units, if these errors occur for a 1.00 percent leak detection sensitivity, the calculated and reported value could be 0.980 percent [100*(0.686/70.032)]. This is 0.02 percent lower than the true value of 1.00 percent, and represents a 2.00 percent error in the determination of leak detection sensitivity.

For the smaller supermarket type unit, the leak detection sensitivity calculated and reported would be 0.911 percent [100*(0.146/16.021)], which is 0.089 lower than the true value of 1.00 percent. This represents about a 10 percent error in the determination of leak detection sensitivity.

Considering the calculations above, two different DQOs are selected for leak detection sensitivity based on the test unit size. The DQOs are specified as a percent of the measured leak detection sensitivity: ± 2 percent for the small unit and ± 10 percent for two large units.

Number of Tests Per Refrigeration Unit:

As discussed in Section 2.1, individual test results will fall within a range of values (confidence interval) around the mean of all test results. The GHG Center must strike a balance between determining a reasonable confidence interval and conducting a verification test that all can afford.

Based on the GHG Center's extensive experience in testing industrial equipment under actual field conditions, it is reasonable to expect 90 percent of the observed test results to fall within 0.30 times the mean; for example, if the mean leak detection sensitivity is 1.00 percent, 90 percent of the test results

should be between 0.70 and 1.30 percent. This range, or confidence interval (defined as *e* in Section 2.1) will be used to determine the number of tests to conduct on each unit, and will also be used to define the completeness DQO for leak detection sensitivity. Test runs will be repeated until the value for *e* is less than 0.30 times the mean leak detection sensitivity. If this cannot be achieved, significant variability will be indicated, and the GHG Center will stop testing after 5 valid runs have been completed.

The following table summarizes the leak detection sensitivity and completeness DQOs.

Table 3-1. Data Quality Objectives	
Refrigeration Unit Description	**Error as Percent of Leak Detection Sensitivity (%)**
Roof-top A/C or Chiller	± 2
Supermarket Type	± 10
Data Completeness DQO	
Test runs must be repeated until 90 % of observed values are within 0.30 times the mean leak detection sensitivity **OR** a maximum of 5 valid test runs are executed	

It can be seen from the discussion in Section 2.1 how these DQOs are linked to assumptions of scale performance, and as described below, how actual measurements of scale accuracy collected in the field will be used to determine how close the GHG Center came to accomplishing the original DQO. Measurements of scale precision will provide additional information on the quality of the final results.

To maintain data quality, and to help determine if the GHG Center has achieved the DQOs specified above, DQIs have been established and the GHG Center will measure scale accuracy and precision in the field. The scale will be newly purchased for this verification, and will be factory calibrated to NIST traceable standard weights prior to shipment. During the field test, the scale's performance will be routinely determined using the following NIST traceable standard masses: 5, 10, 15, 20, 25, 30, 50, 75, and 100 lbs. Prior to each test run, the test operator will challenge the scale with each weight and log the display reading on field data log forms. If the deviation of the display readings is within specifications for each of the test weights (i.e., within 0.02 percent of the standard mass, and ± 0.005 lb display error), the scale accuracy will be deemed satisfactory and testing for that run will proceed. If not, the scale will be repaired or replaced.

Precision will be verified in the field, at the end of each test run, by performing replicate weighings using four NIST traceable standard calibration weights. For example, if extractions from the small supermarket type unit are being weighed, the four weights will be selected based on weights encountered during the test run, and since testing on the small unit should produce weights ranging from 10 to 15 lbs, 5, 10, 15, and 20 lb test weights would be used. Each of these four weighings, repeated twice at the end of each test run, must produce values that are within 0.02 lb of the NIST weight or the scale will be repaired or replaced, and the test run repeated.

Quantification of these DQIs during the testing program will allow the GHG Center to monitor the actual quality of the measurements data collected, and will be used to report how close the GHG Center came to achieving the original DQO.

Table 3-2 provides the scale's specifications and DQI goals. Table 3-3 lists calibrations and QC checks that will serve as a direct means of monitoring and quantifying testing and analysis errors, and

determining if the stated DQI goals are met. For example, if the scale fulfills the field verification with NIST traceable standard weights, this implies that the scale meets the accuracy specifications listed in Table 3-2 and its performance will be sufficient to meet the leak detection sensitivity DQO.

Table 3-2. Measurement Instrument Specifications and Data Quality Indicator Goals

Measurement Variable	Instrument Type / Manufacturer	Instrument Range	Instrument Specification		How verified / determined
Full charge and refrigerant withdrawal measurements	Digi Model DI-28, S-SL Bench	0 to 100 lbs	Accuracy	± 0.02 % of reading and ± 0.005 lb display error	Factory calibration
					Field verification
			Precision	± 0.02 lb	Replicate weighings

Achieving the DQI goals will require GHG Center personnel to follow the QA/QC procedures discussed in Section 2.0 and Appendices B and C. A summary of the QA/QC checklist is provided in Table 3-3, and will serve as the basis for determining if the DQI goals were met. Determination of accuracy, precision, and completeness calculations will be performed by the GHG Center Field Team Leader during testing. QA/QC checks for other instruments, which will be used to verify stable operation of the test system, are also included in this table. The GHG Center Field Team Leader will have the specific responsibility for quality assurance of the on-site field testing. The DQI goals will be determined to be met, provided the accuracy, precision, and completeness achieved are within the levels specified in Table 3-2. If the DQI goals are not met, the Field Team Leader will have the authority to halt testing until the measurement system is corrected and proved to meet the required DQI goals.

Table 3-3. Summary of QA/QC Checks				
Measurement Variable	**QA/QC Check**	**When Performed/Frequency**	**Expected or Allowable Result**	**Response to Check Failure or Out of Control Condition**
Scales	Instrument calibration by manufacturer	Prior to verification testing	Accuracy ± 0.02 % of reading and ± 0.005 lb	Identify cause of any problem and correct, or replace scale
	Precision Check (procedures in Appendix B-2)	End of each leak detection sensitivity test run	Repeated weighings ± 0.02 lb	Identify cause of any problem and correct, or replace scale
	Field verification with standard weights (procedures in Appendix B-2)	Beginning of each leak detection sensitivity test run	Accuracy ± 0.02 % of reading and ± 0.005 lb	Perform manufacturer recommended span checks, identify cause of any problem and correct
Gauge Manifold	Installation/Operation (procedures in Appendix C-1)	Beginning of test on each system	System should be leak tight and purged of air	Fix leak, use another gauge manifold
		During testing	Hose and other accessories connected to the cylinders must be in identical position during each weighing such that scale readings are stable	Repeat test run
Ambient Temperature and Relative Humidity	Mfg. instrument calibration	Within 12 months prior to verification testing	Temp: ± 0.2 ^{o}F; RH ± 3%	Identify problem causes; Repair/replace sensors or dataloggers as required
	One-Point temperature check	Once per test day	± 2 ^{o}F when compared with colocated thermocouple	
	Relative Humidity comparisons	Twice per test day	± 15 % RH when compared with RDU data	
Refrigerant Line Temperature Sensors	Mfg. Instrument calibration	Prior to verification testing	Temp ± 0.2 ^{o}F	Identify cause of any problem and correct, or replace sensor

The scale will be factory calibrated prior to testing. The GHG Center will review the calibration certificates and NIST traceability records to ensure the accuracy and precision goals defined in Table 3-2 were achieved. In addition, manufacturer-specified installation and setup procedures and QC checks will be followed in the field. An operator's manual will be made available to all personnel during testing.

3.1.2. Potential Refrigerant and Cost Savings

Potential refrigerant savings estimates are based on measured leak detection sensitivity and annual refrigerant loss. Cost savings is simply the national average cost for one pound of refrigerant multiplied by pounds of refrigerant saved. The data quality of leak detection sensitivity will be well characterized, as discussed above, and will be a function of the performance of weight measurements. The national average cost factor for refrigerants used in the test units will be obtained from published data, and will be assumed to be accurate. However, the historical data used to estimate annual refrigerant loss for the test systems will be unknown quality. As discussed in Section 2.3, several factors contribute to uncertainties associated in the historical data including inaccurate measure of refrigerant added, not achieving full charge after servicing equipment, leaks in system or gauge manifold, and data entry errors. As a result, it will not be possible to establish accuracy and precision goals for refrigerant savings estimate.

One method of improving data quality of refrigerant and cost savings estimate is to examine historical records for multiple units, preferably by multiple operators. The GHG Center has made several attempts to obtain historical records from several operators, who maintain records of multi-year refrigeration charging activities for systems that are of the same size and type as the test units. Unfortunately, many operators were reluctant to share such data. One group offered to share their operational data however, their records were not organized in a readily useable form. This prevented the GHG Center from cost-effectively identifying and gathering historical data on systems similar to the test units. As discussed earlier, the host site maintains multi-year maintenance and repair records for the test units. Refrigerant and cost savings will be computed for these units. The site has also offered to locate other similar equipment whose data are stored in electronic databases. As a result, it is expected historical data for a minimum of three separate refrigeration and air conditioning units will be obtained and analyzed, and will enable broad characterization of refrigerant fill records. The GHG Center will review the historical data, and identify potential outliers or invalid data. The Verification Report will identify all valid data used in forming conclusions on refrigerant savings.

3.2. INSTRUMENT TESTING, INSPECTION, AND MAINTENANCE REQUIREMENTS

The equipment used to collect verification data will be subject to the pre-and post-test QC checks discussed earlier. Before the equipment leaves the GHG Center or NCSU, each piece of equipment will be assembled exactly as anticipated to be used in the field and fully tested for functionality. For example, all gauges, hoses, data logger, instruments, and other sub-components of the entire measurement system will be operated and calibrated as discussed earlier. Any faulty sub-components will be repaired or replaced before being transported to the test unit. A small amount of consumables and frequently needed spare parts will be maintained. Major sub-component failures will be handled on a case-by-case basis (e.g., renting replacement equipment, buying replacement parts).

4.0 DATA ACQUISITION, VALIDATION, AND REPORTING

4.1. DATA ACQUISITION, REVIEW, VALIDATION, AND VERIFICATION

During field testing, the Field Team Leader will maintain written records of all verification test results and QA/QC activities in log forms provided in Appendices B-1 through B-4. He will log the refrigerant leak screening, scale field calibration checks, scale precision checks, full charge determination, and leak detection sensitivity on the appropriate field data forms. He will also operate the temperature/humidity instrument and observe NCSU's refrigerant withdrawals and rechargings. After the completion of the control test, he will transfer all field data log forms, data disks, and field notes to the Project Manager. The Project Manager will interact with the Field Team Leader to ensure that DQI goals are met, and that the appropriate actions are taken if QA results are not consistent with stated goals.

The manually recorded information will be maintained in labeled three-ring binders at the GHG Center's facility per guidelines described in the GHG Center's QMP. In addition, all data disks, instrument calibration and/or certification records associated with the ambient temperature and RH instruments, documentation for the scale and its NIST traceable test weights, the refrigerant withdrawal system manual, and other test equipment documentation will be maintained at the GHG Center facility as described in the QMP under the oversight of the Project Manager.

The Project Manager holds overall responsibility for review, validation, and verification.

Data review and validation will primarily occur at the following stages:

- On-site following each test run – by the GHG Center Field Team Leader
- On-site following completion of testing – by the GHG Center Field Team Leader
- Before writing the draft Verification Report – by the GHG Center Project Manager
- During QA review of the draft Verification Report and audit of the data – by the SRI QA Manager

Upon review, all data collected will be classified as either valid, suspect, or invalid. The criteria used to review and validate the data will be QA/QC criteria discussed in Sections 2.0 and 3.0 and specified in Table 3-2. In general, valid results are based on measurements meeting DQOs, and that were collected when an instrument was verified as being properly calibrated.

Often anomalous data are identified in the process of data review. All outlying or unusual values will be investigated in the field as they are discovered. Anomalous data may be considered suspect if no specific operational cause to invalidate the data is found. All data, valid, invalid, and suspect, will be included in the Verification Report. However, report conclusions will be based on valid data only. The reasons for excluding any data will be justified in the report. Suspect data may be included in the analyses, but may be given special treatment as specifically indicated. If the DQI goals or DQOs cannot be met due to excessive variability in leak detection sensitivity, the data will be presented to the Project Manager. Based on this, a decision will be made to either continue the test, collect additional data, or terminate the test and report the data obtained.

GHG Center personnel will perform the appropriate data reductions and calculations, based on the equations discussed in Section 2.0. Results of calculations will be presented in the Verification Report in table, chart, or text format as is suited to the data type.

Those individuals responsible for on-site data review and validation are noted above. The SRI QA Manager reviews and validates the data and the draft Verification Report using the Test Plan and test methods. The data review and data audit will be conducted in accordance with the GHG Center's QMP. The procedures that will be followed are summarized in Section 4.3.

4.2. RECONCILIATION WITH DATA QUALITY OBJECTIVES

The DQOs for leak detection sensitivity determination were defined in Section 3.1. The reconciliation of the results with the DQO will be evaluated using the DQI process. When the primary data is collected, the data will be reviewed to ensure they are valid and are consistent with what was expected. In addition, the data will be reviewed to identify patterns, relationships, and potential anomalies. The quality of the data will be assessed in terms of accuracy, precision, and completeness as they relate to the stated DQI goals. If test data show that DQI goals were met, then we can conclude that DQOs were achieved because of, for example, the direct link between the scale accuracy and the leak detection sensitivity DQO described in Section 3.0. It will be reasonably easy to show achievement of the DQIs during field testing because verifications, QC checks, and calibrations will be performed on-site.

The Field Team Leader must evaluate attainment of the DQI goals by analyzing the test data as described in Sections 2.1 and 3.1 during field testing. This will allow him to decide when to conclude testing and if data quality issues are occurring that require action prior to the completion of testing. Following the field test, the final statistical analysis and evaluation of the tests' standard deviations and confidence intervals will be done by the Project Manager as a part of the data analysis and reporting phase of the verification.

Achievement of the leak detection sensitivity DQO requires that the scale meet the accuracy specified in Table 2-2. The GHG Center expects the scale's accuracy to conform to this specification; this will be verified in the field by a nine-point challenge of the scale with NIST traceable test weights prior to the first test run at each unit. It should be noted that, with the data planned for collection, the GHG Center has the option of using the nine-point check as a run-specific field calibration for correcting weights measured by the scale. In this case, a calibration curve would be constructed by developing a linear regression of the scale's display reading compared to the test weights' actual masses (as noted on the weight's NIST traceable calibration certificate). This regression could be performed over the full range of weights tested or, over more narrow ranges if more weight-specific scale performance data is desired. For example, a curve between 0 and 20 lbs could be developed if scale accuracy is non-linear between 10 and 100 lbs. The GHG Center would require the curve's R^2 value be greater than or equal to 0.990 or it would not be used. The regression equation may be used to determine actual error achieved in the leak detection sensitivity measurements.

This DQO also requires that the scale's precision conform to the specifications in Table 2-2. Because of this parameter's importance to this DQO, if the scale does not achieve the required ± 0.02 lb repeatability at any point, it will be repaired or replaced.

Achievement of the completeness DQO requires calculation of the standard deviation and the 90 percent confidence interval about the mean leak detection sensitivity after a series of test runs. If the confidence interval is less than or equal to 0.30 times the mean, the Field Team Leader may choose to terminate testing at that unit. If the standard deviation is too large and the resulting confidence interval is greater than this value, additional test runs will be conducted up to a maximum of five test runs.

If a DQI is not met, and if re-analysis, retesting, or reconciliation is not possible or convincing, then the Project Manager will report the best available data as gathered with the notation that the applicable DQO was not achieved. Results from verification testing will be presented in a Verification Statement and

Verification Report as described in Section 4.4.4. All data and analyses performed will be transparent in the final Report and Statement. In addition, potential limitations in the use of the data will be discussed, and corrective actions taken in the field and their impact on data quality will be discussed.

4.3. ASSESSMENTS AND RESPONSE ACTIONS

The quality of the project and associated data are assessed within the project by the Field Team Leader, Project Manager, SRI QA Manager, GHG Center Director, and technical peer-reviewers. Briefly, the Project Manager reviews the Field Team Leader's assessments and responses; the QA Manager reviews the Project Manager's and Field Team Leader's work, and the GHG Center Director maintains an oversight role for all activities. Assessment and oversight of the quality for the project activities are performed through the review of data, memos, audits, and reports by the Project Manager and independently by the SRI QA Manager.

The effectiveness of implementing the Test Plan are assessed through project reviews, in-phase inspections, audits, and data quality assessment.

4.3.1. Project reviews

The review of project data and the writing of project reports are the responsibility of the Project Manager, who is also responsible for conducting the first complete assessment of the project. Although the project's data are reviewed by the project personnel and assessed to determine that the data meet the measurement quality objectives, it is the Project Manager who must assure that the overall project activities meet the measurement and data quality objectives. The second review of the project is performed by the GHG Center Director, who is responsible for ensuring that the project's activities adhere to the requirements of the ETV program. The GHG Center Director's review of the project will also include an assessment of the overall project operations to ensure the Field Team Leader has the equipment, personnel, and resources to complete the project as required and to deliver data of known and defensible quality. The third review is that of the SRI QA Manager, who is responsible for assuring the program management systems are established and functioning as required by the QMP and corporate policy. The SRI QA Manager is the final reviewer within the SRI organization, and is responsible for assuring that contractual requirements have been met.

The draft Verification Report is then reviewed by KMC, followed by an independent review by NCSU and selected stakeholders (minimum of two industry experts). The external peer-reviews are conducted by technically competent persons who are familiar with the technical aspects of the project, but are not involved with the conduct of project activities. The peer-reviewers present the Project Manager with an an accurate and independent appraisal of the technical aspects of the project. Further details on project review requirements can be found in the GHG Center's QMP.

The draft Verification Report will then be submitted to EPA QA personnel, and all comments will be addressed by the Project Manager. Following this review, the Verification Report and Statement will undergo various EPA management reviews, including reviews by the EPA Project Officer, EPA-ORD Laboratory Director, and EPA Technical Editor.

4.3.2. Inspections

Inspections may be conducted by the Field Team Leader, Project Manager, or SRI QA Manager. Inspections assess activities that are considered important or critical to key activities of the project. These critical activities may include, but are not limited to, pre- and post-test calibrations, operation of the data

collection equipment, sample equipment preparation, sample analysis, or data reduction. Inspections are assessed with respect to the Test Plan or other established methods, and are documented in the field records. The results of the inspection are reported to the Project Manager and SRI QA Manager. Any deficiencies or problems found during the inspections must be investigated and the results and responses or corrective actions reported in a Corrective Action Report (CAR). This report is discussed in Section 4.4.3.

4.3.3. Audits

Independent systematic checks to determine the quality of the data will be performed on the activities of this project. These checks will consist of a Performance Evaluation Audit (PEA) and Audit of Data Quality (ADQ) as described below. In addition, internal quality control measurements will be used to assess the performance of the analytical methodology. The combination of these audits and the evaluation of the internal quality control data allow the assessment of the overall quality of the data for this project.

The SRI QA Manager is responsible for ensuring the audits are conducted as required by the Test Plan. Audit reports that describe problems and deviations from the procedures are prepared and distributed to the Project Manager and Field Team Leader. Any problems or deviations need to be corrected. The Field Team Leader is responsible for evaluating CARs, taking appropriate and timely corrective actions, and informing the Project Manager and SRI QA Manager of the action taken. The SRI QA Manager is then responsible for ensuring that the corrective action was taken. A summary report of the findings and corrective actions is prepared and distributed to the Project Manager and GHG Center Director.

4.3.3.1. Audit of Data Quality

The ADQ, an important component of a total system audit, is a critical evaluation of the measurement, processing, and evaluation steps to determine if systematic errors have been introduced. The SRI QA Manager will review all data quality determinations made by the Project Manager as part of the independent ADQ and, at that time, the SRI QA Manager will select DQI/DQO determinations to independently verify using field notes, log forms, and other data. Although the SRI QA Manager is not in the field, the GHG Center believes that this strategy provides for reliable and cost effective data quality determinations, ensures independent review and confirmation of QA data occurs, and provides adequate means to assure real or perceived conflicts of interest do not occur The scope of the ADQ is to verify that the data-handling system is correct and to assess the quality of the data generated.

The ADQ, as part of the system audit, is not an evaluation of the reliability of the data presentation. The review of the data presentation is the responsibility of the Project Manager and the technical peer-reviewer.

4.4. DOCUMENTATION AND REPORTS

During the different activities on this project, documentation and reporting of information to management and project personnel are critical. The field test documentation will be submitted to the Project Manager. These documents, other original data, reports, notes, QC documentation, corrective action/assessment reports, and all other documents will be stored in the project records, as required by the GHG Center's QMP. To ensure the complete transfer of information to all parties involved in this project, the following field test documentation, QC documentation, corrective action/assessment reports, and Verification Report and Statement will be prepared.

4.4.1. Field Test Documentation

The Field Team Leader will record all field activities. The Field Team Leader reviews all data sheets and maintains them in an organized file. The required test information was described in Section 2.0. The Field Team Leader will also maintain a field notebook that documents the activities of the field team each day and any deviations from the schedule, Test Plan, or any other significant event. Any problems found during testing requiring corrective action will be reported immediately by the field test personnel to the Field Team Leader through a Corrective Action Report (CAR). The Field Team Leader will document this in the project files and report it to the Project Manager and SRI QA Manager.

Following each test run, the Project Manager will check the test results with the assistance of the Field Team Leader to determine whether the test run met the QA criteria. Following this review and confirmation that the appropriate data were collected and DQOs were satisfied, the GHG Center Director will be notified.

At the end of testing on each equipment, the Field Team Leader will collect all of the data from the field team members, which will include data sheets, data printouts, and field notebook. A copy of the field test documentation will be submitted to the Project Manager, and originals will be stored in the project records, as required by the GHG Center's QMP.

4.4.2. QC Documentation

After the completion of verification tests, test data, sampling logs, calibration records, certificates of calibration, and other relevant information will be stored in the project records, as required by the GHG Center's QMP. Calibration records will include information about the instrument being calibrated, raw calibration data, calibration equations, calibration dates, calibration standards used and their traceabilities, calibration equipment, and staff conducting the calibration. These records will be used to prepare the Data Quality section in the Verification Report, and will be made available to the SRI QA Manager during audits.

4.4.3. Corrective Action and Assessment Reports

A corrective action is the process that occurs when the result of an audit or quality control measurement is shown to be unsatisfactory, as defined by the data quality objectives or by the measurement objectives for each task. The corrective action process involves the Field Team Leader, Project Manager, and SRI QA Manager. A written CAR is required on all corrective actions (Figure 4-1).

Figure 4-1. Corrective Action Report

Corrective Action Report

Verification Title: _____

Verification Description: _____

Description of Problem: _____

_____

_____

_____

Originator: _____ **Date:** _____

Investigation and Results: _____

_____

_____

_____

Investigator: _____ **Date:** _____

Corrective Action Taken: _____

_____

_____

_____

Originator: _____ **Date:** _____

Approver: _____ **Date:** _____

Carbon copy: Project Manager, GHG Center Director, SRI QA Manager, EPA Project Officer

Since the tasks of this study involve a validations process to ensure data quality for the technology being verified, predetermined limits for the data acceptability have been established in the measurement and data quality objectives. Therefore, data determined to deviate from these objectives require evaluation through immediate corrective action process. Immediate corrective action responds quickly to improper procedures, indications of malfunctioning equipment, or suspicious data. The analyst, as a result of calibration checks and internal quality control sample analyses, will most frequently identify the need for such an action. The Field Team Leader will be notified of the problem immediately. The Field Team Leader will then notify the Project Manager, who will take and document appropriate action. The Project Manager is responsible for and is authorized to halt the work if it is determined that a serious problem exists.

The Field Team Leader is responsible for implementing corrective actions identified by the Project Manager, and is authorized to implement any procedures to prevent the recurrent of problems.

After technical assessments, the SRI QA Manager will submit the Assessment Report to the Project Manager and GHG Center Director. The Project Manager will then submit the Assessment Report to the EPA Project Officer and EPA QA Manager for information purposes.

The results of ADQs conducted by the SRI QA Manager will be routed to the Project Manager for review, comments, and corrective action. The results will be documented in the project records. The Project Manager will take any necessary corrective action needed and will respond via the CAR to the SRI QA Manager. Inspections conducted by the SRI QA Manager will be reported to the Project Manager in the same manner as other audits. The results of all assessments, audits, inspections, and corrective actions for the task will be summarized and used in the Data Quality section in the Verification Report.

4.4.4. Verification Report and Verification Statement

A draft Verification Report and Statement will be prepared within 6 weeks of completing the field test by the Project Manager. The Project Manager will submit the draft Verification Report and Statement to the SRI QA Manager and GHG Center Director for review. The final Verification Report will contain a Verification Statement, which is a 3 to 5 page summary of the SGM description, the test strategy used, and the verification results. The Verification Report will summarize the results for each verification parameter discussed in Section 2.0 and will contain sufficient raw data to support findings and allow others to assess data trends, completeness, and quality. Clear statements will be provided which characterize the performance of the verification parameters. A preliminary outline of the Verification Report is shown below.

Preliminary Verification Report Outline

Verification Statement

Section 1.0: *Verification Test Design and Description*
Description of the ETV Program
KMC Sight Glass Monitor System Description
Overview of the Verification Parameters and Evaluation Strategies

Section 2.0: *Results*
Refrigerant Leak Detection Sensitivity
Estimated Refrigerant Savings and Cost Savings
KMC Sight Glass Monitor Cost

Section 3.0: *Data Quality*

Section 4.0: *Additional Technical and Performance Data (optional) supplied by KMC*

Appendices: *Raw Verification and Other Data*

The Verification Report will then be submitted to KMC for review and, after modifications are made, will be submitted simultaneously to at least two representatives of the GHG Center's stakeholder groups and the EPA QA team. When the final draft Verification Report is prepared, officials from EPA-ORD and the GHG Center will sign the Verification Statement. The Verification Report and Verification Statement will be posted on the GHG Center and ETV Web sites, and copies will be distributed to the reviewers.

4.5. TRAINING, QUALIFICATIONS, HEALTH AND SAFETY

The GHG Center's Field Team Leader has extensive experience (>16 years) in field testing. The Project Manager has performed numerous field verifications under the ETV program, and is familiar with requirements mandated by the EPA and GHG Center QMPs. The SRI QA Manager is an independently appointed individual whose responsibility is to ensure the GHG Center's activities are performed according to the EPA and GHG Center's approved QMPs. The participants working on behalf of the GHG Center in support of this verification are selected by the GHG Center and evaluated by EPA. Evaluation criteria include relevant education, work experience, and experience in quality management. These qualifications are documented in project personnel resumes and files, as required by the GHG Center's QMP. Each field crew member will be thoroughly familiar with this Test Plan, the measurement equipment, procedures, and method for their assigned jobs.

The activities performed by GHG Center personnel will not require formal certifications by state, federal, or local authorities. However, special training is required from NSCU technicians that will be performing refrigerant evacuation and charging procedures. The NSCU technicians have the training and certifications required to perform the tasks outlined in this Test Plan.

All work conducted as a part of this verification test will conform to applicable OSHA safety standards. All contractors and subcontractors which may be used to perform such work must agree to meet or exceed these standards in their project work. All electrical installations and connections will be performed by a licensed electrician. All mechanical requirements will conform to applicable EPA and ARI standards.

5.0 REFERENCES

Moravek, Joseph, *Air Conditioning Systems, Principles, Equipment, and Service*, Air Conditioning and Refrigeration Institute, Prentice Hall, New Jersey, 2001.

Energy Information Administration, *Emissions of Greenhouse Gases in the United States 1996*, DOE/EIA-0573(96), U.S. Department of Energy, Energy Information Administration, Washington, DC, October 1997.

Energy Information Administration, *Emissions of Greenhouse Gases in the United States 1999*, www.eia.doe.gov/oiaf/1605/ggrpt/index.html, DOE/EIA-0573(99), U.S. Department of Energy, Energy Information Administration, Washington, DC, 1999.

Code of Federal Regulations, 40 CFR Part 82, *Protection of Stratospheric Ozone; Refrigerant Recycling*, Vol. 58 No. 92 Friday, May 14, 1993.

Johnson, Robert. *Seek The Leak*, Engineered Systems, February 2000.

Southern Research Institute. *Environmental Technology Verification Greenhouse Gas Technology Verification Quality Management Plan, Research Triangle Park*, NC, version 1.2, January 2001.

U.S. Department of Energy and U.S. Environmental Protection Agency. *Carbon Dioxide Emissions from the Generation of Electric Power in the United States*, www.eia.doe.gov/cneaf/electricity, July 2000.

APPENDIX A
Photos of Test Systems

Page
Appendix A-1. Roof-Top Air Conditioning System A-2
Appendix A-2. Reciprocating Chiller A-3
Appendix A-3. Supermarket Refrigeration System A-4

Appendix A-1. Roof-Top Air Conditioning System: Carrier, Model 50DKB074DAA600FM

4 air conditioning systems, each equipped with 2 compressors (30 hp)

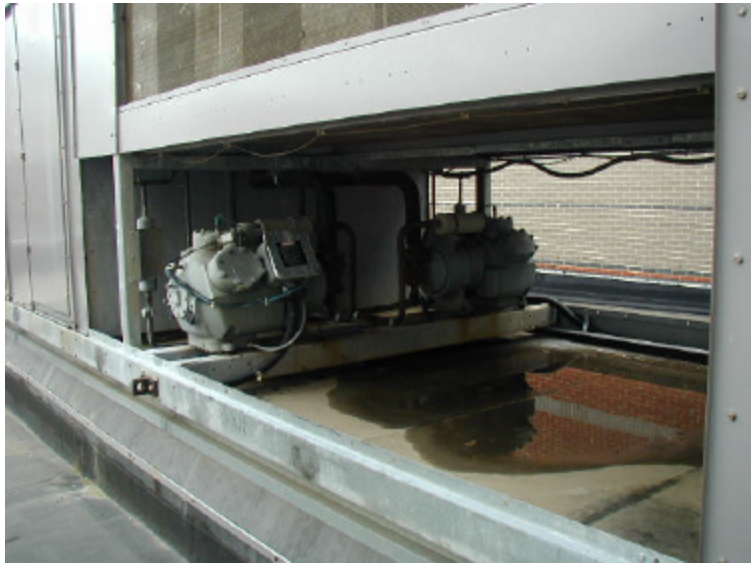

2 compressors operating in series (refrigerant charge of 73.5 and 64.5 lbs R-22)

Low-Pressure Access

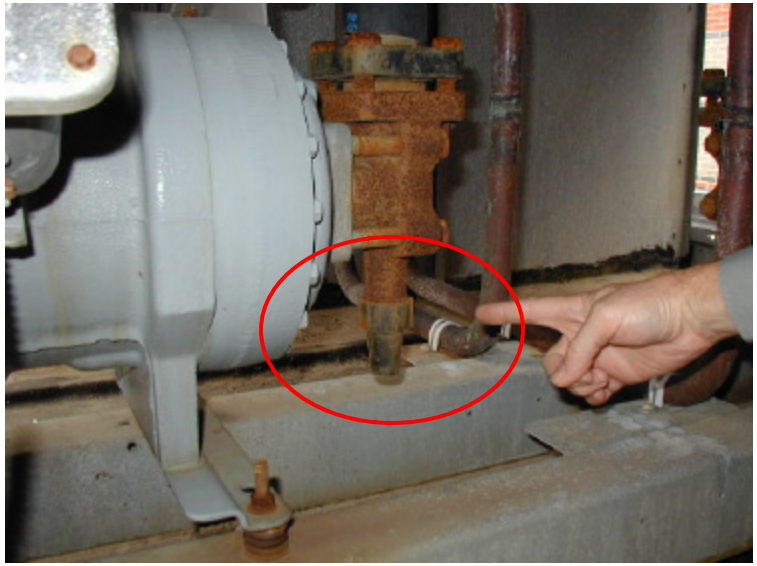

High-Pressure Access

Appendix A-2. Reciprocating Chiller: Carrier, Model 30GT-070-500ka

Water chiller, equipped with 2 compressors

2 compressors operating in series (refrigerant charge of 70 and 69 lbs R-22)

Low-Pressure Access

High-Pressure Access

Appendix A-3. Supermarket Refrigeration System: Larkin, Model OSH015OL5

1 1/2 hp single compressor, refrigerant charge of 15.11 lbs R-502

Compressor access panel

Close up of compressor

APPENDIX B
Field Log Forms

		Page
Appendix B-1.	Refrigerant Leak Screening	B-2
Appendix B-2.	Digital Scale Field Calibration Procedures and Record Forms	B-3
Appendix B-3.	Full Charge Determination	B-4
Appendix B-4.	Leak Detection Sensitivity Testing	B-5

Appendix B-1. Refrigerant Leak Screening Log Form
(Form KMC-1)

Date: _____ **Test Run No:** _____
Time: _____
Operator: _____

System Id:
- **Commercial Roof-Top Air Conditioning System** ☐
- **Reciprocating Chiller** ☐
- **Supermarket Refrigeration System** ☐

Components Screened	Measured Concentration (ppm)	Action Taken
Refrigerant circuit around condenser		
Refrigerant circuit around compressor		
Refrigerant circuit around evaporator		
Connections (joints, gaskets, flanges, valves)		
Gauge manifold system (gauge, hoses, connections)		
Other		

Appendix B-2. Scale Verification/Calibration Procedures and Log Form
(Form KMC-2)

Date: _____ **Test Run No:** _____
Time: _____
Operator: _____

System Id:
- **Commercial Roof-Top Air Conditioning System** ☐
- **Reciprocating Chiller** ☐
- **Supermarket Refrigeration System** ☐

Calibration Procedures
NOTE: Perform the full 9-point verification/calibration immediately before EACH test run. Perform the precision check/repeated scale readings immediately after the end of EACH test run at each unit.

1. Follow manufacturer's procedures for operating the scale.
2. Place the standard weight onto scale. Record scale reading.
3. Remove standard weight, and make sure the scale reading initializes to 0 lb.
4. Repeat steps 2 and 3 by measuring the weights of remaining standard weights. Perform weighings for each of the following values: 5, 10, 15, 20, 25, 30, 50, 75, and 100 lbs.
5. For precision check, at the end of each test run, repeat steps 2 and 3 two more times by measuring and recording weights at four different standard weights which bracket the weight at which the SGM alarms. (Example: SGM alarms at 10.7 lb; perform precision check with 5, 10, 15, and 20 lb test weights).

Standard Weight (lb)	**Scale Readings**	**Difference, (**lb**)**	**Allowable Difference [(standard weight) * .002] + .005 lb**	**Acceptable? (Y/N)**	**Precision Check; Repeated Scale Readings**		
	Prior to Each Test Run				End of Run Reading (lb)	Duplicate End of Run Reading (lb)	**Acceptable? (All readings ± 0.02 lb)**
5							
10							
15							
20							
25							
30							
50							
75							
100							

Appendix B-3. Full Charge Determination Log Form
(Form KMC-3)

Date: _____ **Test Run No:** _____
Operator: _____

System Id:

- **Commercial Roof-Top Air Conditioning System** ☐
- **Reciprocating Chiller** ☐
- **Supermarket Refrigeration System** ☐

Evacuating the System (at beginning of test)

Beginning Time _____ **Ambient Temperature** _____ **°F**
Ending Time _____ **Ambient Relative Humidity** _____ **%**

Initial System Pressures
High Side _____ psig
Low Side _____ psig

Final System Pressures
High Side _____ psig
Low Side _____ psig

(1)	**Initial Weight of Empty Cylinder**	_____ **lbs**
(2)	**Final Weight of Cylinder**	_____ **lbs**
(3)	**Weight of Refrigerant in Hoses**	_____ **lbs**
	total length of hoses	_____ **in.**
	diameter of hoses	_____ **in.**
	density of refrigerant	_____ **lb/ft^3**
(4)	**Total Refrigerant Evacuated**	_____ **lbs**
	(4) = (2) + (3) - (1)	

Charging the System (at beginning of test and in-between test runs)

System Pressure after Air/Moisture is Removed _____microns Hg
System Pressure after ~15 minute hold _____microns Hg
Acceptable ? (Y/N) _____

Run No.	**1**	**2**	**3**	**4**	**5**
Initial Charging Time Final Charging Time					
Final System Pressures High side (psig) Low side (psig)					
Amperage Draw (amps)					
Highest KMC Voltage Signal Detected (VDC) Duration of Voltage > 4.0 DC (mins)					
Ambient Temperature (°F) Ambient Relative Humidity (%)					
Scale Readings (1) Initial Weight of Cylinder (lbs) (2) Final Weight of Cylinder (lbs)					
Weight of Refrigerant in Hoses Hose volume - length x 3.14 x radius^2 (ft^3) Density of refrigerant (lb/ft3) (3) Refrigerant Remaining in Hoses (lbs)					
Refrigeration System Full Charge For Run 1 = (2) - (3) – (1) For all other runs = Run 1 + (2) - (3) - (1)					

Appendix B-3. Full Charge Determination (Procedures)

Initial System Evacuation Procedures (Beginning of Test)

1. Screen for leaks using hand held leak detector. Record highest concentration measured in Log Form KMC-1. Fix any leaks found and record actions taken.
2. Calibrate scale according to procedures outlined in Appendix B-2. Compute and record instrument accuracy and precision. Verify that data quality indicator goals (listed in Table 3-2) are satisfied.
3. Attach gauge manifold system and recovery unit per instructions provided in Appendix C-1 and the recovery unit's operating manual. Measure and record initial system operating pressures in Log Form KMC-3. Measure initial weight of cylinder in which refrigerant will be recovered. Record scale reading in Log Form KMC-3.
4. Leak check the hoses, valves, and connections. Record highest concentration found and fix any leak found in Log Form KMC-1
5. Configure the valve positions as shown Figure 2-5. Follow recovery unit operating instructions and begin evacuating the system.
6. Once the system evacuation is completed and scale readings remain relatively constant (± 0.02 lbs), close the high and low-pressure valves. Record final pressure gauge readings and final weight of the cylinder in Log Form KMC-3.
7. Compute total refrigerant evacuated and record in Log Form KMC-3.

Procedures for Charging the System (Beginning of Test and In-Between Test Runs)

1. Attach vacuum pump to the gauge manifold. Remove air and moisture from the refrigeration system per instructions provided in Appendix C-2. Record system pressure in Log Form KMC-3.
2. Attach gauge manifold and configure valve positions as shown in Figure 2-6.
3. Measure initial weight of refrigerant cylinder and the heating blanket (if needed). Record in Log Form KMC-3.
4. Begin adding refrigerant, bring on all compressor unloaders to full load condition. Measure compressor current as described in Appendix C-6. Record amp readings in log form provided in Appendix B-3. Measure system pressures. Suction pressure should be within ± 2 psig and discharge pressure should be within ± 5 psig of the levels listed in Table 1-2. Continue to add refrigerant in incremental amounts until the flash level condition of 4.0 V.D.C. prevails for no more than 15 seconds in any 5-minute period. According to the refrigeration system manufacturers, the sight glass must be clear to be considered fully charged.
5. Measure final weight of refrigerant cylinder. Compute cumulative charge added to the system and full charge of the system. Record in Log Form KMC-3.

NOTE:: The manifold and its valves will be operated such that at the end of the charging process the high-pressure hose is purged to the low-pressure (suction) side of the system. This will ensure that only refrigerant vapor at suction pressure is in the manifold's high- and low-pressure hoses. After each refrigerant withdrawal, the operator will perform the same procedure, again ensuring that only refrigerant vapor at suction pressure is in the manifold's hoses. Because the suction pressure will remain at approximately the same value throughout this process, the density and weight of the refrigerant in the high-pressure and low-pressure hoses will remain approximately the same throughout the test. This means that the weight of the refrigerant in these two hoses can be neglected. The weight of the refrigerant in the charging hose (connected to the tank on the scale) is a function of the pressure in the tank, once it is isolated from the unit during the test. Again, the operator will control the manifold valves such that only vapor (no liquid) is in the hose during weighings. The weight of the refrigerant in this hose will be computed based on the internal volume of the hose and refrigerant specific volume/pressure data supplied by Honeywell/Genetron, Inc.

Appendix B-4. Leak Detection Sensitivity Testing Log Form
(FORM KMC-4)

Date: _____ **Test Run No:** _____
Operator: _____

(1) Refrigeration System Full Charge (Form KMC-3) _____ **lbs**
Target Amount to Withdraw (0.02 x Full charge) _____ **lbs**

(2) Initial Weight of Test Cylinder _____ **lbs**

Withdrawal No.	Time	Scale Reading (lbs) (3)	Cumulative Refrigerant Withdrawn (lbs) (4) = (3) – (2)	SGM Alarmed Y/N	Pressure Gauge Readings (psig)		Current Draw (amps)	Ambient Temperature (F)	Relative Humidity (%)
					High	Low			
1									
2									
3									
4									
5									
7									
8									
9									
10									
11									
12									
13									
14									
15									
16									
17									
18									
19									

Leak Detection Sensitivity (4)/(1) * 100 _____ **%**

Appendix B-4. Leak Detection Sensitivity Testing (Procedures)

Refrigerant Withdrawal Procedures

1. Calibrate scale according to procedures outlined in Appendix B-2. Compute and record instrument accuracy. Verify that data quality indicator goals (listed in Table 3-2) are satisfied.
2. Turn compressor off. Attach gauge manifold to the 30 lb test cylinder. Measure initial weight of test cylinder in which refrigerant will be withdrawn. Record scale reading in log form provided in Log Form KMC-4.
3. Close both high-pressure and low-pressure gauge readings. Turn compressor on.
4. Record system pressures, current draw, and outdoor temperature/humidity in Log Form KMC-4.
5. Compute target amount to withdraw by multiplying weight of measured full charge by 0.02. Record in Log Form KMC-4.
6. Slightly open high-pressure gauge valve and begin to withdraw refrigerant into test canister. Close the high-pressure gauge valve when the scale reading has increased by the target amount.
7. Measure weight of test cylinder and refrigerant. Record in Log Form KMC-4.
8. Allow 5 minutes for the system to stabilize. For at least one of the repeat test runs, increase the wait time to 30 minutes after more than half of the charge level at which the previous run's alarm occurred has been removed. Determine if the SGM has alarmed (i.e., buzzer sound is heard following voltage reading of greater than 4.0 for more than 1 minute). Calculate cumulative refrigerant withdrawn. Compute leak detection sensitivity and standard deviation of all test runs. Determine if the test run must be repeated to meet the $\pm$ 0.30 percent confidence interval criteria.
9. If yes, follow procedures outlined in Appendix B-2 to compute scale precision for the range of weights encountered during above testing. Recharge the system using procedures outlined in Appendix B-3. Repeat test run.
10. If the SGM does not alarm, repeat Steps 6 though 9.

APPENDIX C
Test Equipment Operating Procedures

	Page
Appendix C-1. Gauge Manifold	C-2
Appendix C-2. Refrigerant Vacuum Pump	C-5
Appendix C-3. Ammeter	C-6
Appendix C-4. Meteorological Sensors	C-6

Appendix C-1. Gauge Manifold

The gauge manifold will be operated as follows:

- Never drop or abuse the gauge manifold.
- Keep ports or charging lines capped when not in use.
- Never use any fluid other than clean oil and refrigerant.
- Zero the gauge before each use.
- Leak test by screening for leaks around the O-rings at the end of the hoses.
- During weight measurements, gauge manifold and hoses must be secured and kept in the same position throughout testing.

Per ARI guidelines, the gauge manifold will be verified as follows:

1. Install gauges on a new refrigerant cylinder.
2. Convert the pressure to temperature using PT chart.
3. Measure tank temperature.
4. The two temperatures should match ($\pm$ 5 ^{o}F).
5. If temperatures are different, remove the cover from the gauges and adjust the dial to measured temperature.
6. Zero the gauges before each use.

To connect the manifold to the system, the following procedures will be followed to purge contaminants from the hoses:

1. Check to be sure that both service valves are open, then remove the valve stem caps from the equipment service valves.
2. Remove hoses from hose rack.
3. Connect the center hose from the gauge manifold to recovery unit, vacuum pump, or refrigerant cylinder.
4. Open valves on the gauge manifold.
5. Attach hoses loosely on access service valves. Open the valve on the refrigerant cylinder for about 2 seconds, and then close it. This will purge any air from the gauge manifold and hoses.
6. Quickly tighten the gauge manifold hoses to the gauge ports – the low-pressure compound gauge to the suction service valve and the high-pressure gauge to the liquid line service valve.
7. Close both valves on the gauge manifold. Crack (turn clockwise) both equipment service valves one turn. The system is now allowed to register pressure readings on each gauge.
8. Other tasks such as charging and evacuation can be performed now that gauge manifold and hoses are purged and connected to the system.

To remove the gauge manifold from the system, the following procedures will be followed:

1. Open (counter clockwise) both the liquid and suction service valves on the compressor.
2. Remove hoses from gauge ports and seal ends of hoses with ¼ in. flare plugs to prevent hoses from being contaminated.
3. Leak check access valves.
4. Replace all gauge-port and valve-stem caps, ensuring that all caps contain O-rings provided with them and are tight.

Appendix C-2. Refrigerant Vacuum Pump

The following procedures will be followed to ensure complete purge of air and moisture content prior to charging the refrigeration system.

1. Install the gauge manifold as described in Appendix C-1
2. Connect the center hose to the vacuum manifold assembly.
3. Open the valves to the pump and indicator. Close the refrigerant valve. Follow the pump manufacturer's instructions for pump operation.
4. Open (wide) both valves on the gauge manifold and mid-seat both high and low-pressure service valves
5. Start the vacuum pump and evacuate the system until a vacuum of at least 50 microns Hg is achieved
6. Close the pump valve and isolate the system.
7. Stop the pump for 30 minutes and observe the vacuum indicator to see if the system holds the vacuum pressure. If not, check all connections for tight fit and repeat purging procedure until the system does hold the desired pressure setting.
8. Close off the manifold gauge set.
9. Disconnect the hose to the vacuum pump.
10. Turn off the power to the vacuum pump.
11. The system will remain under vacuum, such that refrigerant can naturally flow into the system during charging activities.

Appendix C-3. Ammeter

Current Draw Measurements

The following procedures will be performed to verify proper current draws prior to each test run.

1. Measure the current of each of the three wires going into the terminals on a single-phase compressor.
2. Record these current readings in Log Form KMC-3.

The highest of three readings will be the RLA or FLA of the compressor as listed in Table 1-2. It should not exceed the nameplate rating.

Appendix C-4. Meteorological Sensors

Installation and Setup Checks:

Field installation procedures are detailed in the documentation provided for the integrated temperature/humidity unit by Vaisala will not be discussed here. GHG Center testing personnel will follow all required procedures to ensure that checks for appropriate installation locations, length of cable, process connections, field wiring and ground wiring are conducted properly, including:

- All wires will not be located near motors, power supply cables, or other such electrically noisy equipment.

- No hand-held radios will be used near the instruments.

In each of these sensors, the parameter monitored creates a small electrical change in capacitance or resistance which corresponds to the variation in the monitored parameter. This change is measured, amplified and converted by the electronics package associated with each sensor. Unless catastrophic damage (which should be visible) has occurred to the sensors, their accuracy at setup should correspond precisely to the initial factory calibration performed before shipping. Visual checks for damage both before and after installation will be performed, and appropriateness checks of the outputs will be performed at startup.

The signal inputs into the A/D module in the data acquisition computer are scaled and converted into the proper units and logged on the computer hard drive by a program provided by the A/D module manufacturer. The GHG Center testing personnel will maintain field logs of all data entered into this program. An electronic copy of the configuration file will be maintained. Detailed guidelines are provided in the software Programming Manual.

Sensor Function Checks:

Reasonableness checks will be performed by examining the ambient temperature and relative humidity recorded by the test instruments with those reported by the National Weather Station at the Raleigh Durham International Airport. All suspect data will be flagged, and the measurement instruments will be examined for damage or failure.