SRI/USEPA-GHG-VR-04
September 1999

Environmental Technology Verification Report

C. Lee Cook Division, Dover Corporation
Static Pac™ System

Phase I Report

Prepared by:

Southern Research Institute

Under a Cooperative Agreement With
U.S. Environmental Protection Agency

EPA REVIEW NOTICE

This report has been peer and administratively reviewed by the U.S. Environmental Protection Agency, and approved for publication. Mention of trade names or commercial products does not constitute endorsement or recommendation for use.

SRI/USEPA-GHG-VR-04
September 1999

Greenhouse Gas Technology Verification Center

A U.S. EPA Sponsored Environmental Technology Verification Organization

C. Lee Cook Division, Dover Corporation
Static Pac™ System

Phase I
Technology Verification Report

Prepared By:
Southern Research Institute
Greenhouse Gas Technology Verification Center
PO Box 13825
Research Triangle Park, NC 27709 USA

Under EPA Cooperative Agreement CR 826311-01-0

U.S. Environmental Protection Agency
Office of Research and Development
National Risk Management Research Laboratory
Air Pollution Prevention and Control Division
Research Triangle Park, NC 27711 USA

EPA Project Officer: David A. Kirchgessner

TABLE OF CONTENTS

Page

ACKNOWLEDGMENTS iv

1.0 INTRODUCTION 1-1
1.1 BACKGROUND 1-1
1.2 THE STATIC PAC™ TECHNOLOGY 1-2
VERIFICATION GOALS 1-6

2.0 TECHNICAL BACKGROUND AND VERIFICATION APPROACH 2-1
2.1 METHANE EMISSIONS FROM NATURAL GAS COMPRESSORS 2-1
2.2 DESCRIPTION OF THE TEST SITE AND STATIC PAC™ INSTALLATION 2-2
2.3 VERIFICATION APPROACH 2-3
2.3.1 Establishing Baseline Conditions 2-3
2.3.1.1 Case 1 2-4
2.3.1.2 Case 2 2-5
2.3.1.3 Impact on Normal Running Emissions 2-7
2.3.2 Emission Measurements and Calculations 2-8
2.3.2.1 Rod Leak Rate Measurements 2-8
2.3.2.2 Component Leak Rate Measurements 2-11
2.3.2.3 Natural Gas Composition Measurements 2-12
2.3.2.4 Blowdown Volume Determination 2-12
2.3.3 Site Operational Data 2-12

3.0 RESULTS 3-1
3.1 ROD PACKING EMISSIONS 3-1
3.1.1 Emissions During Idle/Shutdown 3-1
3.1.2 Emissions During Compressor Operation 3-2
3.2 OTHER EMISSION SOURCES 3-3
3.2.1 Valve Leaks and Blowdown Volume 3-3
3.2.2 Miscellaneous Fugitive Sources 3-4
3.3 NET GAS SAVINGS 3-5
3.3.1 Compressor Operational Characteristics 3-5
3.3.2 Case 1 and Case 2 Gas Savings 3-7
3.3.3 Estimated Gas Savings For Other Compressor Rods 3-8
3.4 INSTALLATION REQUIREMENTS 3-11

4.0 DATA QUALITY 4-1
4.1 BACKGROUND 4-1
4.2 ROD PACKING EMISSION RATE MEASUREMENTS 4-1
4.2.1 Unit Valve, Blowdown Valve, and Pressure Relief Valve 4-4
4.2.2 Gas Composition 4-6
4.2.3 Blowdown Volume 4-6
4.3 OVERALL UNCERTAINTY IN THE MEASUREMENTS, NET GAS SAVINGS, AND METHANE EMISSIONS VALUES 4-6

5.0 REFERENCES 5-1

APPENDICES

		Page
APPENDIX A	Static Pac™ Operator's Manual – Automatic Control System	A-1

LIST OF FIGURES

		Page
Figure 1-1	Schematic of a Gas Compressor Engine and Rod Packing	1-3
Figure 1-2	Rod Packing – Ring Detail	1-4
Figure 1-3	Rod Packing Cutaway with Static Pac™	1-5
Figure 1-4	Static Pac™ Actuation and Deactuation Process	1-6
Figure 2-1	Simplified Floor Plan of the Test Site	2-3
Figure 2-2	Compressor/Engine Configuration and Emissions Sources	2-6
Figure 2-3	Flow Tube Calibration at Low Flows (6/2/99)	2-10
Figure 3-1	Idle-mode Emissions	3-2
Figure 3-2	Operating Emissions	3-4
Figure 4-1	Flow Tube Repeatability (6/2/99)	4-3
Figure 4-2	Flow Tube Calibration at High Flows (8/12/99)	4-5

LIST OF TABLES

		Page
Table 2-1	Common Shutdown Scenarios and Emissions	2-5
Table 3-1	Rod Seal Emissions of Natural Gas (Unit Idle & Pressurized)	3-1
Table 3-2	Rod Seal Emissions of Natural Gas (Unit Operating)	3-3
Table 3-3	Component Emissions	3-5
Table 3-4	Engine Operating Schedule for Phase I	3-6
Table 3-5	Overall Average Emission Factors	3-8
Table 3-6	Case 1 and Case 2 Gas Savings (scf Natural Gas)	3-9
Table 3-7	Static Pac™ Capital and Installation Costs	3-11
Table 4-1	Flow Tube Calibration Results (Low Flows)	4-2
Table 4-2	Flow Tube Calibration Results (High Flows)	4-4
Table 4-3	Rotameter Calibration Results	4-5
Table 4-4	Summary of Instrument Performance Data	4-6

ACKNOWLEDGMENTS

The Greenhouse Gas Technology Verification Center wishes to thank the staff and employees of ANR Pipeline Company for their invaluable service in hosting this test. They provided the compressor station to test this technology, and gave technical support during the installation and shakedown of the technology. Some key individuals who should be recognized include Curtis Pedersen, Dwight Chutz, Marilyn Wenzel, and Ron Sander. Thanks are also extended to Gary Swan of CMS Panhandle Eastern Pipeline Company, and to the Center's Oil and Natural Gas Industry Stakeholder Group for reviewing this report.

1.0 INTRODUCTION

1.1 BACKGROUND

The U.S. Environmental Protection Agency's Office of Research and Development (EPA-ORD) has created a program to facilitate the deployment of innovative technologies through performance verification and information dissemination. The goal of the Environmental Technology Verification (ETV) program is to further environmental protection by substantially accelerating the acceptance and use of improved and more cost-effective technologies. The ETV program is funded by the Congress in response to the belief that there are many viable environmental technologies which are not being used for the lack of credible third-party performance testing. With performance data developed under this program, technology buyers, financiers, and permitters in the United States and abroad will be better equipped to make informed decisions regarding environmental technology acquisitions.

The Greenhouse Gas Technology Verification Center (the Center) is one of 12 independent verification entities operating under the ETV program. The Center is managed by EPA's partner verification organization, Southern Research Institute (SRI), and conducts verification testing of promising GHG mitigation and monitoring technologies. This Center's verification process consists of developing verification protocols, conducting field tests, collecting and interpreting field and other data, and reporting findings. Performance evaluations are conducted according to externally reviewed Verification Test Plans and established protocols for quality assurance.

The Center is guided by volunteer groups of Stakeholders. These Stakeholders offer advice on technology areas and specific technologies most appropriate for testing, help disseminate results, and review test plans and verification reports. The Center's Executive Stakeholder group consists of national and international experts in the areas of climate science, and environmental policy, technology, and regulation. It also includes industry trade organizations, environmental technology finance groups, various governmental organizations, and other interested groups. The Executive Stakeholder Group helps identify and select technology areas for verification. For example, the oil and gas industry was one of the first areas recommended by the Executive Stakeholder Group as having a need for high quality performance verification.

To pursue verification testing in the oil and gas industries, the Center established an Oil and Gas Industry Stakeholder Group. The group consists of representatives from the production, transmission, and storage sectors. It also includes technology vendors, technology service providers, environmental regulatory groups, and other government and non-government organizations. This group has voiced support for the Center's mission, identified a need for independent third-party verification, prioritized specific technologies for testing, and identified broadly acceptable verification strategies. They also indicated that technologies that reduce methane leaks from compressor rod packing are of great interest to the technology purchasers. In the natural gas industry, interstate gas pipeline operators use large gas-fired engines to provide the mechanical energy needed to drive pipeline gas compressors. In the U.S., fugitive natural gas leaks from these compressors represent a major source of methane emissions, and a loss of economic and natural resources.

To pursue verification testing on compressor rod packing technologies, the Center placed formal announcements in the Commerce Business Daily and industry trade journals to invite vendors of

commercial products to participate in independent testing. C. Lee Cook Division of the Dover Corporation responded, and committed to participate in a medium-term independent verification of their static sealing technology. The technology is referred to as the Static Pac™ and is designed to reduce methane leaks from compressor rod seals during periods when the compressor is in a standby and pressurized state.

Performance testing of the Static Pac™ was carried out at a compressor station operated by ANR Pipeline Company (ANR) of Detroit, Michigan. The verification test was planned to be executed in two phases where: Phase I evaluates short-term gas savings and documents installation costs; and Phase II addresses longer-term technical and economic performance. This report presents the results of the Phase I test, which occurred between July 15 and August 6, 1999.

Details on Phase I and II verification test design, measurement test procedures, and Quality Assurance/Quality Control (QA/QC) procedures can be found in the *Testing and Quality Assurance Plan for the C. Lee Cook Division, Dover Corporation Static Pac™ System* (SRI 1999*)*. It can be downloaded from the Center's Web site at www.sri-rtp.com. The Test Plan describes the rationale for the experimental design, the testing and instrument calibration procedures planned for use, and specific QA/QC goals and procedures. The plan was reviewed and revised based on comments received from C. Lee Cook, ANR Pipeline, selected members of the Oil and Gas Industry Stakeholder Group, and the EPA Quality Assurance Team. The plan meets the requirements of the Center's Quality Management Plan (QMP), and conforms with EPA's standard for environmental testing (E-4). In some cases, deviations from the Test Plan were required. These deviations, and the alternative procedures selected for use, are discussed in this report.

The remaining discussion in this section describes Static Pac™ technology and the goals of the verification tests. Section 2 presents a background discussion of methane emissions from natural gas compressors, descriptions of the test site, and the measurement system employed at the site. Section 3 presents Phase I test results, and Section 4 assesses the quality of the data obtained.

1.2 THE STATIC PAC™ TECHNOLOGY

One of the largest sources of fugitive natural gas emissions from compressor operations is the leakage associated with operating and idle-mode compressor rod packing. During standby conditions, natural gas leaks into the atmosphere from the packing case and other compressor emission sources. Based on an EPA/GRI study, reciprocating compressors in the gas transmission sector were operating 45 percent of the time in 1992 (Hummel et al., 1996). If rod leaks during standby operations are reduced or eliminated, significant gas savings and emissions reductions could be realized. The C. Lee Cook Static Pac™ device is intended to provide this benefit.

In general, compressor packing provides a seal around the rod shaft, keeping high-pressure gas contained in the compressor from leaking out into the atmosphere. A typical compressor packing case is shown in Figure 1-1 (see location No. 3). It consists of one or more sealing rings contained within a case that serves several functions. These functions include: lubrication, venting, purging, cooling, temperature and pressure measurement, leakage measurement, rod position detection, and sealing for standby mode operations (GRI 1997). In conventional packing, the sealing rings are configured in series to successively restrict the flow of gas into the distance piece between the compressor and the engine. The sealing rings are held in separate grooves or "cups" within the packing case, and are free to move laterally along with the rod and

"float" within the grooves. The distance piece, shown between locations 3 and 4 in Figure 1-1, typically vents rod packing leaks to the atmosphere.

Figure 1-1. Schematic of a Gas Compressor Engine and Rod Packing

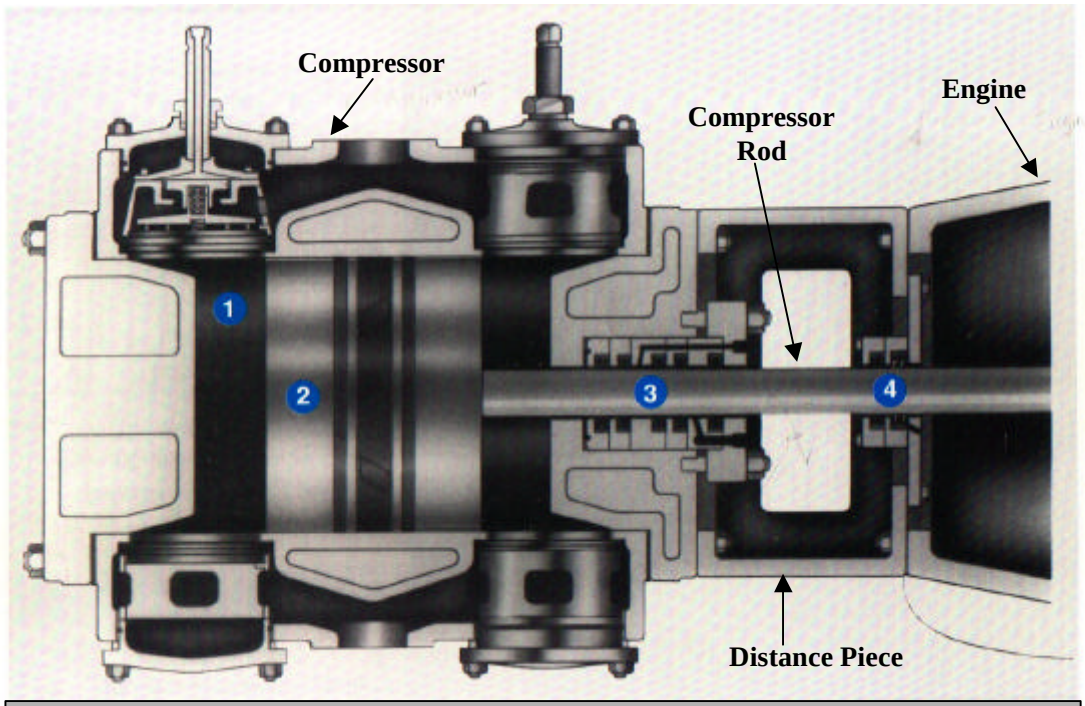

1 Compressor Valves and Unloaders
2 Piston & Rider Rings
3 Packing Rings & Case
4 Oil Wiper Rings & Cases

A conventional packing case usually contains seven to nine cups. Each cup houses one or more seal rings, which restrict the flow of natural gas into the atmosphere or out into the distance piece. Each ring seals against the piston rod and also against the face of the packing cup. The first cup is occupied by the breaker ring (see Figure 1-2), designed to reduce the pressure on the packing rings by providing an orifice restriction to flow. A second function of the breaker ring is to regulate the reverse flow of gas from the packing case into the cylinder. This reverse flow occurs as the piston begins the intake stroke, and the pressure is rapidly reduced in the cylinder.

Cups 2 through 6 are occupied by conventional three-ring packing sets which consist of a "radial cut" ring, a "tangent cut" ring, and a "backup" ring (see Figure 1-2). During the discharge stroke, while the compressor is operating, pressure is exerted on each ring. This forces the rings to mate against each other, and reduce leakage laterally along the rod. During this time, the tangent cut ring constricts against the rod, reducing leakage past the rod surface. During the intake stroke, pressure is rapidly reduced in the cylinder and gas flows from around the sealing rings back toward the cylinder. During this cycle, the rings are free to move back and forth within the cups

(depending on how much differential pressure is experienced between the discharge and intake strokes and the movement of the rod). The final cup houses a vent control ring which can be used to transport the leaking gas for subsequent use or discharge into the distance piece. A more detailed description of rod packing is given in GRI's report documenting existing compressor rod packing technology and emissions (GRI 1997).

Figure 1-2. Rod Packing - Ring Detail

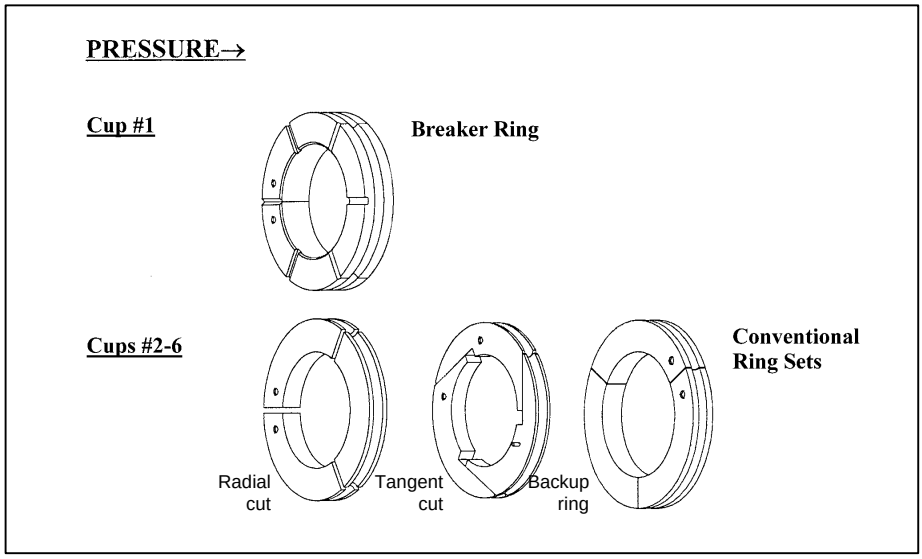

During idle periods the unit remains pressurized, and pressure equalizes around the rings and they can float within the cups. While they are floating, the pressure breaker rings and other rings downstream of the packing do not stop gas leakage. As a result, rod packing leaks continue when the rod motion has stopped. The leakage encountered during idle periods is due to the loss of lubrication oil which normally fills the leak paths, changes in the shape of the ring as it cools, and changes in rod alignment as the temperature changes (GRI 1997).

The Static Pac™ is a gas leak containment device designed to prevent rod packing leaks from escaping into the atmosphere during compressor shutdown periods. The Static Pac™ system is installed in a conventional packing case by typically replacing two cups in the low-pressure side of the packing case (see Figure 1-3). When the compressor shuts down, an automatic actuation valve is opened, admitting pressurized gas behind the internal piston. As shown in Figures 1-3 and 1-4, the movement of the piston wedges a lip seal into contact with the rod. When the actuating pressure is lowered during compressor startup, the piston retracts, causing the Static Pac™ seal to lift from the rod surface. A vent to atmosphere or some other low pressure area such as the "doghouse", must be located downstream of the Static Pac™ in order for the seal to actuate or release. A doghouse is an access port which is located between the engine and the compressor. By removing this access port, site operators can perform routine maintenance on the rod packing and its seals. Each doghouse contains an oil drain and a vent pipe; through which leaks are routed out of the compressor building into the atmosphere. Leaks that normally occur during periods of shutdown are reported by Cook to be completely or nearly eliminated.

Figure 1-3. Rod Packing Cutaway with Static Pac™

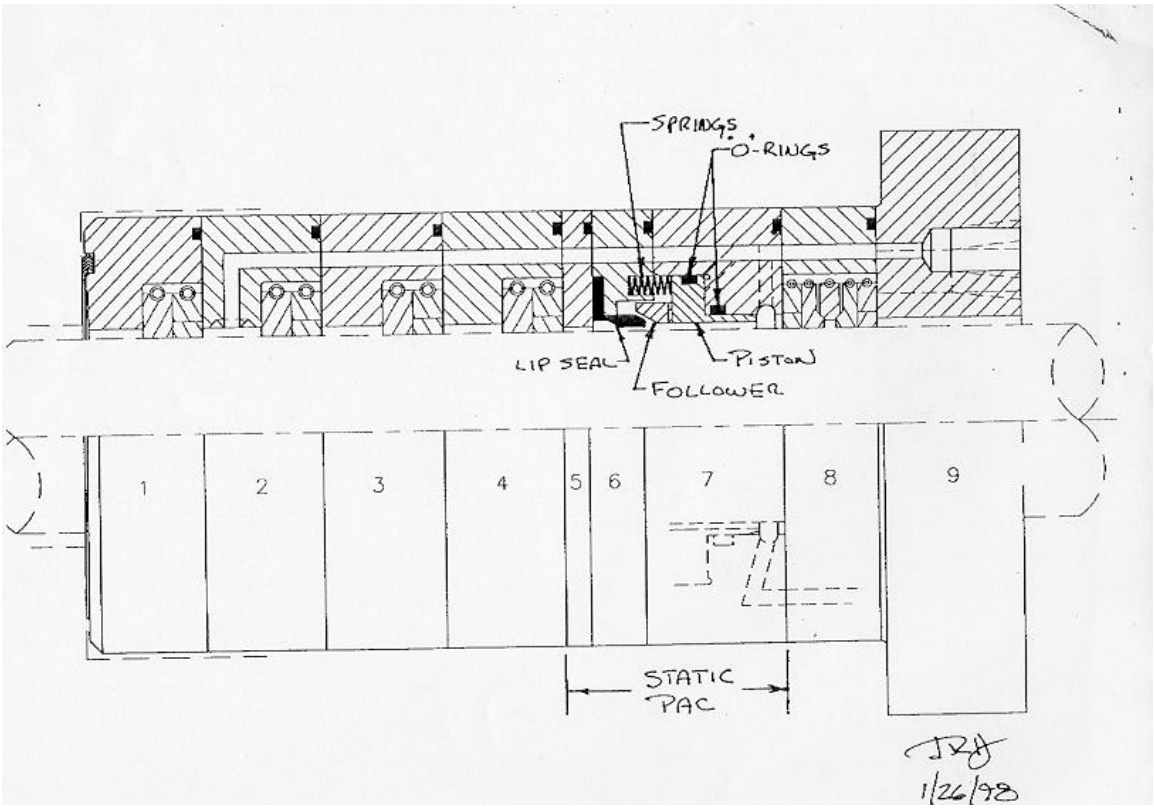

To allow room for the addition of the Static Pac™, a packing case with the Static Pac™ contains one less ring set than conventional packing. It is speculated that this "missing seal" can cause increases in rod emissions while the compressor is in operating mode. However, industry experience suggests that the Static Pac™ should not affect normal sealing during compressor operation. The Center was unable to locate reliable data to verify this claim. Therefore, the verification test approach, described in Section 2.2, assesses the effect (if any) of the Static Pac™ on normal sealing performance during compressor operation. This was accomplished by fitting one rod on the test engine with a Static Pac™ and the second rod with a new conventional packing. A second engine was fitted in the same manner to provide duplicate measurements.

Figure 1-4. Static Pac™ Actuation and Deactuation Process

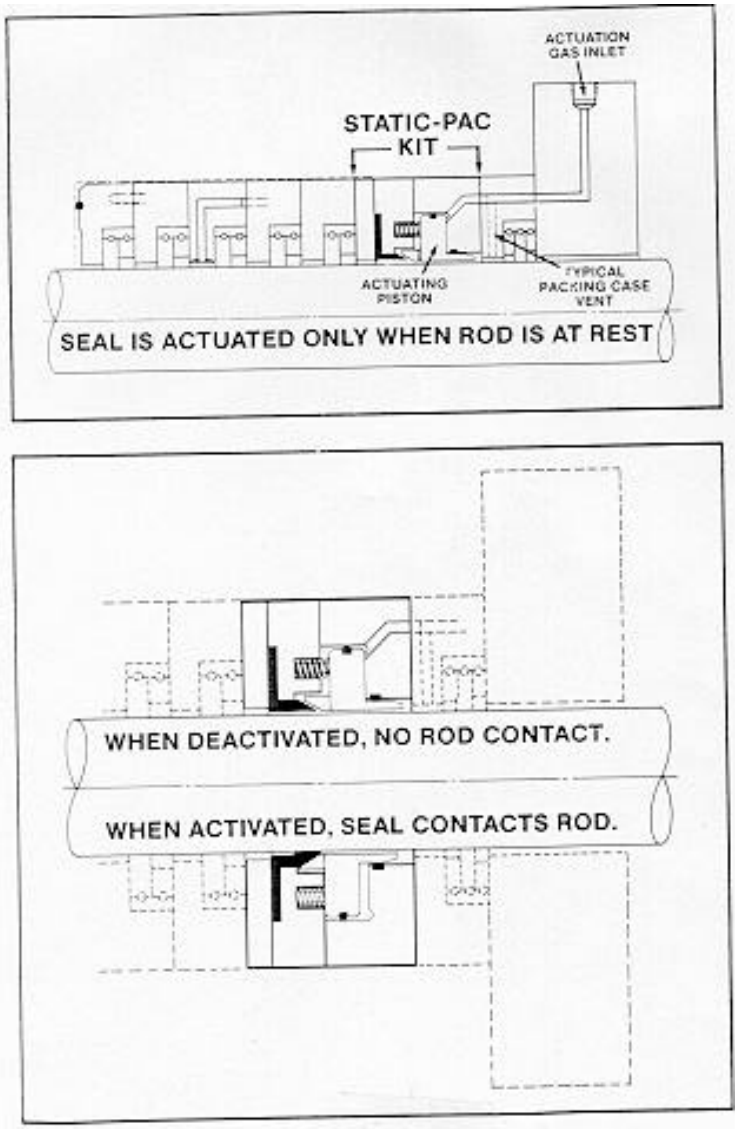

"Static Pac" is a registered trademark of C. Lee Cook covered by Patent No. 4469017.

1.3 VERIFICATION GOALS

Normal compressor shutdown and standby procedures vary from station to station. Some operators depressurize and blow down all pressure from a compressor before standby. Others depressurize the compressor to a lower but elevated pressure, while still others maintain full

pressure during standby. Adding the Static Pac™ to a compressor may result in varying levels of net gas savings and emission reductions depending on the shutdown procedure used. The evaluation of the Static Pac™ focused on two shutdown procedures that represent the most common approaches to compressor shutdown: remain pressurized during idle; and depressurized (blowdown) before idle. Shutdown modes are discussed in Section 2.1. The Phase I and II verification goals and parameters associated with these two compressor shutdown scenarios are outlined below.

Phase I Evaluation:

Verify initial gas savings for primary baseline conditions
Document installation and shakedown requirements
Document capital and installation costs

Phase II Evaluation:

Document annualized gas savings for primary baseline conditions
Verify annual methane emission reduction
Calculate and document Static Pac™ payback period

Phase I goals were achieved through observation, collection and analyses of direct gas measurements, and the use of site logs and vendor supplied cost and operational data. The evaluation was completed after about a 3-week period. Initial gas savings were based on two sets of manual emission measurements. The number and duration of shutdowns were determined from site records provided by ANR Pipeline Company for the testing period, and for previous years. Measured emission rates, site operational data, estimated gas savings, and installation requirements are documented and verified in this report.

A primary goal of the Phase II evaluation is to determine the Static Pac™ payback period. As a practical matter, the Center cannot conduct testing for the number of years that would be required to determine payback from direct measurements. Thus, several Phase II goals will be accomplished through a combination of medium-term measurements (several months) and data extrapolation techniques. A Phase II report is planned for release in 2000.

2.0 TECHNICAL BACKGROUND AND VERIFICATION APPROACH

2.1 METHANE EMISSIONS FROM NATURAL GAS COMPRESSORS

Fugitive natural gas emissions from compressor stations account for a significant loss in revenue for gas companies and increase a company's unaccounted for gas losses. These emissions also contribute to the release of methane, a potent greenhouse gas, into the atmosphere. Prior EPA and Gas Research Institute studies estimated that reciprocating compressors emitted approximately 21 percent of the total gas emissions (314 BCF) from the natural gas industry in 1992 (Harrison et al., 1996).

Methane emissions from compressors are liberated from a variety of different sources. These sources include leaks from the rod packing, unit valves, blowdown valve, pressure relief valve, and miscellaneous valves, fittings, and other devices. Emissions from blowdown operations are also significant. One source of fugitive natural gas emissions is the leakage associated with compressor rod packing. Most leaks occur from operating compressors, but emissions also occur when some compressors are placed into a standby or idle mode while remaining pressurized.

According to an ongoing, multi-year compressor station fugitive emissions study conducted by the Pipeline Research Committee (PRC), very little difference was observed between the overall average value of running rod packing emissions and pressurized, but idle, rod emissions. The overall average leak rate was approximately 1.86 cfm per rod (GRI 1997). This emission rate is higher than the 0.86 cfm per rod reported previously in an EPA/GRI study (Hummel et al., 1996). The PRC results are based on data collected from nine compressor stations, containing 56 reciprocating compressors and readings taken at 365 individual rod packings, compared to 135 measurements at six compressor stations in the EPA/GRI study. Nevertheless, both data sets are very useful in quantifying average rod emission rates throughout the natural gas industry.

Fugitive emissions from standby or idle mode compressors are affected by the compressor shutdown mode which varies from station to station. In general, the following procedures are used:

- Maintain full operating pressure when idle (either with or without the unit isolation valves open),
- Depressurize and blow down all pressure when idle (except a small residual pressure to prevent air in-leakage) and vent the gas, either partially or completely, to the atmosphere,
- Depressurize to a lower pressure, venting the gas either to the atmosphere or to the station fuel system, or
- A combination of these procedures.

Based on the EPA/GRI study, the first two operating procedures represent the most common approaches to compressor shutdown (Harrison et al., 1996). The study estimated that about 57 percent of idle transmission compressors are maintained at operating pressures and 38 percent are

blown down to the atmosphere. A smaller percentage (less than 5 percent) are blown down to a lower pressure, in some cases venting to the station's fuel system.

2.2 DESCRIPTION OF THE TEST SITE AND STATIC PAC™ INSTALLATION

Reciprocating compressors are the type most commonly used within the gas industry, and are a primary source of compressor-related emissions. Thus, the Static Pac™ verification was conducted at a transmission station that uses reciprocating compressors. ANR Pipeline Company expressed interest in hosting the verification, and assisted the Center in identifying a representative compressor station within their pipeline system. ANR reviewed its operations and identified facilities where: the Static Pac™ was not currently used; at least one compressor operates in a shutdown mode several times a year; and site operators could cooperate in support of the short- and long-term evaluations.

The natural gas transmission engine/compressor selected to host the Static Pac™ operates six Cooper-Bessemer engines (8-cylinder, 2000 hp), each equipped with two reciprocating compressors operating in series (4,275 cubic inch displacement, 4-inch rods). The low-speed engines at the site are typical of many used in the industry, but may not be typical of newer, high-speed engines in use. The rods and packing cases have the same basic design and function as most reciprocating compressors currently used and planned for use in the future in the transmission sector. The rod packing is essentially a dry seal system, using only a few ounces of lubricant per day. Wet seals, which use high-pressure oil to form a barrier against escaping gas, have traditionally been employed. According to the Natural Gas STAR partners, dry seal systems have recently come into favor because of lower power requirements, improved compressor and pipeline operating efficiency and performance, enhanced compressor reliability, and reduced maintenance. The STAR industry partners report that about 50 percent of new seal replacements consist of dry seal systems.

Two engines, designated 801 and 802, were selected to verify the performance of the Static Pac™ system (see Figure 2-1 for a simplified floor plan). These two engines are the same age and have similar operating hours, which is ANR's normal operating practice. Actual operating hours on each engine are logged continuously. Each engine contains two compressor rods, and nine cups are contained in each packing case. All rods are made of chrome-plated steel.

The Static Pac™ was installed on one compressor rod on each of the two engines. This rod is referred to as the Test Rod. The packing material on the second rod on each engine was replaced with new packing at the same time the Static Pac™ was installed. The second rod with the conventional packing served as the Control Rod against which Static Pac™ performance could be compared. The conventional packing normally used at the site is manufactured by C. Lee Cook. The comparisons were conducted both for idle periods and while the engine was running (i.e., to determine if the elimination of one of the seals in the Static Pac™ design affects normal sealing performance during compressor operation).

Figure 2-1. Simplified Floor Plan of the Test Site

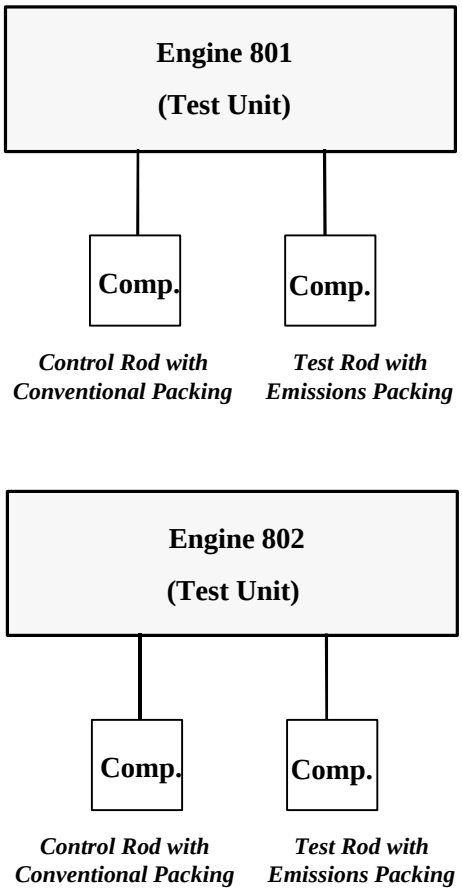

2.3 VERIFICATION APPROACH

2.3.1 Establishing Baseline Conditions

According to C. Lee Cook, the Static Pac™ can provide static sealing during idle periods, provided the compressor remains pressurized. The gas savings achieved depends on the emission characteristics of the compressors packing, both before and after installation of the Static Pac™. These savings also depend on the shutdown procedures used, and the number and duration of shutdowns experienced. For example, a station that currently leaves compressors pressurized during shutdown will achieve net savings from the decrease in rod packing leaks during idle periods. Alternatively, if a station currently blows down compressors before shutdown, installing the Emissions Packing would be associated with a change in operating practice to a pressurized shutdown condition. A likely scenario for such a change would be that the station wishes to eliminate blowdown emissions, and employs a static sealing system at the same time to reduce or

eliminate any additional emission from the newly pressurized, rod packings. In this case, gas savings occur by eliminating blow down emissions and unit valve leaks. However, there is a potential for increases in emissions from components now exposed to high pressure during shutdown.

For the two most commonly used compressor shutdown scenarios described in Section 2.1, Table 2-1 shows the relationship between compressor shutdown procedures and emissions. Because use of the Static Pac™ system is associated with pressurized compressor standby operation, the table indicates how compressor emissions may change from the emissions that occurred during the original standby mode. Using this table as a guide, a verification plan was developed to characterize all the emissions changes that may occur with the installation of the Static Pac™ and the possible adoption of a different shutdown procedure.

The evaluation of the Static Pac™ performance at ANR Pipeline Company focused on the two shutdown scenarios that collectively represent practices employed by about 95 percent of the transmission compressors (Shires and Harrison 1996). Case 1 represents compressors that remain pressurized when idle, and Case 2 represents compressors that completely depressurize and blow down all gas. The host site was asked to follow these practices during testing, although their normal practice is to maintain idle pressures of about 120 psig and recover all blowdown gas into the engine fuel system. The following discussion highlights the verification issues for each case and outlines measurements and data collection activities implemented in the verification test.

2.3.1.1 Case 1

Case 1 represents a compressor that normally maintains full operating pressure during idle periods. For this case, a change in emissions was anticipated to occur only at the rod packing due to the static sealing action of the Static Pac™. To quantify this potential change in rod packing leaks, direct methane emission rate measurements were conducted on the distance piece or doghouse vent pipes associated with the Control Rods and Test Rods for each of the two engines. Because the unit pressure is essentially unchanged during both operating and idle periods, all leak rates from other components (pressure relief valve, blowdown valve, unit valves, and miscellaneous flanges, valves, and fittings) can be assumed to remain constant after the installation of the Static Pac™. The idle-mode emissions from the two Control Rods are compared to idle-mode emissions from the two Test Rods. The difference between these two values are determined, and used to quantify the static sealing abilities of the Static Pac™.

Table 2-1. Common Shutdown Scenarios and Emissions		
Matrix of Shutdown Procedure Changes		
Procedure or Emission Source	**CASE 1**	**CASE 2**
Current shutdown procedure	Pressurized shutdown with unit valves open or closed[a]	Blowdown/100% vent to atmosphere
Procedure with emissions packing	n/c	Pressurized shutdown
Matrix of Possible Emissions Changes Due to Shutdown Procedure Changes or Installation of the Emissions Packing		
Rod seals	Decrease	Little or no increase
Blowdown volume	n/c[b]	Decrease
Unit valve seat (via open blowdown line)	n/c	Decrease
Blowdown valve	n/c	Increase
Pressure relief valve	n/c	Increase
Misc. valves, fittings, flanges, stems etc.	n/c	Increase

[a] Most sites leave the unit valves closed for safety reasons (i.e., sites may not want problems in the shutdown engine to affect the integrity of the entire station).
[b] n/c - no change/effectively no change
Shaded area represents measured parameters.

For Case 1, the savings consist solely of gas prevented from leaking from the rod packing during idle periods. This is the difference between the leak rate without the Static Pac™ (measured for the Control Rods) and the leak rate with the Static Pac™ (measured for the Test Rods). Equation 1 states how gas savings will be calculated.

$$G1 = [Q_u - Q_s] * t \qquad \text{(Eqn. 1)}$$

where,

G1 = average gas savings for the Phase I test period (Case 1), scf
Q_u = average uncontrolled leak rate during idle (Control Rod), scfm
Q_s = average controlled leak rate during idle (Test Rod), scfm
t = total shutdown or idle time during Phase I, minutes

2.3.1.2 Case 2

Case 2 represents a compressor that normally blows down from operating pressure to a minimum pressure during idle periods. At such times the pressure on compressor components is reduced to near atmospheric. Consequently, leaks from rod packing, pressure relief valves, and blowdown valves cease to exist. However, leaks from the unit valves, which are closed to isolate the

compressor from the pipeline, are liberated into the atmosphere. This gas leaks past the unit valves, into the compressor system, and out into the atmosphere via the open blowdown valve. Figure 2-2 is a simplified diagram of these emission sources. Because emissions associated with leaking unit valves can be substantial, measurements were made to quantify these emissions after blowdown was completed. When the Static Pac™ is installed, and a pressurized shutdown eliminates the unit valve leaks, this gas represents a savings associated with the use of the Static Pac™. In addition, the compressed gas contained in the compressor and lines is lost during blowdown. This gas must also be considered as a savings associated with the Static Pac™, and was calculated based on known volumes of compressor components and the measured operating pressure. All of these emission savings are added to the savings determined for the rod packing as described above, resulting in a total gas savings value for the Static Pac™.

Figure 2-2. Compressor/Engine Configuration and Emissions Sources

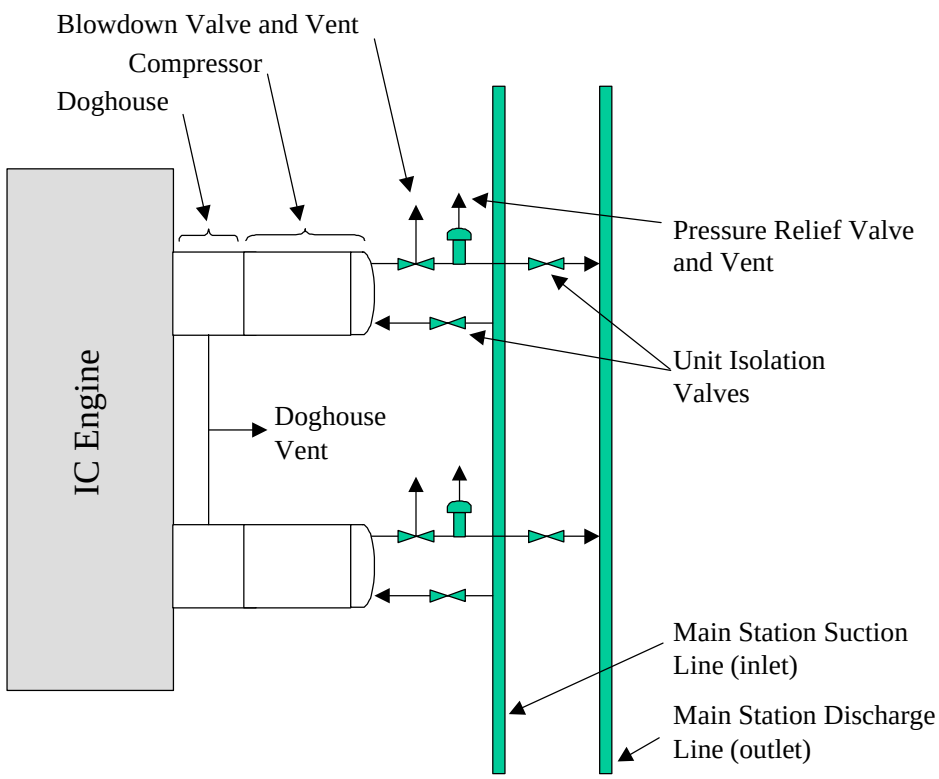

In contrast, emissions can increase from several components which are now exposed to high pressure. Ultimately, these leaks decrease the net gas savings associated with the Static Pac™. To verify this, methane emission rate measurements were conducted (during pressurized idle-mode) on all components newly exposed to elevated pressures as a result of the pressurized shutdown. These components include the pressure relief valve, the blowdown valve, and various flanges, connectors, and valves. Emissions from these devices are subtracted from the total savings above, to yield the net savings associated with the Static Pac™.

It is assumed that, following installation of the Static Pac™ and after a pressurized shutdown is adopted, the unit valve would be placed closed during shutdown (this was the host site's procedure). Compressor pressures were monitored during shutdown to determine if the pressure slowly dropped due to this closed valve, or if leaks from the closed valve were sufficient to maintain full compressor pressure.

For Case 2, gas savings consist of the blowdown volume (times the number of idle periods) and the unit valve leak rate (times the duration of idle periods). In addition, there are gas leakages from the blowdown valve, pressure relief valves, and miscellaneous components. Additionally, any gas that escapes past the Static Pac™ is lost (i.e., pressurized conditions may result in packing case leaks which are essentially zero during non-pressurized/blowdown conditions). For Case 2, the gas savings for each idle period were calculated as follows.

$$G2 = BDV + Q_{uv} * t - [Q_{prv} + Q_{bdv} + Q_{misc} + Q_s] * t \qquad \text{(Eqn. 2)}$$

where,

G2 = gas savings for each idle period (Case 2), scf
BDV = blowdown volume times the number of blowdowns during the Phase I period, scf
Q_{uv} = unit valve leak rate, scfm
Q_{prv} = pressure relief valve leak rate, scfm
Q_{bdv} = blowdown valve leak rate, scfm
Q_{misc} = aggregate leak rate for miscellaneous components, scfm
Q_s = test rod leak rate, scfm
t = idle time over the Phase I test period, minutes

2.3.1.3 Impact on Normal Running Emissions

With the Static Pac™ system, the packing case is modified, resulting in one less set of rings than conventional packing cases. With this change, there is a potential to alter the emission sealing performance of the overall packing system (i.e., cause an increase or decrease in packing emissions compared to the standard packing). To address this, measurements were conducted on the test and control rods, with the compressors in a normal operating state. It is assumed that after installation of the Static Pac™, the unit valve position (i.e., closed or open) would remain the same as before the Static Pac™ was installed. Any implied running emission changes were integrated into the assessment of net gas savings for the Static Pac™ system.

For example, if it was determined that the Static Pac™ caused any increase in emissions during normal compressor operation (see later discussion on running emissions), these emissions were subtracted from the gas savings. The following equation states how the total gas savings will be calculated for each case. The total gas savings, $G1_T$ and $G2_T$, for Case 1 and Case 2, respectively, Are given in equations 1a and 2a.

$$G1_T = G1 - V_m \qquad \text{(Eqn. 3)}$$

Where, V_m is any increase in operating emissions that occurred over the test period due to the Static Pac™. V_m is the difference in operating emissions (i.e., emissions during non-idle periods) between the Test and Control rods, times the number of minutes the compressor operated during the Phase I test period.

$$G2_T = G2 - V_m \qquad \text{(Eqn. 4)}$$

2.3.2 Emission Measurements and Calculations

The following discussion provides an overview of the measurements made, instruments used, field procedures followed, and key calculations made in the Phase I tests. For more detail on these topics, the reader should consult the Test Plan titled *Testing and Quality Assurance Plan for the C. Lee Cook Division, Dover Corporation Static Pac™ System* (July 1999). It can be downloaded from the Center's Web site at www sri-rtp.com.

To characterize the running emissions and Case 1/Case 2 idle emissions, manual emission measurements were collected on the following sources: doghouse vent, unit valve seat (via the open blowdown line), pressure relief valve vent, blowdown valve vent, and miscellaneous components (e.g., fittings, connections, valve stems). Tests were performed when the engine was pressurized and running, pressurized and idle, and depressurized and idle. For the rod packing leaks, tests were performed when the engine was pressurized and running, and pressurized and idle. Measurements of the leak rate for the blowdown valve, pressure relief valve, and miscellaneous other components were made when the unit was pressurized and idle. The unit valve leak rate measurement was made with the unit blowndown and the blowdown valve closed.

The measurements made and operating conditions under which testing was performed are listed below. One full day was needed to conduct this suite of measurements on both engines.

- With both units shut down and pressurized: natural gas leak rates for the pressure relief valve, blowdown valve, miscellaneous components, and rod packing vents (test rod and control rod)

- With both units blown down: natural gas leak rates for the unit valve and unit valve stem

- With both units running: natural gas leak rates for the doghouse vents (Test Rod and Control Rod)

Measured natural gas leak rates were converted to methane leak rates using natural gas compositional measurements (about 97 percent methane) provided by ANR Pipeline.

The station agreed to a limited number of scheduled shutdowns for the purpose of conducting the measurements described above. Results from these tests were used to characterize emission rates at the time of testing, and to characterize emissions differences between Cases 1 and 2, above. Net gas savings were calculated based on the number and duration of idle periods encountered at the site for the test period.

2.3.2.1 Rod Leak Rate Measurements

Emissions from the packing case vent and leaking rod seals are both vented into the distance piece or doghouse described in Section 1.2. Both emission sources vent gas that has escaped the

sealing action of the packing, and are included together when measuring emissions. After emissions are discharged into the doghouse, they are vented to the atmosphere through the doghouse vent. After soap screening all doghouse seals and connections and monitoring the long-term compositional trends of the gas exiting the doghouse, it was determined that no other gas was entering the doghouse. The doghouse vent and oil drain were the only paths by which emissions escaped into the atmosphere. For the test, the doghouse oil drain was sealed using ball valves, which forced all emissions to exit through the doghouse vent.

To measure these emissions, a Flow Tube was used to measure vent gas velocity, and a hydrocarbon analyzer was used to measure vent gas total hydrocarbon (THC) concentration before flow measurement started. In the original Test Plan, sensitive, low-pressure-drop continuous flowmeters were planned for use, but after their installation, it was determined that the pressure in the doghouse vents was so low that reliable flow detection could not be established. With this discovery, the decision was made to proceed with testing, and to use sensitive manual methods to conduct the measurements.

The Flow Tube consists of a sensitive 1-inch vane anemometer mounted on the inside walls of a polyvinyl chloride (PVC) tube that measures 30 inches in length and 1 inch in diameter. Just before taking velocity readings, the hydrocarbon concentration in the doghouse vent was measured using a portable hydrocarbon analyzer. The analyzer used was a Bascom-Turner CGI-201, with a 4-100 percent total hydrocarbon range, and an accuracy of 2 percent of the measured concentration. The CGI-201 measures all primary hydrocarbon compounds found in natural gas including methane, ethane, propane, and butane.

Before each trip to the site for on-site measurements, the Flow Tube was laboratory-calibrated using a NIST-traceable Laminar Flow Element and a wide range of simulated natural gas flow rates (99 percent methane, 0.3 to 4 scfm). These calibrations were used to generate a calibration curve which spanned the range of flow rates anticipated for the site. This curve was used to select a natural gas flow rate based on the indicated velocity from the flow tube. An example calibration chart is shown in Figure 2-3.

Figure 2-3. Flow Tube Calibration at Low Flows (6/2/99)

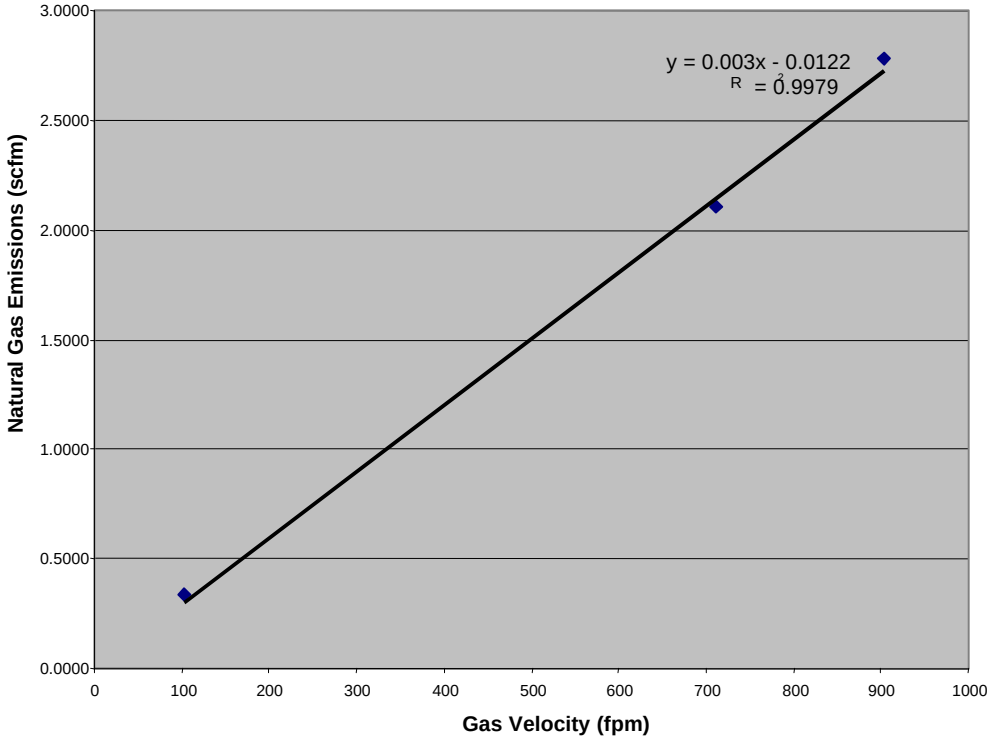

For each doghouse vent, a minimum of 10 separate gas velocity readings were measured with the Flow Tube. These measurements were made after the doghouse emissions were observed to stabilize (15 to 20 minutes after the vents were opened). In most cases, the 10 readings showed stable emissions. Each measurement represents a 16-second average value and, after completion, all values were averaged to yield an overall average total gas flow rate in feet per minute. Using this value, a natural gas flow rate was selected from the flow tube calibration curve.

The Flow Tube has a Lower Detectable Limit (LDL) of 0.12 scfm (i.e., flow rates below this value cannot be reliably detected with the instrument). When gas flows lower than the LDL were encountered, the anemometer inside the Flow Tube was visually inspected to confirm that the vane was turning. In these cases, a confirmation of the movement of the vane suggested that gas was indeed flowing through the tube, but at a rate less than the LDL. For these measurements, a gas flow rate equal to half the LDL (0.06 scfm) was assigned. If the vane anemometer was observed to be not turning, a gas flow reading equal to 0 scfm was assigned.

It should be noted that, after opening the doghouse vent for measurement, air typically enters and mixes with the natural gas leaking from the rod packing. The average THC level in the gas flows measured on the Control Rod was 85 percent, and on the Test Rod the level was 91 percent (running and idle). Given sufficient time, the rod leaks would completely purge all air from the doghouse, allowing direct measurement of pure natural gas with the Flow Tube. As a practical matter, this could not be done routinely. Based on the Center's experience with characterizing doghouse vent emissions at several compressor facilities, it is believed that the rod packing leak is the driving force which results in gas escaping through the vents (i.e., only one outlet stream is

present for the gas to escape and no other gas can enter the doghouse). As such, it is assumed that the flow rate measured during testing is representative of the flow rate of pure natural gas. This assumption was verified by monitoring composition on two vents over time (about 1 hour), and verifying that the composition eventually reached 92 to 94 percent THC.

2.3.2.2 Component Leak Rate Measurements

Manual measurements were made for the pressure relief valves, unit valves, blowdown valves, and miscellaneous components. The Center was unable to obtain a license in time to use the GRI Hi-Flow device as described in the Test Plan. Consequently, the Flow Tube, proven to be reliable on other similar measurements conducted by the Center, was used for this test.

The leak rates for the blowdown valve and pressure relief valve were measured with the unit shutdown and pressurized. Measurements for miscellaneous components were also made with the unit pressurized. Leak rates for the unit valve were measured with the unit depressurized and the valve closed.

The pressure relief valves vent through a 6-inch standpipe extending to the roof of the compressor building. Access to the roof was limited, and posed a hazard to the testing personnel. Thus, a hydrocarbon analyzer was first used to determine if leaks were present. If hydrocarbons were detected, the Flow Tube was to be used to quantify the gas flow rates. With the exception of making a direct connection to the 6-inch standpipe outlet, the sampling and calibration procedures described in the previous section apply to this emission source as well.

Flow measurements were conducted at an existing port, located immediately downstream of the unit valves in the suction line of each compressor. During compressor shutdown, any leaks from the seats of the unit valves will exit through this opened port. The leak rate for the unit valves was the highest flow measured at the host site. The leak rate was measured using the same Flow Tube applied to the rod packing vents. The anemometer mounted within the tube has the capacity to measure the high flows that occurred (e.g., a maximum of 6,500 fpm or about 25 cfm of natural gas could be measured). However, a different calibration chart from the one presented in Figure 2-1 was used to determine emission rates at the higher flows encountered with unit valves leaks (see Section 4 for more information on calibration).

The leak rate for the blowdown valve was measured at the flange located at the exit of the valve. To make this measurement, it was necessary to unbolt the flange, then separate the two sides by about 1 inch and then insert a disk. The disk contained channels that allowed the leak to be captured and directed into a small, sensitive low-flow-rate rotameter (Dwyer VB Series, 0 to 1000mL/min with a published accuracy and precision of $\pm$3 percent). The Flow Tube could not be used here because early field results indicated that relatively low flow rates existed at this location. The low-flow-rate rotameter was used because of the poor performance of the Flow Tube at these low flows.

The miscellaneous components at the test site consist of pressure and temperature metering taps, fittings that connect the taps to data transmitters, and valves used to recover gas for the fuel recovery system. The host station normally vents to a specially designed gas recovery system during shutdown, but performed a blowdown procedure for this verification, allowing an assessment of the Case 1 and Case 2 shutdown scenarios described above. Significant leaks were not expected at these locations; however, all components were soap screened and any leaks identified were to be quantified using the EPA protocol tent/bag method.

2.3.2.3 Natural Gas Composition Measurements

On-site natural gas compositional analysis is performed by ANR personnel. The site operators use a gas chromatograph (Daniel Model #2251) to determine the concentration of methane, hydrocarbons, and inert gas species present in the pipeline gas. The gas chromatograph is capable of measuring 0 to 100 percent methane, with an instrument accuracy and precision of $\pm$0.02 percent of full range. The instrument is calibrated each month using 97.0 percent certified methane gas.

The Center obtained copies of the fuel gas analyses results and their calibration records which corresponded to the Phase I measurements. An average methane concentration was calculated for those days when sampling was conducted. This value was multiplied by the natural gas savings measured for each case to calculate the standard cubic feet of methane saved.

2.3.2.4 Blowdown Volume Determination

The blowdown volume represents gas contained in the test compressor, engine, auxiliary piping, and all components located downstream of the unit valves. Based on records obtained from ANR, the total gas volume present in this equipment is 176 cubic feet. ANR engineers determined that at 700 psig pressure, 9,200 standard cubic feet natural gas occupies this volume (corrected for the compressibility factor). Because it is not feasible to directly measure the blowdown volume, 9,200 scf was used to represent the total gas that would be released into the atmosphere each time the test compressor was depressurized from 700 to 0 psig.

2.3.3 Site Operational Data

The number and duration of shutdown/idle periods must be specified to calculate the gas savings that occurred during the 3-week Phase I evaluation. Site records, provided by ANR pipeline, were used to determine the number and duration of shutdowns for the Phase I period. The ANR records identify daily compressor operating hours and the total hours the compressor was available (i.e., scheduled shutdown for maintenance is not included in the available hour values). Subtraction of the total available hours from the total operating hours yields the number of hours each unit was on idle. Because the number and duration of shutdowns were manipulated by the Center to ensure collection of the necessary measurements, those shutdowns that occurred at the Center's request were also subtracted.

The number of blowdowns was determined by accounting for each occurrence of an idle period. (It should be noted that this is an estimated value because the test site does not normally blowdown, but rather maintains a minimum pressure of 120 psig operating pressures during idle periods.) The number of blowdown occurrences assigned for the Case 2 evaluation is a synthetic value for sites that follow blowdown procedures.

3.0 RESULTS

3.1 ROD PACKING EMISSIONS

3.1.1 Emissions During Idle/Shutdown

Table 3-1 presents the measured packing vent emissions for Engines 801 and 802 during pressurized idle states, and Figure 3-1 illustrates the relative differences in emissions between the two engines. Five daily measurements were collected over the Phase I sampling period. These data span the range of time from when the packing was new until the packing had logged about 1900 hours of wear. Measurements were generally started 20 minutes after shutdown occurred, and required about 30 minutes to complete. Thus, the values reported below are representative of average emissions that occurred within about 45 minutes of compressor shutdown (unless the engine had been shut down overnight).

Table 3-1. Rod Seal Emissions of Natural Gas (Unit Idle & Pressurized)

Date	Approx. Run Time on New Seals (hrs) Control Rod / Test Rod	Engine Idle, Pressurized @ 700 psi		Difference Between Control Rod and Test Rod,[c] scfm natural gas
		Control Rod With Conventional Packing, scfm natural gas	Test Rod With Static Pac™, scfm natural gas	
ENGINE 801				
7/15/99	17 / 1340	0.92	<0.12 [a]	0.86
7/16/99	37 / 1365	0.72	<0.12 [a]	0.66
8/4/99	520 / 1850	<0.12 [a]	0 [b]	0.06
8/5/99	540 / 1870	<0.12 [a]	0 [b]	0.06
8/6/99	563 / 1893	0.50	0 [b]	0.50
ENGINE 802				
7/15/99	1 / 1	2.44	<0.12 [a]	2.38
7/16/99	19 / 19	0.79	<0.12 [a]	0.73
8/4/99	509 / 509	<0.12 [a]	<0.12 [a]	0
8/5/99	533 / 533	1.13	0 [b]	1.13
8/6/99	559 / 559	0.40	0 [b]	0.40

[a] For these samples, half the Lower Detectable Limit (0.06 scfm) was assigned because the vane anemometer inside the Flow Tube was visually confirmed to be moving during low flow conditions.
[b] For these samples, no movement of the vane anemometer was observed. An emission rate of 0 scfm is assigned.
[c] Difference = (Control Rod Emissions – Test Rod Emissions), positive values indicate gas savings are achieved.

In all cases, no flows were detected with the Static Pac™ during standby operation (i.e., gas velocities were less than the instrument LDL). For 50 percent of the samples, the vane anemometer was observed to be turning, but the emission rate was below the LDL to display a reading. For these samples, a flow reading equal to half the LDL (0.06 scfm) was used to calculate gas savings. For the remaining samples with flows less than the LDL, an emission value of 0 scfm was assigned.

Figure 3-1. Idle-Mode Emissions

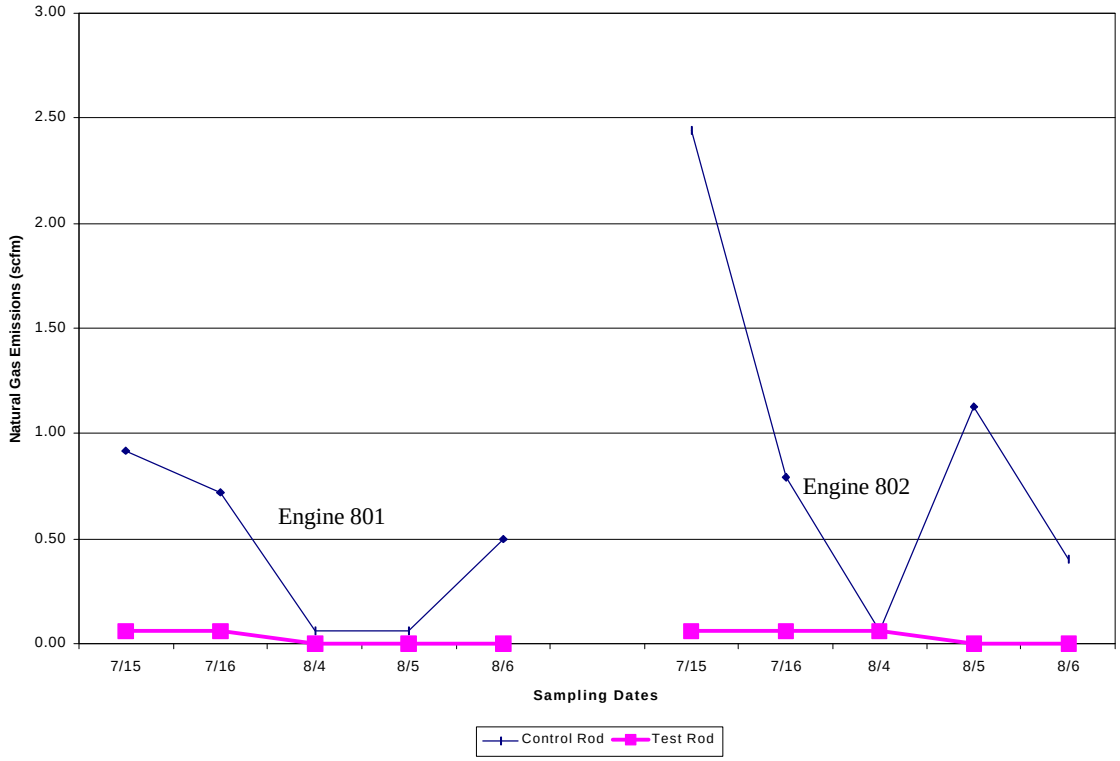

On Engine 801, the Static Pac™ was installed for the longest duration (about 1900 hours), and had time to be broken in. The average idle emissions on this Test Rod were 0.43 scfm natural gas lower than on the Control Rod. The performance was just as good for Engine 802, which contained the newest set of Static Pac™. The average emission reduction achieved on this engine was 0.93 scfm natural gas. Averaging the data from both engines, the overall average emission reduction with the Static Pac™ was 0.68 scfm natural gas (or 0.66 scfm CH_4). This is equivalent to a net emissions reduction of 96 percent with the use of a Static Pac™.

3.1.2 Emissions During Compressor Operation

Table 3-2 presents the measured packing vent emissions for Engines 801 and 802 during compressor operation. As before, five daily average natural gas emission rates are reported for each vent, and these data span the range of time from when the packing was new, until the packing had logged about 1900 hours of wear. Measurements were initiated at least 30 minutes after startup.

Table 3-2. Rod Seal Emissions of Natural Gas (Unit Operating)

Date	Approx. Run Time on New Seals, hrs Control Rod / Test Rod	Engine Running @ 700 psi		Difference Between Control Rod and Test Rod,[c] scfm
		Control Rod With Conventional Packing, scfm of natural gas	Test Rod With Static Pac™, scfm of natural gas	
ENGINE 801				
7/15/99	17 / 1340	0.87	0.43	0.44
7/16/99	37 / 1365	0.71	0.38	0.33
8/4/99	520 / 1850	0.48	0 [b]	0.48
8/5/99	540 / 1870	0.42	0 [b]	0.42
8/6/99	563 / 1893	0.49	0 [b]	0.49
ENGINE 802				
7/15/99	1 / 1	1.67	2.35	-0.68
7/16/99	19 / 19	0.92	1.06	-0.14
8/4/99	509 / 509	<0.12 [a]	0.70	-0.64
8/5/99	533 / 533	0.76	1.35	-0.59
8/6/99	559 / 559	0.47	0.68	-0.21

[a] For these samples, half the Lower Detectable Limit (0.06 scfm) was assigned because the vane anemometer inside the Flow Tube was visually confirmed to be moving during low flow conditions.
[b] For these samples, no movement of the vane anemometer was observed. An emission rate of 0 scfm is assigned.
[c] Difference = (Control Rod Emissions – Test Rod Emissions), positive values indicate gas savings are achieved.

For Engine 801, the Static Pac™ had overall average emissions that were 0.43 scfm natural gas lower than the conventional packing. Conversely, on Engine 802, the Static Pac™ running emissions were about 0.45 scfm natural gas higher than the conventional packing. Figure 3-2 plots the running emissions for both engines. As these data suggest, the variability between the Test and Control Rod emissions is similar, with the exception that the Static Pac™ emissions are lower for Engine 801 and higher for Engine 802. It is speculated that Engine 801 is showing improved performance because the Static Pac™ on this engine was older, and had ample time to be broken in. Averaging the data from both engines together, the Test Rod and Control Rod produced overall average emissions that were 0.70 scfm natural gas (or 0.68 scfm CH_4), indicating no change in running emissions due to the Static Pac™.

3.2 OTHER EMISSION SOURCES

3.2.1 Valve Leaks and Blowdown Volume

Measurements were conducted to quantify emissions associated with the closed and pressurized blowdown valve, pressure relief valve, and unit valves. These measurements represent the emissions leaking past the valve seats on each device. Estimates of the emissions associated with compressor blowdown operations are also presented, and are based on ANR-supplied gas pressures and equipment volumes. The sources addressed in this section are among the most significant fugitive emission sources associated with compressor operations. Measurements associated with the remaining minor sources (e.g., valve stems, fittings, and other minor fugitive sources) are addressed in Section 3.2.2.

Figure 3-2. Operating Emissions

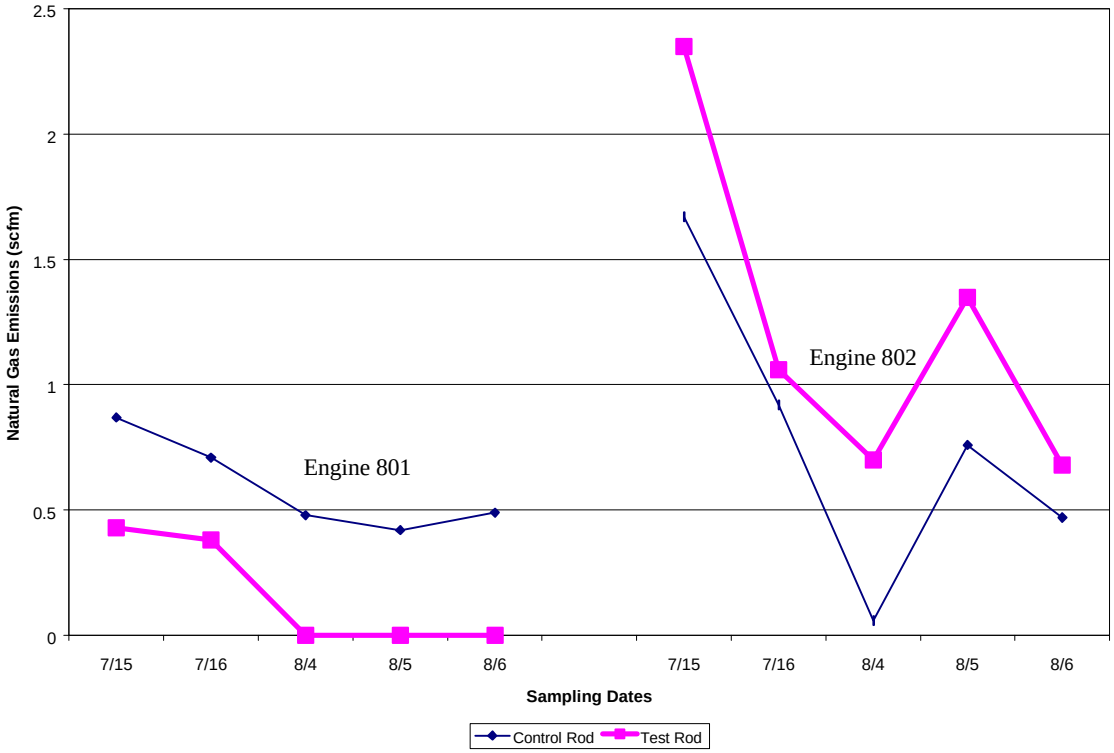

The results of these measurements are presented in Table 3-3. There were no detectable emissions from the blowdown valve and the pressure relief valve. Emissions from the unit valve were high and relatively consistent. The overall average emission rate was 4.86 scfm. The blow-down volume is constant (9,200 scf/event) because the operating pressure and equipment volume remained the same.

3.2.2 Miscellaneous Fugitive Sources

Once each day, miscellaneous fugitive emission sources were soap screened to identify components that were leaking significantly and in need of emission-rate measurement. The types of components screened are:

- Flanges – Valve, meter, pipe, and other flanges
- Miscellaneous fittings (tees, elbows, couplings, drains, ports, small valves)
- Blowdown gas recovery system components

The soap screening revealed no leaking components. This is not surprising, because most of these components are located in confined working areas, and any leaks could result in a significant safety hazard or triggering of the gas detection alarm system located at the site.

Table 3-3. Component Emissions				
Date	**Blowdown Valve, scfm natural gas**	**Pressure Relief Valve, scfm natural gas[a]**	**Unit Valve,[b] scfm natural gas**	**Blowdown Volume,[c] scf natural gas/event**
ENGINE 801				
7/15/99	0.00	0	3.31	9,200
8/4/99	0.00	0	6.22	9,200
8/5/99	0.00[d]	0	6.46	9,200
8/6/99	0.00[d]	0	5.39	9,200
ENGINE 802				
7/16/99	0.00	0	2.82	9,200
8/4/99	0.00	0	5.49	9,200
8/5/99	0.00[d]	0	5.00	9,200
8/6/99	0.00[d]	0	4.20	9,200

[a] Zero emissions are assigned because screening with a hydrocarbon analyzer did not detect measurable levels.
[b] Represents total emissions from both unit valves on the engine.
[c] Based on calculations performed by ANR engineers. This value represents the total volume of gas present in the test compressor, piping, and all equipment located downstream of the unit valves (at 700 psig).
[d] Zero values are assigned based on readings taken on August 4.

3.3 NET GAS SAVINGS

The primary verification parameter determined for the Phase I evaluation is net gas savings. The Phase I test period began after the new seals were installed and the engines were started (July 15, 1999), and ended on the last day of sampling (August 6, 1999). Net gas savings for the Phase I period were calculated for the Case 1 and Case 2 baseline shutdown scenarios based on the overall average emission rates presented in Sections 3.1 and 3.2 and engine operational data presented in the next section.

3.3.1 Compressor Operational Characteristics

To calculate net gas savings, the operational characteristics of both engines were defined on a daily basis. The operating characteristics of interest include the number of shutdowns, the number of hours in the idle mode, the number of hours in the running or operating mode, and the number of hours in the out-of-service mode (i.e., non-idle-mode such as maintenance and repair). These operating characteristics, presented in Table 3-4, were defined for Engines 801 and 802 using data supplied by ANR Pipeline. The gray areas in the table correspond with sampling conducted by the Center. Although several idle-mode shutdowns occurred on these days, they are not included in the determination of gas savings because these shutdowns were performed at the request of the Center. For the Phase I test period, Engine 801 was operating in the idle mode about 10 percent of the time, while Engine 802 was idle about 15 percent of the time.

Table 3-4. Engine Operating Schedule for Phase I

Engine	Date	Number of Shutdowns	Operational Data (Hrs)		
			Running	Out of Service	Idle
801	15-Jul				
	16-Jul				
*	17-Jul		24	0	0
	18-Jul		24	0	0
	19-Jul	1	15.2	0.1	8.7
	20-Jul		13.8	2.8	7.4
	21-Jul		24	0	0
	22-Jul		24	0	0
	23-Jul		24	0	0
	24-Jul		24	0	0
*	25-Jul		24	0	0
	26-Jul		24	0	0
	27-Jul	1	13.9	0	10.1
	28-Jul		9.7	6.4	7.9
	29-Jul		23.7	0.3	0
	30-Jul		24	0	0
	31-Jul		24	0	0
	1-Aug		24	0	0
	2-Aug		24	0	0
	3-Aug		24	0	0
	4-Aug				
	5-Aug				
	6-Aug				
TOTAL		2	340.3	9.6	34.1
802	15-Jul				
	16-Jul				
*	17-Jul		0	0	24
	18-Jul	1	0	0	24
	19-Jul		0	0	24
	20-Jul		14	0.1	9.9
	21-Jul		24	0	0
	22-Jul		24	0	0
	23-Jul		24	0	0
	24-Jul		24	0	0
*	25-Jul		24	0	0
	26-Jul		24	0	0
	27-Jul		24	0	0
	28-Jul		24	0	0
	29-Jul		24	0	0
	30-Jul		24	0	0
	31-Jul		24	0	0
	1-Aug		24	0	0
	2-Aug		24	0	0
	3-Aug		24	0	0
	4-Aug				
	5-Aug				
	6-Aug				
TOTAL		1	350	0.1	81.9

* Engine operating data were not available for these days. It was assumed that the operational schedule for these days was similar to the schedule that occurred on the following day.

Gray areas correspond with sampling conducted by the Center/

3.3.2 Case 1 and Case 2 Gas Savings

This section presents calculated gas savings associated with the Cook Static Pac™ for Engines 801 and 802. Savings are computed by comparing compressor emissions when the Static Pac™ is installed, with compressor emissions without the Static Pac™. The Static Pac™ requires that a pressurized shutdown/idle mode be used, and the gas savings achieved will be affected by how shutdown and idle mode operations are used prior to installing the Static Pac™.

Two base-case shutdown/idle modes are assumed. Case 1 represents the original use of a pressurized shutdown (same as Static Pac™ requires), and Case 2 represents the original use of compressor depressurization and blowdown. As a result of changing the packing, and possibly the shutdown/idle mode, a variety of emission changes will occur in both cases. Each change is quantified here, and the bullets below describe how each value is calculated. The emission factors referred to below are described in Sections 3.1 and 3.2, and are summarized in Table 3-5.

CASE 1 (no change in shutdown/idle mode; i.e., pressurized shutdown/idle continues):

- Rod seal savings while idle:
  Description: Rod packing emissions that are reduced by the Static Pac™ during idle periods
  Calculation: Idle hours(Control Rod emission factor - Test Rod emission factor)*
- Rod seal losses due to emissions increases while running:
  Description: Rod packing emissions increases caused by the Static Pac™ during operation
  Calculation: Running hours(Control Rod emission factor - Test Rod emission factor)*

CASE 2 (change from depressurize/blowdown mode to a pressurized mode):

- Rod seal increases while idle:
  Description: Idle-mode rod packing emissions from Static Pac™ (with new pressurized shutdown/idle mode, these emissions must now be added)
  Calculation: Idle hours(Test Rod emission factor)*
- Rod seal losses due to emissions increases while running: same as in Case 1
- Blowdown volume savings:
  Description: Gas contained in the compressor and piping released during shutdown (with new pressurized shutdown/idle mode, these emissions are no longer released)
  Calculation: Number of shutdowns(blowdown volume emission factor)*
- Blowdown valve leak losses:
  Description: Gas released from the closed blowdown valve (with new pressurized shutdown/idle mode, these emissions must now be added)
  Calculation: Idle hours(blowdown valve emission factor)*
- Unit valve leak savings:
  Description: Gas released from the closed unit valves (with new pressurized shutdown/idle mode, these emissions are no longer released)
  Calculation: Idle hours(unit valve emission factor)*
- PRV and miscellaneous component losses
  Description: Gas released from the pressure relief valve and miscellaneous fugitive sources (with new pressurized shutdown/idle mode, these emissions must now be added)
  Calculation: Idle hours(PRV + Miscellaneous components' emission factors = 0)*

Table 3-5. Overall Average Emission Factors (scfm gas)	
Control Rod $_{idle}$	0.71
Test Rod $_{idle}$	0.03
Control Rod $_{running}$	0.70
Test Rod $_{running}$	0.70
Blowdown Volume	9,200 / shutdown
Blowdown Valve	0.00
Unit Valve	4.86
Pressure Relief Valve and Misc. Components	0

Table 3-6 presents the gas savings for Cases 1 and 2. The definitions above correspond to specific columns in the table. The results show there are significant differences in gas savings between Engines 801 and 802, but these differences are driven primarily by differences in the number of idle hours that occurred during Phase I. Total natural gas savings for both engines under Case 1 were calculated to be 4,733 scf natural gas, or savings of about 41 scf natural gas/standby hour for each Test Rod. These gas savings occurred because the Static Pac™ reduced to 96 percent of emissions during the idle mode compared to the Control Rod. Total natural gas savings for both engines under Case 2 were calculated to be 61,217 scf natural gas, or savings of about 528 scf natural gas/standby hour for each Test Rod. For this case, the change in operating characteristics provided significant benefits. Elimination of the blowdown volume in Case 2 was the primary factor contributing to the gas savings that occurred.

From a greenhouse gas emissions standpoint, the natural gas savings and losses cited above were converted into methane emissions/losses by using natural gas compositional data routinely measured by ANR pipeline (see Section 2.3.2.3). An average 97.18 percent methane composition was measured during the Phase I test period by ANR and, based on this value, total methane reductions (savings) and increases were:

Case 1: Total methane <u>decrease</u> of 4,597 scf (1,352 and 3,245 scf CH_4 for Engines 801 and 802, respectively)
Case 2: Total methane <u>decrease</u> of 59,491 scf (27,484 and 32,006 scf CH_4 for Engines 801 and 802, respectively)

3.3.3 Estimated Gas Savings For Other Compressor Rods

The natural gas emission rates encountered at the test site were lower than the emission rates reported for rod packing leaks in the natural gas industry. Specifically, the EPA/GRI study reported an average rod packing leak rate of 1.0 cfm per rod (Hummel et al., 1996), while the PRC study reported an average leak rate of 1.9 cfm per rod (GRI 1997). To estimate potential gas savings that could be achieved for rods with higher emission potentials, the verification test data summarized above were used. An emission reduction of 96 percent was applied to represent gas savings achieved with the Static Pac™. All other parameters, including engine operating data and component emission rates, were assumed to be identical to the test site. The following summarizes natural gas savings expected to be achieved for sites characterized by the average rod packing leak rate of 1.9 cfm:

Case 1: Total gas savings equal 12,695 scf (3,732 and 8,963 for Engines 801 and 802, respectively)
Case 2: Total gas savings equal 60,897 scf (28,188 and 32,709 for Engines 801 and 802, respectively)

TABLE 3-6. Case 1 and Case 2 Gas Savings, scf Natural Gas

Engine	Date	CASE 1			CASE 2						
		Rod Seal Savings While Idle	Rod Seal Loss Due to Increase While Running	Total Savings	Rod Seal Increase While Idle	Rod Seal Loss Due to Increase While Running	Blowdown Valve Savings	Blowdown Valve Leak Loss	Unit Valve Leak Savings	Pressure Relief Valve and Misc. Comp. Loss	Total Savings
801	15-Jul	0	0	0	0	0	0	0	0	0	0
	16-Jul	0	0	0	0	0	0	0	0	0	0
	17-Jul	0	0	0	0	0	0	0	0	0	0
	18-Jul	0	0	0	0	0	0	0	0	0	0
	19-Jul	355	0	355	-16	0	9,200	0	2,537	0	11,721
	20-Jul	302	0	302	-13	0	0	0	2,158	0	2,145
	21-Jul	0	0	0	0	0	0	0	0	0	0
	22-Jul	0	0	0	0	0	0	0	0	0	0
	23-Jul	0	0	0	0	0	0	0	0	0	0
	24-Jul	0	0	0	0	0	0	0	0	0	0
	25-Jul	0	0	0	0	0	0	0	0	0	0
	26-Jul	0	0	0	0	0	0	0	0	0	0
	27-Jul	412	0	412	-18	0	9,200	0	2,945	0	12,127
	28-Jul	322	0	322	-14	0	0	0	2,304	0	2,289
	29-Jul	0	0	0	0	0	0	0	0	0	0
	30-Jul	0	0	0	0	0	0	0	0	0	0
	31-Jul	0	0	0	0	0	0	0	0	0	0
	1-Aug	0	0	0	0	0	0	0	0	0	0
	2-Aug	0	0	0	0	0	0	0	0	0	0
	3-Aug	0	0	0	0	0	0	0	0	0	0
	4-Aug	0	0	0	0	0	0	0	0	0	0
	5-Aug	0	0	0	0	0	0	0	0	0	0
	6-Aug	0	0	0	0	0	0	0	0	0	0
TOTAL		1,391	0	1,391	-61	0	18,400	0	9,944	0	28,282

(continued)

Table 3.6 (continued)

Engine	Date	CASE 1			CASE 2						
		Rod Seal Savings While Idle	Rod Seal Loss Due to Increase While Running	Total Savings	Rod Seal Increase While Idle	Rod Seal Loss Due to Increase While Running	Blowdown Valve Savings	Blowdown Valve Leak Loss	Unit Valve Leak Savings	Pressure Relief Valve and Misc. Comp. Loss	Total Savings
802	15-Jul	0	0	0	0	0	0	0	0	0	0
	16-Jul	0	0	0	0	0	0	0	0	0	0
	17-Jul	979	0	979	-43	0	0	0	6,998	0	6,955
	18-Jul	979	0	979	-43	0	9,200	0	6,998	0	16,155
	19-Jul	979	0	979	-43	0	0	0	6,998	0	6,955
	20-Jul	404	0	404	-18	0	0	0	2,887	0	2,869
	21-Jul	0	0	0	0	0	0	0	0	0	0
	22-Jul	0	0	0	0	0	0	0	0	0	0
	23-Jul	0	0	0	0	0	0	0	0	0	0
	24-Jul	0	0	0	0	0	0	0	0	0	0
	25-Jul	0	0	0	0	0	0	0	0	0	0
	26-Jul	0	0	0	0	0	0	0	0	0	0
	27-Jul	0	0	0	0	0	0	0	0	0	0
	28-Jul	0	0	0	0	0	0	0	0	0	0
	29-Jul	0	0	0	0	0	0	0	0	0	0
	30-Jul	0	0	0	0	0	0	0	0	0	0
	31-Jul	0	0	0	0	0	0	0	0	0	0
	1-Aug	0	0	0	0	0	0	0	0	0	0
	2-Aug	0	0	0	0	0	0	0	0	0	0
	3-Aug	0	0	0	0	0	0	0	0	0	0
	4-Aug	0	0	0	0	0	0	0	0	0	0
	5-Aug	0	0	0	0	0	0	0	0	0	0
	6-Aug	0	0	0	0	0	0	0	0	0	0
TOTAL		3,342	0	3,342	-147	0	9,200	0	23,882	0	32,935

As shown in Table 3-4, the total number of standby hours for both engines was 116 hours (Engine 801 total standby hours were 34.1 and Engine 802 total standby hours were 81.9). Assuming an average rod emission rate of 1.9 scf natural gas, this equates to Case 1 gas savings of 109 scf natural gas/standby hour for each Test Rod and Case 2 gas savings of 525 scf natural gas/standby hour for each Test Rod.

3.4 INSTALLATION REQUIREMENTS

Table 3-7 presents the equipment and labor costs for the Control Rod packing material and all costs related to the Static Pac™ system. These costs were obtained from C. Lee Cook and station operators.

On a per-rod basis, the capital cost for the Static Pac™ system was $4,088. This is about $2,638 higher than the conventional packing case installed on the Control Rod. The Static Pac™ system required 48 hours to install on each Test Rod (about 13 hours more than the Control Rod). Installation of the Static Pac™ was similar to that of a conventional packing case, with the exception that an automatic actuation system was required. The installation and operating procedures, as submitted by C. Lee Cook, are provided in Appendix A as a reference. No deviations from these procedures were observed in the field.

Based on the data presented in Table 3-7, the net incremental cost with the Static Pac™ system is $3,483.

Table 3-7. Static Pac™ Capital and Installation Costs

Test Rod		Control Rod		Incremental Cost Increase for a Rod Equipped with Static Pac™, $
Description	**Cost / Rod, $**	**Description**	**Cost / Rod, $**	
Capital Equipment				
Packing Case with Static Pac™	2,200	Conventional Packing Case	1,450	750
Automatic Actuator System	1,638	--	--	1,638
Miscellaneous Materials	250	--	--	250
Installation Labor				
Packing Case With Static Pac™	2,600[a] (40 hrs)	Conventional Packing Case	2,275[a] (35 hrs)	325
Actuator System	520[a] (8 hrs)	--	--	520
Total	**$7,208**		**$3,725**	**$3,483**

[a] Installation costs of $65 per hour are assumed.

4.0 DATA QUALITY

4.1 BACKGROUND

Information on data quality is used to characterize the level of uncertainty in measured values and verification parameters. The process of establishing data quality objectives starts with determining the desired level of confidence in the primary verification parameters. A primary parameter for Phase I was the establishment of idle-mode gas savings for the Static Pac™. These gas savings are used to help quantify the primary Phase II verification parameter the Static Pac™ payback period. The data quality objective that was established for the payback period defines the quality goals for all measured parameters. It is based on input from gas industry and other Stakeholder Group members, and allows for an error in payback values of about ± 3 to 4 months. This goal was used to set data quality goals for the following key measured values: rod packing emissions; valve emissions (unit, blowdown, and pressure relief valves); miscellaneous source emissions; and natural gas quality measurements. This section identifies these goals and discusses how they affect the Phase I verification results.

During the Phase I evaluation, field and laboratory measurements were collected in an effort to quantify uncertainty in the measured values identified above. For example, the accuracy and precision of the Flow Tube measurement were quantified with frequent calibrations and replicate samples, and these data were used to quantify uncertainty in the packing emissions rates presented in Section 3. These calibrations and replicate samples, along with accuracy and precision data provided by instrument vendors, were used to quantify uncertainty in the key Phase I verification parameter, natural gas savings. As a practical matter, one limitation on the quality and representativeness of the measurements collected is their relative infrequency. Although the level of uncertainty is associated with measurement frequency, it was addressed by repeating all measurements on two separate occasions. On each occasion, measurements were collected at least two separate times, and each result represented numerous individual quantifications.

4.2 ROD PACKING EMISSION RATE MEASUREMENTS

The MEM Rangemaster flowmeters originally planned for use on the doghouse vents did not function properly in the field. As a result, the use of these meters were replaced by manual Flow Tube measurements. Based on manufacturer supplied performance data for the MEM meters, the maximum error anticipated was ±2 percent of the instrument's full-scale reading. An error of 5 percent would have allowed the achievement of the data quality objectives set for the payback period and, considering the magnitude of the average emission rates measured at the site, the MEM meter may have resulted in an error of about 6 percent. Performance data collected on the Flow Tube suggest that the error associated with the emission rates measured at the site were low, exceeding the original performance goal for the MEM meters.

Table 4-1 presents Phase I calibration results for the Flow Tube, and shows the accuracy values developed from these data. The Flow Tube was calibrated with a laminar flow element (LFE), which itself was calibrated with a NIST-traceable primary standard. The average Flow Tube accuracy values presented for each run were calculated from the individual measurements in a run. Individual measurement accuracy values were calculated by determining the differences between the Flow Tube and LFE flow rates (Flow Tube minus LFE), dividing this value by the

LFE flow rate, and then multiplying by 100. As the table shows, the average accuracy of the Flow Tube ranged from -1.54 to -2.73 percent of the value measured by the LFE (overall average of -2.10 percent). The instrument provided acceptable readings across most of the flow range represented in Table 4-1, but a relatively consistent negative bias was observed at low flow rates. Specifically, at flows less than about 0.3 scfm, a negative bias (between -11 and -17 percent) was observed for all calibration runs. This error applies to the flow readings recorded for the Test Rod during idle periods which were below the LDL. For these values, the overall average Flow Tube accuracy was -13.5 percent. This value is used to determine the level of actual uncertainty in the net gas savings values described in Section 4.3.

Table 4-1. Flow Tube Calibration Results (low flows)

Date	Run	Flow Tube Velocity, fpm	Flow Tube Methane Flow Rate, scfm	LFE Pressure Drop, in. H_2O	LFE Methane Flow Rate, scfm	Flow Tube Accuracy,[a] %
6/2/99	1	102	0.2938	0.98	0.3405	
		238	0.7018	2.00	0.6949	
		484	1.4398	4.05	1.4072	
		711	2.1208	6.05	2.1021	
		905	2.7028	8.00	2.7796	
					Run Average	-2.46
6/2/99	2	101	0.2969	0.98	0.3405	
		236	0.7019	2.00	0.6949	
		486	1.4519	4.05	1.4072	
		712	2.1299	6.05	2.1021	
		908	2.7179	8.00	2.7796	
					Run Average	-1.90
7/2/99	1	113	0.3156	1.02	0.3543	
		202	0.6983	2.03	0.7052	
		368	1.4121	4.03	1.3997	
		528	2.1001	6.02	2.0917	
		683	2.7666	8.05	2.8033	
		843	3.4546	10.10	3.5172	
					Run Average	-2.28
7/2/99	2	103	0.2987	1.04	0.3619	
		203	0.7187	2.05	0.7136	
		370	1.4201	3.98	1.3850	
		535	2.1131	6.01	2.0937	
		694	2.7809	8.04	2.8075	
		850	3.4361	10.05	3.5104	
					Run Average	-2.73
7/23/99	1	109	0.3537	1.11	0.3867	
		249	0.7457	2.04	0.7107	
		478	1.3869	4.05	1.4123	
		733	2.1009	6.03	2.1064	
		967	2.7561	8.01	2.8132	
					Run Average	-1.54
7/23/99	2	59	0.3206	1.11	0.3900	
		219	0.7526	2.02	0.7102	
		481	1.4600	4.00	1.4077	
		736	2.1485	5.99	2.1182	
		978	2.8019	8.04	2.8510	
					Run Average	-1.68
					Overall Average	-2.10

[a] Rounding error may prevent the reader from calculating the exact run average percentages using the concentration data presented in the table.

Precision and/or repeatability were assessed by conducting replicate calibrations. The calibrations conducted on 6/2/99 represent the only set of calibration replicates where the reference flow rates (i.e., the LFE flow rate) were precisely duplicated for both runs. In the other calibrations, the duplication of flow conditions was close, but not exact. Figure 4-1 presents a plot of the calibration results collected on 6/2/99. The two lines plot the difference between the Flow Tube flow rates and LFE rates divided by the LFE rates. These values are plotted for each of the five flow rate conditions examined, so if the Flow Tube values were 100 percent repeatable at all flow conditions, only one line would be visible. In this case, repeatability is not exact but is acceptable at all calibration flow conditions. Overall Flow Tube repeatability was calculated for 6/2/99 by: calculating the average difference between the two Flow Tube rates measured for each of two runs at the five flow conditions; dividing this value by the average reference concentration across all flow conditions; and multiplying by 100. This value, calculated to be -0.54 percent, is a measure of the degree of Flow Tube variability observed relative to the actual or reference flow. The trends observed in the 6/2/99 data were apparent in plots of all calibration results collected.

Figure 4-1. Flow Tube Repeatability (6/2/99)

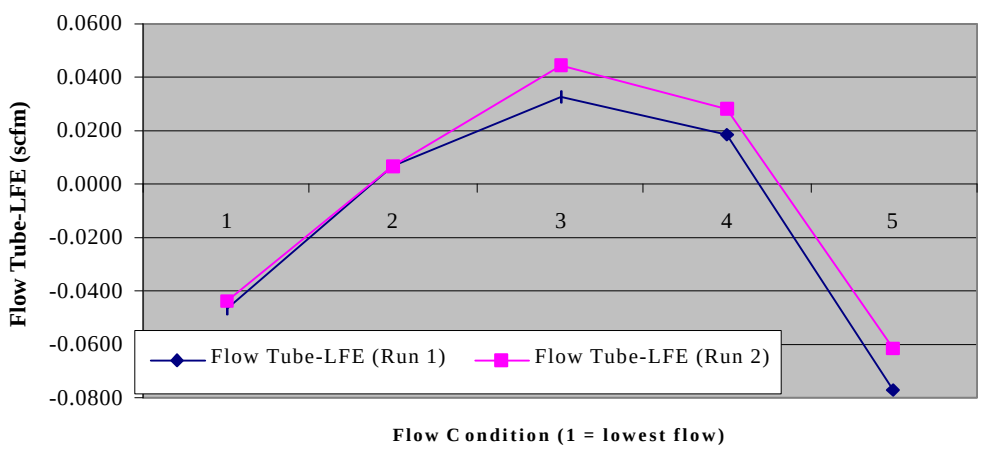

Gas savings for the rod packing are determined as the difference between the packing emission rates measured on the Test and Control Rods. Thus, the total error in the difference is the sum of the absolute errors in each measurement. This principle, along with the average accuracy value of -13.5 percent for Test Rod readings and -2.10 percent for Control Rod readings, was used to determine potential levels of error in net gas savings. This overall error is presented in Section 4.3.

Finally, the original completeness goal for rod packing emissions measurements required the completion of 90 percent of hourly measurements throughout Phase I. As discussed in Section 3.1, continuous measurements were not feasible, and an alternate method of manual sampling was required. The measurements data collected represent 5 days of sampling, and cover the performance levels immediately after, and several weeks after, the Static Pacs™ were installed.

4.2.1 Unit Valve, Blowdown Valve, and Pressure Relief Valve

The Test Plan specified using the Hi-Flow device and/or EPA's protocol tent/bag method for manual testing of the blowdown valve, pressure relief valve, and unit valves. As discussed earlier, the Center was unable to obtain a license in time to use the Hi-Flow device. Therefore, measurements were made using other calibrated instruments. In all cases, the data quality achieved with these alternate methods were higher than the 10 percent accuracy and precision goals set for the Hi-Flow device. QA results associated with each instrument are described below. Data quality considerations for the estimated blowdown volume are also discussed.

The pressure relief and unit valve leak rates were measured using the same Flow Tube discussed earlier. Because flow was not detected for any pressure relief valves, QA and calibration data are not presented for them. For the unit valve, the Flow Tube calibration data presented in Section 4.2 are applicable to the few low-flow rate measurements collected on this device. In most cases, flow rates were higher, and a high-flow calibration chart was developed and used after the field study was completed to convert measured gas velocities into natural gas flow rates. The same Flow Tube calibration procedures described for the rod packing vent measurements were followed here, and the calibration data developed at high flows are presented in Table 4-2. A calibration chart, similar to the Flow Tube calibration chart presented in Section 2 for the rod packing vent measurements, is shown in Figure 4-2. The Flow Tube accuracy at high-flow regimes was found to perform as good as or better than the accuracy observed at lower flow regimes. Figure 4-2 clearly shows that the natural gas flow rate is linearly proportional to the gas velocity measured with the Flow Tube. The accuracy and precision of the Flow Tube exceeded the 10 percent goal set with the Hi-Flow device.

Table 4-2. Flow Tube Calibration Results (high flows)

Date	Run	Flow Tube Velocity, fpm	Flow Tube Methane Flow Rate, scfm	LFE Pressure Drop, in. H_2O	LFE Methane Flow Rate, scfm	Flow Tube Accuracy, %
8/12/99	1	120	0.26	0.05	0.32	
		454	1.36	0.20	1.31	
		871	2.74	0.40	2.62	
		1269	4.05	0.60	3.99	
		1704	5.48	0.80	5.35	
		2087	6.75	1.00	6.72	
					Run Average	-1.40
8/12/99	2	140	0.31	0.05	0.33	
		454	1.35	0.20	1.32	
		866	2.71	0.40	2.64	
		1262	4.02	0.60	3.97	
		1686	5.42	0.80	5.31	
		2092	6.75	1.00	6.67	
					Run Average	0.80
					Overall Average	-0.30

Figure 4-2. Flow Tube Calibration at High Flows (8/12/99)

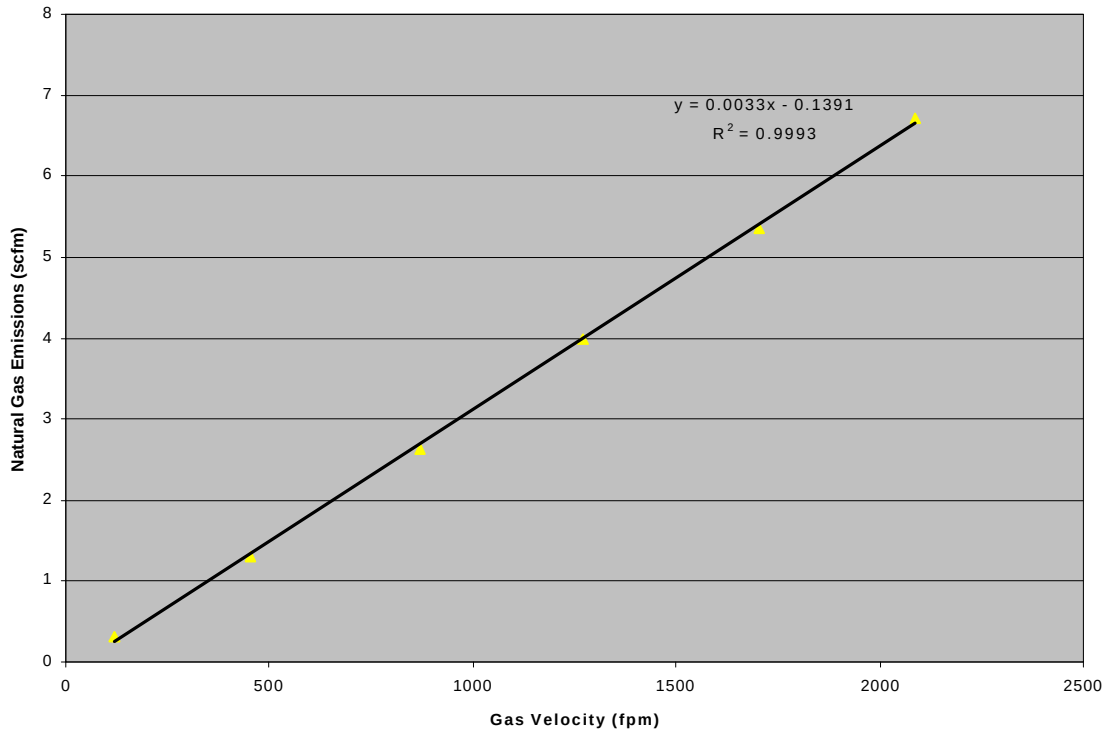

The Flow Tube was originally planned for use on the blowdown valve as well. However, early field results suggested that the flow rates from the blowdown valve were very low (i.e., there was no response), and Flow Tube calibrations suggested performance was poor in this regime. Therefore, a low-flow rotameter was used to conduct measurements on the blow,-down valve. The calibration results for this device are presented in Table 4-3. The original accuracy goals for this measured parameter are also shown for comparison.

Table 4-3. Rotameter Calibration Results

Measurement Instrument Used	Calibration Date	Range	Accuracy, %		Precision, %	
			Goal[a]	Actual	Goal[a]	Actual
Rotameter (Dwyer VB Series)	8/9	0 to 1000 mL/min	10	1.38	10	-0.73

[a] Represents accuracy and precision goals set for the Hi-Flow device in the Test Plan.

For the miscellaneous components such as flanges and valve stems, it was not possible to effectively channel the leaking gas to the flow tube. For these types of fugitive sources, soap screening was used to identify significant leaks and, when flow rate determination was needed, EPA's protocol tent/bag method was planned for use. Since significant leaks were not found, the tent/bag method was not applied, and the data quality information is not presented.

The average accuracy values presented here are used in Section 4.3 to assess how these measured values may contribute to overall uncertainty in the natural gas savings estimated for Cases 1 and 2.

4.2.2 Gas Composition

Based on average gas compositional data supplied by ANR, the average methane concentration in the natural gas was determined to be 97.18 percent. The accuracy of these readings was determined to be 0.12 percent.

4.2.3 Blowdown Volume

Blowdown volume was quantified based on the volume of piping and manifolds in the compressor system, and is accurate to within the piping specifications (assumed to be 100 percent accurate). The unit pressure, which was measured at the station by ANR engine monitors, was used to convert the calculated volume into a volume of natural gas at standard conditions. Generally, the host site operated at about 700 psig suction pressure. Unfortunately, calibration records for the pressure monitor are not maintained by ANR, so accuracy estimates for this measured parameter could not be determined. However, the accuracy of the pressure sensor was not required because the blowdown volume was calculated based on a typical suction pressure of 700 psig.

4.3 OVERALL UNCERTAINTY IN THE MEASUREMENTS, NET GAS SAVINGS, AND METHANE EMISSIONS VALUES

Calibrations were conducted by the Center on most of the instruments used in this verification. These data are summarized in Table 4-4. In a few cases, performance data supplied by either the instrument vendor or ANR Pipeline were used. These data are also presented in Table 4-4.

Table 4-4. Summary of Instrument Performance Data

Measurement Instrument Used	Applicable Source	Source of Performance Data	Accuracy (%)	Precision (%)
Flow Tube	Doghouse Vents	The Center	2.10 (-13.5)[a]	-0.54
	Unit Valve Leaks	The Center	- 0.30	+ 1.81
Rotameter	Blowdown Valve Leaks	The Center	+ 1.38	- 0.73
Gas Chromatograph	All (convert natural gas emissions into methane emissions)	ANR Pipeline	0.12	Not available
Hydrocarbon Analyzer	Pressure relief valve and misc. components	The Center	1.5	0.5

[a] The value in parentheses represents the accuracy when flows were less than 0.3 scfm. It was used to assess uncertainty in net gas savings.

The measurement accuracy values presented above were used to calculate how measurement error might propagate through the calculation process used to determine net gas savings and methane emissions for the Static Pac™. Based on these calculations, uncertainty or potential error in the net gas savings and methane emissions values for Case 1 is estimated to be ±2 percent. For Case 2, more individual measurements were collected and a greater opportunity for error existed. In this case, the overall uncertainty or potential error is estimated to be ±4 percent.

It should be noted that the estimated errors above represent uncertainty introduced by the measurements methods used. They do not include uncertainty or bias that could be introduced into the results attributable to: differences in the host sites' design or operating characteristics relative to other sites; the frequency of measurements conducted; or environmental, diurnal, geographic, or other potential biasing factors. The Center conducted this evaluation over a 3 week period, and collected several separate measurements data sets in an effort to address some of these potentially biasing factors.

5.0 REFERENCES

GRI 1997. *Documentation of Existing Rod Packing Technology and Emissions*. GRI-97/0393, Gas Research Institute, Chicago, IL, December 1997.

Harrison, Matthew R., Lisa M. Campbell, Theresa M. Shires, and R. Michael Cowgill 1996. *Methane Emissions from the Natural Gas Industry*, Volume 2: Technical Report, EPA-600/R-96-080b, (NTIS PB97-142939), U.S. Environmental Protection Agency, National Risk Management Research Laboratory, Research Triangle Park, NC, June 1996.

Hummel, Kirk E., Lisa M. Campbell, and Matthew R. Harrison 1996. *Methane Emissions from the Natural Gas Industry, Volume 8: Equipment Leaks*, EPA-600/R-96-080h, (NTIS PB97-143002), U.S. Environmental Protection Agency, National Risk Management Research Laboratory, Research Triangle Park, NC, June 1996.

Shires, Theresa M. and Matthew R. Harrison 1996. *Methane Emissions from the Natural Gas Industry, Volume 7: Blow and Purge Activities.* EPA-600/R-96-080g, (NTIS PB97-142988), U.S. Environmental Protection Agency, National Risk Management Research Laboratory, Research Triangle Park, NC, June 1996.

SRI 1999. *Testing and Quality Assurance Plan for the C. Lee Cook Division, Dover Corporation Static Pac™ System*, SRI/USEPA-GHG-QAP-04, Greenhouse Gas Technology Verification Center, Southern Research Institute, Research Triangle Park, NC, July 1999.

APPENDIX A

Static Pac™ Operator's Manual
Automatic Control System

INSTALLATION AND OPERATION

A. INSTALLATION

The Static-Pac Automatic Control is designed to be used with a pneumatic engine control system which includes a pneumatically operated cranking air valve, pneumatic ignition switch, and/or a pneumatically operated fuel gas valve.

The Static-Pac control will automatically engage and disengage the compressor packing Static-Pac(s) with commands from the engine control system when properly installed.

The starting air command signal from the engine control system is to be disconnected from the pilot of the starting air valve and connected to bulkhead no. 5 of the Static-Pac control. The pilot of the starting air valve should be connected to bulkhead no. 1 of the Static-Pac control. Install a tee fitting in the ignition command line from the engine control panel and connect the branch of the tee to bulkhead no. 3 of the Static-Pac control (If an ignition-ON command signal is not available, the fuel-ON signal can be used instead). Connect bulkhead no. 2 to pilot (operator) of high pressure valve 100-1; connect high pressure gas supply to blocked inlet port of valve 100-1, connect Static-Pac(s) to opposite port, pipe third port (vent) to a safe, unrestricted vent system to atmosphere. Connect bulkhead no. 4 to indicator 19R-1, after indicator has been positioned in desired location. Connect 60 to 125 psig filtered supply air to bulkhead no. 6. Installation is complete.

B. OPERATION

Engine/compressor is stopped. Supply air and engine panel Starting Air and Ignition (or fuel) command signals are connected to Static-Pac control. High pressure gas is connected to the inlet of control valve 100-1 which is piped to Static-Pac(s) and to vent.

Supply air enters through bulkhead no. 6 to the inlet of valve 9-1. If 9-1 is not manually latched closed, air passes through 9-1 to bulkhead no. 2 and bulkhead no. 4. Pressure from bulkhead no. 2 engages pilot (operator) of valve 100-1, shifting valve so that high pressure gas passes through valve to Static-Pac(s) on compressor, causing them to engage. Pressure from bulkhead no. 4 is routed to to indicator 19R-1, shifting it to the red position to show that the Static-Pac(s) are engaged.

When the engine control system sends the starting air command signal to bulkhead no. 5, air will flow to shuttle valve 15-1 and on through flow control valve 13-2 in the unrestricted direction to immediately fill volume chamber 20-2, shifting valve 9-1. Valve 9-1 when shifted vents bulkheads 2 & 4, allowing valve 100-1 to vent the Static-Pac(s) and indicator 19R-1 which returns to the black position. The Static-Pac(s) are now disengaged.

Simultaneously, air is flowing through flow control valve 13-1 in the restricted direction to slowly fill volume chamber 20-1 which is connected to the pilot of valve 8-1. Valve 13-1 is adjusted for a 15 second delay after which valve 8-1 shifts to the open position, allowing pressure to flow through bulkhead no. 1 to the pilot of starting air valve, cranking the engine. The time delay insures that the Static-Pac(s) are disengaged before the engine rolls. At the proper time, the engine control panel will send a Ignition-ON (or Fuel-ON) signal to Static-Pac control bulkhead no. 3. This signal will remain while engine is running and through shuttle valve 15-1 will keep signal to pilot valve 100-1 vented, keeping Static-Pac(s) on compressor disengaged.

Starting air signal at bulkhead no. 5 will be vented after engine has attained firing speed and valve 8-1 will return to the normally closed position, venting the pilot of the starting air valve, stopping all cranking. Check valve 80-1 insures that pilot air is vented from the starting air valve immediately on the loss of the starting air command signal. The engine is now running with the Static-Pac(s) on the compressor disengaged.

When the engine control system signals a shut down by venting pressure from bulkhead no. 3, the air trapped in volume chamber 20-2 will be slowly vented through flow control valve 13-2 in the restricted direction and on through shuttle valve 15-1 to bulkhead no. 3. Valve 13-2 is adjusted to provide a time delay (up to two minutes) before valve 9-1 shifts to permit the engine/compressor to come to a full stop before engaging the compressor Static-Pac(s). When the pressure is removed from the pilot of valve 9-1, the valve will return to the normally open position allowing pressure to flow through from bulkhead no. 6 to bulkheads no. 2 & 4 causing valve 100-1 to apply pressure to the Static-Pac(s) and to indicator 19R-1, returning is to the red position "STATIC-PAC(s) ENGAGED".

The Static-Pac control can be operated manually to disengage the compressor Static-Pac(s) for maintenance when the engine/compressor is shut down. Raise the red lever on valve 9-1 to disengage the Static-Pac(s), lower the lever to re-engage. Should the lever be accidently left in the manually disengaged position, it will automatically return to normal after the next start/stop sequence.

F1268P

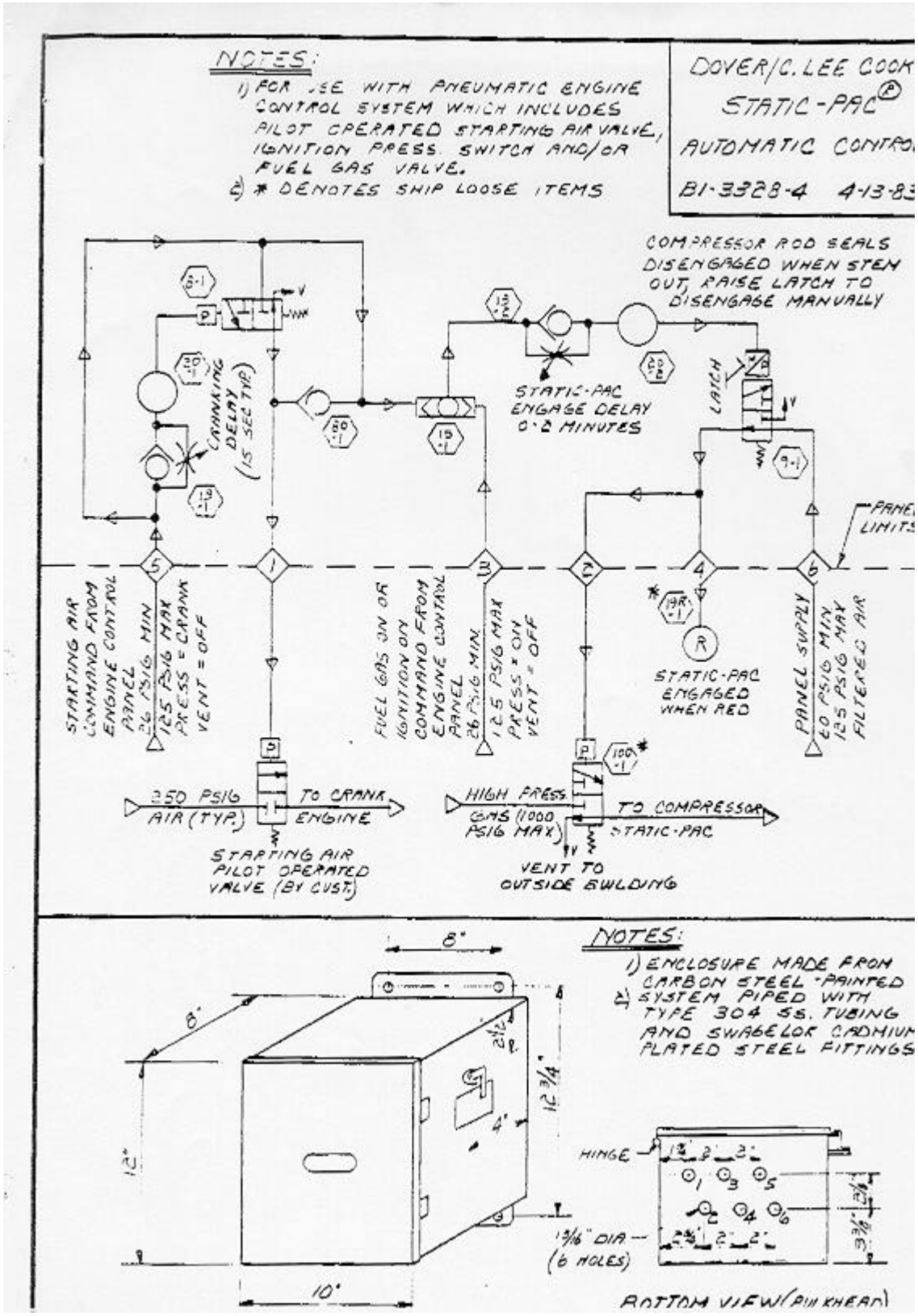
NOTES:
1) FOR USE WITH PNEUMATIC ENGINE CONTROL SYSTEM WHICH INCLUDES PILOT OPERATED STARTING AIR VALVE, IGNITION PRESS. SWITCH AND/OR FUEL GAS VALVE.
2) * DENOTES SHIP LOOSE ITEMS
DOVER/C. LEE COOK
STATIC-PAC®
AUTOMATIC CONTRO
B1-3328-4 4-13-83
COMPRESSOR ROD SEALS DISENGAGED WHEN STEM OUT, RAISE LATCH TO DISENGAGE MANUALLY
CRANKING DELAY (15 SEC TYP)
STATIC-PAC ENGAGE DELAY 0-2 MINUTES
LATCH
PANEL LIMITS
STARTING AIR COMMAND FROM ENGINE CONTROL PANEL 26 PSIG MIN 125 PSIG MAX PRESS = CRANK VENT = OFF
FUEL GAS ON OR IGNITION ON COMMAND FROM ENGINE CONTROL PANEL 26 PSIG MIN 125 PSIG MAX PRESS = ON VENT = OFF
STATIC-PAC ENGAGED WHEN RED
PANEL SUPPLY 60 PSIG MIN 125 PSIG MAX FILTERED AIR
250 PSIG AIR (TYP.)
TO CRANK ENGINE
HIGH PRESS. GAS (1000 PSIG MAX)
TO COMPRESSOR STATIC-PAC
STARTING AIR PILOT OPERATED VALVE (BY CUST.)
VENT TO OUTSIDE BUILDING
NOTES:
1) ENCLOSURE MADE FROM CARBON STEEL - PAINTED
2) SYSTEM PIPED WITH TYPE 304 SS. TUBING AND SWAGELOK CADMIUM PLATED STEEL FITTINGS
8"
6"
12"
10"
12 3/4"
4"
HINGE
13/16" DIA (6 HOLES)
BOTTOM VIEW (PLUMBING)