SRI/USEPA-GHG-VR-26
September 2004

Environmental Technology Verification Report

Electric Power and Heat Generation Using UTC Fuel Cells' PC25C Power Plant and Anaerobic Digester Gas

Prepared by:

Greenhouse Gas Technology Center
Southern Research Institute

Under a Cooperative Agreement With
U.S. Environmental Protection Agency

and

Under Agreement With
New York State Energy Research and Development Authority

EPA REVIEW NOTICE

This report has been peer and administratively reviewed by the U.S. Environmental Protection Agency, and approved for publication. Mention of trade names or commercial products does not constitute endorsement or recommendation for use.

THE ENVIRONMENTAL TECHNOLOGY VERIFICATION PROGRAM

U.S. Environmental Protection Agency

ETV Joint Verification Statement

TECHNOLOGY TYPE:	Phosphoric Acid Fuel Cell Combined With Heat Recovery System
APPLICATION:	Distributed Electrical Power and Heat Generation Using UTC Fuel Cells' PC25C Power Plant and Anaerobic Digester Gas
TECHNOLOGY NAME:	PC25C Fuel Cell Power Plant – Model C
COMPANY:	UTC Fuel Cells, LLC
ADDRESS:	195 Governors Highway South Windsor, Connecticut 06074
WEB ADDRESS:	www.utcfuelcells.com

The U.S. Environmental Protection Agency (EPA) has created the Environmental Technology Verification (ETV) program to facilitate the deployment of innovative or improved environmental technologies through performance verification and dissemination of information. The goal of the ETV program is to further environmental protection by accelerating the acceptance and use of improved and cost-effective technologies. ETV seeks to achieve this goal by providing high-quality, peer-reviewed data on technology performance to those involved in the purchase, design, distribution, financing, permitting, and use of environmental technologies.

ETV works in partnership with recognized standards and testing organizations, stakeholder groups that consist of buyers, vendor organizations, and permitters, and with the full participation of individual technology developers. The program evaluates the performance of technologies by developing test plans that are responsive to the needs of stakeholders, conducting field or laboratory tests, collecting and analyzing data, and preparing peer-reviewed reports. All evaluations are conducted in accordance with rigorous quality assurance protocols to ensure that data of known and adequate quality are generated and that the results are defensible.

The Greenhouse Gas Technology Center (GHG Center), one of six verification organizations under the ETV program, is operated by Southern Research Institute in cooperation with EPA's National Risk Management Research Laboratory. A technology of interest to GHG Center stakeholders is the use of fuel cells as distributed generation (DG) sources. DG refers to power-generation equipment that provides electric power at a site much closer to customers than central station generation. An added environmental benefit of some DG technologies is the ability to fuel these systems with renewable energy sources such as anaerobic digester gas (ADG) or landfill gas. These gases, if released to atmosphere, contribute millions of tons of methane emissions annually in the U.S. Cost-effective technologies are available that can significantly reduce these emissions by recovering methane and using it as an energy source. Recently, ADG production from waste management facilities has become a promising alternative for fueling DG technologies. The recovered methane can fuel power generators to produce electricity, heat, and hot water. The improved efficiency of combined heat and power DG systems and the ability to use renewable fuels make them a viable alternative to traditional power generation technologies.

The GHG Center collaborated with the New York State Energy Research and Development Authority (NYSERDA) to evaluate the performance of the PC25C Model C Fuel Cell Power Plant (PC25C) offered by United Technologies Corporation Fuel Cells (UTC). The PC25C is a phosphoric acid fuel cell capable of producing nominal 200 kW of electrical power with the potential to produce an additional 205 kW of heat. The PC25C selected for this verification is owned and operated by the New York Power Authority (NYPA). It is located at the Red Hook Water Pollution Control Plant (WPCP) operated by the New York City Department of Environmental Protection. The system is fueled by ADG produced at the Red Hook facility.

TECHNOLOGY DESCRIPTION

The following technology description is based on information provided by UTC and NYPA and does not represent verified information. The PC25C is a phosphoric acid fuel cell (PAFC) that generates electricity through an electrochemical process in which the energy stored in a fuel is converted into alternating current (AC) electricity. The unit has a rated generating capacity of nominal 200 kW at 480 volts. System specifications state that electrical efficiency of the PC25C averages 35 to 40 percent, but total system efficiency can rise to about 80 percent if the waste heat is reused in a cogeneration system. The PC25C system consists of three major components including: (1) the gas processing unit (GPU), (2) the power module, and (3) the cooling module.

Prior to use as a fuel, the raw ADG is processed using an integrated GPU. The GPU is manufactured by US Filter and specifically designed for integration with the PC25C. The GPU is designed primarily to remove hydrogen sulfide (H_2S) from the ADG, as its presence is damaging to the PC25C. The GPU will also remove other potentially harmful ADG components such as other sulfur species and volatile organic compounds. A separate verification statement and report titled *Environmental Technology Verification Report – UTC PC25C Fuel Cell Power Plant – Gas Processing Unit Performance for Anaerobic Digester Gas* provides results of GPU performance testing.

The PC25C Power Module consists of three components including: (1) the fuel processor, (2) the fuel cell stack, and (3) the power conditioner. The PC25C uses catalytic steam reforming (CSR) to produce a reformed fuel (reformate) rich in H_2 from the ADG. According to UTC, the CSR reforming process yields higher H_2 per unit of fuel compared to other reforming processes, boosting fuel quality and fuel cell efficiency. The fuel cell stack uses a phosphoric acid electrolyte to generate direct current (DC) power from reformate. After the fuel cell stack, the spent reformed fuel sent to the CSR burner to provide heat for the endothermic reforming process. The reformer exhaust is combined in the condenser along with the spent air from the fuel cell stack. There, water is recovered and sent back to the cooling water loop,

and uncondensed water vapor is exhausted to the atmosphere. A power conditioner converts the DC power to AC using an inverter.

Two PC25C systems are installed at the Red Hook plant, providing a potential 400 kW of power to offset power purchased from the utility grid. The PC25C systems will also offset a portion of the heat provided to Red Hook by a large neighboring cogeneration facility. Both fuel cells are configured to use either natural gas or ADG produced at the site as fuel. ADG is the primary fuel under normal site operations with natural gas used only during fuel cell startup or as a backup fuel during digester upset conditions. When the fuel cells are not in service or excess ADG is produced, it is combusted in an enclosed flare.

VERIFICATION DESCRIPTION

Testing was conducted from May 19 through June 19, 2004. The verification included a series of controlled test periods in which the GHG Center intentionally modulated the unit to produce electricity at nominal power output commands of 200, 150, and 100 kW. Three replicate test runs were conducted at each point. The controlled test periods were followed by 30 days of continuous monitoring to verify electric power production, heat recovery, and power quality performance over an extended period. The classes of verification parameters evaluated were:

- **Heat and Power Production Performance**
- **Emissions Performance (NO_x, CO, THC, CH_4, and CO_2)**
- **Power Quality Performance**

Evaluation of heat and power production performance included verification of power output, heat production, electrical efficiency, thermal efficiency, and total system efficiency. Electrical efficiency was determined according to the ASME Performance Test Code for Fuel Cells (ASME PTC-50). Tests consisted of direct measurements of fuel flow rate, fuel lower heating value (LHV), and power output. Heat recovery rate and thermal efficiency were determined according to ANSI/ASHRAE test methods and consisted of direct measurement of heat-transfer fluid flow rate and differential temperatures. Ambient temperature, barometric pressure, and relative humidity measurements were also collected to characterize the condition of the combustion air used by the fuel cell. All measurements were recorded as one-minute averages.

The evaluation of emissions performance occurred simultaneously with efficiency testing. Pollutant concentration and emission rate measurements for nitrogen oxides (NO_X), carbon monoxide (CO), total hydrocarbons (THC), methane (CH_4), and carbon dioxide (CO_2) were conducted in the PC25C exhaust stack. All test procedures used in the verification were U.S. EPA reference methods recorded in the Code of Federal Regulations (CFR). Pollutant emissions are reported as concentrations in parts per million by volume, dry (ppmv) corrected to 15-percent oxygen (O_2), and as mass per unit time (lb/hr). The mass emission rates are also normalized to power output and reported as pounds per megawatt hour (lb/MWh).

Annual NO_X and CO_2 emissions reductions resulting from the use of the PC25C were estimated by comparing measured emission rates with corresponding emission rates for the baseline scenario for the Red Hook plant. The baseline scenario consists of emissions associated with generation of an amount of power by utilities equivalent to that produced by the fuel cell (based on average regional grid emission factors for New York State) plus estimated emissions from combustion of an amount of ADG using the flare equivalent to that consumed by the fuel cell.

Electrical power quality parameters, including electrical frequency and voltage output, were measured during the controlled and 30-day extended tests. Current and voltage total harmonic distortions (THD) and power factors were also monitored to characterize the quality of electricity supplied to the end user.

The guidelines listed in "The Institute of Electrical and Electronics Engineers' (IEEE) Recommended Practices and Requirements for Harmonic Control in Electrical Power Systems" were used to perform power quality testing.

Quality Assurance (QA) oversight of the verification testing was provided following specifications in the ETV Quality Management Plan (QMP). The GHG Center's QA Manager conducted an audit of data quality on at least 10 percent of the data generated during this verification and a review of this report. Data review and validation was conducted at three levels including the field team leader (for data generated by subcontractors), the project manager, and the QA manager. Through these activities, the QA manager has concluded that the data quality objectives specified in the Test and Quality Assurance Plan were met with the exception of the efficiency determinations. Due to a conservative uncertainty estimate in the heat input determination, the efficiency DQOs were slightly exceeded.

VERIFICATION OF PERFORMANCE

Heat and Power Production Performance

PC25C HEAT AND POWER PRODUCTION					
Test Condition (Power Command)	**Electrical Power Generation**		**Heat Production Performance**		**Potential CHP System Efficiency (%)**
	Power Delivered (kW)	**Efficiency (%)**	**Heat Production (10^3Btu/hr)**	**Potential Thermal Efficiency (%)**	
200 kW	193.1	36.8	1,018	56.9	93.8
150 kW	152.3	38.2	700	51.5	89.8
100 kW	101.5	37.4	478	51.7	89.0

- Electrical efficiency averaged approximately 37.5 percent over the range of PC25C operation.

- The Red Hook WPCP does not have demand for the heat generated by the PC25C. All heat produced by the fuel cell is removed through the unit's cooling module loop. The heat production rates summarized in the table represent the total heat removed at the cooling module. Based on these heat removal rates, potential thermal efficiency at full load was 56.9 percent and potential combined heat and power system efficiency averaged 93.8 percent.

- During the 30-day monitoring period, the PC25C operated on ADG for a total of 165 hours. During this time, a total of 27,748 kWhr electricity was generated at an average rate of 166 kW, and 120.4 million Btu (35,296 kWh) of heat was removed through the cooling module at an average heat recovery rate of 730 MBtu/hr. Numerous power upsets at the Red Hook facility during the verification period reduced the amount of PC25C run time during the verification period. Testing conducted by the GHG Center on a different PC25C showed an availability of 97 percent.

Emissions Performance

PC25C EMISSIONS (lb/MWh)					
Power Command	**NO_X**	**CO**	**THC**	**CH_4**	**CO_2**
200 kW	0.013	0.029	0.78	0.80	1,437
150 kW	0.013	0.051	1.36	1.40	1,314
100 kW	0.013	0.078	1.37	1.19	1,451

- NO_X emissions were consistent at all three loads tested and averaged 0.013 lb/MWh. CO emissions averaged 0.029 lb/MWh at full load and increased slightly as power output was reduced.

- THC emissions ranged from 0.78 lb/MWh at full load to 1.37 lb/MWh at the 100 kW power demand. The PC25C ventilation system draws ambient air through the exhaust duct and also into the fuel cell stack. Background hydrocarbons in the room air were measured and used to correct the measured exhaust stack emissions. Even after this correction for background hydrocarbons, reported THC levels are much higher than has been reported for three other PC25C tests. Further information is available in the Verification Report.

- Compared to the baseline emissions scenario (regional grid emission factors plus flare emissions), annual NO_X emission reductions are estimated to be 0.45 tons when operating the PC25C for an average 165 hours per month (as observed during the verification period). At an estimated PC25C availability rate of 97 percent (based on previous testing by the GHG Center), estimated annual NO_X emission reductions increase to 1.82 tons. For CO_2, estimated annual emission reductions at the operating conditions observed during the period are 337 tons. At the expected 97 percent availability, annual CO_2 emission reductions increase to an estimated 1,346 tons.

Power Quality Performance

- Average electrical frequency was 60.00 Hz and average voltage output was 487.6 volts.
- During the first half of the verification period, power factor remained relatively constant at 99.9 percent. However, power factor reversed to approximately -87 percent following a long period of downtime. The cause of this reversal is not clear.
- The average current THD was 12.5 percent and the average voltage THD was 2.3 percent. Current THD exceeded the IEEE recommended threshold of 5 percent on several occasions.

Details on the verification test design, measurement test procedures, and Quality Assurance/Quality Control (QA/QC) procedures can be found in the test plan titled *Test and Quality Assurance Plan – Electric Power and Heat Production Using the UTC Fuel Cells PC25C Power Plant and Anaerobic Digester Gas* (SRI 2004). Detailed results of the verification are presented in the final report titled *Environmental Technology Verification Report for Electric Power and Heat Production Using the UTC Fuel Cells PC25C Power Plant and Anaerobic Digester Gas* (SRI 2004). Both can be downloaded from the GHG Center's web-site (www.sri-rtp.com) or the ETV Program web-site (www.epa.gov/etv).

Signed by Lawrence W. Reiter, Ph.D. 9/22/04

Lawrence W. Reiter, Ph.D.
Acting Director
National Risk Management Research Laboratory
Office of Research and Development

Signed by Stephen D. Piccot 9/13/04

Stephen D. Piccot
Director
Greenhouse Gas Technology Center
Southern Research Institute

Notice: GHG Center verifications are based on an evaluation of technology performance under specific, predetermined criteria and the appropriate quality assurance procedures. The EPA and Southern Research Institute make no expressed or implied warranties as to the performance of the technology and do not certify that a technology will always operate at the levels verified. The end user is solely responsible for complying with any and all applicable Federal, State, and Local requirements. Mention of commercial product names does not imply endorsement or recommendation.

EPA REVIEW NOTICE

This report has been peer and administratively reviewed by the U.S. Environmental Protection Agency, and approved for publication. Mention of trade names or commercial products does not constitute endorsement or recommendation for use.

SRI/USEPA-GHG-VR-26
September 2004

Greenhouse Gas Technology Center

A U.S. EPA Sponsored Environmental Technology Verification (ETV) Organization

Environmental Technology Verification Report

Electric Power and Heat Generation Using the UTC Fuel Cells' PC25C Power Plant and Anaerobic Digester Gas

Prepared By:
Greenhouse Gas Technology Center
Southern Research Institute
PO Box 13825
Research Triangle Park, NC 27709 USA
Telephone: 919/806-3456

Under EPA Cooperative Agreement R-82947801
and NYSERDA Agreement 7009

U.S. Environmental Protection Agency
Office of Research and Development
National Risk Management Research Laboratory
Air Pollution Prevention and Control Division
Research Triangle Park, NC 27711 USA

EPA Project Officer: David A. Kirchgessner
NYSERDA Project Officer: Richard Drake

TABLE OF CONTENTS

Page

LIST OF FIGURES ..... **iii**
LIST OF TABLES ..... **iii**
ACKNOWLEDGMENTS ..... **iv**
ACRONYMS AND ABBREVIATIONS ..... **v**

1.0 INTRODUCTION **1-1**
1.1. BACKGROUND 1-1
1.2. PC25C FUEL CELL TECHNOLOGY DESCRIPTION 1-2
1.3. RED HOOK WPCP FACILITY AND SYSTEM INTEGRATION 1-4
1.4. PERFORMANCE VERIFICATION OVERVIEW 1-6
1.4.1. Heat and Power Production Performance 1-7
1.4.2. Measurement Equipment 1-8
1.4.3. Power Quality Performance 1-10
1.4.4. Emissions Performance 1-11
1.4.5. Estimated Annual Emission Reductions 1-12

2.0 VERIFICATION RESULTS **2-1**
2.1. OVERVIEW 2-1
2.2. HEAT AND POWER PRODUCTION PERFORMANCE 2-2
2.2.1. Electrical Power Output, Heat Production, and Efficiency During Controlled Tests 2-2
2.2.2. Electrical and Thermal Energy Production and Efficiency During the Extended Test Period 2-6
2.3. POWER QUALITY PERFORMANCE 2-8
2.4. EMISSIONS PERFORMANCE 2-10
2.4.1. PC25C Exhaust Emissions 2-10
2.4.2. Estimation of Annual NO_X and CO_2 Emission Reductions 2-12

3.0 DATA QUALITY ASSESSMENT **3-1**
3.1. DATA QUALITY OBJECTIVES 3-1
3.2. RECONCILIATION OF DQOs AND DQIs 3-2
3.2.1. Power Output 3-5
3.2.2. Electrical Efficiency 3-6
3.2.2.1. PTC-50 Requirements for Electrical Efficiency Determination 3-7
3.2.2.2. Ambient Measurements 3-7
3.2.2.3. Fuel Flow Rate 3-8
3.2.2.4. Fuel Lower Heating Value 3-8
3.2.3. Heat Production and Thermal Efficiency 3-8
3.2.4. Total Efficiency 3-9
3.2.5. Exhaust Stack Emission Measurements 3-9
3.2.5.1. NO_X, CO, THC, CO_2, and O_2 Concentrations 3-10
3.2.5.2. CH_4 Concentrations 3-11
3.2.5.3. Exhaust Gas Volumetric Flow Rate 3-11

4.0 TECHNICAL AND PERFORMANCE DATA SUPPLIED BY UTC FUEL CELLS **4-1**

5.0 REFERENCES **5-1**

•

LIST OF FIGURES

		Page
Figure 1-1	PC25C System Schematic	1-3
Figure 1-2	PC25C Integration Schematic for Red Hook WPCP	1-5
Figure 1-3	Schematic of Measurement System	1-9
Figure 2-1	Power and Heat Production During the Controlled Test Periods	2-3
Figure 2-2	Power and Heat Production During the Extended Monitoring Period	2-7
Figure 2-3	PC25C Efficiency During the Extended Monitoring Period	2-7
Figure 2-4	PC25C Voltage and Frequency During Extended Monitoring Period	2-8
Figure 2-5	PC25C Power Factor During Extended Monitoring Period	2-8
Figure 2-6	PC25C Current and Voltage THD During Extended Monitoring Period	2-9

LIST OF TABLES

		Page
Table 1-1	Controlled and Extended Test Periods	1-7
Table 1-2	Summary of Emissions Testing Methods	1-12
Table 2-1	PC25C Heat and Power Production Performance	2-4
Table 2-2	PC25C Heat Recovery Unit and Cooling Module Operating Conditions	2-5
Table 2-3	PC25C Heat Input Determinations	2-6
Table 2-4	Summary of PC25C Power Quality	2-9
Table 2-5	PC25C Emissions During Controlled Periods	2-11
Table 2-6	Estimated Annual PC25C Emission Reductions	2-13
Table 3-1	Verification Parameter Data Quality Objectives	3-1
Table 3-2	Summary of Data Quality Goals and Results	3-3
Table 3-3	Results of Additional QA/QC Checks	3-6
Table 3-4	Variability Observed in Operating Conditions	3-7
Table 3-6	Summary of Emissions Testing QA/QC Checks	3-10

ACKNOWLEDGMENTS

The Greenhouse Gas Technology Center wishes to thank NYSERDA, especially Richard Drake and Mark Torpey, for supporting this verification and reviewing and providing input on the testing strategy and this Verification Report. Thanks are also extended to the New York Power Authority (NYPA), especially Joe Maki, for his input supporting the verification and his assistance with coordinating field activities. Finally, thanks go out to New York City's Environmental Protection staff at the Red Hook Water Pollution Control Plant for hosting the test.

ACRONYMS AND ABBREVIATIONS

AC	alternating current
ADQ	Audit of Data Quality
Amp	amperes
ANSI	American National Standards Institute
ASHRAE	American Society of Heating, Refrigerating and Air-Conditioning Engineers, Inc.
ASME	American Society of Mechanical Engineers
Btu	British thermal units
Btu/hr	British thermal units per hour
Btu/min	British thermal units per minute
Btu/scf	British thermal units per standard cubic feet
CAR	Corrective Action Report
CSR	catalytic steam reforming
CH_4	methane
CHP	combined heat and power
CO	carbon monoxide
CO_2	carbon dioxide
CT	current transformer
DAS	data acquisition system
DG	distributed generation
DOE	U.S. Department of Energy
DQI	data quality indicator
DQO	data quality objective
dscf/10^6Btu	dry standard cubic feet per million British thermal units
EPA	Environmental Protection Agency
ETV	Environmental Technology Verification
FID	flame ionization detector
GC	gas chromatograph
GHG Center	Greenhouse Gas Technology Center
GPM	gallons per minute
hr	hour
Hz	hertz
IEEE	Institute of Electrical and Electronics Engineers
ISO	International Standards Organization
kW	kilowatts
kWh	kilowatt hours
lb	pounds
lb/dscf	pounds per dry standard cubic foot
lb/hr	pounds per hour
lb/kWh	pounds per kilowatt-hour
lb/MWh	pounds per megawatt-hour
LHV	lower heating value
10^3Btu/hr	thousand British thermal units per hour
MW	megawatt
MWh	megawatt-hour
10^6Btu/hr	million British thermal units per hour

(continued)

ACRONYMS/ABBREVIATIONS
(continued)

NDIR	nondispersive infrared
NIST	National Institute of Standards and Technology
NO_X	nitrogen oxides
NSPS	New Source Performance Standards
NYPA	New York Power Authority
NYSERDA	New York State Energy Research and Development Authority
O_2	oxygen
PEA	Performance Evaluation Audit
ppmv	parts per million volume
ppm	parts per million volume, dry
psia	pounds per square inch, absolute
psig	pounds per square inch, gauge
QA/QC	Quality Assurance/Quality Control
QMP	Quality Management Plan
RH	relative humidity
rms	root mean square
RTD	resistance temperature detector
scf	standard cubic feet
scfh	standard cubic feet per hour
scfm	standard cubic feet per minute
Southern	Southern Research Institute
TQAP	Test and Quality Assurance Plan
THCs	total hydrocarbons
THD	total harmonic distortion
ton/yr	tons per year
TSA	technical systems audit
VAC	volts alternating current
VAR	volt-ampere reactive

1.0 INTRODUCTION

1.1. BACKGROUND

The U.S. Environmental Protection Agency's Office of Research and Development operates the Environmental Technology Verification (ETV) program to facilitate the deployment of innovative technologies through performance verification and information dissemination. The goal of ETV is to further environmental protection by accelerating the acceptance and use of improved and innovative environmental technologies. Congress funds ETV in response to the belief that there are many viable environmental technologies that are not being used for the lack of credible third-party performance data. With performance data developed under this program, technology buyers, financiers, and permitters in the United States and abroad will be better equipped to make informed decisions regarding environmental technology purchase and use.

The Greenhouse Gas Technology Center (GHG Center) is one of six verification organizations operating under the ETV program. The GHG Center is managed by EPA's partner verification organization, Southern Research Institute (Southern), which conducts verification testing of promising greenhouse gas mitigation and monitoring technologies. The GHG Center's verification process consists of developing verification protocols, conducting field tests, collecting and interpreting field and other data, obtaining independent peer-reviewed input, and reporting findings. Performance evaluations are conducted according to externally reviewed verification Test and Quality Assurance Plans and established protocols for quality assurance.

The GHG Center is guided by volunteer groups of stakeholders, who direct the GHG Center regarding which technologies are most appropriate for testing, help disseminate results, and review test plans and technology verification reports. A technology area of interest to some GHG Center stakeholders is distributed electrical power generation (DG), particularly with combined heat and power (CHP) capability. DG refers to electricity generation equipment, typically under 1,000 kilowatts (kW), that provides electric power at a customer's site (as opposed to central station generation). A DG unit can be connected directly to the customer or to a utility's transmission and distribution system. Examples of technologies available for DG include gas turbine generators, internal combustion engine generators (gas, diesel, other), photovoltaics, wind turbines, fuel cells, and microturbines. DG technologies provide customers one or more of the following main services: standby generation (i.e., emergency backup power), peak shaving generation (during high-demand periods), base-load generation (constant generation), and CHP generation. An added environmental benefit of some DG technologies is the ability to fuel these systems with renewable energy sources such as anaerobic digester gas (ADG) or landfill gas. These gases, when released to atmosphere, contribute millions of tons of methane emissions annually in the U.S. Cost-effective technologies are available that significantly reduce these emissions by recovering methane and using it as an energy source.

The GHG Center and the New York State Energy Research and Development Authority (NYSERDA) have agreed to collaborate and share the cost of verifying several new DG technologies located throughout the State of New York. One such technology is the PC25C Fuel Cell Power Plant (PC25C) offered by United Technologies Corporation Fuel Cells (UTC). The PC25C is a phosphoric acid fuel cell capable of producing nominal 200 kW of electrical power with the potential to produce an additional 205 kW of heat. The PC25C selected for this verification is owned and operated by the New York Power Authority (NYPA) and fueled by ADG produced at a water pollution control plant (WPCP). The PC25C verified here includes a gas processing unit (GPU) that treats the ADG prior to use as a fuel. Under a

partnership between NYSERDA, NYPA, and others, a total of eight fully interconnected PC25C systems will be installed at four WPCPs in Brooklyn, New York. Each system will be fueled with ADG generated from anaerobic digestion of sewage sludge. The PC25C system selected for this verification is located at the Red Hook WPCP operated by the New York City Department of Environmental Protection.

The GHG Center evaluated the performance of the PC25C CHP system by conducting field tests over a 30-day verification period (May 19 – June 19, 2004). These tests were planned and executed by the GHG Center to independently verify the electricity generation rate, thermal energy recovery rate, electrical power quality, energy efficiency, emissions, and greenhouse gas emission reductions for the fuel cell operating at the Red Hook WPCP. Details on the verification test design, measurement test procedures, and Quality Assurance/Quality Control (QA/QC) procedures can be found in the document titled *Test and Quality Assurance Plan – Electric Power and Heat Generation Using the UTC PC25C Fuel Cell Power Plant and Anaerobic Digester Gas* [1]. It can be downloaded from the GHG Center's web-site (www.sri-rtp.com) or the ETV Program web-site (www.epa.gov/etv). This Test and Quality Assurance Plan (TQAP) describes the rationale for the experimental design, the testing and instrument calibration procedures planned for use, and specific QA/QC goals and procedures. The TQAP was reviewed and revised based on comments received from NYSRDA, NYPA, and the EPA Quality Assurance Team. The TQAP meets the requirements of the GHG Center's Quality Management Plan (QMP) and satisfies the ETV QMP requirements.

The remainder of Section 1.0 describes the PC25C CHP system technology and test facility and outlines the performance verification procedures that were followed. Section 2.0 presents test results, and Section 3.0 assesses the quality of the data obtained. Section 4.0, submitted by UTC Fuel Cells, presents additional information regarding the CHP system. Information provided in Section 4.0 has not been independently verified by the GHG Center.

1.2. PC25C FUEL CELL TECHNOLOGY DESCRIPTION

The PC25C fuel cell generates electricity through an electrochemical process in which the energy stored in a fuel is converted into alternating current (AC) electricity. The unit has a rated generating capacity of nominal 200 kW at 480 volts. According to UTC, electrical efficiency of the PC25C averages 35 to 40 percent, but total system efficiency can rise to about 80 percent if the waste heat is reused in a cogeneration system. Figure 1-1 provides a simple schematic of the PC25C system and its three major components including: (1) the GPU, (2) the power module, (3) the cooling module.

Gas Processing Unit

Prior to use as a fuel, the raw ADG is processed using an integrated GPU. The GPU used here is manufactured by US Filter/Westates and specifically designed for integration with the PC25C. The GPU is electrically integrated with the PC25C such that the fuel cell provides power and startup/shutdown control to the GPU. The GPU includes a variable speed gas blower that is used to pressurize low pressure ADG fuel supply as needed to overcome GPU pressure drop. PC25C fuel pressure sensors and electronics are used to control GPU blower speed. The GPU is designed primarily to remove hydrogen sulfide (H_2S) from the ADG, as its presence is damaging to the PC25C. The GPU will also remove other potentially harmful ADG components such as other sulfur species and volatile organic compounds.

The GPU consists of three major components including a coalescing filter, activated carbon beds, and the blower. The coalescing filter removes water vapor and entrained particulates from the raw gas. The GPU is equipped with a drip leg to remove condensed water from the fuel supply line. Collected and condensed water is piped back into the waste water treatment system at the plant.

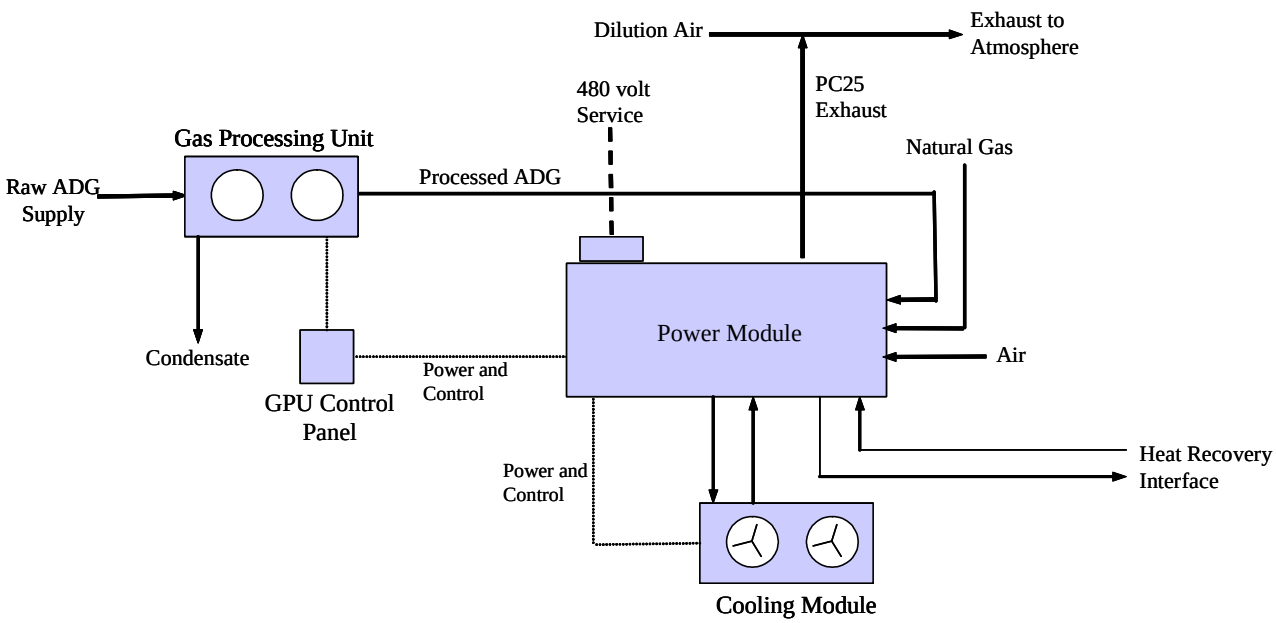

Figure 1-1. PC25C System Schematic

The dry ADG is then directed to two 1,200 lb carbon beds in series to capture H_2S and other harmful contaminants. Each bed is designed to operate for approximately six months with ADG containing up to 200 ppm H_2S. The system is configured with the capability to operate using a single bed when a bed needs to be changed out. Periodic monitoring of the H_2S levels in the raw and processed ADG is conducted manually by system operators. Additionally, periodic sampling of the carbon beds is conducted to evaluate the condition of the carbon.

Power Module

The PC25C Power Module consists of three components including: (1) the fuel reformer, (2) the fuel cell stack, and (3) the power conditioner. A reformed fuel (reformate) rich in H_2 is derived from the processed ADG in the reformer via catalytic steam reforming (CSR). According to UTC, the CSR reforming process yields higher H_2 per unit of fuel compared to other reforming processes, boosting fuel quality and fuel cell efficiency. This occurs because all of the O_2 needed to oxidize the carbon compounds is provided by steam, which also contributes to the H_2 content of the reformate. The reformed fuel is then directed to the fuel cell stack.

The fuel cell stack uses an electrolyte [phosphoric acid (H_3PO_4)] which can approach concentrations of 100 percent. The electrodes are made of carbon paper coated with a finely dispersed platinum catalyst. The catalyst strips electrons off the hydrogen-rich fuel at the anode. Positively charged hydrogen ions then migrate through the electrolyte from the anode to the cathode. Electrons generated at the anode cannot pass through this electrolyte and they travel through an external circuit, providing DC power, and return to the cathode. The electrons, hydrogen ions, and oxygen form water, which is discharged from the cell. The platinum catalyst at the electrodes speeds the reactions. Individual fuel cells can be combined into a fuel cell "stack". The number of fuel cells in the stack determines the total voltage output. This set of reactions in the fuel cell produces electricity and by-product heat. The reactions are:

Anode Reaction:	$2\ H_2 \Rightarrow 4\ H^+ + 4\ e^-$
Cathode Reaction:	$O_2(g) + 4\ H^+ + 4\ e^- \Rightarrow 2\ H_2O$
Overall Cell Reaction:	$2\ H_2 + O_2 \Rightarrow 2\ H_2O$

The cell uses air directly as an oxidizing agent and can operate with impure hydrogen produced by reforming other fuels. The CO_2 formed as a byproduct of the reform process passes through the cell without affecting its performance. After the fuel cell stack, the spent reformed fuel is sent to the CSR burner to provide heat for the endothermic reforming process. The reformer exhaust is combined in the condenser along with the spent air from the fuel cell stack. There, water is recovered and sent back to the cooling water loop, and uncondensed water vapor is exhausted to the atmosphere. An induced draft fan draws a constant stream of dilution air through the exhaust system to maintain proper draft on the power module. In the power conditioner, the DC electricity produced by the fuel cell stack is converted to AC power using an inverter.

Cooling Module

The cooling module is a cooling loop that is isolated from the heat recovery system. The cooling module is used to remove unused heat generated by the Power Module and to maintain optimum internal operating temperatures. A variable speed circulation pump controls the flow of fluid through the cooling module loop in response to several temperature sensors within the PC25C. When heat recovery rates are low, additional cooling is provided by the cooling module. Heat is removed through a radiator type air heat exchanger.

1.3. RED HOOK WPCP FACILITY AND SYSTEM INTEGRATION

The Red Hook WPCP is a 60-million gallons per day secondary wastewater treatment facility located at 63 Flushing Avenue in Brooklyn, New York. Two PC25C fuel cell systems were installed at the Red Hook WPCP in May of 2003 to provide on-site generation of power and hot water. One of the PC25C systems (ID No. 9274) was selected for this verification test.

The Red Hook facility purchases power from the local utility (Consolidated Edison) to meet its electrical demand. Facility heat demand for process heat, space heating, and hot water production varies by season, but averages around 11.0 x 10^6Btu/hr in winter months and 7.20 x 10^6Btu/hr in summer months. Heat demand is met under normal site operations using low-pressure steam supplied by an adjacent cogeneration facility. The cogeneration facility (owned and operated by Cogeneration Technologies, Inc.) is a 286 MW combined-cycle gas-fired turbine and steam turbine equipped with a heat recovery steam generator capable of producing 800,000 lb/hr steam. A small fraction of the steam produced at the facility is directed to the Red Hook WPCP to meet the process heat, space heating, and hot water production demands. Total annual steam flow to the Red Hook site has averaged approximately 54.4 million pounds per year during the past three years, representing less than one percent of the cogeneration facility's steam generation capacity.

The Red Hook WPCP also has three gas- or oil-fired boilers that can meet plant heat demand should the cogeneration facility not provide steam to the site. The boilers are identical York-Shipley Series 576 Steam Pak Boilers. Each 350 horsepower unit has a rated heat input of 14.7 x 10^6Btu/hr and a heat output rate of 11.7 x 10^6Btu/hr. Steam output is rated at 12,075 lb/hr. The boilers are rarely needed at the facility because steam availability from the cogeneration facility is greater than 98 percent.

Figure 1-2 provides a simplified schematic of fuel cell integration at the Red Hook site. The two PC25C systems can provide a total of 400 kW of power to offset power purchased from ConEd. The PC25C systems can also offset a small portion of the heat provided by the cogeneration facility (approximately 1.6 10^6Btu/hr, or about 14 percent of the average cold weather demand). Both fuel cells are configured to use either natural gas or ADG produced at the site as fuel. ADG is the primary fuel under normal site operations with natural gas used only during fuel cell startup or as a backup fuel during digester upset conditions.

The ADG is produced at the Red Hook facility using a series of anaerobic sludge digesters. The ADG is typically composed of 60 to 65 percent methane with a lower heating value (LHV) of 550 to 650 Btu/scf. ADG composition data collected at the site indicate that methane concentrations as low as 40 percent are rare, but possible. The system is designed to switch to natural gas fuel whenever methane concentrations are less than 50 percent, or ADG pressure is less than 3 inches water column. Gas production rates at the facility will also vary depending on daily plant wastewater flow rates and ambient temperatures. Peak production rates during the summer months can approach 45,000 cubic feet per hour (cfh). All ADG is combusted in a single enclosed flare when the fuel cells are not in use. The flare is a Whessoe-Varic Model WV 249-15-4-24-6 ADG ground flare which was installed in 1988. Approximately 6,500 cfh of the ADG is diverted from the flare and used as fuel with the two PC25C fuel cells in operation. Site operators report that ADG production rates at the plant normally exceed the 6,500 cfh needed to operate both fuel cells at full load at all times of normal site operations. ADG produced in excess of 6,500 cfh is combusted in the flare.

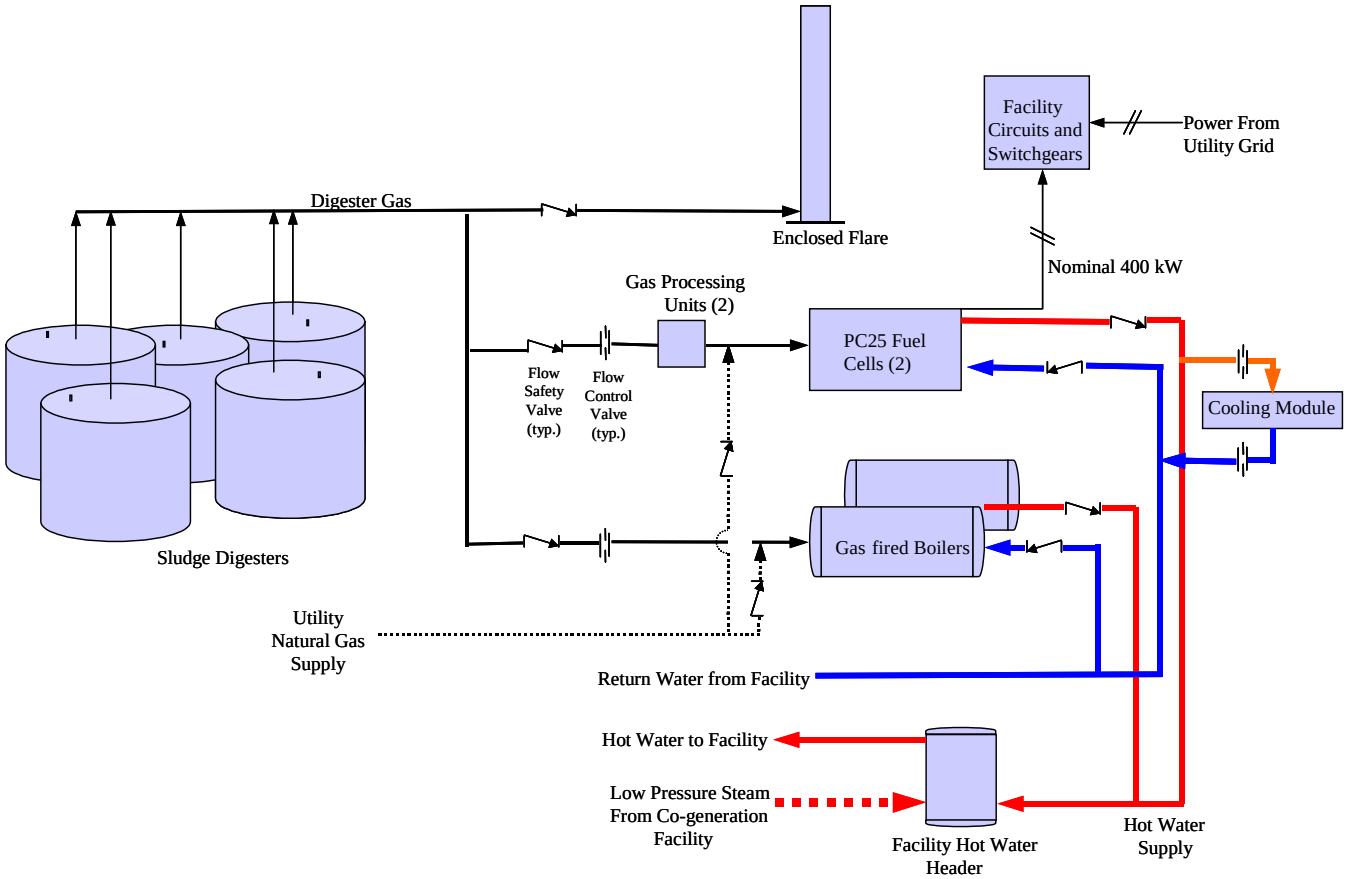

Figure 1-2. PC25C Integration Schematic for Red Hook WPCP

1.4. PERFORMANCE VERIFICATION OVERVIEW

This verification test was designed to evaluate the performance of the PC25C CHP system—not the overall system integration or specific management strategy. The TQAP specified a series of controlled test periods in which the unit was intentionally modulated to produce electricity at nominal power output commands of 200, 150, and 100 kW. Additionally, the TQAP specified that these tests would be conducted with the facility configured to maximize PC25C heat recovery potential. However, current Red Hook WPCP standard operating procedures do not allow the site to be isolated from the neighboring cogeneration facility. This plant configuration essentially eliminates all demand for heat from the PC25Cs. Therefore, all heat currently produced by the PC25Cs is removed through the cooling modules. For this test, heat recovery rates measured during the controlled test periods actually represent the total heat produced and removed by the PC25C.

The controlled test periods were followed by a 30-day period of extended monitoring to evaluate power and heat production and power quality over a range of ambient conditions and plant operations. During this period, off-site PC25C operators maintained system operations. More details regarding the system operations during this period are provided in Section 2.0. The specific verification parameters associated with the test are listed below. Brief discussions of each verification parameter and its method of determination are presented in Sections 1.4.1 through 1.4.5. Detailed descriptions of testing and analysis methods are provided in the TQAP and not repeated here.

Heat and Power Production Performance

- Electrical power output and heat recovery rate at selected loads
- Electrical, thermal, and total system efficiency at selected loads

Power Quality Performance

- Electrical frequency
- Voltage output
- Power factor
- Voltage and current total harmonic distortion

Emissions Performance

- Nitrogen oxides (NO_X), carbon monoxide (CO), total hydrocarbons (THC), carbon dioxide (CO_2), and methane (CH_4) concentrations at selected loads
- NO_X, CO, THC, CO_2, and CH_4 emission rates at selected loads
- Estimated NO_X and greenhouse gas emission reductions

Each of the verification parameters listed were evaluated during the controlled or extended monitoring periods as summarized in Table 1-1. This table also specifies the dates and time periods during which the testing was conducted. Simultaneous monitoring for power output, heat recovery rate, heat input, ambient meteorological conditions, and exhaust emissions was performed during each of the controlled test periods. ADG samples were collected to determine fuel lower heating value and other gas properties. Average electrical power output, heat recovery rate, energy conversion efficiency (electrical, thermal, and total), and exhaust stack emission rates are reported for each test period.

Results from the extended test are used to report total electrical energy generated and used on site, total thermal energy produced, greenhouse gas emission reductions, and electrical power quality. Greenhouse gas emission reductions for on-site electrical power generation are estimated using measured greenhouse gas emission rates and emissions estimates for electricity produced at central station power plants.

Table 1-1. Controlled and Extended Test Periods			
Controlled Test Periods			
Start Date, Time	**End Date, Time**	**Test Condition**	**Verification Parameters Evaluated**
05/19/04, 09:00	05/19/04, 14:25	Power command of 200 kW, three 60-minute test runs	NO_X, CO, CH_4, CO_2 emissions, and electrical, thermal, and total efficiency
05/19/04, 15:50	05/20/04, 11:20	Power command of 150 kW, three 60-minute test runs	
05/20/04, 12:25	05/20/04, 16:45	Power command of 100 kW, three 60-minute test runs	
Extended Test Period			
Start Date, Time	**End Date, Time**	**Test Condition**	**Verification Parameters Evaluated**
05/20/04, 17:00	06/19/04, 11:48	PC25C operated as dispatched by off-site UTC operators	Total electricity generated; total heat removed; power quality; and emission offsets

1.4.1. Heat and Power Production Performance

Electrical efficiency determination was based upon guidelines in the ASME *Performance Test Code for Fuel Cell Power Systems*, PTC-50 [2], and was calculated using the average measured net power output, fuel flow rate, and fuel lower heating value (LHV) during each controlled test period. The GPU and cooling module are both powered by the fuel cell, creating internal parasitic loads. Two additional parasitic loads that are external (not powered directly by the fuel cell) are the fuel cell stack ventilation fan and the water circulation pump. These two small loads are less than 1 kW combined. This verification did not include a separate measurement of these parasitic loads, and therefore reports the net system efficiency (based on the usable power delivered by the system).

The electrical power output was measured continuously throughout the verification period using instrumentation provided and installed by the GHG Center. Heat input was determined by metering the fuel consumption and determining ADG energy content. Fuel gas sampling and energy content analysis (via gas chromatograph) was conducted according to ASTM procedures to determine the lower heating value of the ADG. Ambient temperature, relative humidity, and barometric pressure were measured near the PC25C air intake to support the determination of electrical conversion efficiency as required in PTC-50. Electricity conversion efficiency was computed by dividing the average electrical energy output by the average energy input using Equation 1.

$$\eta = \frac{3412.14\,kW}{HI} \qquad \text{(Equation 1)}$$

where:

η = efficiency (%)

kW = average net electrical power output measured over the test interval (kW), (PC25C power delivered to site)

HI = average heat input using LHV over the test interval (Btu/hr); determined by multiplying the average mass flow rate of ADG to the system converted to standard cubic feet per hour (scfh) times the gas LHV (Btu per standard cubic foot, Btu/scf)

3412.14 = converts kW to Btu/hr

Simultaneous with electrical power measurements, heat recovery and removal rate was measured using a pair of heat meters. Separate meters were installed on both the hot water supply loop and the cooling module loop. The meters enabled 1-minute averages of differential heat exchanger temperatures and water flow rates to be monitored. Published fluid density and specific heat values for water were used so that heat recovery rates for each meter could be calculated at actual conditions per ANSI/ASHRAE Standard 125 [3].

$$\textit{Heat Recovery Rate (Btu/min)} = V\rho\, C_p\, (T1\text{-}T2) \qquad \text{(Equation 2)}$$

where:

V	=	total volume of liquid passing through the heat meter flow sensor during a minute (ft^3)
ρ	=	density of water (lb/ft^3), evaluated at the avg. temp. (T2 plus T1)/2
C_p	=	specific heat of water (Btu/lb °F), evaluated at the avg. temp. (T2 plus T1)/2
T1	=	temperature of water exiting heat exchanger (°F), (see Figure 1-3)
T2	=	temperature of water entering heat exchanger (°F), (see Figure 1-3)

The average heat recovery and removal rates measured during the controlled tests and the extended monitoring period (total of the hot water loop and cooling module loop combined) represent the heat production potential of the CHP system. Thermal energy conversion efficiency was computed as the average heat recovered or removed divided by the average energy input:

$$\eta_T = 60 \cdot Q_{avg} / HI \qquad \text{(Equation 3)}$$

where:

η_T	=	thermal efficiency (%)
Q_{avg}	=	average heat recovered (Btu/min)
HI	=	average heat input using LHV (Btu/hr); determined by multiplying the average mass flow rate of ADG to the system (converted to scfh) times the gas LHV (Btu/scf)

1.4.2. Measurement Equipment

Figure 1-3 illustrates the location of measurement variables contained in Equations 1 through 3. Power output was measured using a 7500 ION Power Meter (Power Measurements Ltd.) at a rate of approximately one reading every 8 to 12 milliseconds and logged on the Center's data acquisition system (DAS) as 1-minute averages. The logged one-minute average kW readings were averaged over the duration of each controlled test period to compute electrical efficiency. The kW readings were integrated for the extended test period over the duration of the verification period to calculate total electrical energy generated in units of kilowatt hours (kWh).

ADG fuel input was measured with an in-line Dresser-Roots Series B Model 5M175 rotary displacement meter. The meter was equipped with a frequency transmitter manufactured by Love Controls (Model SC 478). This transmitter was mounted on the meter's index and provided a scaled 4 - 20 mA signal to the DAS. The DAS recorded actual gas flow as one-minute averages. Gas temperature and pressure sensors were installed to enable flow rate compensation to provide mass flow output at standard conditions.

A total of six ADG samples were collected and analyzed during the controlled test periods to determine gas composition and heating value. Samples were collected at a point in the ADG delivery line downstream of the meter and are representative of the PC25C fuel. All samples were submitted to Empact Analytical Systems, Inc., of Brighton, CO, for compositional analysis in accordance with ASTM

Specification D1945 for quantification of methane to hexane, nitrogen, oxygen, and carbon dioxide [4]. The compositional data were then used in conjunction with ASTM Specification D3588 to calculate LHV and the relative density of the gas [5].

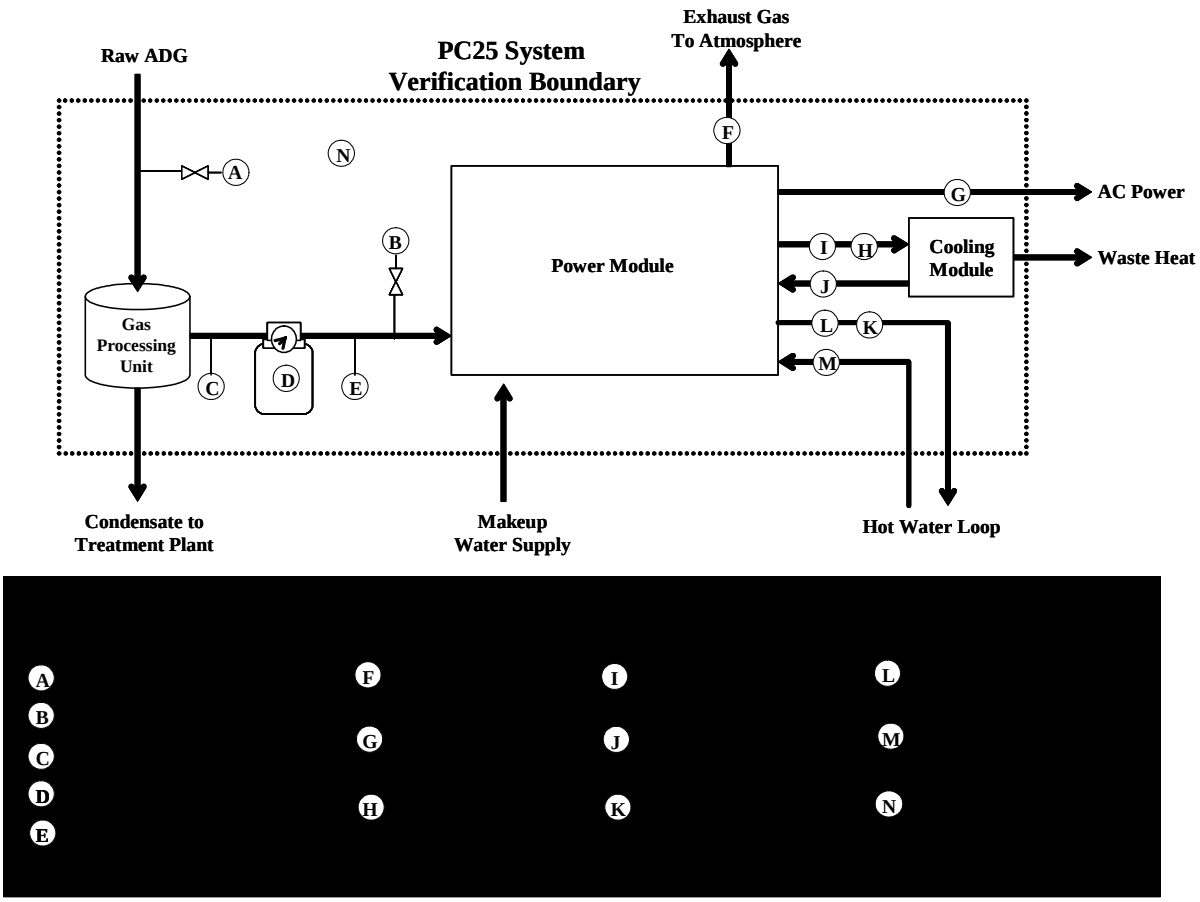

Figure 1-3. Schematic of Measurement System

A total of six corresponding raw ADG samples were also collected to evaluate GPU performance. The approach, procedures, and results of the GPU performance verification are reported in a separate verification statement and report titled *Environmental Technology Verification Report – UTC PC25C Fuel Cell Power Plant – Gas Processing Unit Performance for Anaerobic Digester Gas* [6].

Two Controlotron Model 1010EP1 energy meters were used to monitor the two hot water loops. These meters are digitally integrated systems that include a portable computer, ultrasonic fluid flow transmitters, and 1,000-ohm platinum resistance temperature detectors (RTDs). The meters have an overall rated accuracy of ± 2 percent of reading and provide a continuous 4-20 mA output signal over a range of 0 to 200 gallons per minute (GPM). The water flow rate and supply and return temperature data used to determine heat recovery rates were logged as one-minute averages throughout all test periods. The heat transfer fluid density and specific heat were determined by using ASHRAE and ASME density and specific heat values for water corrected to the average water temperature measured by the RTDs.

1.4.3. Power Quality Performance

The GHG Center and its stakeholders developed an approach to evaluate power quality based on the power quality parameters of interest and the measurement methods used in existing protocols and standards [7, 8, 9]. The GHG Center measured and recorded the following power quality parameters during the extended monitoring period:

- Electrical frequency
- Voltage
- Voltage THD
- Current THD
- Power factor

The 7500 ION power meter used for power output determinations was used to perform these measurements as described below and detailed in the TQAP. The ION power meter continuously measured electrical frequency at the generator's distribution panel. The DAS was used to record one-minute averages throughout the extended period. The mean, maximum, and minimum frequencies as well as the standard deviation are reported.

The PC25C generates power at nominal 480 volts (AC). The electric power industry accepts that voltage output can vary within ±10 percent of the standard voltage without causing significant disturbances to the operation of most end-use equipment. Deviations from this range are often used to quantify voltage sags and surges. The ION power meter continuously measured true root mean square (rms) line-to-line voltage at the generator's distribution panel for each phase pair. The DAS recorded one-minute averages for each phase pair throughout the extended period as well as the average of the three phases. The mean, maximum, and minimum voltages, as well as the standard deviation for the average of the three phases are reported.

THD is created by the operation of non-linear loads. Harmonic distortion can damage or disrupt many kinds of industrial and commercial equipment. Voltage harmonic distortion is any deviation from the pure AC voltage sine waveform. THD gives a useful summary view of the generator's overall voltage quality. The specified value for THD is a maximum of 5.0 percent based on "recommended practices for individual customers" in the IEEE 519 Standard. The ION meter continuously measured voltage THD up to the 63rd harmonic for each phase. The DAS recorded one-minute voltage THD averages for each phase throughout the test period and reported the mean, minimum, maximum, and standard deviation for the average THD for the three phases.

Current THD is any distortion of the pure current AC sine waveform. The current THD limits recommended in the IEEE 519 standard range from 5.0 to 20.0 percent, depending on the size of the CHP generator, the test facility's demand, and its distribution network design as compared to the capacity of the local utility grid. Detailed analysis of the facility's distribution network and the local grid are beyond the scope of this verification. The GHG Center, therefore, reports current THD data without reference to a particular recommended THD limit. The ION power meter, as with voltage THD, continuously measured current THD for each phase and reported the average, minimum, and maximum values for the period.

The ION power meter also continuously measured average power factor across each generator phase. The DAS recorded one-minute averages for each phase during all test periods. The GHG Center reported the maximum, minimum, mean, and standard deviation power factors averaged over all three phases.

1.4.4. Emissions Performance

Pollutant concentration and emission rate measurements for NO_X, CO, THC, CH_4, and CO_2 were conducted on the PC25C exhaust stack during all of the controlled test periods. Emissions testing coincided with the efficiency determinations described earlier. Test procedures used were U.S. EPA reference methods, which are well documented in the Code of Federal Regulations (CFR). The reference methods include measurement system performance specifications and test procedures, quality control procedures, and emission calculations (40CFR60, Appendix A) [10]. Table 1-2 summarizes the standard test methods that were followed. The testing procedures and sampling system were specifically designed for the extremely low pollutant concentrations expected. A detailed description of the methodology and sampling system used is included in the TQAP and not repeated here. A complete discussion of the data quality requirements is also presented in the TQAP.

The emissions testing was conducted by TRC Corporation of Windsor, Connecticut under the on-site supervision of the GHG Center field team leader. The PC25C exhaust system includes separate exhaust ducts from the reformer and fuel cell stack that are combined prior to discharge to atmosphere. The first test run was conducted in the reformer exhaust stack where the majority of pollutants were expected. After Run 1 however, a new sampling location was selected such that it included exhaust gases from the reformer and fuel cell stack exhaust ducts, as well as the dilution air drawn through the PC25C exhaust system to ventilate the unit (via an induced draft fan). This location was most representative of the actual PC25C emissions to atmosphere. Sampling was conducted during each test for approximately 60 minutes at a single point near the center of the combined PC25C exhaust stack.

Results of the gaseous pollutant testing are reported in units of parts per million volume dry (ppm) and ppm corrected to 15-percent O_2. Exhaust gas flow rate determinations were conducted during each test run in accordance with EPA Method 2 to convert measured pollutant concentrations to mass emissions. Stack gas velocity and temperature traverses were conducted using a calibrated thermocouple, a standard pitot tube, and an inclined oil manometer. The number and location of traverse points sampled was selected in accordance with EPA Method 1. Emission rates for each pollutant are then normalized to system power output and reported in terms of lb/kWh.

Table 1-2. Summary of Emissions Testing Methods

Pollutant	EPA Reference Method	Analyzer Type	Range
NO_X	7E	Thermo-Electron Corporation (TECO) Model 42CH (chemiluminescense)	0 – 2.5 ppm
CO	10	TECOI Model 48 (NDIR)	0 – 10 ppm
THC	25A	California Analytical Model 300 (FID)	0 – 100 ppm
CH_4	18	Hewlett-Packard 5890 GC/FID	0 – 100 ppm
CO_2	3A	Servomex (NDIR)	0 – 20 %
O_2	3A	Servomex (paramagnetic)	0 – 25 %

At the conclusion of Run 2, it was apparent that the dilution air drawn into the PC25C exhaust system (room air), contained measurable quantities of hydrocarbons. These hydrocarbons presented background THC emissions that caused a positive bias in the measured PC25C emissions. Therefore, background sampling was conducted for 10 minutes at the end of each test to quantify the THC concentrations in the

room air near the dilution air intake. Dilution air flow rate was determined using EPA Method 2 in order to calculate the mass flow of background THCs. The background THCs were then subtracted from the THC levels measured in the combined exhaust stack to report the THC emissions directly attributable to the PC25C. More detail regarding the background THC levels and their impact on the reported emissions is provided with the test results in Section 2.4.1.

1.4.5. Estimated Annual Emission Reductions

The electric energy generated by the PC25C offsets electricity otherwise supplied by the utility grid. Consequently, the reduction in electricity demand from the grid caused by this offset will result in changes in CO_2 and NO_X emissions associated with producing an equivalent amount of electricity at central power plants. If the PC25C emissions per kWh are less than the emissions per kWh produced by an electric utility, it can be inferred that a net reduction in emissions will occur at the site. If the emissions from the on-site generators are greater than the emissions from the grid, possibly due to the use of higher efficiency power generation equipment or zero emissions generating technologies at the power plants, a net increase in emissions may occur. An on-site CHP system used to provide heat as well as power will also typically create an emissions reduction for the baseline heat source. That is not the case at this facility, however, because the facility's heat demand is met by a large co-generating facility that can use the offset heat for other customers. Production of heat by the PC25C at Red Hook will not change operations at the cogeneration facility and, therefore, no additional emission reductions are realized.

Use of the PC25C at this facility presents an added environmental benefit by offsetting emissions from the enclosed flare. ADG used to fuel the PC25C would otherwise be combusted by the flare. An additional reduction in emissions will be realized under the PC25C system scenario if emissions of CO_2 and NO_X from the PC25C are lower than the emissions associated with the flare.

Emissions from the PC25C are compared with the baseline scenario to estimate annual NO_X and CO_2 emission levels and reductions. These pollutants were considered because CO_2 is the primary greenhouse gas emitted from combustion processes and NO_X is a primary pollutant of regulatory interest. Emission factors for the electric utility grid and the flare are available for both gases. Emission reductions are computed as follows:

$$\text{Reduction (lbs)} = E_{GRID} + E_{FLARE} - E_{CHP} \qquad \text{(Equation 4)}$$

$$\text{Reduction (\%)} = (E_{GRID} + E_{FLARE} - E_{CHP})/(E_{GRID} + E_{FLARE}) * 100$$

Where:

Reduction	=	Estimated annual emission reductions from on-site electricity generation, lbs or %
E_{CHP}	=	Estimated annual emissions from PC25C, lbs
E_{GRID}	=	Estimated annual emissions from utility grid, lbs
E_{FLARE}	=	Estimated annual emissions from flare, lbs

The following describes the methodology used.

<u>Step 1 - Estimation of PC25C CO_2 and NO_X Emissions</u>

The first step in calculating emission reductions was to estimate the emissions associated with generating electricity with ADG at the site over a given period of time (one year), operating at normal site

conditions. Based on the total electrical generation over the 30-day monitoring period (extrapolated to a one-year period), and the measured emission rated, the PC25C emissions can be estimate as follows:

$$E_{CHP} = ER_{CHP} * kWh_{CHP} \qquad \text{(Equation 5)}$$

Where:

E_{CHP} = Estimated annual emissions from PC25C fueled with ADG, lbs
ER_{CHP} = PC25C CO_2 or NO_X emission rate at full load on ADG, lb/kWh
Wh_{CHP} = Total annual electrical energy generated at the site, kWh

Step 2 – Estimation of Utility Grid Emissions

The grid emission rate (ER_{Grid}) is a complex subject, and the methodology for estimating it is continuously evolving. The TQAP includes a discussion on the concept of displaced emissions and details the strategy employed by the GHG Center to assign ER_{Grid} for this verification.

The GHG Center used the emission factors developed by the Ozone Transport Commission (OTC). The OTC emission factors for this region [the New York State Independent System Operator (NY ISO) region] are separated into ozone and non-ozone seasons as well as weekdays and night and weekend time periods. For this verification however, the center was not able to procure detailed facility demand data, and the PC25C extended monitoring period failed to provide a realistic estimate of annual PC25C generation (due to numerous outages caused by facility operations at Red Hook). Therefore, time weighted 2002 average emissions factors for the NY ISO are used here. They are 0.0023 lb/kWh for NO_X, and 1.49 lb/kWh for CO_2.

Estimated power grid emissions for equivalent power production, therefore, are based on the annual estimated kilowatt-hours generated by the PC25C, line losses, and the grid emission rates for CO_2 or NO_X as shown in Equation 6.

$$E_{GRID} = kWh_{CHP} * ER_{GRID} * 1.114 \qquad \text{(Equation 6)}$$

Where:

E_{GRID} = Annual grid emissions, lbs
kWh_{CHP} = estimated annual PC25C power generated, kWh
ER_{GRID} = emission rates from Table 1-4, lb/kWh
1.078 = Total transmission and distribution losses

Step 3 – Estimate Annual Flare Emissions

Published EPA AP-42 flare emission factors [11] were used to estimate emissions offsets realized through use of the PC25C. AP-42 provides methodology for estimating the NO_X and CO_2 emissions from an enclosed flare based on the amount of gas combusted. The flare emissions will be added to the estimated annual grid emissions to establish the total facility baseline emission estimate.

The approach used to estimate annual flare emissions is similar to the grid emissions estimate. The estimated annual ADG combusted in the flare is reduced by the amount of ADG used to fuel the PC25C. The average PC25C gas consumption rate measured during the verification testing at full load, along with the projected PC25C hours of operation, was used to estimate the amount of ADG used during a typical year of PC25C operation.

2.0 VERIFICATION RESULTS

2.1. OVERVIEW

The verification period started on May 19, 2004, and continued through June 19, 2004. The controlled tests were conducted on May 19 and 20, and were followed by a 30-day period of continuous monitoring to examine heat and power output, power quality, efficiency, and emission reductions.

The GHG Center acquired several types of data that represent the basis of verification results presented here. The following types of data were collected and analyzed during the verification:

- Continuous measurements (ADG pressure, temperature, and flow rate, power output and quality, heat recovery rate, and ambient conditions)
- ADG compositional data
- Emissions testing data

The field team leader reviewed, verified, and validated some data, such as DAS file data and reasonableness checks while on site. The team leader reviewed collected data for reasonableness and completeness in the field. The data from each of the controlled test periods was reviewed on site to verify that PTC-50 variability criteria were met. The emissions testing data was validated by reviewing instrument and system calibration data and ensuring that those and other reference method criteria were met. Calibrations for fuel flow, pressure, temperature, electrical and thermal power output, and ambient monitoring instrumentation were reviewed on site to validate instrument functionality. Other data such as fuel LHV analysis results were reviewed, verified, and validated after testing had ended. All collected data was classified as either valid, suspect, or invalid upon review, using the QA/QC criteria specified in the TQAP. Review criteria are in the form of factory and on-site calibrations, maximum calibration and other errors, audit gas analyses, and lab repeatability. Results presented here are based on measurements which met the specified Data Quality Indicators (DQIs) and QC checks and were validated by the GHG Center.

The GHG Center attempted to obtain a reasonable set of short-term data to examine daily trends in atmospheric conditions, electricity and heat production, and power quality. It should be noted that these results may not represent performance over longer operating periods or at significantly different operating conditions.

It is the intention of NYPA to operate the PC25Cs at the Red Hook site on a nearly continuous basis. This was not the case during the verification period however. There were numerous unexpected shutdowns during the 30-day test period, sometimes lasting several days. There were also periods when the unit was fueled with natural gas. Over the 30-day monitoring period, a total of only 165 hours were logged with the PC25C operating on ADG. All of the outages were caused by Red Hook operations, primarily ongoing work with the plants emergency backup power systems. The PC25C cannot operate during testing or repair of these systems. The GHG Center is not aware of any shutdowns or outages that were caused by problems within the PC25C system.

Results of the extended monitoring period presented in the following sections are based solely on the 165 hours during which the PC25C was running on ADG. Data collected while the unit was down or operating on natural gas are not included in this report.

Test results are presented in the following subsections:

Section 2.1 – Heat and Power Production Performance
(controlled test periods and extended monitoring)
Section 2.2 – Power Quality Performance
(extended monitoring)
Section 2.3 – Emissions Performance and Reductions
(controlled test periods)

The results show that the PC25C produces high quality power and is capable of operating in parallel with the utility grid. The unit can produce a steady 193 kW of electrical power when fueled with ADG and set at a power command of 200 kW. The largest production rate of available heat measured during the extended monitoring period was approximately 1,027 x 10^3Btu/hr. Electrical efficiency at full load averaged 36.8 percent. Because the Red Hook site does not use the waste heat, actual thermal efficiency could not be determined. However, if all of the available heat that was removed by the cooling module was recovered, thermal efficiency would be 56.9 percent and total CHP efficiency would be 93.8 percent.

NO_X emissions averaged 0.013 lb/MWh at full load. Emissions of CO and hydrocarbons were also very low during all test periods. Based on these measured generation and emission rates, annual NO_X emission reductions are estimated to be 890 pounds. CO_2 emission reductions realized by using ADG to fuel the PC25C instead of flaring an equivalent amount of ADG are estimated to be 337 tons. Detailed analyses are presented in the following sections.

In support of the data analyses, the GHG Center conducted an audit of data quality (ADQ) following procedures specified in the QMP. A full assessment of the quality of data collected throughout the verification period is provided in Section 3.0.

2.2. HEAT AND POWER PRODUCTION PERFORMANCE

The heat and power production performance evaluation included electrical power output, heat recovery, and CHP efficiency determinations during controlled test periods. The performance evaluation also included determination of total electrical energy generated and used and available thermal energy produced over the extended test period.

2.2.1. Electrical Power Output, Heat Production, and Efficiency During Controlled Tests

Figure 2-1 plots the power generated and heat produced by the PC25C during the controlled test periods. Table 2-1 summarizes the power output, available heat, and efficiency performance of the CHP system. The PC25C heat recovery unit operations and ADG fuel input determinations corresponding to the test results are summarized in Tables 2-2 and 2-3. A total of 6 ADG samples were collected for compositional analysis and calculation of LHV for heat input determinations. There was very little variability in the ADG composition. Average CH_4 and CO_2 concentrations of the ADG (after processing) were 61.4 and 37.1 percent, respectively. The average LHV was 552 Btu/scf and H_2S concentrations were below the method detection limit (4 parts per billion). H_2S concentrations in the 6 corresponding raw ADG samples averaged 93 ppm. More detail regarding the composition of the raw ADG and the performance of the GPU are provided in a separate report [6].

Figure 2-1 shows that power output is very stable at each of the three power commands. Heat production is also stable, but short-term variability is caused by cycling of the variable speed water circulation pump. The average net electrical power delivered to the facility was 193.1 kW_e at full load. The average

electrical efficiency at this power command was 36.8 percent. Electrical efficiencies at the 150 and 100 kW power commands averaged 38.2 and 37.4 percent, respectively. Electric power generation heat rate, which is an industry-accepted term to characterize the ratio of heat input to electrical power output, averaged 9,148 Btu/kWh at full load.

As mentioned earlier in Section 1.4, the Red Hook plant uses heat from a neighboring cogeneration plant to meet its demand, and currently demands very little or no heat from the PC25C. Most or all of the heat generated by the PC25C is removed through the cooling module to protect the system from overheating. During Runs 1 and 2, some heat was recovered by the CHP system. However, due to plant operating requirements, during the remainder of the runs and the extended monitoring period, no heat was recovered. Therefore, the potential thermal performance shown in Figure 2-1 and summarized in Table 2-1 is actually the combination of heat recovered and used by Red Hook (during Runs 1 and 2 only), and the heat removed through the cooling module. The total available heat produced (that is, the heat recovery and removal rates for the two loops) is summarized in Table 2-2. The center was not able to verify whether all of the heat produced and removed by the cooling module could be recovered for actual use if sufficient demand existed.

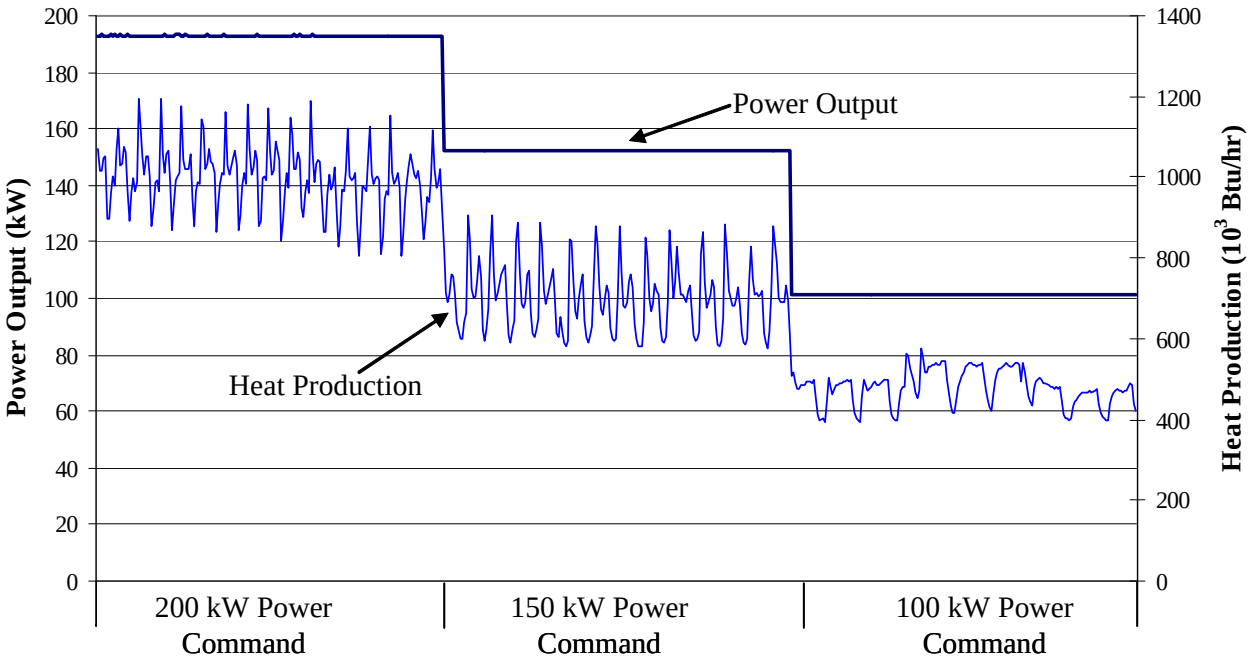

Figure 2-1. Power and Heat Production During the Controlled Test Periods

The total heat produced at full load averaged 1,018 10^3Btu/hr, or 298.3 kW_{th}/hr. If all of this available heat were recovered and used, the estimated thermal efficiency would be 56.9 percent. The total CHP efficiency (electrical and thermal combined) would be 93.8 percent under these conditions. It should be noted that thermal efficiency is highly dependant on cooling loop return temperatures. Return temperatures from the cooling module were relatively low, so it is likely that thermal efficiency will be lower when heat recovery system return temperatures are higher than seen here. The net CHP heat rate, which includes energy available for heat recovery, was 3,678 Btu/kWh. Results of the reduced load tests are also included in the tables. Results show that electrical efficiency is consistent as the power output is reduced. The available heat is significantly reduced at lower power settings.

Table 2-1. PC25C Heat and Power Production Performance

Test ID	Test Condition	Heat Input, HI (10^3Btu/hr)	Electrical Power Generation Performance		Heat Recovery Performance		Total CHP System Efficiency (Actual / Potential, %)[c]	Ambient Conditions [d]	
			Power Delivered [a] (kW_e)	Efficiency (%)	Heat Recovered / Removed[b] (10^3Btu/hr)	Thermal Efficiency (Actual / Potential, %)[c]		Temp (°F)	RH (%)
Run 1	200 kW power command	1,791	193.1	36.8	131 / 883	7.3 / 56.6	44.1 / 93.4	82.3	50.7
Run 2		1,789	193.1	36.8	121 / 883	6.8 / 56.2	43.6 / 93.0	82.1	53.6
Run 3		1,787	193.0	36.9	0.4 / 1,036	0.0 / 58.0	36.9 / 94.9	77.7	57.1
Avg.		**1,789**	**193.1**	**36.8**	**84.1 / 994**	**4.7 / 56.9**	**41.5 / 93.8**	**80.7**	**53.8**
Run 4	150 kW power command	1,364	152.3	38.1	–2.0 / 717	0.0 / 52.4	38.1 / 90.5	75.6	55.2
Run 5		1,352	152.2	38.4	0.0 / 690	0.0 / 51.0	38.4 / 89.4	75.2	44.1
Run 6		1,360	152.3	38.2	–0.1 / 696	0.0 / 51.2	38.2 / 89.4	78.0	34.5
Avg.		**1,359**	**152.3**	**38.2**	**–0.7 / 701**	**0.0 / 51.5**	**38.2 / 89.8**	**76.3**	**44.6**
Run 7	100 kW power command	907.2	101.5	38.2	–0.1 / 468	0.0 / 51.5	38.2 / 89.7	80.0	19.7
Run 8		952.1	101.5	36.4	–0.1 / 513	0.0 / 53.8	36.4 / 90.2	79.3	27.4
Run 9		924.4	101.5	37.5	–0.1 / 460	0.0 / 49.7	37.5 / 87.2	78.4	29.0
Avg.		**927.9**	**101.5**	**37.4**	**–0.1 / 480**	**0.0 / 51.7**	**37.4 / 89.0**	**79.2**	**25.4**

[a] Represents actual power available for consumption at the test site (net power).
[b] Divide by 3.412 to convert to equivalent kilowatts (kW).
[c] Actual thermal and CHP efficiency is based on the heat recovered during the testing at the Red Hook plant. Potential thermal and CHP efficiency is estimated by assuming that all available heat is utilized in a heat recovery application.
[d] Barometric pressure remained relatively consistent throughout the test runs (14.82 to 14.95 psia).

Table 2-2. PC25C Heat Recovery Unit and Cooling Module Operating Conditions

Test ID	Test Condition	Hot Water Header Heating Loop				Cooling Module Loop				Total Available Heat (10^3Btu/hr)
		Fluid Flow Rate, V_b (GPM)	Outlet Temp., $T1_b$ (°F)	Inlet Temp., $T2_b$ (°F)	Heat Recovery Rate (10^3Btu/hr)	Fluid Flow Rate, V_a (GPM)	Outlet Temp., $T1_a$ (°F)	Inlet Temp., $T2_a$ (°F)	Heat Removal Rate (10^3Btu/hr)	
Run 1	200 kW power command	20.1	180.2	166.8	130.6	22.3	167.3	87.1	882.8	1,013.4
Run 2		20.1	182.4	169.9	121.3	21.6	169.2	86.7	883.2	1,004.6
Run 3		0.25	147.2	144.8	0.42	25.9	171.6	90.6	1,035.9	1,036.3
Avg.		**13.5**	**169.9**	**160.2**	**84.1**	**23.3**	**169.5**	**88.1**	**994.0**	**1,018.1**
Run 4	150 kW power command	0.42	128.4	138.0	–2.00	16.3	175.5	86.2	716.5	714.5
Run 5		0.68	100.3	100.2	0.03	15.4	176.3	86.2	690.2	690.3
Run 6		0.73	96.8	97.0	–0.07	15.7	176.5	86.8	695.9	695.9
Avg.		**0.61**	**108.5**	**111.7**	**–0.68**	**15.8**	**176.3**	**86.4**	**700.9**	**700.2**
Run 7	100 kW power command	0.72	96.1	96.5	–0.14	11.9	165.8	86.3	467.6	467.4
Run 8		0.11	61.9	64.5	–0.14	11.9	174.0	86.4	512.5	512.3
Run 9		0.62	87.4	88.0	–0.14	11.7	165.9	86.3	459.6	459.5
Avg.		**0.49**	**81.8**	**83.0**	**–0.14**	**11.8**	**168.6**	**86.4**	**479.9**	**479.7**

Table 2-3. PC25C Heat Input Determinations						
		ADG Fuel Input				
Test ID	**Test Condition**	**Heat Input , HI (10^3Btu/hr)**	**Gas Flow Rate (scfm)**	**LHV (Btu/scf)**	**Gas Pressure (psia)**	**Gas Temp (^{o}F)**
Run 1	200 kW power command	1,791	53.8	555.3	16.2	81.2
Run 2		1,789	53.7	555.3	16.2	81.6
Run 3		1,787	53.6	555.3	16.2	81.6
Avg.		**1,789**	**53.7**	**555.3**	**16.2**	**81.5**
Run 4	150 kW power command	1,364	41.1	552.8	15.7	80.4
Run 5		1,352	40.6	555.7	15.8	77.4
Run 6		1,360	40.8	555.7	15.8	77.7
Avg.		**1,359**	**40.8**	**554.7**	**15.8**	**78.5**
Run 7	100 kW power command	907.2	27.5	549.4	15.7	77.4
Run 8		952.1	28.9	549.4	15.7	77.3
Run 9		924.4	28.0	549.4	15.7	77.1
Avg.		**927.9**	**28.1**	**549.4**	**15.7**	**77.3**

2.2.2. Electrical and Thermal Energy Production and Efficiency During the Extended Test Period

Figure 2-2 presents a time series plot of 1-minute average power and heat production and ADG consumption during the extended verification period. As described earlier, although the extended monitoring period spanned 30 days, the PC25C was operating on ADG for only 165 hours during that period. Periods of down time or operation on natural gas (usually only during system startup) are not included in any of the figures and analyses presented here.

A total of 27,748 kWh_e electricity and 35,296 kWh_{th} of thermal energy (or 120.4 x 10^6Btu) were generated from ADG during the 165 hours of operation. The power generating plot in Figure 2-2 shows that power output is very stable at a variety of power commands ranging from 100 to 200 kW. The stability of power output over these extended periods of operation indicates that PC25C performance is not affected by external variables such as ambient conditions or fuel quality. Since the PC25C was not always operated at full load, the average power generated over the extended period was 166 kW_e. Heat production is more variable than power output, but the amount of heat produced by the fuel cell correlates with power output. The figure shows that ADG consumption is also very stable at each power command.

Figure 2-2 shows a short interruption in power generation that occurred while the unit was operating on ADG. The data show that at 11:31 on May 21, PC25C power output decreased from 101 kW through zero, and began consuming between 13 and 35 kW of power until about 12:06. By 12:27, the fuel cell had ramped back up to 177 kW. This event also is apparent in the power factor and THD data (Figures 2-5 and 2-6). Operators were not able to provide and explanation of this event.

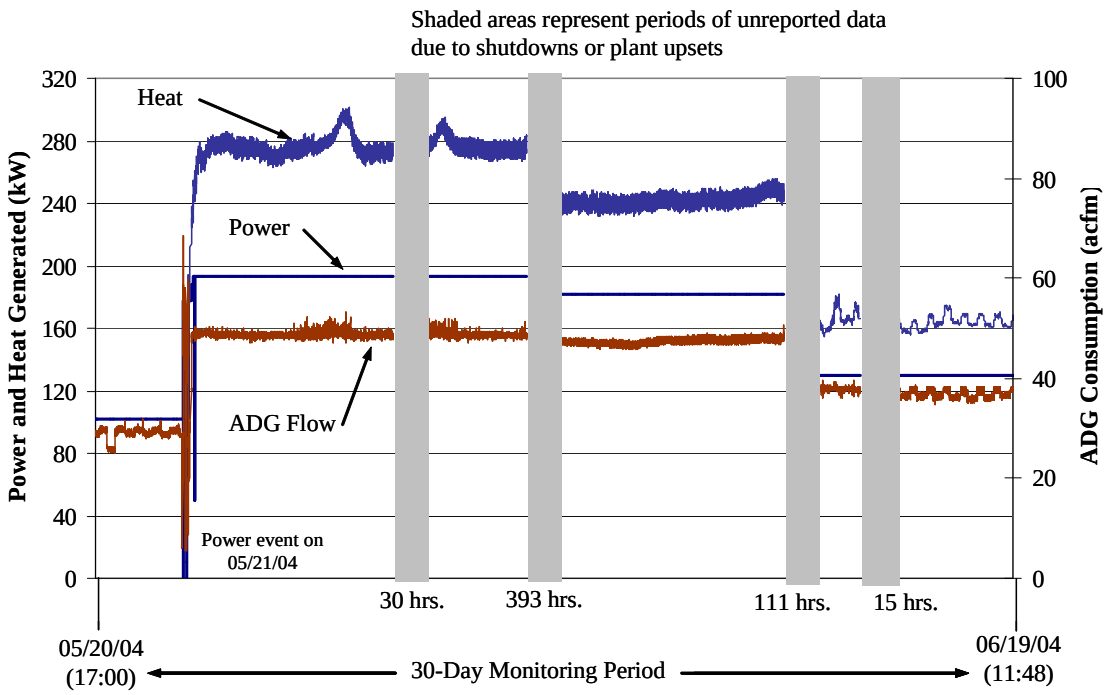

Figure 2-2. Heat and Power Production During the Extended Monitoring Period

Figure 2-3 shows hourly average PC25C electrical, thermal, and total CHP efficiencies during the extended monitoring period. Efficiency throughout the period was consistent with those measured during the controlled test periods.

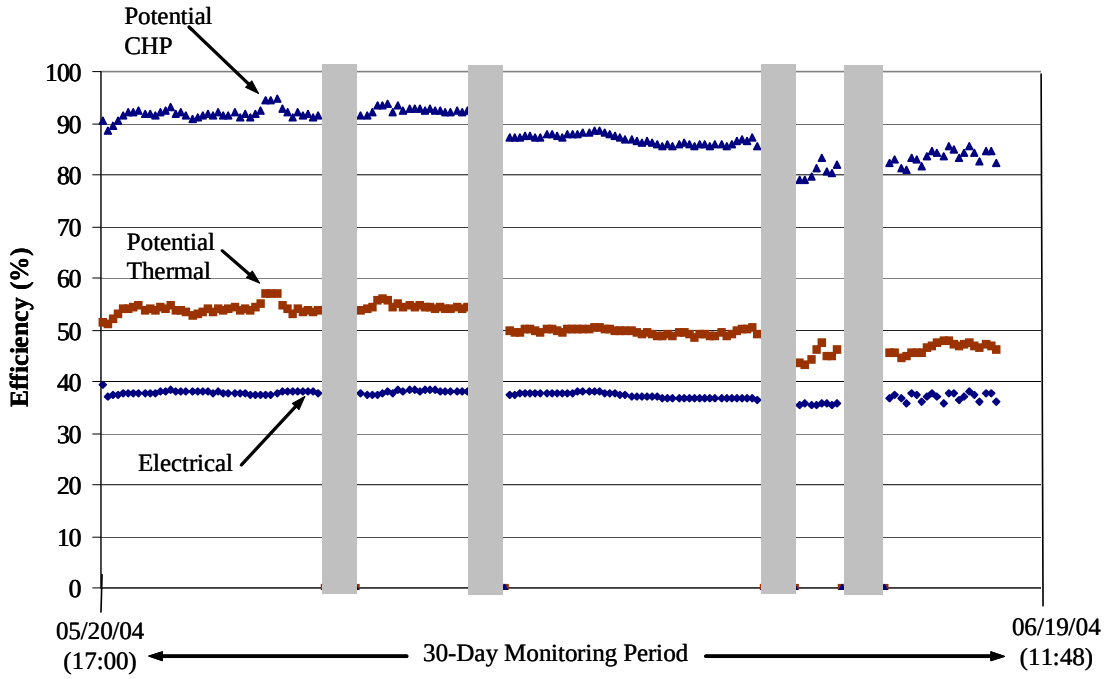

Figure 2-3. PC25C Efficiency During the Extended Monitoring Period

2.3. POWER QUALITY PERFORMANCE

Figures 2-4 through 2-6 plot the PC25C power quality for the period including voltage, frequency, power factor, and THD. Table 2-4 summarizes the power quality statistics.

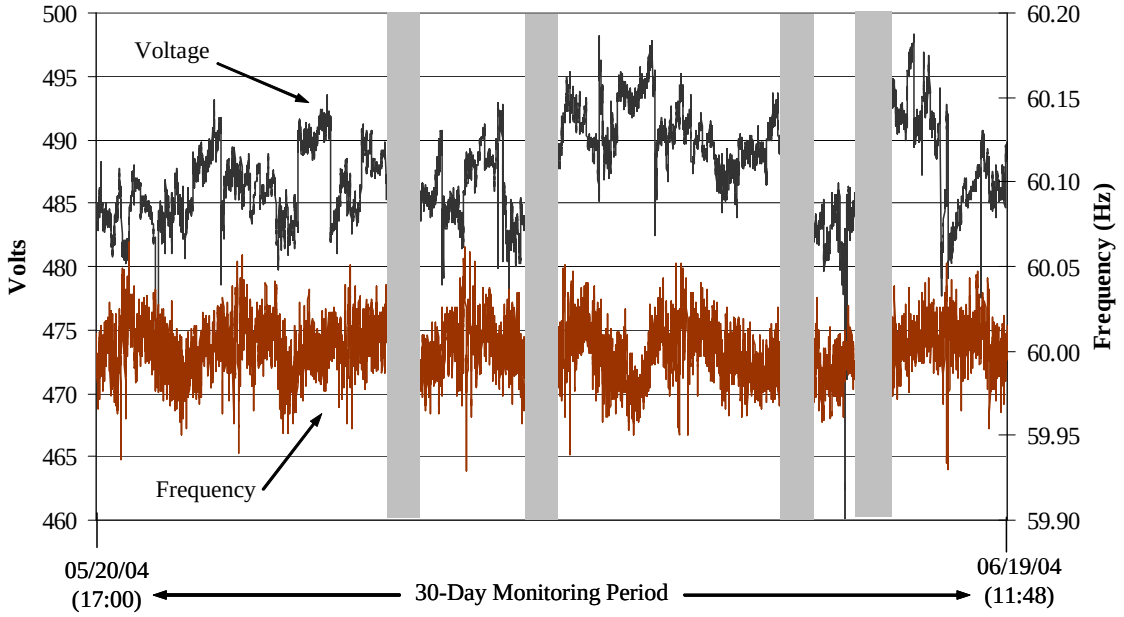

Figure 2-4. PC25C Voltage and Frequency During the Extended Monitoring Period

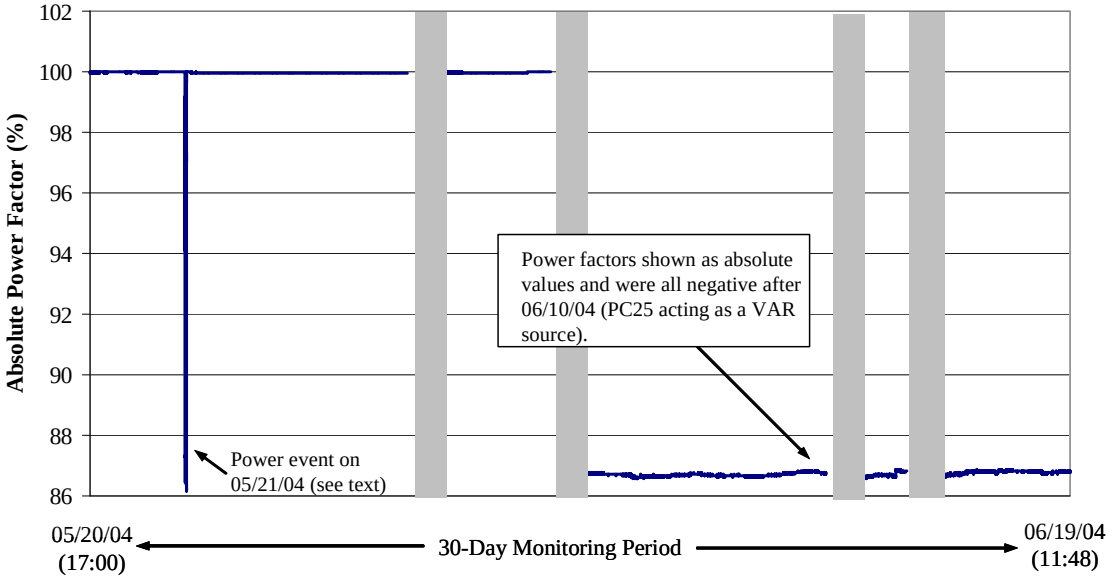

Figure 2-5. PC25C Power Factor During the Extended Monitoring Period

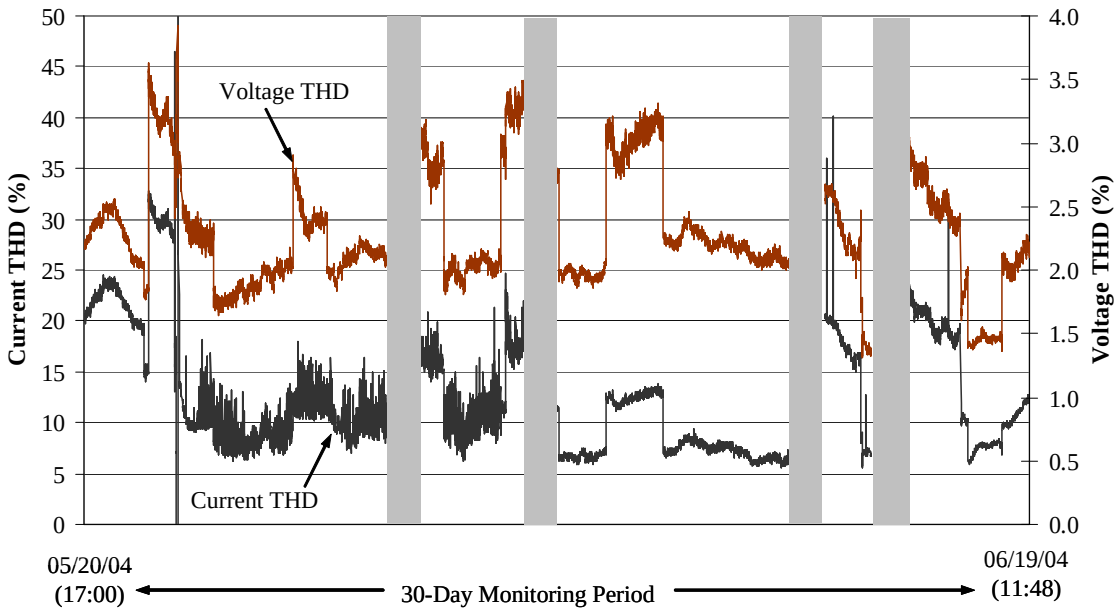

Figure 2-6. PC25C Current and Voltage THD During the Extended Monitoring Period

Table 2-4. Summary of PC25C Power Quality

Parameter	Average	Maximum Recorded	Minimum Recorded	Standard Deviation
Voltage (volts)	487.6	498.4	457.2	3.81
Frequency (Hz)	60.00	60.08	59.93	0.017
Power Factor[a] (%)	7.22	100	-99.99	93.37
Power Factor[b] (%)	93.41	100	86.14	6.62
Current THD (%)	12.50	309.1[c]	0.00	7.10
Voltage THD (%)	2.29	3.93	1.31	0.45

[a] Average power factor is misleading due to both positive and negative power factors recorded (see discussion).
[b] Power factors summarized as absolute values for simplicity (as in Figure 2-5).
[c] High current THDs were recorded during power event on May 21 when current was very low. Highest current THD during stable operation was 40.1 percent.

The voltage and frequency of the power generated by the PC25C were stable and in the range expected (Figure 2-4). Figure 2-5 shows power factor as absolute values for simplicity. During the first portion of the extended monitoring period, the fuel cell produced power at near unity (about 99.7 percent) positive power factor. After the second data interruption, however, average power factor was approximately 88.5 percent negative and remained so for the balance of the monitoring period. The cause of this change in power factor could not be determined because the PC25C is not isolated from the grid or sources of

electrical load within the plant. Both will impact the unit's power factor depending on plant operations and load.

Voltage THD was low during the entire verification period and well within the IEEE recommendation of 5 percent. Current THD averaged 12.5 percent and exceeded the IEEE recommended limit on several occasions. The highest values observed were during the power down event previously discussed.

2.4. EMISSIONS PERFORMANCE

2.4.1. PC25C Exhaust Emissions

Stack emission measurements were conducted during each of the controlled test periods summarized in Table 1-1. All testing was conducted in accordance with the EPA reference methods listed in Table 1-2. The PC25C was maintained in a stable mode of operation during each test run based on PTC-50 variability criteria.

Emissions results are reported in units of parts per million volume dry, corrected to 15-percent O_2 (ppm at 15-percent O_2) for NO_X, CO, and THC. Concentrations of CO_2 are reported in units of volume percent, and TPM concentrations are reported as grains per dry standard cubic foot (gr/dscf). These pollutant concentration data were converted to mass emission rates using measured exhaust stack flow rates and are reported in units of pounds per hour (lb/hr). The emission rates are also reported in units of pounds per megawatt hour electrical output ($lb/kMWh_e$). They were computed by dividing the mass emission rate by the electrical power generated during each test run.

Sampling system QA/QC checks were conducted in accordance with TQAP specifications to ensure the collection of adequate and accurate emissions data. These included analyzer linearity tests, sampling system bias and drift checks, and sampling train leak checks. Results of the QA/QC checks are discussed in Section 3. The results show that DQOs for all gas species met the reference method requirements. Table 2-5 summarizes the emission rates measured during each run and the overall average emissions for each set of tests.

In general, PC25C emissions of each of the pollutants quantified were very low during all test periods. NO_X concentrations in the combined exhaust stack were consistent throughout the range of operation averaging 0.43 ppm at 15% O_2 at full power command and 0.41 ppm at 15% O_2 at the lowest load tested. The average NO_X emission rate at full power, normalized to power output, was 0.013 lb/MWh.

Exhaust gas CO concentrations averaged 1.64 ppm at 15% O_2 at full load and increased to an average 4.14 ppm at 15% O_2 at the 100 kW power command. Corresponding average CO emission rates at full load averaged 0.029 lb/MWh.

Table 2-5. PC25 Emissions During Controlled Test Periods

	Power Output (kW)	Exhaust O_2 (%)	CO Emissions			NO_x Emissions			THC Emissions[c]			CH_4 Emissions[c]			CO_2 Emissions		
			(ppm at 15% O_2)	lb/hr	lb/MWh	(ppm at 15% O_2)	lb/hr	lb/MWh	(ppm at 15% O_2)	lb/hr	lb/MWh	(ppm at 15% O_2)	lb/hr	lb/MWh	%	lb/hr	lb/MWh
Run 1[a]	193.1	8.7	0.35	1.38E-03	7.15E-03	0.26	1.68E-03	8.72E-03	5.80	0.01	0.07	7.50	0.02	0.09	9.8	295.5	1530
Run 2	193.1	19.3	1.59	6.04E-03	3.13E-02	0.39	2.45E-03	1.27E-02	80.0	0.10	0.50	82.2	0.10	0.52	1.3	287.1	1487
Run 3	193.0	19.5	1.69	5.24E-03	2.72E-02	0.47	2.41E-03	1.25E-02	160	0.21	1.06	162	0.21	1.09	1.3	267.8	1387
AVG[b]	**193.1**	**19.4**	**1.64**	**5.64E-03**	**2.92E-02**	**0.43**	**2.43E-03**	**1.26E-02**	**120**	**0.15**	**0.78**	**122**	**0.16**	**0.80**	**1.3**	**277.4**	**1437**
Run 4	152.3	19.8	1.07	2.62E-03	1.72E-02	0.43	1.74E-03	1.15E-02	266	0.20	1.32	254	0.18	1.21	0.9	185.4	1217
Run 5	152.2	19.8	4.29	1.19E-02	7.83E-02	0.53	2.42E-03	1.59E-02	338	0.27	1.79	343	0.28	1.84	0.8	187.3	1231
Run 6	152.3	19.7	2.95	8.69E-03	5.71E-02	0.36	1.76E-03	1.16E-02	157	0.15	0.95	157	0.15	0.96	1.0	227.8	1495
AVG	**152.3**	**19.8**	**2.77**	**7.74E-03**	**5.09E-02**	**0.44**	**1.98E-03**	**1.30E-02**	**254**	**0.21**	**1.36**	**250**	**0.21**	**1.40**	**0.9**	**200.1**	**1314**
Run 7	101.5	20.1	3.69	7.24E-03	7.13E-02	0.38	1.21E-03	1.20E-02	226	0.11	1.12	209	0.09	0.92	0.6	136.6	1346
Run 8	101.5	20.1	3.69	7.59E-03	7.47E-02	0.44	1.47E-03	1.45E-02	189	0.10	0.95	189	0.10	0.95	0.6	143.1	1410
Run 9	101.5	20.2	5.06	8.83E-03	8.70E-02	0.42	1.21E-03	1.19E-02	244	0.21	2.03	212	0.17	1.70	0.7	162.0	1596
AVG	**101.5**	**20.1**	**4.14**	**7.89E-03**	**7.77E-02**	**0.41**	**1.30E-03**	**1.28E-02**	**220**	**0.14**	**1.37**	**203**	**0.12**	**1.19**	**0.6**	**147.2**	**1451**

[a] Run 1 was conducted in the reformer exhaust duct and represents reformer emissions only.

[b] Average of Runs 2 and 3 only, which were conducted in the combined exhaust gas duct and represent emissions to atmosphere.

[c] Reported THC and CH_4 emission rates in units of lb/hr and lb/MWh are corrected for background contributions of THC in the PC25 dilution air. Reported emissions are not corrected for background contributions in the power plant air intake.

Quantification of THC and CH_4 emissions was complicated by the background hydrocarbons in the ambient air that were drawn into the PC25C exhaust system by the dilution air fan. The center attempted to correct measured exhaust stack emissions for this contamination by measuring the background THC concentrations before and after each test run and measuring the volumetric flow of dilution air. The mass flow of THC through the system was then subtracted from the THC and CH_4 emission rates measured in the stack. The reported emission rates summarized in Table 2-5 (lb/hr and lb/MWh) represent the corrected emission rates. These corrections do not however account for hydrocarbons drawn into the system at the fuel cell stack. Reported hydrocarbon emissions ranged from 0.78 lb/MWh at full load to 1.37 lb/MWh at the 100 kW power setting. The reader is warned however, that the THC and CH_4 emission rates presented here are still much higher than what has been reported on other PC25C emission tests. In three previous tests on other PC25Cs, the highest measured THC emission rate was 0.02 lb/MWh. One test of particular interest was conducted at a similar facility, by the same test crew, on a new PC25C using anaerobic digester gas. THC emissions for that unit (an outdoor installation) were less than 0.011 lb/MWh. It is likely that results presented here were biased high by the background hydrocarbons in the building. More detail regarding the results from other tests is provided by UTC in Section 4.0 of this report. Background concentrations of the other pollutants were insignificant.

Concentrations of CO_2 in the PC25C exhaust gas averaged 1.3 percent at full power and decreased to a low of 0.6 percent as power output was reduced. These concentrations correspond to average CO_2 emission rates of 1,437 and 1,451 lb/MWh, respectively.

2.4.2. Estimation of Annual NO_X and CO_2 Emission Reductions

Section 1.4.5 outlined the approach for estimating the annual emission reductions that may result from use of the PC25C and ADG at this facility. The detailed approach is provided in the TQAP.

Step 1 – Annual PC25C Emissions

The first step is to estimate annual PC25C NO_X and CO_2 emissions based on data generated during this verification. The average NO_X and CO_2 emission rates at full load were 0.126 and 1,437 lb/MWh, respectively. The power delivered by the PC25C during the 30-day verification period (27.75 MW), results in an estimated annual generating rate of 337.6 MW. These values result in estimated annual NO_X and CO_2 emissions of 0.021 and 243 tons per year (ton/yr) of NO_X and CO_2, respectively.

These estimates are conservatively low given the excessive PC25C downtime and outages during the 30-day monitoring period that were caused by facility operations. The GHG Center conducted verification testing on a similar PC25C at a landfill and verified availability at 97 percent [12]. Based on this availability and the average generating rate measured during the verification (166 kW), the annual estimated potential PC25C generation with ADG is estimated to be at least 1,411 MW. For the benefit of potential users of the PC25C where ADG or other types of biogas are available, this report will also estimate hypothetical annual emission reductions based on this expected generation rate. For the PC25C tested here, the annual NO_X and CO_2 emissions (assuming 97 percent availability) are then 0.088 and 1,014 ton/yr, respectively.

Step 2 – Utility Grid Emissions

The average NY ISO NO_X and CO_2 emission rates published by OTC and used here are 2.30 and 1,490 lb/MWh, respectively. Based on the measured PC25C generating rate described above, the annual estimated NO_X and CO_2 emissions for an equivalent amount of power from the grid are 0.399 and 252

ton/yr, respectively. Based on the hypothetical potential generating rate described above, the annual estimated NO_X and CO_2 emissions for an equivalent amount of power from the grid are 1.63 and 1,051 ton/yr, respectively.

Step 3 – Annual Flare Emissions

The procedures provided in AP-42 to estimate NO_X and CO_2 emissions from the enclosed flare were used to estimate flare emissions caused by combusting an amount of ADG equivalent to the amount used to fuel the PC25C, had the PC25C not been operating. Consistent with the emission reductions determinations for power production, flare emissions were determined using two scenarios. Specifically, flare emissions were estimated based on the amount of ADG consumed by the PC25C during the verification period, and based on the hypothetical case where the PC25C is available and operates on ADG 97 percent of the time.

Based on PC25C operations during the verification period, the PC25C is projected to operate 2,007 hours per year at an average 166 kW electrical generation. Using the ADG consumption rates measured during the verification, this scenario results in an estimated annual ADG consumption of 5.432 million standard cubic feet per year (10^6scf/yr). Following AP-42 procedures for estimating emission factors, this amount of ADG combusted in the flare will result in estimated NO_X and CO_2 emissions of 0.067 and 328 ton/yr, respectively.

Using the hypothetical case, the PC25C is projected to operate 8,497 hours per year at 166 kW. Using the ADG consumption rates measured during the verification, this scenario results in an estimated annual ADG consumption of 22.99 MMscf/yr. This amount of ADG combusted in the flare will result in estimated NO_X and CO_2 emissions of 0.282 and 1,389 ton/yr, respectively.

Step 4 – Determination of Estimated Emission Reductions

Estimated annual NO_X and CO_2 emissions for the two operational scenarios described are summarized in Table 2-6. For both scenarios, significant reductions in pollutant emissions were observed.

Table 2-6. Estimation of PC25C Emission Reductions

Operating Scenario (annual hours of Operation)	Annual PC25C Emissions (tons)		Baseline Case (Red Hook Without PC25C) Annual Emissions (tons)						Estimated Annual Emission Reductions (tons)	
			Grid Emissions		Flare Emissions		Total Emissions			
	NO_X	CO_2	NO_X	CO_2	NO_X	CO_2	NO_X	CO_2	NO_X	CO_2
2,007[a]	0.021	243	0.399	252	0.067	328	0.466	580	0.445	337
8,497[b]	0.088	1014	1.63	1051	0.282	1389	1.91	2440	1.82	1426

[a] Based on the PC25C availability during the verification period, and the average measured power output of 166 kW.
[b] Based on the expected PC25C availability of 97 percent, and the average measured power output of 166 kW.

It should be noted that the measured CH_4 emission rate for the PC25C was 0.80 lb/MWh, higher than the utility grid CH_4 emission factor of 0.10 lb/MWh. Assuming the flare is 100 percent efficient, the PC25C would introduce an overall increase in CH_4 emissions. This increase will offset a small portion of the CO_2 emission reductions based on carbon equivalents (less than 1 percent of the CO_2 reductions shown in Table 2-6 would be offset by the increase in CH_4 emissions).

3.0 DATA QUALITY ASSESSMENT

3.1. DATA QUALITY OBJECTIVES

This verification was supported by an Audit of Data Quality (ADQ) conducted by the GHG Center QA manager. During the ADQ, the QA manager randomly selected data supporting each of the primary verification parameters and followed the data through the analysis and data processing system. The ADQ confirmed that no systematic errors were introduced during data handling and processing. A performance evaluation audit (PEA) was planned but not conducted. Similar PEAs were recently conducted on two similar CHP verifications [13, 14] and it was decided to not repeat the PEA a third time. Finally, a readiness and planning review was conducted by the QA manager. During the readiness and planning review, the QA Manager confirmed that the field measurements and activities conformed to the approved TQAP.

The GHG Center selects methodologies and instruments for all verifications to ensure a stated level of data quality in the final results. The GHG Center specifies data quality objectives (DQOs) for each verification parameter before testing commences. Each test measurement that contributes to the determination of a verification parameter has stated data quality indicators (DQIs) which, if met, ensure achievement of that verification parameter's DQO.

Table 3-1. Verification Parameter Data Quality Objectives

Verification Parameter	Original DQO Goal[a] Relative (%) /Absolute (units)	Achieved[b] Relative (%) /Absolute (units)
Power and Heat Production Performance		
Electrical power output (kW)	± 1.0% / 2.0 kW	± 1.0% / 1.9 kW
Electrical efficiency (%)	± 1.6% / 0.56%[c]	± 3.3% / 1.2%[c]
Heat recovery rate (10^3Btu/hr)	± 1.7% / 14 10^3Btu/hr[c]	± 1.9 % / 19 10^3Btu/hr [c]
Thermal energy efficiency (%)	± 1.7% / 0.7%[c]	± 3.7% / 2.1%[c]
CHP production efficiency (%)	± 2.3% / 1.7%[c]	± 2.5% / 2.4%[c]
Power Quality Performance		
Electrical frequency (Hz)	± 0.01% / 0.006 Hz	± 0.01% / 0.006 Hz
Voltage	± 1.0 % / 4.85 V[c]	± 1.0 % / 4.88 V[c]
Power factor (%)	± 0.50% / TBD	± 0.50% / 0.47%
Voltage and current total harmonic distortion (THD) (%)	± 1.0% / TBD	± 1.0% / 0.01%
Emissions Performance		
NO_X, CO, CO_2, and O_2, concentration accuracy	± 2.0% of span[d]	± 2.0% of span[d]
THC and CH_4 concentration accuracy	± 5.0% of span[d]	± 5.0% of span[d]

[a] Original DQO goals as stated in TQAP. Absolute errors were provided in the TQAP, where applicable, based on anticipated values.
[b] Overall measurement uncertainty achieved during verification. The absolute errors listed are based on these uncertainties, and the average values measured during the verification
[c] Calculated composite errors were derived using the procedures described in the TQAP.
[d] Qualitative data quality indicators based on conformance to reference method requirements.

The establishment of DQOs begins with the determination of the desired level of confidence in the verification parameters. Table 3-1 summarizes the DQOs established in the test planning stage for each verification parameter. The actual data quality achieved during testing is also shown. The next step is to identify all measured values which affect the verification parameter and determine the levels of error

which can be tolerated. These DQIs, most often stated in terms of measurement accuracy, precision, and completeness, are used to determine if the stated DQOs are satisfied. The DQIs for this verification–used to support the DQOs listed in Table 3-1–are summarized in Table 3-2.

The DQIs specified in Table 3-2 contain accuracy, precision, and completeness levels that must be achieved to ensure that DQOs were met. Reconciliation of DQIs is conducted by performing independent performance checks in the field with certified reference materials and by following approved reference methods, factory calibrating the instruments prior to use, and conducting QA/QC procedures in the field to ensure that instrument installation and operation are verified. The following sections address reconciliation of each of the DQI goals.

3.2. RECONCILIATION OF DQOs AND DQIs

Table 3-2 summarizes the range of measurements observed in the field and the completeness goals. Completeness is the number or percent of valid determinations actually made relative to the number or percent of determinations planned. The completeness goals for the controlled tests were to obtain electrical and thermal efficiency as well as emission rate data for three test runs conducted at each of three different load conditions. This completeness goal was achieved.

Completeness goals for the extended tests were to obtain 90 percent of 2 to 4 weeks of power quality, power output, heat recovery rate, and ambient measurements. Although 30 complete days of valid data were collected during the verification, the PC25C was shut down for much of this period in response to plant operating problems. During this period, 23 percent of the data was collected while the unit was running and was useful in establishing trends in power and heat performance capability at varying ambient temperatures as discussed in Section 2.0.

Table 3-2 also includes accuracy goals for measurement instruments. Actual measurement accuracies achieved are also reported based on instrument calibrations conducted by manufacturers, field calibrations, reasonableness checks, and/or independent performance checks with a second instrument. Table 3-3 includes the QA/QC procedures that were conducted for key measurements in addition to the procedures used to establish DQIs. The accuracy results for each measurement and their effects on the DQOs are discussed below.

Table 3-2. Summary of Data Quality Indicator Goals and Results

Measurement Variable		Instrument Type / Manufacturer	Instrument Range	Range Observed in Field	Accuracy			Completeness	
					Goal	Actual	How Verified / Determined	Goal	Actual
Power Output and Quality	Power	Electric Meter/ Power Measurements 7500 ION	0 to 400 kW	0 to 193.5 kW	± 1.0% reading	± 1.0% reading	Biennial instrument calibration from manufacturer	Controlled tests: three valid runs per load meeting PTC 50 criteria. Extended test: 90% of one-minute readings for 2 weeks.	Controlled tests: three valid runs per load meeting PTC 50 criteria. Extended test: 100% of one-minute readings for 30 days.
	Voltage		0 to 600 V	457 to 498 V	± 1.0% reading	± 1.0% reading			
	Frequency		55 to 65 Hz	59.9 to 60.1 Hz	± 0.01% reading	± 0.01% reading			
	Current		0 to 400A	123 to 250 A	± 1.0% reading	± 1.0% reading			
	Voltage THD		0 to 100%	1.3 to 3.9%	± 1.0% full scale	± 1.0% full scale			
	Current THD		0 to 100%	0.0 to 40.1%	± 1.0% full scale	± 1.0% full scale			
	Power Factor		0 to 100%	86.1 to 100%	± 0.5% reading	± 0.5% reading			
Heat Recovery Rate	Inlet Temperature	Controlotron Model 1010EP	-18 to 149 °C	27 to 41 °C	Temps must be ± 0.8 °C of ref. Thermocouples, each	± 0.8 °C for delta T	Independent check with calibrated thermocouple		
	Outlet Temperature		-18 to 149 °C	65 to 89 °C					
	Water Flow		0 to 150 GPM	12 to 44 GPM	± 1.0% reading	± 0.1% reading	Biennial instrument calibration from manufacturer		
Ambient Conditions	Ambient Temperature	RTD / Vaisala Model HMD 60YO	-50 to 150 °F	70 to 93 °F	± 0.2 °F	± 0.2 °F	Instrument calibration from manufacturer prior to testing		
	Ambient Pressure	Setra Model 280E	0 to 25 psia	14.57 to 14.67 psia	± 0.1% full scale	± 0.05% full scale			
	Relative Humidity	Vaisala Model HMD 60YO	0 to 100% RH	19 to 65% RH	± 2%	± 0.2%			

(continued)

3-3

Table 3-2. Summary of Data Quality Indicator Goals and Results (continued)

Measurement Variable		Instrument Type / Manufacturer	Instrument Range	Measurement Range Observed	Accuracy			Completeness	
					Goal	Actual	How Verified / Determined	Goal	Actual
Fuel Input	Gas Flow Rate	Dresser-Roots Model 5M175 SSM Series B3 rotary displacement	0 to 83 scfm	9 to 59 scfm	1.0% of reading	± 0.5% of reading	Factory calibration with volume prover	Controlled tests: three valid runs per load meeting PTC 50 criteria. Extended test: 90% of one-minute readings for 2 weeks.	Controlled tests: three valid runs per load meeting PTC 50 criteria. Extended test: 100% of one-minute readings for 30 days.
	Gas Pressure	Omega Model PX205-030AI transducer	0 to 30 psia	14.8 to 16.3 psia	± 0.75% full scale	± 0.25% full scale, 0.075 psia, 0.5 % reading	Instrument calibration to NIST traceable standards		
	Gas Temperature	Omega TX-93 Type K thermocouple	0 to 200 °F	74 to 85 °F	± 0.10% full scale	± 0.10% full scale, 0.2 °F, 0.2 % reading			
	LHV	Gas Chromatograph / HP 589011	0 to 100% CH_4	60.9 to 61.9% CH_4	± 3.0% accuracy, ± 0.2% repeatability	± 0.5% accuracy, ± 0.05% repeatability	analysis of NIST-traceable CH_4 standard, and duplicate analysis on 3 samples	Controlled tests: two valid samples per load	Controlled tests: two valid samples per load
				547 to 556 Btu/scf	0.1% repeatability	± 0.05% repeatability	Conducted duplicate analyses on 3 samples		
Exhaust Stack Emissions	NO_X Levels	Chemiluminescent/ TECO 42 CH	0 to 2.5 ppm	0.05 to 0.53 ppm	± 2% full scale	≤ 2% full scale	Calculated following EPA Reference Method calibrations (Before and after each test run)	Controlled tests: three valid runs per load.	Controlled tests: three valid runs per load.
	CO Levels	NDIR / TECO Model 48	0 to 10 ppm	0.20 to 0.72 ppm	± 2% full scale	≤ 2% full scale			
	THC Levels	FID/California 300	0 to 100 ppmv	12 to 63 ppmv	± 5% full scale	≤ 5% reading			
	CH_4 Levels	GC/FID HP 5890	0 to 100 ppmv	15 to 64 ppmv	± 5% full scale	≤ 5% reading			
	O_2 Levels	Paramagetic/ Servomex	0 to 25%	8.7 to 20.2%	± 2% full scale	≤ 2% full scale			
	CO_2 Levels	NDIR/Servomex	0 to 20%	0.6 to 9.8%	± 2% full scale	≤ 2% full scale			

3-4

3.2.1. Power Output

Instrumentation used to measure power was introduced in Section 1.0 and included a Power Measurements Model 7500 ION. The data quality objective for power output was ± 1.5 percent of reading, which includes compounded error of the instrument and the CTs. The TQAP specified factory calibration of the ION meter with a NIST-traceable standard to determine if the power output DQO was met. The TQAP also required the GHG Center to perform several reasonableness checks in the field to ensure that the meter was installed and operating properly. The following summarizes the results.

The meter was factory calibrated by Power Measurements in April 2003. Calibrations were conducted in accordance with Power Measurements' standard operating procedures (in compliance with ISO 9002:1994) and are traceable to NIST standards. The meter was certified by Power Measurements to meet or exceed the accuracy values summarized in Table 3-2 for power output, voltage, current, and frequency. NIST-traceable calibration records are archived by the GHG Center. Pretest factory calibrations on the meter indicated that accuracy was within ± 0.05 percent of reading and this value, combined with the 1.0-percent error inherent to the current transformers resulted in an overall error of ± 1.0-percent. Using the manufacturer-certified calibration results and the average power output measured during the full-load testing, the error during all testing is determined to be ± 1.9 kW.

Additional QC checks were performed on the 7500 ION to verify the operation after installation of the meters at the site and prior to the start of the verification test. The results of these QC checks (summarized in Table 3-3) are not used to reconcile the DQI goals, but to document proper operation in the field. Current and voltage readings were checked for reasonableness using a hand-held Fluke multimeter. These checks confirmed that the voltage and current readings between the 7500 ION and the Fluke were within the range specified in the TQAP as shown in Table 3-3.

These results led to the conclusion that the 7500 ION was installed and operating properly during the verification test. The ± 1.0-percent error in power measurements, as certified by the manufacturer, was used to reconcile the power output DQO (discussed above) and the electrical efficiency DQO (discussed in Section 3.2.2).

Table 3-3. Results of Additional QA/QC Checks				
Measurement Variable	**QA/QC Check**	**When Performed/Frequency**	**Expected or Allowable Result**	**Results Achieved**
Power Output	Sensor diagnostics in field	Beginning and end of test	Voltage and current checks within ± 1% reading	± 0.2% voltage ± 0.9% current
	Reasonableness checks	Throughout test	Readings should be around 180 to 200 kW net power output at full load	Readings were 193 kW
Fuel Flow Rate	Differential Rate Test	Beginning and end of test	± 10% of expected differential pressure	Results satisfactory
Fuel Heating Value	Calibration with gas standards by laboratory	Prior to analysis of each lot of samples submitted	± 1.0% for each gas constituent	Results satisfactory, see Section 3.2.2.4
	Independent performance checks with blind audit sample	Twice during previous year	± 3.0% for each major gas constituent (methane, CO_2)	
Heat Recovery Rate	Meter zero check	Prior to testing	Reported flow rate < 0.1 GPM	0.03 GPM recorded
	Independent performance check of temperature readings	Beginning of test period	Difference in temperature readings should be < 1.5 °F	Temperature readings within 0.8 °F of reference.

3.2.2. Electrical Efficiency

The DQO for electrical efficiency was to achieve an uncertainty of ± 1.6 percent or less at full load. Recall from Equation 1 (Section 1.4.1) that the electrical efficiency determination consists of three direct measurements: power output, fuel flow rate, and fuel LHV. The accuracy goals specified to meet the electrical efficiency DQO consisted of ± 1.0 percent for power output, ± 1.0 percent for fuel flow rate, and ± 0.2 percent for LHV. The achieved accuracies for each measurement are compounded to determine overall accuracy of the reported efficiency. The methodology for compounding errors of multiple measurements (i.e., the square root of the sum of the squares) is detailed in the TQAP and not repeated here. The following sections summarize actual errors achieved in the contributing measurements and the overall compounded error.

Power Output: As discussed in Section 3.2.1, factory calibrations of the 7500 ION with a NIST-traceable standard and the inherent error in the current and potential transformers resulted in ± 1.0-percent error in power measurements. Reasonableness checks in the field verified that the meter was functioning properly. The average power output at full load was measured to be 193 kW and the measurement error is determined to be ± 1.9 kW.

Heat Input: The DQI goal for fuel flow rate was reconciled through calibration of the gas meter and the gas temperature and pressure sensors used to correct measured gas volumes to standard conditions. All three components were calibrated with NIST-traceable standards. As shown in Table 3-2, the individual instruments errors were 0.5, 0.5, and 0.2 percent for flow, pressure, and temperature respectively. The overall error in ADG flow rate then is 0.7 percent of reading. Therefore, the average flow rate at full load was 53.0 scfm with a measurement error of ± 0.39 scfm. Complete documentation of data quality results for fuel flow rate is provided in Section 3.2.2.3.

Uncertainty in the ADG LHV results was 3 percent (Section 3.2.2.4). The average LHV during testing was 552 Btu/scf and the measurement error corresponding to this heating value is ± 16 Btu/scf. The heat input compounded error then is ± 53.0 10^3Btu/hr, or 3.1 percent relative error at the average measured heat input of 1,766 10^3Btu/hr.

The errors in the divided values compound similarly for the electrical efficiency determination. The electrical power measurement error is ± 1.0 percent relative (Table 3-2) and the heat input error is ± 3.1 percent relative. Therefore, compounded relative error for the electrical efficiency determination at full load is 36.8 ± 1.2 percent, or a relative compounded error of 3.3 percent. This level of uncertainty exceeds the DQO for this parameter, primarily due to the conservative estimate of uncertainty in the LHV determination.

3.2.2.1. PTC-50 Requirements for Electrical Efficiency Determination

PTC-50 guidelines state that efficiency determinations were to be performed within 60 minute test periods in which maximum variability in key operational parameters did not exceed specified levels. Table 3-4 summarizes the maximum permissible variations observed in power output, ambient temperature, ambient pressure, ADG pressure at the meter, and ADG temperature at the meter for each test run. The table shows that the PTC-50 requirements for all parameters other than ADG flow rate were met for all test runs. Several of the ADG flow rate variabilities exceeded the ± 2% criterion. PC25C operations were very stable during testing as indicated by the low variability in power output and fuel heat content, so these variabilities are believed to be caused by the low resolution of the gas meter transmitter signal. In any case, the variability in this measurement is not expected to impact the 60 minute average values, or the subsequent the efficiency determinations.

Table 3-4. Variability in Operating Conditions

	Maximum Observed Variation[a] in Measured Parameters				
	Power Output (kW)	**Ambient Temp. (^{o}F)**	**Ambient Pressure (psia)**	**ADG Pressure (psia)**	**ADG Flow Rate (scfm)**
Maximum Allowable Variation	**± 2 %**	**± 5 ^{o}F**	**± 1 %**	**± 2 %**	**± 2 %**
Run 1	0.04	1.7	0.07	0.51	2.0
Run 2	0.02	2.3	0.07	0.52	1.9
Run 3	0.04	2.6	0.06	0.53	2.6
Run 4	0.06	1.9	0.06	0.29	2.2
Run 5	0.07	2.6	0.07	0.26	2.6
Run 6	0.04	2.4	0.11	0.28	2.3
Run 7	0.03	1.8	0.11	0.22	3.2
Run 8	0.05	2.0	0.08	0.23	2.5
Run 9	0.05	1.9	0.11	0.31	4.0

[a] Maximum (Average of Test Run – Observed Value) / Average of Test Run · 100

3.2.2.2. Ambient Measurements

Ambient temperature, relative humidity, and barometric pressure at the site were monitored throughout the extended verification period and the controlled tests. The instrumentation used is identified in Table 3-2 along with instrument ranges, data quality goals, and data quality achieved. All three sensors were factory-calibrated using reference materials traceable to NIST standards. The pressure sensor was

calibrated prior to the verification testing, confirming the ± 0.1 percent accuracy. The temperature and relative humidity sensors were also calibrate within a year prior to testing which verified that the ± 0.2 °F accuracy goal for temperature and ± 2 percent accuracy goal for relative humidity were met.

3.2.2.3. Fuel Flow Rate

The Dresser-Roots Model 5M175 rotary displacement gas meter was factory-calibrated in April 2003 prior to installation at the Red Hook site. Calibration records were obtained and reviewed to ensure that the ± 1.0-percent instrument accuracy goal was satisfied. Roots meter calibrations are permanent, indicating that this meter's accuracy is ± 0.5 percent.

Following manufacturer guidelines, a differential rate test was conducted on the meter in the field. The differential pressure across the meter was measured using a manometer while operating the PC25C on ADG. Two flow rates were checked and the measured differential pressure agreed with the meter performance curves at both points.

Finally, an ADG calibration curve was developed in the field to account for bias introduced by the pulse counter signal transmitter and data acquisition system (DAS). A 4-point calibration was conducted where manual meter index readings were compared to electronic ADG flow rate data logged by the DAS. The data were used to develop a linear equation which was applied to the average ADG flow rates logged during the controlled test periods. The correlation coefficient of the 4 point calibration curve was 0.9996.

3.2.2.4. Fuel Lower Heating Value

Full documentation of ADG sample collection date, time, run number, and canister ID was recorded and laboratory chain of custody forms were shipped along with the samples. Copies of the chain of custody forms and results of the analyses are stored in the GHG Center project files. Collected samples were shipped to Empact Analytical Laboratories of Brighton, CO, for compositional analysis and determination of LHV per ASTM test Methods D1945 and D3588, respectively. The DQI goals were to measure methane concentrations within ± 3.0 percent of a NIST-traceable blind audit sample and to achieve less than ± 0.2 percent difference in LHV duplicate analyses results. Blind audits were submitted to Empact on two similar verifications within the past year to evaluate analytical accuracy on the methane analyses [13, 14]. Both audits indicated analytical accuracy within 0.5 percent for the methane determination, and LHV repeatability of within ± 0.2 percent. Since the same sampling and analytical procedures were used here by the same analyst, the audit was not repeated a third time. As such, a uncertainty in the LHV determination of ± 3.0 percent is assigned.

In addition to the blind audit samples, duplicate analyses were conducted on three of the samples collected during the controlled test periods. Duplicate analysis is defined as the analysis performed by the same operating procedure and using the same instrument for a given sample volume. Results of the duplicate analyses showed an average analytical repeatability of 0.05 percent for methane and 0.05 percent for LHV.

3.2.3. Heat Production and Thermal Efficiency

Several measurements were conducted to determine heat production and thermal efficiency. These measurements include water flow rate, water supply and return temperatures, and heat input. The individual errors in each of the measurements are then propagated to determine the overall error in heat-recovery rate and efficiency. The Controlotron ultrasonic heat meter was used to continuously monitor water flow rate for the cooling module loop. This meter has a NIST-traceable factory-calibrated accuracy of ± 1.0 percent of reading. A zero check was also performed on the meter. The meter readings were 0.03 GPM or less with the circulation loop shut down.

The two temperature sensors used to measure delta T were calibrated against a reference thermocouple with NIST-traceable accuracy. This resulted in a single point estimate of bias in the delta T determination of 0.8 °C. This absolute error equates to an error of 1.6 percent relative to the average delta T measured during the full load testing (about 49 °C). The overall error in heat recovery and removal rate is then the combined error in flow rate and temperature differential. The heat recovery and removal rate determination, therefore, has a relative compounded error of ± 1.9 percent. The absolute error in the average heat recovery and removal rate at full power (994 x 10^3Btu/hr) then is ± 18.9 x 10^3Btu/hr.

Average thermal efficiency at full load is the compounded error in heat-recovery rate and the heat input error (3.1 percent), or 56.9 ± 2.1 percent, or a relative compounded error of 3.7 percent. This level of uncertainty exceeds the DQO for this parameter, again primarily due to the conservative estimate of uncertainty in the LHV determination.

3.2.4. Total Efficiency

Total efficiency is the sum of the electrical power and thermal efficiencies. For this test, total efficiency at full load is calculated as 36.8 ± 1.2 percent (± 3.3-percent relative error) plus 56.9 ± 2.1 percent (± 3.7-percent relative error). This is based on the determined errors in electrical and thermal efficiency at the full power setting. The total potential CHP efficiency at full load is then 93.8 ± 2.4 percent, or 2.5 percent relative error. This compounded relative slightly exceeds the data quality objective for this parameter.

3.2.5. Exhaust Stack Emission Measurements

EPA reference method requirements form the basis for the DQIs specified in the TQAP and listed in Tables 3-1 and 3-2. Each method specifies sampling and calibration procedures and data quality checks. These specifications, when properly implemented, ensure the collection of high quality and representative emissions data. The specific sampling and calibration procedures vary by method and class of pollutants, and are summarized in Table 3-5. The table lists the method quality requirements, the acceptable criteria, and the results for the test conducted here. It is generally accepted that conformance to the reference method quality requirements demonstrates that the qualitative DQIs have been met.

All of the emissions testing and reference method quality control procedures were conducted by the emissions testing contractor either in the field during testing or in their calibration and analytical laboratories. All of the field sampling procedures and calibrations were closely monitored by GHG Center personnel. In addition, documentation of all sampling and analytical procedures, data collection, and calibrations have been procured, reviewed, and filed by the GHG Center. Table 3-5 is followed by a brief explanation of the QA/QC procedures implemented for each class of pollutant quantified during this verification.

Table 3-5. Summary of Emissions Testing Calibrations and QC Checks				
Measurement Variable	**Calibration/QC Check**	**When Performed/Frequency**	**Expected or Allowable Result**	**Result of Calibration(s) or Check(s)**
NO_X	NO_2 to NO converter efficiency test	Once before testing	Efficiency > 90%	Efficiency 99.8%
	Analysis of audit gas		± 5% of reading	± 4% of reading
NO_X, CO, THC, CO_2, and O_2 concentrations	Analyzer calibration error test	Daily before testing	± 2% of analyzer span	All within allowable level for each day
	System bias checks	Before each test run	± 5% of analyzer span	All within allowable level for each test run
	Calibration drift test	After each test run	± 3% of analyzer span	
CH_4 concentrations	Triplicate injections	Each test run	± 5% difference	All within allowable level for each test run
	Calibration of GC with gas standards by certified laboratory	Immediately prior to sample analyses and/or at least once per day	± 5% for each compound	All within allowable level for each day
Exhaust gas volumetric flow rate	Pitot tube dimensional calibration / inspection	Once before and once after testing	See 40CFR60 Method 2, Section 10.0	Calibration criteria met
	Thermocouple calibration	Once after testing	± 1.5% of average stack temperature	Within 0.3% of reference TC

3.2.5.1. NO_X, CO, THC, CO_2, and O_2 Concentrations

Test personnel performed sampling system calibration error tests prior to each test run. All calibrations employed a suite of three EPA Protocol No. 1 calibration gases (four for CO) that spanned the instrument ranges. Appropriate calibration ranges were selected for each pollutant based on exhaust gas screening (ranges are summarized in Table 3-2). The daily analyzer calibration error goal for each instrument was ± 2.0 percent of span. It was met for each analyzer during each day of testing.

Sampling system bias was evaluated for each parameter at the beginning of each test run using the zero and mid-level calibration gases. System response to the zero and mid-level calibration gases also provided a measure of drift and bias at the end of each test run. The maximum allowable sampling system bias and drift values were ± 5 and ± 3 percent of span, respectively. These specifications were met for each parameter and for each test run.

Testers performed a NO_X converter efficiency test as described in Section 3.5 of the TQAP. The converter efficiency was 99.8 percent, which meets the 98-percent goal specified in the method. They also followed EPA Method 205 field evaluation procedures which specifies that gas concentrations will be within ± 2.0 percent of the predicted value after dilution.

As expected, NO_X emissions were very low (1 ppm or less). To evaluate the NO_X sampling system accuracy at low concentrations, an EPA Protocol 1 calibration gas with a certified NO_X concentration of 2.50 ppm in N_2 was diluted 50:50 (using the Method 205 dilution system) with another Protocol 1 calibration gas of 17.9 % CO_2 in N_2. This audit gas allowed the Center to simultaneously evaluate NO_X sampling system accuracy and CO_2 quenching bias. The resulting calibration gas mixture was 1.25 ppm NO_X and 8.95 % CO_2. System response was 1.2 ppm for NO_X and 9.0 % for CO_2, both within the ± 5% criteria.

3.2.5.2. CH_4 Concentrations

The TQAP specified EPA Method 18 for determining stack gas methane concentrations. Test operators injected calibration gas standards into the GC to establish a concentration standard curve prior to sample analysis. The operator repeated the injections until the average of all desired compounds from three separate injections agreed to within 5.0 percent of the certified value. The acceptance criterion was met for all runs.

The analysts injected the mid-range standard to quantify instrument drift at the completion of each test. The analyst would repeat the calibration process used for the average of the two calibration curves to determine concentrations if he observed a variance larger than 5.0 percent.

3.2.5.3. Exhaust Gas Volumetric Flow Rate

Reference Methods 1 through 4, used for determination of exhaust gas volumetric flow rate, include numerous quality control/quality assurance procedures that are required to ensure collection of representative data. The most important of these procedures are listed in Table 3-5 along with the results for these tests. These methods do not specify overall uncertainties, but it is generally accepted that conformance to the control/quality assurance procedures will result in an overall method uncertainty ranging from around 5 to 20 percent [15].

4.0 TECHNICAL AND PERFORMANCE DATA SUPPLIED BY UTC FUEL CELLS

Note: This section provides an opportunity for UTC Fuel Cells to provide additional comments concerning the GPU System and its features not addressed elsewhere in the Report. The GHG Center has not independently verified the statements made in this section.

UTC Fuel Cells PC25C has under gone emissions testing by independent organizations numerous times in the past. Below is a summary of these previous test results:

Independently Reported Emissions Levels
Lb/MWhr, at 200 kW

Source	NOx	CO	THC	CH4	NMHC	CO2
Rex Tech [1]	0.019	0.002	0.020	0.020	0.007	1295
Airtech [2]	0.064	<0.002	0.019	0.018		
TRC [3]	0.019	<0.012	<0.011 [4]	0.003	<0.008	
ETV [5]	0.013	0.029	0.78	0.80		1437

1. Test Report of Emissions from a PC25C Fuel Cell at the Connecticut Juvenile Training School, Middletown, CT
   Rex Technical Services, LLC, C-11-05, CJTS Report Addendum, October, 2002

2. Report on Natural Gas Fuel Emission Testing, Conducted on the ONSI PC25C 200 kW Fuel Cell for Concurrent Technologies Corporation, Johnstown, PA,
   Airtech Environmental Services Inc., Report No. 1179-1, March 10, 2000

3. Waste Water Digester/Fuel Cell Power Plant Energy Recovery Demonstration: Yonkers Joint Waste Water Treatment Plant
   TRC Environmental Corporation, Project No. 22817, October, 1998

4. THC not measured; sum of CH4 + NMHC shown in this table for comparison.

5. This report

These sets of tests indicate much higher levels of THC and CH4 reported by ETV than in previous testing. UTC Fuel Cells recognizes the level of difficulty in measuring and accounting for background levels of these constituents; oftentimes the ambient environment contains higher levels than that in the power plant exhaust. Indeed the PC25C at the Red Hook facility is located indoors in a room with other industrial equipment, and SRI has recognized this site installation can impact the results.

In addition to the above, the published UTC Fuel Cells PC25C Design and Application Guide tabulates emissions as part of the overall power plant specification. In this spec, combined emissions for NOx + CO + SOx + NMHC + Particulates is 0.04 lb/MWhr and CO2 emissions is 1164 lb/MWhr.

5.0 REFERENCES

[1] Southern Research Institute, *Test and Quality Assurance Plan – Electric Power and Heat Production Using the UTC PC25C Fuel Cell Power Plant and Anaerobic Digester Gas,* SRI/USEPA-GHG-QAP-26, www.sri-rtp.com, Greenhouse Gas Technology Center, Southern Research Institute, Research Triangle Park, NC. January 2004.

[2] American Society of Mechanical Engineers, *Performance Test Code for Fuel Cell Power Systems, ASME PTC-50*, New York, NY. 2002.

[3] American National Standards Institute / American Society of Heating, Refrigeration, and Air-conditioning Engineers, *Method of Testing Thermal Energy Meters for Liquid Streams in HVAC Systems*, ANSI/ASHRAE 125-1992, Atlanta, GA. 1995.

[4] American Society for Testing and Materials, *Standard Test Method for Analysis of Natural Gas by Gas Chromatography*, ASTM D1945-98, West Conshohocken, PA. 2001.

[5] American Society for Testing and Materials, *Standard Practice for Calculating Heat Value, Compressibility factor, and Relative Density of Gaseous Fuels,* ASTM D3588-98. West Conshohocken. PA. 2001.

[6] Southern Research Institute, *Environmental Technology Verification Report: UTC Fuel Cells PC25C Power Plant – Gas Processing Unit Performance for Anaerobic Digester Gas,* SRI/USEPA-GHG-QAP-26B, www.sri-rtp.com, Greenhouse Gas Technology Center, Southern Research Institute, Research Triangle Park, NC. September 2004.

[7] American National Standards Institute, ANSI / Institute of Electrical and Electronics Engineers, *IEEE, Master Test Guide for Electrical Measurements in Power Circuits*, ANSI/IEEE Std. 120-1989, New York, NY. October. 1989.

[8] American National Standards Institute, ANSI / Institute of Electrical and Electronics Engineers, *IEEE, Recommended Practices and Requirements for Harmonic Control in Electrical Power Systems*, IEEE Std. 519-1992, New York, NY. April. 1993.

[9] American National Standards Institute, ANSI / Institute of Electrical and Electronics Engineers, *National Standards for Electric Power Systems and Equipment – Voltage Ratings (Hertz),* ANSI C84.1-1995. American National Standards Institute, National Electrical Manufacturers Association, Rosslyn, VA. 1996.

[10] U.S. Environmental Protection Agency, Code of Federal Regulations, Title 40, Part 60, *New Source Performance Standards, Appendix A*, U.S. EPA, Washington, DC, 1999.

[11] U.S. Environmental Protection Agency, Compilation *of Air Pollutant Emission Factors AP-42, Fifth Edition, Volume I (4th Edition)*, U.S. EPA, Research Triangle Park, NC, 1995.

[12] Southern Research Institute, *Environmental Technology Verification Report: Electric Power Generation Using a Phosphoric Acid Fuel Cell on a Municipal Solid Waste Landfill Gas Stream*, SRI/USEPA-GHG-VR-01, www.sri-rtp.com, Greenhouse Gas Technology Center, Southern Research Institute, Research Triangle Park, NC. August 1998.

[13] Southern Research Institute, *Environmental Technology Verification Report: Combined Heat and Power at a Commercial Supermarket – Capstone 60 kW Microturbine CHP System*, SRI/USEPA-GHG-VR-27, www.sri-rtp.com, Greenhouse Gas Technology Center, Southern Research Institute, Research Triangle Park, NC. September 2003.

[14] Southern Research Institute, *Environmental Technology Verification Report: Residential Electric Power Generation Using the Plug Power SU1 Fuel Cell System*, SRI/USEPA-GHG-VR-25, www.sri-rtp.com, Greenhouse Gas Technology Center, Southern Research Institute, Research Triangle Park, NC. September 2003.

[15] Shigehara, R.T., *Measurement Uncertainty of Selected EPA Test Methods*, Emission Monitoring, Inc., Presented at Stationary Source Sampling and Analysis for Air Pollutants XXV Conference, March 2001.