SRI/USEPA-GHG-VR-26B
September 2004

Environmental Technology Verification Report

UTC Fuel Cells PC25C Power Plant – Gas Processing Unit Performance for Anaerobic Digester Gas

Prepared by:

Greenhouse Gas Technology Center
Southern Research Institute

Under a Cooperative Agreement With
U.S. Environmental Protection Agency

and

Under Agreement With
New York State Energy Research and Development Authority

EPA REVIEW NOTICE

This report has been peer and administratively reviewed by the U.S. Environmental Protection Agency, and approved for publication. Mention of trade names or commercial products does not constitute endorsement or recommendation for use.

THE ENVIRONMENTAL TECHNOLOGY VERIFICATION PROGRAM

U.S. Environmental Protection Agency

SOUTHERN RESEARCH INSTITUTE

ETV Joint Verification Statement

TECHNOLOGY TYPE:	Carbon Based Digester or Sour Gas Processing System
APPLICATION:	Anaerobic Digester Gas
TECHNOLOGY NAME:	Gas Processing Unit (GPU)
COMPANY:	US Filter/Westates Carbon
ADDRESS:	Lowell, Massachusetts
E-MAIL:	mcdonoughl@usfilter.com

The U.S. Environmental Protection Agency (EPA) has created the Environmental Technology Verification (ETV) program to facilitate the deployment of innovative or improved environmental technologies through performance verification and dissemination of information. The goal of the ETV program is to further environmental protection by accelerating the acceptance and use of improved and cost-effective technologies. ETV seeks to achieve this goal by providing high-quality, peer-reviewed data on technology performance to those involved in the purchase, design, distribution, financing, permitting, and use of environmental technologies.

ETV works in partnership with recognized standards and testing organizations, stakeholder groups that consist of buyers, vendor organizations, and permitters, and with the full participation of individual technology developers. The program evaluates the performance of technologies by developing test plans that are responsive to the needs of stakeholders, conducting field or laboratory tests, collecting and analyzing data, and preparing peer-reviewed reports. All evaluations are conducted in accordance with rigorous quality assurance protocols to ensure that data of known and adequate quality are generated and that the results are defensible.

The Greenhouse Gas Technology Center (GHG Center), one of six verification organizations under the ETV program, is operated by Southern Research Institute in cooperation with EPA's National Risk Management Research Laboratory. The GHG Center has collaborated with the New York State Energy and Development Authority (NYSERDA) to evaluate the performance of several combined heat and power (CHP) systems. One such technology is the PC25CC Fuel Cell Power Plant (PC25CC) offered by United Technologies Corporation (UTC) Fuel Cells. The PC25C is a phosphoric acid fuel cell capable of producing nominal 200 kW of electrical power with the potential to produce an additional 205 kW of heat. The PC25C selected for this verification is fueled by anaerobic digester gas (ADG) produced at a

water pollution control plant (WPCP). The PC25C tested includes a gas processing unit (GPU) that treats the ADG prior to use as a fuel. Under a partnership between NYSERDA, New York Power Authority (NYPA), and others, a total of eight fully interconnected PC25C systems are being installed at four WPCPs in Brooklyn, New York. Each system will be fueled with ADG generated from anaerobic digestion of sewage sludge, and each system will incorporate a dedicated GPU to process the gas. The GPUs used by UTC Fuel Cells are manufactured by US Filter/Westates Carbon. This verification statement provides the results of the GPU performance verification. A separate verification statement and report was issued for the PC25C performance evaluation.

TECHNOLOGY DESCRIPTION

The PC25C fuel cell generates electricity through an electrochemical process in which the energy stored in a fuel is converted into alternating current (AC) electricity. The unit has a rated generating capacity of nominal 200 kW at 480 volts. Electrical efficiency of the PC25C averages 35 to 40 percent, but total system efficiency can rise to over 80 percent if the waste heat is reused in a cogeneration system. A detailed description of the PC25C fuel cell system and power module can be found in both the Test and Quality Assurance Plan and the PC25C Verification Report. The following GPU description is based on information provided by UTC Fuel Cells and US Filter/Westates and does not represent verified information

Prior to use as a fuel, the raw ADG is processed using an integrated GPU. The GPU is electrically integrated with the PC25C such that the fuel cell provides power and startup and shutdown control to the GPU. The GPU includes a variable speed gas blower that is used to pressurize low pressure ADG fuel supply as needed to overcome the GPU pressure drop. PC25C fuel pressure sensors and electronics are used to control GPU blower speed. The GPU is designed primarily to remove hydrogen sulfide (H_2S) from the ADG because its presence in concentrations greater than 6 ppm can be damaging to the PC25C. The GPU can also remove other potentially harmful ADG components such as other sulfur species and hydrocarbons.

The GPU consists of three major components including a coalescing filter, activated carbon beds, and the blower. The coalescing filter removes water vapor and entrained particulates from the raw gas. The GPU is equipped with liquid traps to remove condensed water from the fuel supply line. Collected and condensed water is piped back into the waste water treatment system at the plant.

The dry ADG is then directed to two 1,200 lb carbon beds in series to capture H_2S and other harmful contaminants. Each bed is designed to operate for approximately six months with ADG containing up to 200 ppm H_2S. The system is configured with the capability to operate using a single bed when a bed needs to be changed out. Periodic monitoring of the H_2S levels in the raw and processed ADG is conducted manually by system operators. Additionally, periodic sampling of the carbon beds is conducted to evaluate the condition of the carbon.

VERIFICATION DESCRIPTION

Testing was conducted at the Red Hook WPCP – a 60-million gallon per day secondary wastewater treatment facility in Brooklyn, New York. Two PC25C fuel cell systems were installed at the Red Hook WPCP in May of 2003 to provide on-site generation of power and hot water.

The ADG is produced at the Red Hook facility using a series of anaerobic sludge digesters and is typically composed of 60 to 65 percent methane with a lower heating value (LHV) of 550 to 650 Btu/cf. The system is designed to switch to natural gas fuel whenever ADG methane concentrations are less than around 50 percent, or ADG pressure is below 3 inches water column. Gas production rates at the facility

vary depending on daily plant wastewater flow rates and ambient temperatures. Peak production rates during the summer months can approach 750 cubic feet per minute. Approximately 6,000 cubic feet per hour of the ADG is needed to operate both PC25C's at this site at full power. During times when ADG production rates at the plant exceed this level, the excess gas is combusted using an enclosed flare.

Testing was conducted on May 19 and 20, 2004. Testing was conducted to evaluate GPU performance by comparing the composition and quality of raw ADG to that of processed ADG. The following gas compositional and quality criteria were evaluated on six raw and six corresponding processed ADG samples:

- Gas properties (gross and net heating value, density, and compressibility)
- Gas composition (N_2, O_2, CO_2, and C_1 through C_6)
- Sulfur compounds
- Volatile Organic Compounds (VOCs) and total halides
- Moisture content

Corresponding ADG samples were collected on both the upstream and downstream sides of the GPU and submitted for analysis. Results of the analyses were used to evaluate GPU removal efficiency for moisture, H_2S and sulfur compounds, VOCs, and halides. The results also allowed the center to evaluate the effects on ADG composition and heating value.

The GPU performance verification testing was completed in conjunction with the CHP efficiency testing that was conducted on the PC25C. The efficiency testing was performed at three different fuel cell power output commands including full power (about 193 kW), 150 kW, and 100 kW.

Quality Assurance (QA) oversight of the verification testing was provided following specifications in the ETV Quality Management Plan (QMP). The GHG Center's QA manager conducted an audit of data quality on at least 10 percent of the data generated during this verification and a review of the report. Data review and validation was conducted at three levels including the field team leader (for data generated by subcontractors), the project manager, and the QA manager. Through these activities, the QA manager has concluded that the data meet the data quality objectives that are specified in the Test and Quality Assurance Plan.

VERIFICATION OF PERFORMANCE

ADG Composition and Heating Value (Table S-1)

- There was very little variation in the composition and physical properties of both the raw and processed ADG samples. The raw ADG was almost entirely CH_4 and CO_2 (62.25 and 37.60 percent-dry basis, respectively), with a small amount of N_2 (0.14 percent) and trace levels of H_2S (93 ppm) and VOCs. The data indicate that the GPU introduces a slight dilution of ADG with air (required for H_2S removal), but the basic gas composition is otherwise unchanged.

- The slight dilution of the gas reduces the average CH_4 concentration by about 1.4 percent, and subsequently, the fuel heating value is reduced by the same amount on a volumetric basis. The gas compositional changes are consistent across the range of ADG flow rates measured during the three different test conditions. The density and compressibility of the gas is virtually unchanged by processing.

Table S-1. Composition and Properties of Raw and Processed ADG (dry basis)

Sample ID	Gas Composition (%)			Heat Content (Btu/scf)		Relative Density	Compres-sibility
	CH_4	CO_2	N_2	HHV	LHV		
Raw ADG 1	62.39	37.45	0.15	622.6	560.4	0.919	0.9969
Processed ADG 1	61.66	37.27	0.88	615.3	553.8	0.921	0.9969
Change (%)	-1.18	-0.48	82.95	-1.19	-1.19	0.25	0.00
Raw ADG 2	62.23	37.59	0.15	621.1	559.0	0.920	0.9969
Processed ADG 2	60.87	36.76	1.89	607.4	546.7	0.922	0.9970
Change (%)	-2.23	-2.26	92.06	-2.26	-2.25	0.23	0.01
Raw ADG 3	62.18	37.67	0.15	620.5	558.5	0.921	0.9969
Processed ADG 3	61.55	37.17	1.04	614.2	552.8	0.921	0.9969
Change (%)	-1.02	-1.35	85.58	-1.03	-1.03	0.02	0.01
Raw ADG 4	62.56	37.26	0.17	624.3	561.9	0.917	0.9969
Processed ADG 4	61.83	36.89	1.04	617.0	555.3	0.918	0.9969
Change (%)	-1.18	-1.00	83.65	-1.18	-1.19	0.12	0.00
Raw ADG 5	62.14	37.73	0.12	620.1	558.1	0.921	0.9969
Processed ADG 5	61.20	37.17	1.31	610.7	549.7	0.923	0.9969
Change (%)	-1.54	-1.51	90.84	-1.54	-1.53	0.13	0.01
Raw ADG 6	61.99	37.90	0.11	618.6	556.8	0.923	0.9968
Processed ADG 6	61.13	37.35	1.23	610.0	549.1	0.924	0.9969
Change (%)	-1.41	-1.47	91.06	-1.41	-1.40	0.09	0.01
Avg. Raw ADG	**62.24**	**37.60**	**0.14**	**621.2**	**559.1**	**0.920**	**0.9969**
Avg. Processed ADG	**61.37**	**37.10**	**1.23**	**612.4**	**551.2**	**0.921**	**0.9969**
Avg. Change (%)	**-1.43**	**-1.34**	**87.69**	**-1.43**	**-1.43**	**0.14**	**0.01**

Sulfur Compounds Removal Efficiency (Table S-2)

Table S-2. GPU Removal Efficiency for Sulfur Compounds

Sample ID	Sulfur Compounds Detected (concentrations in ppb)	
	Hydrogen sulfide	Carbon disulfide
Raw ADG 1	83,000	1,200
Processed ADG 1	< 4.0	38
Removal Efficiency (%)	> 99.995	96.8
Raw ADG 2	100,000	1,400
Processed ADG 2	< 4.0	35
Removal Efficiency (%)	> 99.996	97.5
Raw ADG 3	96,500	800
Processed ADG 3	< 4.0	38
Removal Efficiency (%)	> 99.996	95.3
Average Removal Efficiency (%)	**> 99.996**	**96.5**

- The only sulfur compounds detected in measurable quantities in the raw ADG samples were H_2S and carbon disulfide.

- Concentrations of H_2S ranged from 83 to 100 ppm. Based on processed ADG sample results below the analytical detection limit of 4.0 ppb for H_2S, the average removal efficiency is greater than 99.996 percent. GPU removal efficiency for carbon disulfide averaged 96.5 percent. Breakthrough of carbon disulfide was limited to 37 ppb.

VOCs Removal Efficiency (Table S-3)

- A total of 22 VOCs were detected in each of the raw ADG samples. Of these, 12 were found in concentrations of 50 ppb or greater, as summarized in Table S-3. Ten other VOCs were detected in low or trace amounts in the raw ADG samples. None of the 10 trace compounds were detectable in the processed ADG samples.

- Concentrations of toluene averaged approximately 2,200 ppb in the raw ADG and were higher than the remaining VOCs combined. GPU removal efficiency for toluene averaged 99.90 percent. Removal efficiencies for the nine remaining alkanes and alkenes detected in the raw ADG samples were generally greater than 96 percent.

- GPU removal efficiencies for vinyl chloride and acetone averaged 17.5 and 59.6 percent, respectively. Still, breakthrough of these two compounds was limited to 130 and 15 ppb, respectively. Vinyl chloride and 1,2-dichloroethene were the only two halides detected in the raw ADG samples. Total halide removal efficiency averaged 65 percent.

ADG Moisture Content

Raw and processed ADG temperatures were relatively low during the test periods ranging from 77 to 82 ^{o}F. Subsequently, moisture content ranged from 15.5 to 23.0 milligrams per liter (mg/l). As such, removal of condensed water by the GPU was not required.

Table S-3. GPU Removal Efficiency for Volatile Organic Compounds

	Primary Volatile Organic Compounds Detected (concentrations in ppb)											
Sample ID	**Vinyl chloride**	**Acetone**	**cis-1,2 Dichloroethene**	**Benzene**	**Heptane**	**Toluene**	**Ethyl benzene**	**m,p-Xylene**	**Propyl benzene**	**4-Ethyltoluene**	**1,3,5-Trimethylbenzene**	**1,2,4-Trimethylbenzene**
Raw ADG 1	160	25	100	46	65	1,700	80	44	40	210	61	84
Processed ADG 1	125	17	< 1.4	< 1.4	< 1.4	2.0	< 1.4	< 1.4	< 1.4	< 1.4	< 1.4	< 1.4
Removal Efficiency (%)	21.9	32.0	> 98.6	> 97.0	> 97.8	99.9	> 98.3	> 96.8	> 96.5	> 99.3	> 97.7	> 98.3
Raw ADG 2	140	40	110	52	69	2,500	93	49	55	285	96	160
Processed ADG 2	130	17	< 1.8	< 1.8	< 1.8	2.3	< 1.8	< 1.8	< 1.8	< 1.8	< 1.8	< 1.8
Removal Efficiency (%)	7.1	57.5	> 98.4	> 96.5	> 97.4	99.9	> 98.1	> 96.3	> 96.7	> 99.4	> 98.1	> 98.9
Raw ADG 3	170	120	120	51	72	2,500	100	54	56	310	100	180
Processed ADG 3	130	13	< 1.4	< 1.4	< 1.4	2.1	< 1.4	< 1.4	< 1.4	< 1.4	< 1.4	< 1.4
Removal Efficiency (%)	23.5	89.2	> 98.8	> 97.3	> 98.1	99.9	> 98.6	> 97.4	> 97.5	> 99.5	> 98.6	> 99.2
Average Removal Efficiency (%)	**17.5**	**59.6**	**> 98.6**	**> 96.9**	**> 97.8**	**99.9**	**> 98.3**	**> 96.9**	**> 96.9**	**> 99.4**	**> 98.1**	**> 98.8**

Details on the verification test design, measurement test procedures, and Quality Assurance/Quality Control (QA/QC) procedures can be found in the Test Plan titled *Test and Quality Assurance Plan – Electric Power and Heat Generation Using the UTC PC25C Fuel Cell Power Plant and Anaerobic Digester Gas* (SRI 2004). Detailed results of the verification are presented in the final report titled *Environmental Technology Verification Report for The UTC Fuel Cells PC25C Power Plant – Gas Processing Unit Performance for Anaerobic Digester Gas* (SRI 2004). Both can be downloaded from the GHG Center's web-site (www.sri-rtp.com) or the ETV Program web-site (www.epa.gov/etv).

Signed by Lawrence W. Reiter, Ph.D. 9/15/04

Lawrence W. Reiter, Ph.D.
Acting Director
National Risk Management Research Laboratory
Office of Research and Development

Signed by Stephen D. Piccot 9/10/04

Stephen D. Piccot
Director
Greenhouse Gas Technology Center
Southern Research Institute

Notice: GHG Center verifications are based on an evaluation of technology performance under specific, predetermined criteria and the appropriate quality assurance procedures. The EPA and Southern Research Institute make no expressed or implied warranties as to the performance of the technology and do not certify that a technology will always operate at the levels verified. The end user is solely responsible for complying with any and all applicable Federal, State, and Local requirements. Mention of commercial product names does not imply endorsement or recommendation.

EPA REVIEW NOTICE

This report has been peer and administratively reviewed by the U.S. Environmental Protection Agency, and approved for publication. Mention of trade names or commercial products does not constitute endorsement or recommendation for use.

SRI/USEPA-GHG-VR-26B
September 2004

Greenhouse Gas Technology Center

A U.S. EPA Sponsored Environmental Technology Verification (ETV) Organization

Environmental Technology Verification Report

UTC Fuel Cells PC25CC Power Plant – Gas Processing Unit Performance for Anaerobic Digester Gas

Prepared By:
Greenhouse Gas Technology Center
Southern Research Institute
PO Box 13825
Research Triangle Park, NC 27709 USA
Telephone: 919/806-3456

Under EPA Cooperative Agreement R 82947801
and NYSERDA Agreement 7009

U.S. Environmental Protection Agency
Office of Research and Development
National Risk Management Research Laboratory
Air Pollution Prevention and Control Division
Research Triangle Park, NC 27711 USA

EPA Project Officer: David A. Kirchgessner
NYSERDA Project Officer: Richard Drake

TABLE OF CONTENTS

Page

LIST OF FIGURES ..... **iii**
LIST OF TABLES ..... **iii**
ACKNOWLEDGMENTS ..... **iv**
ACRONYMS AND ABBREVIATIONS ..... **v**

1.0 INTRODUCTION **1-1**
1.1. BACKGROUND 1-1
1.2. GAS PROCESSING UNIT TECHNOLOGY DESCRIPTION 1-2
1.3. RED HOOK WPCP DESCRIPTION AND SYSTEM INTEGRATION 1-4
1.4. PERFORMANCE VERIFICATION OVERVIEW 1-5
1.4.1. Anaerobic Digester Gas Composition and Physical Properties 1-5
1.4.2. Anaerobic Digester Gas Sulfur and VOC Compounds 1-6
1.4.3. Anaerobic Digester Gas Temperature and Moisture Content 1-6

2.0 VERIFICATION RESULTS **2-1**
2.1. ANAEROBIC DIGESTER GAS COMPOSITION AND PHYSICAL PROPERTIES 2-1
2.2. ANAEROBIC DIGESTER GAS SULFUR COMPOUNDS AND VOCs 2-3
2.3. ANAEROBIC DIGESTER GAS MOISTURE CONTENT 2-5

3.0 DATA QUALITY ASSESSMENT **3-1**
3.1. DATA QUALITY OBJECTIVES 3-1
3.2. ANAEROBIC DIGESTER GAS COMPOSITION AND HEATING VALUE 3-1
3.3. ANAEROBIC DIGESTER GAS SULFUR AND VOC CONTENT 3-2
3.4. ANAEROBIC DIGESTER GAS MOISTURE CONTENT 3-3

4.0 TECHNICAL AND PERFORMANCE DATA SUPPLIED BY US FILTER/WESTATES CARBON **4-1**

5.0 REFERENCES **5-1**

LIST OF FIGURES

		Page
Figure 1-1	PC25C System Schematic	1-3
Figure 1-2	The US Filter/Westates Carbon GPU at Red Hook WPCP	1-4
Figure 2-1	ADG Composition Before and After the GPU	2-2

LIST OF TABLES

		Page
Table 2-1	Summary of ADG Sample Collection	2-1
Table 2-2	Composition and Properties of Raw and Processed ADG	2-2
Table 2-3	GPU Removal Efficiency for Sulfur Compounds	2-3
Table 2-4	GPU Removal Efficiency for Volatile Organic Compounds	2-4
Table 2-5	ADG Moisture Content	2-5
Table 3-1	Summary of ADG VOCs QA/QC Checks	3-2
Table 3-2	Summary of ADG Sulfur Compounds QA/QC Checks	3-3

ACKNOWLEDGMENTS

The Greenhouse Gas Technology Center wishes to thank NYSERDA, especially Richard Drake and Mark Torpey, for reviewing and providing input on the testing strategy and this Verification Report. Thanks are also extended to the New York Power Authority (NYPA), especially Joe Maki, for their input supporting the verification and their assistance with coordinating field activities. Finally, thanks go out to New York City's Environmental Protection staff at the Red Hook Water Pollution Control Plant for hosting the test.

ACRONYMS AND ABBREVIATIONS

ADG	anaerobic digester gas
ADQ	Audit of Data Quality
ANSI	American National Standards Institute
APPCD	Air Pollution Prevention and Control Division
ASME	American Society of Mechanical Engineers
ATL	Air Toxics, Ltd.
Btu	British thermal units
Btu/scf	British thermal units per standard cubic feet
C1	quantification of methane
CCV	continuing calibration verification
CH_4	methane
CHP	combined heat and power
CO_2	carbon dioxide
DC	direct current electricity
DG	distributed generation
DOE	U.S. Department of Energy
DQO	data quality objective
EPA	Environmental Protection Agency
ETV	Environmental Technology Verification
°F	degrees Fahrenheit
ft^3	cubic feet
GC	gas chromatograph
GHG Center	Greenhouse Gas Technology Center
GPU	gas processing unit
HHV	higher heating value
HRSG	heat recovery steam generator
H_2S	hydrogen sulfide
ICAL	initial calibration
ISO	International Standards Organization
kW	kilowatts
lb	pounds
LCS	laboratory control sample
LHV	lower heating value
MGD	million gallons per day
mol	molecular
N_2	nitrogen
NIST	National Institute of Standards and Technology
NYPA	New York Power Authority
NYSERDA	New York State Energy Research and Development Authority
O_2	oxygen
ORD	Office of Research and Development
PC25C	PC25C Fuel Cell Power Plant

(continued)

ACRONYMS/ABBREVIATIONS
(continued)

PEA	Performance Evaluation Audit
ppb	parts per billion
ppm	parts per million
psia	pounds per square inch, absolute
psig	pounds per square inch, gauge
QA/QC	Quality Assurance/Quality Control
QMP	Quality Management Plan
scf	standard cubic feet
scfh	standard cubic feet per hour
scfm	standard cubic feet per minute
Southern	Southern Research Institute
TQAP	Test and Quality Assurance Plan
TSA	technical systems audit
UTC	United Technologies Corporation
VOCs	volatile organic compounds

1.0 INTRODUCTION

1.1. BACKGROUND

The U.S. Environmental Protection Agency's Office of Research and Development (EPA-ORD) operates the Environmental Technology Verification (ETV) program to facilitate the deployment of innovative technologies through performance verification and information dissemination. The goal of ETV is to further environmental protection by accelerating the acceptance and use of improved and innovative environmental technologies. Congress funds ETV in response to the belief that there are many viable environmental technologies that are not being used for the lack of credible third-party performance data. With performance data developed under this program, technology buyers, financiers, and permitters in the United States and abroad will be better equipped to make informed decisions regarding environmental technology purchase and use.

The Greenhouse Gas Technology Center (GHG Center) is one of six verification organizations operating under the ETV program. The GHG Center is managed by EPA's partner verification organization, Southern Research Institute (Southern), which conducts verification testing of promising greenhouse gas mitigation and monitoring technologies. The GHG Center's verification process consists of developing verification protocols, conducting field tests, collecting and interpreting field and other data, obtaining independent peer-reviewed input, and reporting findings. Performance evaluations are conducted according to externally reviewed verification Test and Quality Assurance Plans (TQAP) and established protocols for quality assurance.

The GHG Center is guided by volunteer groups of stakeholders. These stakeholders guide the GHG Center as to which technologies are most appropriate for testing, on how to help disseminate results, and in reviewing Test Plans and Technology Verification Reports (Report). The GHG Center's Executive Stakeholder Group consists of national and international experts in the areas of climate science and environmental policy, technology, and regulation. It also includes industry trade organizations, environmental technology finance groups, governmental organizations, and other interested groups. The GHG Center's activities are also guided by industry specific stakeholders who provide guidance on the verification testing strategy related to their area of expertise and peer-review key documents prepared by the GHG Center.

A technology area of interest to some GHG Center stakeholders is distributed electrical power generation (DG), particularly with combined heat and power (CHP) capability. DG refers to electricity generation equipment, typically ranging in size from 5 to 1,000 kilowatts (kW), that provides electric power at a customer's site. A DG unit can be connected directly to the customer or to a utility's transmission and distribution (T&D) system. Examples of technologies available for DG include gas turbine generators, internal combustion engine generators (gas, diesel, other), photovoltaics, wind turbines, fuel cells, and microturbines. DG technologies provide customers one or more of the following main services: standby generation (i.e., emergency backup power), peak shaving generation (during high-demand periods), base-load generation (constant generation), and CHP generation. An added environmental benefit of some DG technologies is the ability to fuel these systems with renewable energy sources such as anaerobic digester gas (ADG) or landfill gas. These gases, when released to atmosphere, contribute millions of tons of methane emissions annually in the U.S. Cost-effective technologies are available that can stem this emission growth by recovering methane and using it as an energy source.

The GHG Center and the New York State Energy Research and Development Authority (NYSERDA) have agreed to collaborate and share the cost of verifying several new DG technologies located throughout the State of New York. One such technology is the PC25C Fuel Cell Power Plant (PC25C) offered by United Technologies Corporation (UTC) Fuel Cells. The PC25C is a phosphoric acid fuel cell capable of producing nominal 200 kW of electrical power with the potential to produce an additional 205 kW of heat. The PC25C selected for this verification is fueled by ADG produced at a water pollution control plant (WPCP). The PC25C verified here includes a gas processing unit (GPU) that treats the ADG prior to use as a fuel. Under a partnership between NYSERDA, New York Power Authority (NYPA), and others, a total of eight fully interconnected PC25C systems are being installed at four WPCPs in Brooklyn, New York. Each system will be fueled with ADG generated from anaerobic digestion of sewage sludge, and each system will incorporate a dedicated GPU to process the gas. The GPUs used by UTC Fuel Cells are manufactured by US Filter/Westates Carbon. The PC25C and GPU system selected for this verification is located at the Red Hook WPCP operated by the New York City Department of Environmental Protection.

The GHG Center evaluated the performance of the PC25C and the unit's GPU at the Red Hook facility in June 2004. This report presents the results of the GPU performance verification. Results of the PC25C performance verification can be found in a separate verification statement and report titled *Environmental Technology Verification Report – Electric Power and Heat Generation Using the UTC PC25C Fuel Cell Power Plant and Anaerobic Digester Gas* [1]. It can be downloaded from the GHG Center's web-site (www.sri-rtp.com) or the ETV Program web-site (www.epa.gov/etv).

Details on the verification test design, measurement test procedures, and Quality Assurance/Quality Control (QA/QC) procedures can be found in the TQAP titled *Test and Quality Assurance Plan- Electric Power and Heat Generation Using the UTC PC25C Fuel Cell Power Plant and Anaerobic Digester Gas* [2]. It can also be downloaded from the web-sites noted above. The TQAP describes the rationale for the experimental design, the testing and instrument calibration procedures planned for use, and specific QA/QC goals and procedures. The TQAP was reviewed and revised based on comments received from NYSERDA, NYPA, and the EPA Quality Assurance Team. The TQAP meets the requirements of the GHG Center's Quality Management Plan (QMP) and satisfies the ETV QMP requirements.

The remainder of Section 1.0 describes the GPU system technology and test facility and outlines the performance verification procedures that were followed. Section 2.0 presents test results, and Section 3.0 assesses the quality of the data obtained. Section 4.0, submitted by US Filter/Westates Carbon, presents additional information regarding the CHP system. Information provided in Section 4.0 has not been independently verified by the GHG Center.

1.2. GAS PROCESSING UNIT TECHNOLOGY DESCRIPTION

The PC25C fuel cell generates electricity through an electrochemical process in which the energy stored in a fuel is converted into alternating current (AC) electricity. The unit has a rated generating capacity of nominal 200 kW at 480 volts. Electrical efficiency of the PC25C averages 35 to 40 percent, but total system efficiency can rise to over 80 percent if the waste heat is reused in a cogeneration system. Figure 1-1 provides a simple schematic of the PC25C system and its three major components and is followed by a brief description of the GPU. A detailed description of the PC25C fuel cell system and power module can be found in both the TQAP and the PC25C Verification Report.

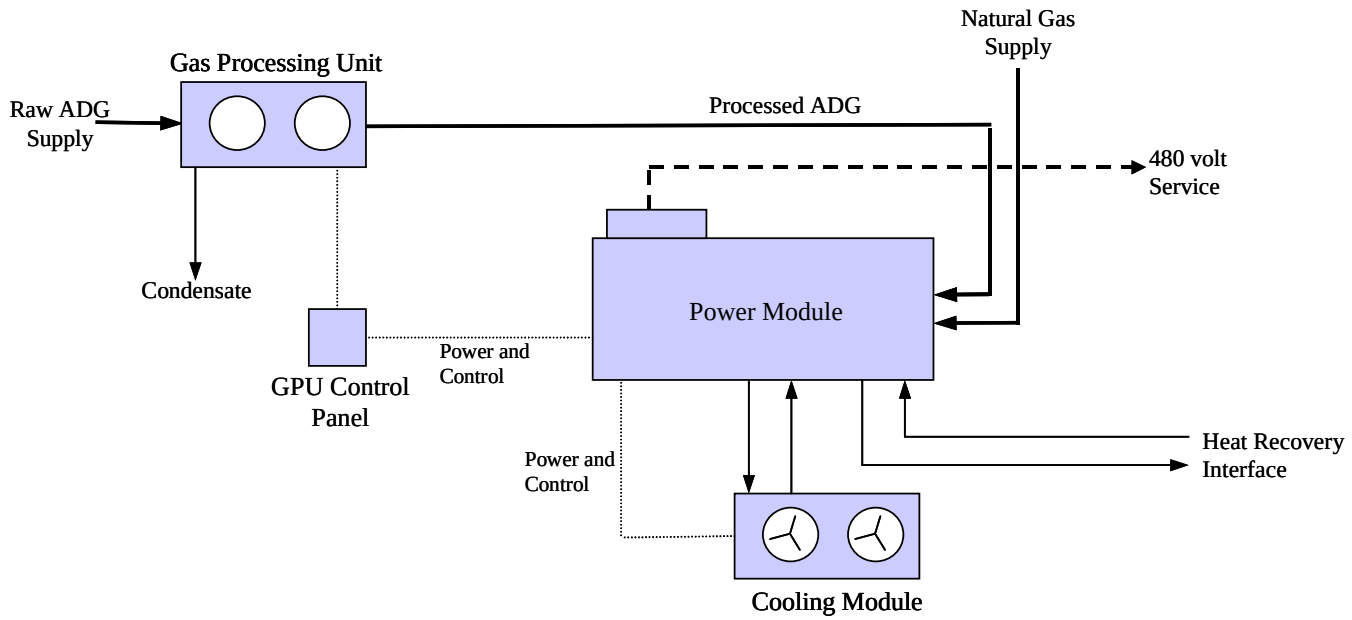

Figure 1-1. PC25C System Schematic

Prior to use as a fuel, the raw ADG is processed using an integrated GPU. The GPU used here is manufactured by US Filter/Westates Carbon and is specifically designed for integration with the PC25C (shown in Figure 1-2). The GPU is electrically integrated with the PC25C such that the fuel cell provides power and startup or shutdown control to the GPU. The GPU includes a variable speed gas blower that is used to pressurize low pressure ADG fuel supply as needed to overcome GPU pressure drop. PC25C fuel pressure sensors and electronics are used to control GPU blower speed. The GPU is designed primarily to remove hydrogen sulfide (H_2S) from the ADG because its presence is damaging to the PC25C. The GPU can also remove other potentially harmful ADG components such as other sulfur species and hydrocarbons and has a drip leg to remove condensed water.

The GPU consists of three major components including a coalescing filter, activated carbon beds, and the blower. The coalescing filter removes water vapor and entrained particulates from the raw gas. The GPU is equipped with liquid traps to remove condensed water from the fuel supply line. Collected and condensed water is piped back into the waste water treatment system at the plant.

The dry ADG is then directed to two 1,200 lb carbon beds in series to capture H_2S and other harmful contaminants. Each bed is designed to operate for approximately six months with ADG containing up to 200 ppm H_2S. The system is configured with the capability to operate using a single bed when a bed needs to be changed out. Periodic monitoring of the H_2S levels in the raw and processed ADG is conducted manually by system operators. Additionally, periodic sampling of the carbon beds is conducted to evaluate the condition of the carbon.

Figure 1-2. The US Filter/Westate Carbon GPU at Red Hook WPCP

1.3. RED HOOK WPCP DESCRIPTION AND SYSTEM INTEGRATION

The Red Hook WPCP is a 60-million gallons per day (MGD) secondary wastewater treatment facility located at 63 Flushing Avenue in Brooklyn, New York. Two PC25C fuel cell systems were installed at the Red Hook WPCP in May of 2003 to provide on-site generation of power and hot water.

The Red Hook facility currently purchases power from the local utility [Consolidated Edison (ConEd)] to meet its entire electrical demand. Facility heat demand for process heat, space heating, and hot water production varies by season, but averages around 11.0 x 10^6 Btu/hr in winter months and 7.20 x 10^6 Btu/hr in summer months. Heat demand is met under normal site operations using low-pressure steam supplied by an adjacent cogeneration facility. The cogeneration facility (owned and operated by Cogeneration Technologies, Inc.) is a 286 MW combined-cycle gas-fired turbine and steam turbine equipped with a heat recovery steam generator (HRSG) capable of producing 800,000 lb/hr steam. A small fraction of the steam produced at the facility is directed to the Red Hook WPCP to meet the process heat, space heating, and hot water production demands. Total annual steam flow to the Red Hook site has averaged approximately 54.4 x 10^6 lb/yr during the past three years, representing less than one percent of the cogeneration facility's steam generation capacity.

Each of the two fuel cells includes a dedicated GPU and is configured to use either natural gas or ADG produced at the site as fuel. ADG is the primary fuel under normal site operations with natural gas used only during fuel cell startup or as a backup fuel during digester upset conditions.

The ADG is produced at the Red Hook facility using a series of anaerobic sludge digesters and is typically composed of 60 to 65 percent methane with a lower heating value (LHV) of 550 to 650 Btu/cf. Preliminary ADG composition data collected at the site indicate that methane concentrations as low as 40 percent are rare, but possible. The system is designed to switch to natural gas fuel whenever methane concentrations are less than around 50 percent or ADG pressure is less than 3 inches w.c. Gas production rates at the facility will also vary depending on daily plant wastewater flow rates and ambient temperatures. Peak production rates during the summer months can approach 750 cubic feet per minute. Approximately 6,000 cfh of the ADG is needed to operate both PC25C's at full power. During times when ADG production rates at the plant exceed this level, the excess gas is combusted using an enclosed flare.

1.4. PERFORMANCE VERIFICATION OVERVIEW

Testing was conducted to evaluate GPU performance by comparing the composition and quality of raw ADG to that of processed ADG. The following gas compositional and quality criteria were evaluated on raw and processed ADG samples:

- Gas properties (gross and net heating value, density, and compressibility)
- Gas composition (N_2, O_2, CO_2, and C_1 through C_6)
- Sulfur compounds
- Volatile organic compounds (VOCs) and total halides
- Moisture content

Corresponding ADG samples were collected on both the upstream and downstream sides of the GPU and submitted for analysis. Results of the analyses were used to evaluate GPU removal efficiency for moisture, H_2S and sulfur compounds, VOCs, and halides. The results also allowed the center to evaluate the effects of the GPU on ADG composition and heating value.

The GPU performance verification testing was completed in conjunction with the CHP efficiency testing that was conducted on the PC25C. The efficiency testing was performed at three different fuel cell power output commands including full power (about 193 kW), 150 kW, and 100 kW. Gas flow rate through the GPU (and consumed by the PC25C) was measured during all test periods using a Dresser Roots Series B3, Model 5M175 rotary meter and logged electronically as 1-minute averages.

Sections 1.3.1 through 1.3.3 briefly describe the verification ADG sampling and analytical procedures. Detailed descriptions of the sample collection, handling, custody, and analytical procedures that were followed during this verification can be found in the TQAP.

1.4.1. Anaerobic Digester Gas Composition and Physical Properties

During the PC25C efficiency tests, a total of six processed ADG samples were collected (two samples at each of the three power commands). To evaluate GPU performance, six corresponding raw ADG samples were collected during these tests. Samples were collected in 600 ml stainless steel canisters and submitted to Empact Analytical Systems, Inc., of Brighton, CO for analysis. Compositional analysis was conducted in accordance with ASTM Specification D1945 for quantification of methane (C1) to hexane

plus (C6+), nitrogen, oxygen, and carbon dioxide [3]. The compositional data were then used in conjunction with ASTM Specification D3588 to calculate LHV, relative density, and compressibility of the gas [4].

1.4.2. Anaerobic Digester Gas Sulfur and VOC Compounds

For evaluation of GPU sulfur and VOC removal performance, three sets of corresponding raw and processed ADG samples were collected in 1-liter Tedlar bags (all on the second day of testing to minimize sample holding times). These samples were submitted to Air Toxics, Ltd. of Folsom, California (ATL) for VOC and sulfur compounds analysis. The VOC analyses were conducted in accordance with EPA Method TO-15 [5], and the sulfur compounds analyses were conducted using ASTM Method 5504 [6]. Collected samples were protected from light and express shipped to the laboratory for next day analysis. Method 5504 recommends that bag samples be analyzed for sulfur compounds within 24 hours of collection. The actual holding time for samples collected here was approximately 32 hours because of shipping time constraints.

A total of 63 VOCs are included in the analysis with individual compound reporting limits ranging from 6.2 to 25 ppb for the raw ADG samples and 1.4 to 5.6 ppb for the processed ADG samples (reporting limits are defined as the value that can be accurately detected for any particular analyte on each instrument). Results of the TO-15 analyses were used to compute halide concentrations. This is done by summing the products of the concentration of each halide species detected and the number of halide atoms per mole of each species (e.g., 10 ppbv of carbon tetrachloride will contribute 40 ppbv to the total halide concentration reported).

A total of 20 sulfur compounds are included in the analysis with individual compound reporting limits of 800 ppb for raw ADG samples and 4.0 ppb for processed ADG.

1.4.3. Anaerobic Digester Gas Temperature and Moisture Content

GHG Center personnel determined ADG moisture content in the field using ASTM D4888-88 [7]. A total of five corresponding moisture determinations were conducted on the raw and processed ADG at the same sampling locations where canister and bag samples were collected. A Drager measurement system including a hand pump and Drager detector tubes was used. The detector tubes provide moisture content in units of milligrams per liter (mg/l) at the specified conditions.

A single ADG temperature sensor was located near the gas flow meter to continuously monitor ADG temperature during the verification period. Temperatures were logged electronically as 1-minute averages. To verify that these measurements are representative of the sampled ADG, three manual temperature readings were taken at the raw ADG sampling port (outdoors) and compared to the electronically logged gas temperature near the processed ADG sampling port (indoors). All readings agreed within 1.2 ^{o}F, indicating that the logged processed ADG temperature data is representative of raw ADG temperatures during the test periods.

2.0 VERIFICATION RESULTS

The verification testing was conducted on May 19 and 20, 2004. ADG sampling was conducted in conjunction with the PC25C efficiency verification testing. The GPU carbon beds had approximately 2,900 hours of operation prior to starting this testing, and were therefore well within the expected 6 month carbon lifespan. The sampling matrix and basic ADG flow rate characteristics are summarized in Table 2-1.

Table 2-1. Summary of ADG Sample Collection

PC25C Operating Condition	Average ADG Flow Rate (scfm)	Average ADG Temp. (^{o}F)	Sample ID	Date (Time) Collected
Full load, or 193 kW	53.02	81.5	Raw ADG Canister 1	5/19/04 (0905)
			Processed ADG Canister 1	5/19/04 (0910)
			Processed ADG Canister 2	5/19/04 (1300)
			Raw ADG Canister 2	5/19/04 (1315)
75 percent load, or 152 kW	40.32	80.4	Processed ADG Canister 3	5/19/04 (1600)
			Raw ADG Canister 3	5/19/04 (1605)
		77.5	Processed ADG Canister 4	5/20/04 (0900)
			Raw ADG Canister 4	5/20/04 (0910)
			Raw ADG Tedlar Bag 1	5/20/04 (0935)
			Processed ADG Tedlar Bag 1	5/20/04 (0940)
		77.4	Raw ADG Tedlar Bag 2	5/20/04 (1055)
			Processed ADG Tedlar Bag 2	5/20/04 (1100)
50 percent load, or 102 kW	27.80	77.4	Raw ADG Tedlar Bag 3	5/20/04 (1155)
			Processed ADG Tedlar Bag 3	5/20/04 (1200)
		77.4	Raw ADG Canister 5	5/20/04 (1230)
			Processed ADG Canister 5	5/20/04 (1235)
		77.1	Raw ADG Canister 6	5/20/04 (1600)
			Processed ADG Canister 6	5/20/04 (1605)

Collected samples were shipped to the appropriate laboratories along with proper chain of custody documentation (Empact Analytical for canister samples and Air Toxics Ltd. for bag samples), and were received in good condition. Results of ADG analyses were submitted to the GHG Center by the laboratories along with proper QA/QC analytical documentation (described in Section 3.0). Sections 2.1 through 2.4 summarize the results of the testing. The laboratory reports detailing sample analyses are on file at the GHG Center and available on request, but too voluminous for inclusion here.

2.1. ANAEROBIC DIGESTER GAS COMPOSITION AND PHYSICAL PROPERTIES

There was very little variation in the composition and physical properties of both the raw and processed ADG samples. Figure 2-1 shows the average ADG composition on a dry basis before and after GPU processing.

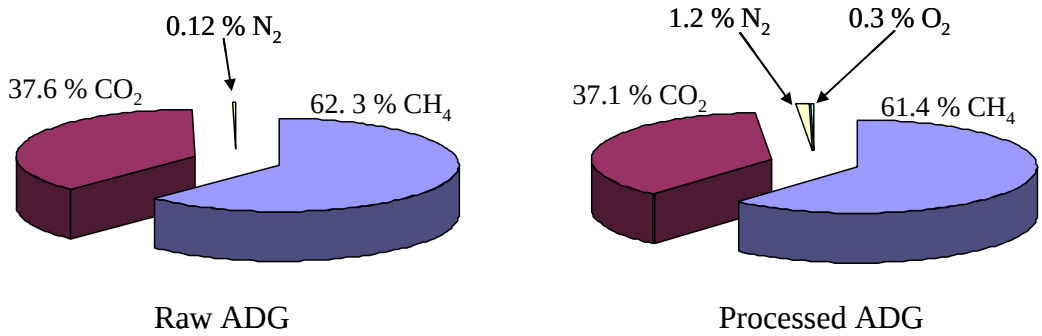

Figure 2-1. ADG Composition Before and After GPU (dry basis)

The raw ADG was almost entirely CH_4 and CO_2, with a small amount of N_2, and trace levels of H_2S and VOCs (see Section 2.2). The data indicate that the GPU introduces a slight dilution of ADG with air (which is required for H_2S removal), but the basic gas composition is otherwise unchanged.

Table 2-2 summarizes the composition of each raw and processed ADG sample. The summary includes the LHV, HHV, relative density, and compressibility of the raw and processed gas samples that were calculated based on the compositional analyses. The change in each of the gas properties is shown, along with the average change.

Table 2-2. Composition and Properties of Raw and Processed ADG (dry basis)

	Gas Composition (%)			Heat Content (Btu/scf)			
Sample ID	**CH_4**	**CO_2**	**N_2**	**HHV**	**LHV**	**Relative Density**	**Compres-sibility**
Raw ADG 1	62.39	37.45	0.15	622.6	560.4	0.919	0.9969
Processed ADG 1	61.66	37.27	0.88	615.3	553.8	0.921	0.9969
Change (%)	-1.18	-0.48	82.95	-1.19	-1.19	0.25	0.00
Raw ADG 2	62.23	37.59	0.15	621.1	559.0	0.920	0.9969
Processed ADG 2	60.87	36.76	1.89	607.4	546.7	0.922	0.9970
Change (%)	-2.23	-2.26	92.06	-2.26	-2.25	0.23	0.01
Raw ADG 3	62.18	37.67	0.15	620.5	558.5	0.921	0.9969
Processed ADG 3	61.55	37.17	1.04	614.2	552.8	0.921	0.9969
Change (%)	-1.02	-1.35	85.58	-1.03	-1.03	0.02	0.01
Raw ADG 4	62.56	37.26	0.17	624.3	561.9	0.917	0.9969
Processed ADG 4	61.83	36.89	1.04	617.0	555.3	0.918	0.9969
Change (%)	-1.18	-1.00	83.65	-1.18	-1.19	0.12	0.00
Raw ADG 5	62.14	37.73	0.12	620.1	558.1	0.921	0.9969
Processed ADG 5	61.20	37.17	1.31	610.7	549.7	0.923	0.9969
Change (%)	-1.54	-1.51	90.84	-1.54	-1.53	0.13	0.01
Raw ADG 6	61.99	37.90	0.11	618.6	556.8	0.923	0.9968
Processed ADG 6	61.13	37.35	1.23	610.0	549.1	0.924	0.9969
Change (%)	-1.41	-1.47	91.06	-1.41	-1.40	0.09	0.01
Avg. Raw ADG	**62.24**	**37.60**	**0.14**	**621.2**	**559.1**	**0.920**	**0.9969**
Avg. Processed ADG	**61.37**	**37.10**	**1.23**	**612.4**	**551.2**	**0.921**	**0.9969**
Avg. Change (%)	**-1.43**	**-1.34**	**87.69**	**-1.43**	**-1.43**	**0.14**	**0.01**

Figure 2-1 and Table 2-2 show that the slight dilution of the gas reduces the average CH_4 concentration by about 1.4 percent, and subsequently the fuel heating value is reduced by the same amount. The gas compositional changes are fairly uniform across the range of ADG flow rates measured during the three different test conditions. The density and compressibility of the gas is virtually unchanged by processing.

2.2. ANAEROBIC DIGESTER GAS SULFUR COMPOUNDS AND VOCs

All Tedlar bag samples for sulfur and VOCs analyses were received by the laboratory in good condition, and analyzed within 32 hours of collection. The only sulfur compounds detected in measurable quantities in the raw ADG samples were H_2S and carbon disulfide. Table 2-3 summarizes the concentrations of each compound before and after processing by the GPU, and the GPU removal efficiency for each.

Table 2-3. GPU Removal Efficiency for Sulfur Compounds

	Sulfur Compounds Detected (concentrations in ppb)	
Sample ID	**Hydrogen sulfide**	**Carbon disulfide**
Raw ADG 1	83,000	1,200
Processed ADG 1	< 4.0	38
Removal Efficiency (%)	> 99.995	96.8
Raw ADG 2	100,000	1,400
Processed ADG 2	< 4.0	35
Removal Efficiency (%)	> 99.996	97.5
Raw ADG 3	96,500	800
Processed ADG 3	< 4.0	38
Removal Efficiency (%)	> 99.996	95.3
Average Removal Efficiency (%)	**> 99.996**	**96.5**

Concentrations of H_2S in the raw ADG ranged from 83 to 100 ppm. All processed ADG sample concentrations were below the analytical detection limit of 4.0 ppb for H_2S. Therefore, the average removal efficiency is greater than 99.996 percent. GPU removal efficiency for carbon disulfide averaged 96.5 percent. Breakthrough of carbon disulfide was limited to 37 ppb.

A total of 22 VOCs included in the TO-15 analysis were detected in each of the raw ADG samples. Of these, 12 were found in concentrations of 50 ppb or greater. These 12 predominant VOCs are summarized in Table 2-4 along with the concentrations of each in the processed gas samples and the GPU removal efficiency for each. Ten other VOCs were detected in low or trace amounts in the raw ADG samples. None of the 10 trace compounds were detectable in the processed ADG samples.

Table 2-4. GPU Removal Efficiency for Volatile Organic Compounds

Sample ID	Primary Volatile Organic Compounds Detected (concentrations in ppb)											
	Vinyl chloride	**Acetone**	**cis-1,2 Dichloroethene**	**Benzene**	**Heptane**	**Toluene**	**Ethyl benzene**	**m,p-Xylene**	**Propyl benzene**	**4-Ethyltoluene**	**1,3,5-Trimethylbenzene**	**1,2,4-Trimethylbenzene**
Raw ADG 1	160	25	100	46	65	1,700	80	44	40	210	61	84
Processed ADG 1	125	17	< 1.4	< 1.4	< 1.4	2.0	< 1.4	< 1.4	< 1.4	< 1.4	< 1.4	< 1.4
Removal Efficiency (%)	21.9	32.0	> 98.6	> 97.0	> 97.8	99.9	> 98.3	> 96.8	> 96.5	> 99.3	> 97.7	> 98.3
Raw ADG 2	140	40	110	52	69	2,500	93	49	55	285	96	160
Processed ADG 2	130	17	< 1.8	< 1.8	< 1.8	2.3	< 1.8	< 1.8	< 1.8	< 1.8	< 1.8	< 1.8
Removal Efficiency (%)	7.1	57.5	> 98.4	> 96.5	> 97.4	99.9	> 98.1	> 96.3	> 96.7	> 99.4	> 98.1	> 98.9
Raw ADG 3	170	120	120	51	72	2,500	100	54	56	310	100	180
Processed ADG 3	130	13	< 1.4	< 1.4	< 1.4	2.1	< 1.4	< 1.4	< 1.4	< 1.4	< 1.4	< 1.4
Removal Efficiency (%)	23.5	89.2	> 98.8	> 97.3	> 98.1	99.9	> 98.6	> 97.4	> 97.5	> 99.5	> 98.6	> 99.2
Average Removal Efficiency (%)	**17.5**	**59.6**	**> 98.6**	**> 96.9**	**> 97.8**	**99.9**	**> 98.3**	**> 96.9**	**> 96.9**	**> 99.4**	**> 98.1**	**> 98.8**

Raw ADG concentrations of toluene averaged approximately 2,200 ppb and were higher than the remaining VOCs combined. GPU removal efficiency for toluene averaged 99.90 percent. Average removal efficiencies for the nine remaining alkanes and alkenes were greater than 96 percent.

GPU removal efficiencies for vinyl chloride and acetone were much lower, averaging only 17.5 and 59.6 percent, respectively. Still, breakthrough of these two compounds was limited to 130 and 17 ppb, respectively. Vinyl chloride and cis 1,2-dichloroethene were the only two halides detected in the raw ADG samples. Total halides concentrations averaged 377 and 131 ppb for the raw and processed ADG samples. Total halide removal efficiency averaged 65 percent.

2.3. ANAEROBIC DIGESTER GAS MOISTURE CONTENT

Table 2-5 summarizes the raw and processed ADG moisture content during the verification period. As noted earlier, gas temperatures measured at the ADG gas meter were determined to be representative of both raw and processed ADG temperatures at the sampling locations. Table 2-5 shows that ADG temperatures were also consistent throughout the testing ranging from 77.3 to 81.6 ^{o}F. The GPU is designed to remove only condensed water through the drip leg and water vapor in the ADG can actually enhance performance. At these temperatures, there was no condensed water in the ADG and therefore, essentially no GPU moisture removal was required or achieved.

Table 2-5. ADG Moisture Content (mg/l)

Sample ID	Gas Temp. (^{o}F)	Raw ADG (mg/l)	Processed ADG (mg/l)
Run 1	81.6	15.5	15.5
Run 2	81.6	16.0	16.0
Run 3	80.4	15.0	14.0
Run 4	77.7	18.0	18.0
Run 5	77.3	23.0	20.0
Average	**79.7**	**17.5**	**16.7**

3.0 DATA QUALITY ASSESSMENT

3.1. DATA QUALITY OBJECTIVES

The GHG Center selects methodologies and instruments for all verifications to ensure that the desired level of data quality in the final results is obtained. The GHG Center specifies DQOs for each verification parameter before testing starts and uses these goals as a statement of data quality. Ideally, quantitative DQOs are established based on the level of confidence in results needed by stakeholders or potential users of a technology. In some cases, such as this verification, quantitative DQOs are not well defined and therefore, qualitative DQOs are established.

During this verification, determination of each of the primary verification parameters was conducted based on published reference methods. The qualitative DQOs for this verification, then, are to meet all of the QA/QC requirements of each method. In some cases, the laboratory conducting the analyses has internal QA/QC checks that are performed in addition to the method requirements. The analytical methods used here were introduced in Section 1.3. Additional details regarding these methods can be found in the TQAP. A summary of the QA/QC requirements and results for each method are provided in the following sections.

This verification was supported by an Audit of Data Quality (ADQ) conducted by the GHG Center QA Manager. During the ADQ, the QA Manager randomly selected data supporting each of the primary verification parameters and followed the data through the analysis and data processing system. The ADQ confirmed that no systematic errors were introduced during data handling and processing.

A performance evaluation audit (PEA) was planned but not conducted. The planned PEA consisted of a blind audit of the analytical laboratory conducting the gas compositional analyses. Similar PEAs were submitted to Empact on two similar verifications within the past year to evaluate analytical accuracy on the methane analyses [8, 9]. These audits qualified as PEAs as required by the ETV QMP. Both audits indicated analytical accuracy within 0.5 percent, and repeatability of within ± 0.2 percent. Since the same sampling and analytical procedures were used here by the same laboratory analyst, the audit was not repeated a third time. This deviation from the TQAP was approved by the QA and Project Managers.

3.2. ANAEROBIC DIGESTER GAS COMPOSITION AND HEATING VALUE

For all ADG samples collected (Table 2-1), sample collection date, time, run number, and canister identification number were logged and laboratory chain of custody forms were completed and shipped with the samples. Copies of the chain of custody forms and results of the analyses are stored in the GHG Center project files. Collected samples were shipped to Empact for compositional analysis and determination of LHV per ASTM Methods D1945 and D3588. Empact maintains strict continuous calibration criteria on the instrumentation used for the compositional analyses using certified reference standards. Copies of these calibration data are stored in the GHG Center project files.

Duplicate analyses were conducted on three of the raw ADG samples and three of the processed ADG samples collected during the controlled test periods. Duplicate analysis is defined as the analysis performed by the same operating procedure and using the same instrument for a given sample volume. Results of the duplicate analyses showed an average analytical repeatability of 0.33 percent for both methane and LHV.

3.3. ANAEROBIC DIGESTER GAS SULFUR AND VOC CONTENT

ADG sample collection date, time, run number, and canister ID were logged and laboratory chain of custody forms were completed and shipped with the samples. Copies of the chain of custody forms and results of the analyses are stored in the GHG Center project files. Collected samples were shipped to Air Toxics for analysis. Like Empact, Air Toxics maintains strict continuous calibration criteria on the instrumentation used for these analyses using certified reference standards. The GHG Center has copies of these procedures on file. Other QA/QC criteria required by the methods and used by Air Toxics are summarized in Tables 3-2 and 3-3, along with the results achieved for these samples.

Table 3-1. Summary of ADG VOCs QA/QC Checks

QC Check	Minimum Frequency	Acceptance Criteria	Results Achieved
Five point instrument calibration (ICAL)	Prior to sample analysis	Relative standard deviation $\leq$ 30%	Results acceptable
Laboratory control sample (LCS)	After each ICAL	90 percent of the compounds quantified must be within 70 to 130% of expected values	All compounds within the range of 74 to 143% of expected values[a]
Continuing calibration verification (CCV)	Prior to sample analysis	90 percent of the compounds quantified must be within 70 to 130% of expected values	All compounds within the range of 78 to 122% of expected values
Laboratory blank	After the CCV	Results lower than reporting limit	All compounds below reporting limit
Surrogates	As each standard, blank, and sample is analyzed	70 to 130% surrogate recovery required	Recoveries ranged from 94 to 105% for all samples
Duplicate analyses	10% of the samples	Relative percent difference of $\leq$ 25% for compounds detected 5 times higher than reporting limits	Relative difference $\leq$ 25% for compounds detected

[a] Two compounds exceeded the LCS criteria, both of which were not detected in samples collected here.

The GHG Center obtained, reviewed, and archived documentation from Air Toxics that each of these QC checks were conducted and criteria were achieved. A detailed description of these QA/QC checks is provided in the TQAP.

Table 3-2. Summary of ADG Sulfur Compounds QA/QC Checks

QC Check	Minimum Frequency	Acceptance Criteria	Results Achieved
Five point instrument calibration (ICAL)	Prior to sample analysis	Relative standard deviation ≤ 30%	Results acceptable
Laboratory control sample (LCS)	After each ICAL	90 percent of the compounds quantified must be within 70 to 130% of expected values	All compounds within the range of 72 to 107% of expected values
Laboratory blank	After the ICAL	Results lower than reporting limit	All compounds below reporting limit
Duplicate analyses	10% of the samples	Relative percent difference of ≤ 25% for compounds detected 5 times higher than reporting limits	Relative difference ≤ 25% for compounds detected

3.4. ANAEROBIC DIGESTER GAS MOISTURE CONTENT

The DQO for ADG moisture determinations using the Drager chips will be evaluated by analyzing replicate samples. One back-to-back moisture sample was collected during the verification period as a check for the method's repeatability. The back-to-back sample was collected immediately after the preceding moisture sample, and both results were 16.0 mg/l. Using published gas saturation tables, the Center also determined that at the ADG temperatures measured, saturated gas would have moisture content of approximately 22 mg/l which is consistent with the data generated here using the detector tubes. It should be noted that only five moisture samples were collected at each sampling location instead of the planned six.

4.0 TECHNICAL AND PERFORMANCE DATA SUPPLIED BY US FILTER/WESTATES CARBON

Note: This section provides an opportunity for UTC Fuel Cells and US Filter/Westates Carbon to provide additional comments concerning the GPU System and its features not addressed elsewhere in the Report. The GHG Center has not independently verified the statement made in this section.

H.1.3. Gas Processing Unit (GPU)

The Gas Processing Unit (GPU) filters and pressurizes the ADG prior to entering the modified PC-25C Fuel Cell. The GPU uses two treated activated carbon beds to remove hydrogen sulfide from the ADG stream. The unit is sized to process up to 4800 standard cubic feet per hour of ADG with an average H_2S concentration of 200 ppm. The following table presents the ADG fuel inlet limits that were the design basis for the Gas Processing Unit (GPU). These limits represent the raw ADG Gas supply from the site that a Fuel Cell Installation can use.

Table H.2. PC-25 GPU Inlet Condition Limits

Item	Nominal Case	Individual Minimum	Individual Maximum
Major Fuel Constituent (%Wet)			
CH_4	60.8	50	100
CO_2	31.1	0	45
H_2O	5.5	0.7	5.5
N_2	2.5	0	2.5
O_2	0.1	0	0.3
Temperature (°F)	95	55	100
Pressure (iwg) *			
Boosted	8	3	20
Non Boosted	60	60	80
Contaminants			
H_2S (ppmv)	200	0	1500
Organic Sulfur (ppmv)	1	0	1
Halides (ppmv)	0	0	2
Ammonia (ppmv)	0	0	0.5
Olefins (%)	0	0	0.5
Liquid Water (pph)	1	0	2
Flow Rate (SCFM)	60		86

* Dependent on Blower Option

In addition to the 3" inlet and outlet gas lines, there are 0.5" condensate drain lines, which are required to be connected to a sanitary drain. The location and size of the GPU mechanical interfaces are located in UTCFC Drawing FC19520. The GPU stands eight foot high, and has an 8' x 10' foot print. When siting the GPU, be sure to maintain a 10' clearance between these units and any electrical/sparking devices. The GPU and the optional Gas Analysis Unit can be within 10' of each other.

Unpublished Work, Copyright 2003, UTC Fuel Cells

5.0 REFERENCES

[1] Southern Research Institute, *Environmental Technology Verification Report Report – Electric Power and Heat Generation Using the UTC PC25C Fuel Cell Power Plant and Anaerobic Digester Gas*, SRI/USEPA-GHG-VR-26, www.sri-rtp.com, Greenhouse Gas Technology Center, Southern Research Institute, Research Triangle Park, NC. September 2004.

[2] Southern Research Institute, *Test and Quality Assurance Plan - Electric Power and Heat Generation Using the UTC PC25C Fuel Cell Power Plant and Anaerobic Digester Gas*, SRI/USEPA-GHG-QAP-26, www.sri-rtp.com, Greenhouse Gas Technology Center, Southern Research Institute, Research Triangle Park, NC. January 2004.

[3] American Society for Testing and Materials, *Standard Test Method for Analysis of Natural Gas by Gas Chromatography*, ASTM D1945-98, West Conshohocken, PA. 2001.

[4] American Society for Testing and Materials, *Standard Practice for Calculating Heat Value, Compressibility factor, and Relative Density of Gaseous Fuels*, ASTM D3588-98. West Conshohocken, PA. 2001.

[5] USEPA, Compendium of Methods for the Determination of Toxic Organic Compounds in Ambient Air, *Compendium Method TO-15 - Determination of Volatile Organic Compounds (VOCs) In Air Collected in Specially Prepared Canister and Analyzed by Gas Chromatography/Mass Spectrometry (GC/MS)*. Center for Environmental Research Information, ORD, EPA. January 1997.

[6] American Society for Testing and Materials, *Standard Practice for Determination of Sulfur Compounds in Natural Gas by Gas Chromatography and Chemiluminescense*, ASTM D5504-01. West Conshohocken, PA. 2001.

[7] American Society for Testing and Materials, *Standard Practice for Determination of Moisture Content in Natural Gas by Stain Tube Detector*, ASTM D4888-88. West Conshohocken, PA, 2001.

[8] Southern Research Institute, *Environmental Technology Verification Report: Combined Heat and Power at a Commercial Supermarket – Capstone 60 kW Microturbine CHP System*, SRI/USEPA-GHG-QAP-27, www.sri-rtp.com, Greenhouse Gas Technology Center, Southern Research Institute, Research Triangle Park, NC. September 2003.

[9] Southern Research Institute, *Environmental Technology Verification Report: Residential Electric Power Generation Using the Plug Power SU1 Fuel Cell System*, SRI/USEPA-GHG-QAP-25, www.sri-rtp.com, Greenhouse Gas Technology Center, Southern Research Institute, Research Triangle Park, NC. September 2003.