SRI/USEPA-GHG-VR-29
August 2003

Environmental Technology Verification Report

ConocoPhillips
Fuel-Efficient High-Performance (FEHP) SAE 75W90 Rear Axle Gear Lubricant

Prepared by:

Greenhouse Gas Technology Center
Southern Research Institute

Under a Cooperative Agreement With
U.S. Environmental Protection Agency

EPA REVIEW NOTICE

This report has been peer and administratively reviewed by the U.S. Environmental Protection Agency, and approved for publication. Mention of trade names or commercial products does not constitute endorsement or recommendation for use.

THE ENVIRONMENTAL TECHNOLOGY VERIFICATION PROGRAM

U.S. Environmental Protection Agency

SOUTHERN RESEARCH INSTITUTE

ETV Joint Verification Statement

TECHNOLOGY TYPE:	Fuel Efficient Rear Axle Lubricant
APPLICATION:	Light-Duty Trucks and SUVs
TECHNOLOGY NAME:	ConocoPhillips Fuel-Efficient High-Performance (FEHP) SAE 75W90 Rear Axle Gear Lubricant
COMPANY:	ConocoPhillips
ADDRESS:	1000 S. Pine St., Ponca City, OK 74602
E-MAIL:	kay.k.bjornen@conocophillips.com

The U.S. Environmental Protection Agency (EPA) has created the Environmental Technology Verification (ETV) program to facilitate the deployment of innovative or improved environmental technologies through performance verification and dissemination of information. The goal of the ETV program is to further environmental protection by accelerating the acceptance and use of improved and cost-effective technologies. ETV seeks to achieve this goal by providing high-quality, peer-reviewed data on technology performance to those involved in the purchase, design, distribution, financing, permitting, and use of environmental technologies.

ETV works in partnership with recognized standards and testing organizations, stakeholder groups that consist of buyers, vendor organizations, and permitters, and with the full participation of individual technology developers. The program evaluates the performance of technologies by developing test plans that are responsive to the needs of stakeholders, conducting field or laboratory tests, collecting and analyzing data, and preparing peer-reviewed reports. All evaluations are conducted in accordance with rigorous quality assurance protocols to ensure that data of known and adequate quality are generated and that the results are defensible.

The Greenhouse Gas Technology Center (GHG Center), one of six verification organizations under the ETV program, is operated by Southern Research Institute in cooperation with EPA's National Risk Management Research Laboratory. The GHG Center has completed the performance verification of the ConocoPhillips Fuel-Efficient High-Performance (FEHP) Society of Automotive Engineers (SAE) 75W90 Rear Axle Gear Lubricant. This verification statement provides a summary of the test results for the lubricant.

TECHNOLOGY DESCRIPTION

The transportation sector accounted for approximately 32 percent of CO_2 emissions from fossil fuel combustion during 2001. The US EPA reports that in 2001, automobiles and light-duty trucks produced approximately 1.074×10^9 and 1.87×10^7 metric tons of carbon dioxide (CO_2) equivalents from the combustion of gasoline and diesel fuel, respectively. Combustion of gasoline and diesel fuel in automobiles and light-duty trucks was responsible for approximately 73 percent (57 percent from gasoline and 16 percent from diesel) of total transportation related CO_2 emissions in the US during 2001. Small fuel efficiency or emission rate improvements are expected to have a significant beneficial impact on nationwide greenhouse gas emissions because of the large quantity of fuel consumed.

ConocoPhillips has developed the Fuel-Efficient High-Performance (FEHP) SAE 75W90 Rear Axle Gear Lubricant in partnership with an axle manufacturer (Visteon Corporation) and an additive supplier (Ethyl Petroleum Additives, Ltd.). The product is marketed as a fuel efficient, high performance, multi-grade gear lubricant for light-duty trucks, automobiles, and sport utility vehicles (SUVs). ConocoPhillips states that the product consists of a lower viscosity, synthetic base lubricant with optimized fluidity and friction modifiers when compared to standard axle lubricants. The developers report incremental fuel economy improvements of 0.1 to 0.2 miles per gallon [mpg] with FEHP when compared to standard lubricants.

According to ConocoPhillips, the FEHP offers the following benefits:

- **Improved axle efficiency,**
- **Reduced temperature under severe towing,**
- **Reduced spin losses, and**
- **Improved thermal and oxidative stability.**

ConocoPhillips claims that the properties of the FEHP, including product durability, allow it to be a replacement for standard SAE 75W140 rear axle gear lubricant typically specified by some automobile manufacturers in light-duty trucks with FEHP rated at 75W90. Table 1 summarizes typical FEHP physical properties as provided by ConocoPhillips.

Table 1: FEHP Fluid Properties[a]				
Specified Test	**Specified Method**	**Minimum Value Allowed**	**Maximum Value Allowed**	**Typical Values**
Kinematic Viscosity at 100 ^{o}C, cSt	ASTM D445	17	18.5	17.65
Kinematic Viscosity at 40 ^{o}C, cSt	ASTM D445	--	--	108.7
Viscosity Index	ASTM D2270	172	--	179.5
Pour Point, ^{o}C	ASTM D97	--	-42	-48
Sulfur, %	ASTM D1552	1.23	2.21	1.8
Phosphorus, %	ASTM D4951	0.07	0.123	0.09
Nitrogen, %	ASTM D4629	0.083	0.263	0.14
Boron, %	ASTM D4951	0.006	0.19	0.012
Moisture, %	Karl Fischer Titration, ASTM D6304	--	0.10	0.04
Flash Point, ^{o}C	ASTM D92	150	--	193
Density @ 60 ^{o}F, Kg/L	ASTM D4052	--	--	0.866
Copper corrosion	ASTM D130	--	2b	1b

[a]*Provided by ConocoPhillips. Not verified by the GHG Center.*

VERIFICATION DESCRIPTION

The goal of the performance verification testing for the ConocoPhillips FEHP rear axle gear lubricant was the determination of a potential small change in fuel economy resulting from the use of the FEHP lubricant when compared to a standard or reference lubricant. The test program was completed in accordance with the requirements of the Test and Quality Assurance Plan for ConocoPhillips Fuel-Efficient High-Performance SAE 75W90 Rear Axle Gear Lubricant (SRI/USEPA-GHG-QAP-28), March, 2003. The sole verification parameter for testing of the ConocoPhillips FEHP rear axle gear lubricant is the change in fuel economy (mpg). Emissions of greenhouse gases and other pollutants were also determined.

Fuel economy testing was completed at Southwest Research Institute's (SwRI) Department of Emissions Research (DER). The test site for the FEHP fuel economy change determination was SwRI's light-duty vehicle Chassis Dynamometer #7. The dynamometer is equipped with a constant volume sampling system, an array of emissions analyzers, a fuel supply cart, and ambient monitoring and control equipment. Testing conditions (ambient conditions, test fuel, vehicle driver, etc.) were consistent throughout the test period.

Testing was completed on a 2003 Ford F-150 Supercrew V8 with a straight beam axle. This vehicle was determined to be representative of a large portion of straight beam axle vehicles in current production, although a portion of vehicles in the future are likely to make use of independent rear wheel suspensions. The vehicle was operated on the chassis dynamometer over two test cycles for each test run using the Federal Test Procedure (FTP) (40 CFR 86.115) and the Highway Fuel Economy Test (HFET) (40 CFR Part 600, Appendix I) to determine fuel

economy. Carbon monoxide (CO), carbon dioxide (CO_2), nitrogen oxides (NO_x), total hydrocarbons (THC), and methane (CH_4) emission rates for each test phase were determined through analysis of exhaust samples using the Horiba VETS-9200 control system, emission analyzers and a constant volume sampling system. Pollutant mass emission rates were calculated in accordance with 40 CFR 86.144. Non-methane hydrocarbon (NMHC) emission rates were calculated from THC and CH_4 emissions in accordance with the same standard. Vehicle fuel economy was calculated using the methods specified in 40 CFR 600.113. This method uses a carbon balance based on the carbon content of test fuel used and carbon exhaust emissions measured during each test phase to determine fuel economy.

The test period consisted of an initial set of five valid test runs using the reference lubricant (75W140, as recommended by the manufacturer). Six runs using the 75W90 FEHP lubricant were then completed. Six additional runs using fresh reference lubricant were completed after the FEHP runs to determine if a change in fuel economy occurred as a result of mileage accumulation effects and vehicle break-in. The mean fuel economies for each lubricant type were compared to determine the fuel economy change. A statistical analysis was applied to the data sets to determine the statistical significance of the measured fuel economy change. A confidence interval was calculated for the observed fuel economy change.

The test vehicle was acquired on March 26, 2003, with vehicle setup, axle lubricant change, and mileage accumulation occurring between March 26 and April 1, 2003. The fuel economy testing verification period started on April 2, 2003. Testing was completed on May 31, 2003.

Quality assurance audits of the test facility laboratory were completed by the GHG Center field team leader during testing. The GHG Center completed: (1) a technical systems audit to assure the testing was in compliance with the test plan; (2) a performance evaluation audit to ensure that measurement systems employed were adequate to produce reliable data; and (3) a data quality audit of at least 10 percent of the test data to assure that the reported data and data reduction procedures accurately represented the data generated during the test. In addition to the quality assurance audits performed by the GHG Center, EPA QA personnel conducted a quality assurance review of the Verification Report and a quality systems audit of the GHG Center's Quality Management Program.

The GHG Center has made every attempt to obtain a reasonable and representative set of data to examine fuel economy changes resulting from the use of the FEHP lubricant in light-duty trucks. However, these results may not represent performance at significantly different operating conditions or for different vehicle and axle types.

VERIFICATION OF PERFORMANCE

A total of seventeen valid fuel economy tests were completed on the test vehicle during the test period. Fuel economy data was normalized to account for a slight upward drift in fuel economy between the initial and final reference lubricant runs. Table 2 presents a summary of the normalized mean fuel economy results and the standard deviation for each set of lubricant tests.

Table 2: Normalized Fuel Economy Test Results	
Test Run ID	**Normalized Fuel Economy (mpg)**
Reference Lubricant- Initial	
Mean	**17.396**
Standard Deviation	**0.0414**
FEHP Lubricant	
Mean	**17.566**
Standard Deviation	**0.0307**
Reference Lubricant- Final	
Mean	**17.398**
Standard Deviation	**0.0447**

Analysts completed a statistical analysis of the fuel economy data to determine whether a statistically significant change in fuel economy had occurred. A confidence interval was also calculated for the fuel economy change. The following summarizes the verification results:

- The GHG Center's evaluation of the verification test results shows a statistically significant improvement in overall fuel economy resulting from the use of the FEHP rear axle lubricant on a 2003 Ford F-150 with beam axle.
- The mean measured fuel economy improvement resulting from the use of the ConocoPhillips FEHP 75W90 rear-axle lubricant is **0.169 mpg ± 0.0410 mpg**. The error specified represents the 95-percent confidence interval of the measured fuel economy change data.
- A **0.97 percent** improvement in overall vehicle fuel economy occurred with the use of the FEHP lubricant when compared to the mean vehicle fuel economy with the reference lubricant.

Greenhouse gas and other pollutant emissions from the test vehicle were measured during use of the reference lubricant and FEHP lubricant as part of the fuel economy test procedure. The following tables present a summary of the mean pollutant emission rates observed for both the FTP and HFET test cycles.

Table 3a: Greenhouse Gas and Other Pollutant Emissions – FTP						
	THC	**CO**	**NO_x**	**CO_2**	**NMHC**	**CH_4**
Test Run ID	g/mi	g/mi	g/mi	g/mi	g/mi	g/mi
Reference Lubricant-Initial						
Mean	*0.105*	*0.952*	*0.035*	*584.192*	*0.091*	*0.014*
Standard Deviation	*0.005*	*0.028*	*0.002*	*1.746*	*0.005*	*0.001*
FEHP						
Mean	*0.106*	*0.964*	*0.035*	*575.927*	*0.092*	*0.014*
Standard Deviation	*0.005*	*0.071*	*0.003*	*1.199*	*0.004*	*0.000*
Reference Lubricant-Final						
Mean	*0.111*	*0.990*	*0.036*	*580.072*	*0.095*	*0.015*
SD	*0.004*	*0.070*	*0.002*	*1.398*	*0.005*	*0.001*

Table 3b: Greenhouse Gas and Other Pollutant Emissions – HFET						
	THC	**CO**	**NO_x**	**CO_2**	**NMHC**	**CH_4**
Test Run ID	g/mi	g/mi	g/mi	g/mi	g/mi	g/mi
Reference Lubricant-Initial						
Mean	*0.023*	*0.145*	*0.007*	*380.334*	*0.015*	*0.007*
Standard Deviation	*0.004*	*0.039*	*0.000*	*1.461*	*0.004*	*0.001*
FEHP						
Mean	*0.025*	*0.164*	*0.008*	*376.320*	*0.017*	*0.008*
Standard Deviation	*0.003*	*0.018*	*0.001*	*0.880*	*0.002*	*0.001*
Reference Lubricant-Final						
Mean	*0.025*	*0.168*	*0.008*	*378.109*	*0.017*	*0.008*
Standard Deviation	*0.003*	*0.030*	*0.001*	*2.469*	*0.002*	*0.001*

Emissions are consistent throughout each group of test runs, with coefficients of variation below 0.3. A comparison of mean gram per mile emission rates for the FEHP and reference lubricants indicates a reduction in CO_2 emissions during the FEHP runs when compared to the reference lubricant runs for both the FTP and HFET cycles. Carbon dioxide constitutes the majority of vehicle exhaust. Therefore, a reduction in CO_2 emissions is expected as a result of the improvement in fuel economy attributed to the use of the FEHP lubricant.

Signed by Hugh W. McKinnon, 9/2003

Hugh W. McKinnon, M.D., M.P.H.
Director
National Risk Management Research Laboratory
Office of Research and Development

Signed by Stephen D. Piccot, 9/2003

Stephen D. Piccot
Director
Greenhouse Gas Technology Center
Southern Research Institute

Notice: GHG Center verifications are based on an evaluation of technology performance under specific, predetermined criteria and the appropriate quality assurance procedures. The EPA and Southern Research Institute make no expressed or implied warranties as to the performance of the technology and do not certify that a technology will always operate at the levels verified. The end user is solely responsible for complying with any and all applicable Federal, State, and Local requirements. Mention of commercial product names does not imply endorsement or recommendation.

EPA REVIEW NOTICE

This report has been peer and administratively reviewed by the U.S. Environmental Protection Agency, and approved for publication. Mention of trade names or commercial products does not constitute endorsement or recommendation for use.

This page has been left intentionally blank

SRI/USEPA-GHG-VR-29
August 2003

Greenhouse Gas Technology Center

A U.S. EPA Sponsored Environmental Technology Verification (ETV) Organization

Environmental Technology Verification Report

ConocoPhillips
Fuel-Efficient High-Performance (FEHP) SAE 75W90
Rear Axle Gear Lubricant

Prepared By:
Greenhouse Gas Technology Center
Southern Research Institute
PO Box 13825
Research Triangle Park, NC 27709 USA
Telephone: 919/806-3456

Under EPA Cooperative Agreement CR 826311-01-0

U.S. Environmental Protection Agency
Office of Research and Development
National Risk Management Research Laboratory
Air Pollution Prevention and Control Division
Research Triangle Park, NC 27711 USA

EPA Project Officer: David A. Kirchgessner

TABLE OF CONTENTS

Page

APPENDICES ..... **iii**
LIST OF FIGURES ..... **iii**
LIST OF TABLES ..... **iii**
ACKNOWLEDGMENTS ..... **v**
ACRONYMS/ABBREVIATIONS ..... **vi**

1.0 INTRODUCTION **1-1**
1.1. BACKGROUND 1-1
1.2. CONOCOPHILLIPS FEHP TECHNOLOGY DESCRIPTION 1-2
1.3. DESCRIPTION OF TEST FACILITY AND PROCEDURES 1-3
1.3.1. Test Facility 1-3
1.3.2. Test Vehicle 1-4
1.4. PERFORMANCE VERIFICATION OVERVIEW 1-5
1.4.1. Introduction and Verification Parameters 1-5
1.4.2 Fuel Economy Change Statistical Significance 1-6
1.4.3 Fuel Economy Change Confidence Interval 1-9
1.4.4 Calculation of Fuel Economy Improvement 1-10
1.4.5 Testing and Measurement Equipment 1-11
1.4.5.1 Chassis Dynamometer 1-11
1.4.5.2 Constant Volume Sampling System 1-11
1.4.5.3 Emission Analyzers 1-12
1.4.5.4 Ambient Monitoring Equipment 1-13
1.4.5.5 Fuel Cart 1-13
1.4.6 Testing Procedure and Sequence 1-14
1.4.6.1 Vehicle Receipt and Initial Preparation 1-14
1.4.6.2 Engine Oil Change and Driver Familiarity Runs 1-15
1.4.6.3 Rear Axle Lubricant Changes 1-15
1.4.6.4 Vehicle and Axle Inspection and Gear Rating 1-16
1.4.6.5 Mileage Accumulation 1-16
1.4.6.6 Test Fuel and Fuel System Preparation 1-16
1.4.6.7 Dynamometer Setup 1-17
1.4.6.8 Bag Cart and Emission Analyzer Setup 1-18
1.4.6.9 Vehicle Preconditioning 1-18
1.4.7 Reference Lubricant and FEHP Fuel Economy Test Procedure 1-19
1.4.8 Reference Lubricant and FEHP Fuel Economy Determination 1-20
1.4.9 Pollutant and GHG Emissions 1-22

2.0 VERIFICATION RESULTS **2-1**
2.1. FUEL ECONOMY IMPROVEMENT 2-2
2.1.1. Fuel Economy Test Results 2-2
2.1.2. Fuel Economy Change 2-3
2.1.3. Reference Lubricant Fuel Economy 2-4
2.1.4. Fuel Economy Change 2-5
2.2. FUEL ECONOMY CHANGE STATISTICAL SIGNIFICANCE 2-10
2.3. FUEL ECONOMY SAVINGS CONFIDENCE INTERVAL 2-10
2.4. FUEL ECONOMY CHANGE CALCULATION CROSS-CHECKS 2-11
2.5. GREENHOUSE GAS AND OTHER POLLUTANT EMISSIONS 2-14

3.0 DATA QUALITY ASSESSMENT 3-1
3.1. DATA QUALITY OBJECTIVES 3-1
3.2. RECONCILIATION OF DQOs AND DQIs 3-2
3.2.1. Dynamometer Specifications, Calibrations, and QA/QC Checks 3-2
3.2.2. CVS Sampling System Specifications, Calibrations, and QA/QC Checks 3-4
3.2.3. Emission Analyzer Specifications, Calibrations, and QA/QC Checks 3-5
3.2.4. Ambient Instrument Specifications, Calibrations, and QA/QC Checks 3-10
3.2.5. Test Fuel Specifications 3-11
3.2.6. Fuel Economy Volumetric and Gravimetric Cross-Checks 3-12

4.0 TECHNICAL AND PERFORMANCE DATA SUPPLIED BY CONOCOPHILLIPS 4-1

5.0 REFERENCES 5-1

APPENDICES

		Page
APPENDIX A	Engine Oil and Axle Lubricant Change Procedures and Records	A-1
APPENDIX B	Test Fuel Analysis	B-1
APPENDIX C	Daily Test Protocol and Checklist	C-1
APPENDIX D	Dynanometer Setup Data	D-1
APPENDIX E	Outlying Data Review and Analysis	E-1

LIST OF FIGURES

		Page
Figure 1-1	CVS System Schematic	1-12
Figure 1-2	Instrumental Analyzer System	1-13
Figure 1-3	Fuel Cart Schematic	1-14
Figure 2-1	Reference Lubricant Fuel Economy Results vs. Mileage	2-6
Figure 2-2	Normalized Reference Lubricant and FEHP Fuel Economy Results vs. Mileage	2-8

LIST OF TABLES

		Page
Table 1-1	FEHP Fluid Properties	1-3
Table 1-2	Estimated Vehicle Axle Production Quantities (2003)	1-4
Table 1-3	Test Vehicle Specifications	1-5
Table 1-4	Test Fuel Specifications	1-17
Table 1-5	Dynamometer Setup Coefficients	1-17
Table 1-6	Emission Analyzer Ranges	1-18
Table 1-7	Daily Test Procedure	1-20
Table 2-1	Fuel Economy Test Results	2-2
Table 2-2	F-test Evaluation of Reference Lubricant Fuel Economy Data Set Variances	2-4
Table 2-3	Statistical Analysis of Reference Lubricant Tests Fuel Economy Differences	2-4
Table 2-4	Reference Lubricant Data Regression Statistics	2-5
Table 2-5	Normalized Fuel Economy Test Results	2-7
Table 2-6	F-test Evaluation of Reference Lubricant Fuel Economy Data Set Variances	2-8
Table 2-7	Statistical Analysis of Reference Lubricant Fuel Economy Difference	2-9

LIST OF TABLES

		Page
Table 2-8	Summary of Pooled Normalized Reference Lubricant Data	2-9
Table 2-9	Statistical Analysis of Fuel Economy Change	2-10
Table 2-10	F-test Evaluation of Fuel Economy Data Set Variances	2-11
Table 2-11a	Fuel Economy Change Cross-Check Calculations	2-12
Table 2-11b	Fuel Economy Change Cross-Check Calculations	2-13
Table 2-12	Summary of Greenhouse Gas Emissions	2-15
Table 2-13	Greenhouse Gas and Other Pollutant Emissions – HFET	2-16
Table 3-1	Fuel Economy Change and Data Quality Objective	3-1
Table 3-2	Chassis Dynamometer Specifications and DQI Goals	3-3
Table 3-3	Chassis Dynamometer QA/QC Checks	3-3
Table 3-4	CVS Specifications and DQI Goals	3-4
Table 3-5	CVS System QA/QC Checks	3-5
Table 3-6	Emissions Analyzer Specifications and DQI Goals	3-6
Table 3-7	Emissions Analyzer QA/QC Checks	3-7
Table 3-8	Ambient Instrument Specifications and DQI Goals	3-10
Table 3-9	Ambient Instrument QA/QC Checks	3-10
Table 3-10	Test Fuel American Society for Testing and Materials Measurement Methods and DQI Goals	3-11
Table 3-11	Volumetric and Gravimetric Cross-Checks – FEHP Lubricant Test Runs	3-12
Table 3-12	Volumetric and Gravimetric Cross-Checks – Reference Lubricant Test Runs	3-13
Table 3-13	Volumetric and Gravimetric Cross-Checks – Post FEHP	3-13

ACKNOWLEDGMENTS

The Greenhouse Gas Technology Center wishes to thank Kay Bjornen of ConocoPhillips, Paul Schwarz of Visteon, Arup Gangopadhyay of the Ford Research Laboratory, and Kevin Whitney of SwRI for reviewing and providing input on the testing strategy and this Verification Report. Thanks are also extended to Bill Olson of SwRI for his assistance in executing the verification testing.

ACRONYMS/ABBREVIATIONS

List of Acronyms and Abbreviations

ADQ	Audit of Data Quality
ANSI	American National Standards Institute
APPCD	Air Pollution Prevention and Control Division
ASME	American Society of Mechanical Engineers
ASTM	American Society for Testing and Materials
^{o}C	degrees Centigrade
CFR	Code of Federal Regulations
CFO	critical flow orifice
CFV	critical flow venturi
CH_4	methane
CO	carbon monoxide
CO_2	carbon dioxide
COV	coefficient of variation
cP	Centipoise
cSt	Centistoke
CVS	constant volume sampler
CWF	carbon weight fraction
DAS	data acquisition system
DDS	Durability Driving Schedule
DF	degrees of freedom
DOE	U.S. Department of Energy
DQI	data quality indicator
DQO	data quality objective
EPA-ORD	Environmental Protection Agency Office of Research and Development
EPA	Environmental Protection Agency
ETV	Environmental Technology Verification
^{o}F	degrees Fahrenheit
FEHP	ConocoPhillips Fuel-Efficient High-Performance SAE 75W90 rear-axle gear lubricant
FID	flame ionization detector
FRL	Ford Research Laboratory
FTP	Federal Test Procedure
ft^3	cubic feet
gal	U.S. Imperial gallons
GC	gas chromatograph
GHG	greenhouse gas
GHG Center	Greenhouse Gas Technology Center
g/mi	grams per mile
HFET	Highway Fuel Economy Test
Hz	Herz
ISO	International Organization for Standardization
Kg/L	kilograms per liter
lb	pounds
lbf	pounds force
LHV	lower (or net) heating value
MAD	mileage accumulation dynamometer

mpg	miles per gallon
N_2	Nitrogen
NIST	National Institute of Standards and Technology
NMHC	non-methane hydrocarbons
NO	nitric oxide
NO_2	nitrogen dioxide
NO_X	blend of NO, NO_2, and other oxides of nitrogen
O_2	oxygen
O_3	ozone
ORD	Office of Research and Development
PEA	performance evaluation audit
ppmv	parts per million volume
psia	pounds per square inch absolute
psig	pounds per square inch gauge
QA	quality assurance
QA/QC	quality assurance / quality control
QMP	Quality Management Plan
Report	Environmental Technology Verification Report
RH	relative humidity
SAE	Society of Automotive Engineers
SAO	smooth approach orifice
SG	specific gravity
SOP	standard operating procedure
SRI	Southern Research Institute
SRM	standard reference material
SUV	sport utility vehicle
SwRI	Southwest Research Institute
SwRI DER	Southwest Research Institute Department of Emissions Research
Test Plan	Test and Quality Assurance Plan
THC	total hydrocarbons (as carbon)
TSA	technical systems audit
VETS	Vehicle Emissions Testing System
VEZ	vehicle emission zero (gas)
U.S.	United States
U.S. EPA	United States Environmental Protection Agency

This page left intentionally blank

1.0 INTRODUCTION

1.1. BACKGROUND

The U.S. Environmental Protection Agency's Office of Research and Development (EPA-ORD) operates the Environmental Technology Verification (ETV) program to facilitate the deployment of innovative technologies through performance verification and information dissemination. The goal of ETV is to further environmental protection by accelerating the acceptance and use of improved and innovative environmental technologies. Congress funds ETV in response to the belief that there are many viable environmental technologies that are not being used for the lack of credible third-party performance data. With performance data developed under this program, technology buyers, financiers, and permitters in the United States and abroad will be better equipped to make informed decisions regarding environmental technology purchase and use.

The Greenhouse Gas Technology Center (GHG Center) is one of six verification organizations operating under the ETV program. The GHG Center is managed by EPA's partner verification organization, Southern Research Institute (SRI), which conducts verification testing of promising GHG mitigation and monitoring technologies. The GHG Center's verification process consists of developing verification protocols, conducting field tests, collecting and interpreting field and other data, obtaining independent peer-review input, and reporting findings. Performance evaluations are conducted according to externally reviewed verification Test and Quality Assurance Plans (Test Plans) and established protocols for quality assurance.

The GHG Center is guided by volunteer groups of stakeholders. These stakeholders guide the Center on which technologies are most appropriate for testing, help disseminate results, and review Test Plans and Technology Verification Reports (Reports). The GHG Center's Executive Stakeholder Group consists of national and international experts in the areas of climate science and environmental policy, technology, and regulation. It also includes industry trade organizations, environmental technology finance groups, governmental organizations, and other interested groups. The GHG Center's activities are also guided by industry specific stakeholders who provide guidance on the verification testing strategy related to their area of expertise and peer-review key documents prepared by the GHG Center.

One sector of significant interest to GHG Center stakeholders is transportation - particularly technologies that result in fuel economy improvements. The transportation sector accounted for approximately 32 percent of CO_2 emissions from fossil fuel combustion during 2001. The US EPA reports that in 2001, automobiles and light-duty trucks produced approximately 1.074×10^9 and 1.87×10^7 metric tons of carbon dioxide (CO_2) equivalent from the combustion of gasoline and diesel fuel, respectively. Combustion of gasoline and diesel fuel in automobiles and light-duty trucks was responsible for approximately 73 percent (57 percent from gasoline and 16 percent from diesel) of total transportation related CO_2 emissions in the U.S. during 2001[(1)]. Because of the large quantity of fuel consumed, small fuel efficiency or emission rate improvements are expected to have a significant beneficial impact on nationwide greenhouse gas emissions.

ConocoPhillips has developed the Fuel-Efficient High-Performance (FEHP) SAE 75W90 Rear-Axle Gear Lubricant and has requested that the GHG Center independently verify its performance. ConocoPhillips developed FEHP in partnership with an axle manufacturer (Visteon Corporation) and an additive supplier (Ethyl Petroleum Additives, Ltd.), and markets it as a fuel-efficient high-performance multi-grade gear lubricant for light-duty trucks, automobiles, and sport utility vehicles (SUVs). According to

ConocoPhillips, the development process included durability tests on 43 vehicles operating over a total of 2.8 million fleet miles. The developers report incremental (0.1 to 0.2 miles per gallon [mpg]) fuel economy improvements with FEHP as compared to standard lubricants. FEHP is a suitable verification candidate considering its potentially significant beneficial environmental quality impacts (emission reductions through reduced fuel consumption) and ETV stakeholder interest in verified transportation sector emission reduction technologies.

The GHG Center completed verification testing from March 27 – May 31, 2003 to evaluate the fuel economy performance attributable FEHP in a 2003 Ford Motor Company (Ford) F-150 light-duty truck. Verification tests were conducted at Southwest Research Institute's (SwRI) Department of Emissions Research (DER) in San Antonio, TX.

These tests were planned and executed by the GHG Center to independently verify the change in fuel economy resulting from the use of FEHP. This report presents the results of these verification tests. Exhaust emissions were also monitored during verification testing. Observed greenhouse gas emissions are provided in this report.

Details on the verification test design, measurement test procedures, and Quality Assurance/Quality Control (QA/QC) procedures can be found in the Test Plan titled *Test and Quality Assurance Plan for the ConocoPhillips Fuel-Efficient High-Performance SAE 75W90 Rear Axle Gear Lubricant* (SRI/USEPA-GHG) 2003, QAP-28). The Test Plan can be downloaded from the GHG Center's Web site (www.sri-rtp.com) or the ETV program web site (www.epa.gov/etv). The Test Plan describes the rationale for the experimental design, the testing and instrument calibration procedures planned for use, and specific QA/QC goals and procedures. The Test Plan was reviewed and revised based on comments received from ConocoPhillips, Visteon, Ford Motor Company, SwRI, and the EPA Quality Assurance Team. The Test Plan meets the requirements of the GHG Center's Quality Management Plan (QMP) and satisfies the ETV QMP requirements. Deviations from the Test Plan were sometimes required. The rationale for these deviations and their descriptions are discussed in this report.

The remainder of Section 1.0 describes the ConocoPhillips FEHP technology, the SwRI test facility, and the performance verification procedures that were followed. Section 2.0 presents test results and Section 3.0 assesses the quality of the data obtained. Section 4.0, submitted by ConocoPhillips, presents additional information regarding the FEHP lubricant. Information provided in Section 4.0 has not been independently verified by the GHG Center.

1.2. CONOCOPHILLIPS FEHP TECHNOLOGY DESCRIPTION

ConocoPhillips states that the FEHP rear axle lubricant consists of a low viscosity, synthetic base lubricant with proprietary optimized fluidity and friction modifiers when compared to standard axle lubricants. ConocoPhillips states that the FEHP offers the following benefits:

- **Improved axle efficiency,**
- **Reduced temperature under severe towing,**
- **Reduced spin losses, and**
- **Improved thermal and oxidative stability.**

ConocoPhillips also claims that the FEHP characteristics, including durability and protection, allow for the use of a SAE 75W90 FEHP product to replace standard SAE 75W140 lubricants typically specified in light-duty trucks and SUVs. The FEHP lubricant is currently in use in Visteon axles and some model

year 2003 production vehicles. Table 1-1, provided by ConocoPhillips, summarizes typical FEHP physical properties.

Table 1-1. FEHP Fluid Properties

Parameter	Test Method	Minimum Value Allowed	Maximum Value Allowed	Typical Values
Kinematic Viscosity at 100 ^{o}C, cSt	ASTM D445	17	18.5	17.65
Kinematic Viscosity at 40 ^{o}C, cSt	ASTM D445	--	--	108.7
Viscosity Index	ASTM D2270	172	--	179.5
Pour Point, ^{o}C	ASTM D97	--	-42	-48
Sulfur, %	ASTM D1552	1.23	2.21	1.8
Phosphorus, %	ASTM D4951	0.07	0.123	0.09
Nitrogen, %	ASTM D4629	0.083	0.263	0.14
Boron, %	ASTM D4951	0.006	0.19	0.012
Moisture, %	Karl Fischer Titration, ASTM D6304	--	0.10	0.04
Flash Point, ^{o}C	ASTM D92	150	--	193
Density @ 60 ^{o}F, kg/L	ASTM D4052	--	--	0.866
Copper corrosion	ASTM D130	--	2b	1b

1.3. DESCRIPTION OF TEST FACILITY AND PROCEDURES

1.3.1. Test Facility

Fuel economy testing was completed at Southwest Research Institute's (SwRI) Department of Emissions Research (DER). The SwRI DER maintains an International Organization for Standardization (ISO) 9002 "Model for Quality Assurance in Production and Installation" certification and ISO 17025 "General Requirements for the Competency of Calibration and Testing Laboratories" accreditations. The terms of these independently assessed quality systems allow SwRI to evaluate automotive fluids, fuels, emissions, automotive components, engine/power-train performance, and equipment durability for regulatory agencies, automobile manufacturers, and other clients. SwRI facilities include a wide variety of stationary engine dynamometer test stands (light-duty, non-road, and heavy-duty), vehicle dynamometer facilities, and associated state-of-the-art emissions test equipment. The GHG Center selected SwRI based on its experience and capability in conducting fuel economy tests in accordance with the requirements of the EPA city and highway driving cycles, 40 CFR Part 86 (Control of Emissions From New and In-Use Highway Vehicles and Engines), 40 CFR Part 600 (Fuel Economy of Motor Vehicles), experience in detecting small changes in fuel economy, and independence from the technology vendor and its competitors or end users.

The test site for the FEHP fuel economy change determination was SwRI's light-duty vehicle Chassis Dynamometer #7. The dynamometer is equipped with a constant volume sampling system, an array of emissions analyzers, a fuel supply cart, and ambient monitoring and control equipment. The testing and measurement equipment is described in detail in section 1.4.5.

1.3.2. Test Vehicle

ConocoPhillips developed the FEHP lubricant in conjunction with Visteon for use in Visteon axles. The only axles currently using FEHP lubricant are those produced by Visteon for Ford Motor Company for the current model year (2003) product line. The GHG Center selected the test vehicle to represent a significant population of vehicles in which the FEHP lubricant is currently used or will be used in the future. The GHG Center reviewed axle production numbers provided by Visteon for current model year vehicles and axles that currently use or could potentially use the FEHP lubricant (see Table 1-2). The GHG Center determined from this review that beam axles are dominant and the F-150 pickup truck was the leader in production quantity. The majority of FEHP lubricant development and testing had previously been completed for straight beam axles.

Table 1-2: Estimated Visteon Axle Production Quantities (2003)

Ford Vehicle Type	Estimated Visteon Axle Production (2003)
Beam Axle	
F-150	750,000/yr
F-250/F-350	300,000/yr
Econoline	80,000/yr
Ranger	300,000/yr
Crown Vic/Grand Marquis	200,000/yr
Mustang	100,000/yr
TOTAL	1.7 million/yr
Independent Rear Suspension (IRS)	
Explorer	350,000/yr
Expedition/Navigator	270,000/yr
TOTAL	620,000/yr

The Test Plan specified a current model year (2003) Lincoln Navigator SUV as the test vehicle. However, the Navigator in current production did not have a rear beam axle. The Navigator and its independent rear suspension represent a significantly smaller segment of the vehicle population than the Ford F-150 with the beam axle. Independent rear suspensions will be used more in the future, specifically in luxury sport utility vehicles. However, it is estimated that the light-duty truck market, as well as lower-end vehicles, will continue to use straight beam axles.

The Ford F-150 was selected as the vehicle that is most representative of a significant population of vehicles currently in production with axles that use the FEHP lubricant. The test vehicle selected for evaluation of the ConocoPhillips FEHP rear axle lubricant was a 2003 Ford F-150 Supercrew with a 5.4L V8 gasoline engine and a beam axle. A corrective action report (CAR #4) was completed for the change in test vehicle from the Lincoln Navigator to the Ford F-150 and is on file at the GHG Center.

The test vehicle was selected in accordance with the requirements of the test plan. The test vehicle had between 10,000 and 25,000 miles on the odometer and a beam axle with open differential. A vehicle is expected to operate normally at this mileage with minimal aging effects resulting from mileage accumulation during testing.

The test vehicle was equipped with a 5.4L V8 multiport fuel-injected gasoline engine and an open, non-limited slip gear differential on a straight beam axle. The initial mileage at vehicle receipt was 14,895. A vehicle receipt form, documenting the vehicle condition and specifications at receipt is on file at the GHG Center. The test vehicle specifications are summarized in Table 1-3.

Table 1-3: Test Vehicle Specifications

Model Year	2003
Model	Ford F-150 Supercrew
Engine	5.4L V8
Fuel	gasoline
VIN	1FTRW07L23KA13881
Engine Family ID	3FMXT05.4PFB
Transmission	4-speed automatic
Tire Size	P255/70R16
Air Conditioning	yes
Rear Axle Type	Straight beam axle w/ open non-limited slip differential
Rear Axle Gear Ratio	3.55:1
Rear Axle Diameter	9.75 inches
Rear Axle ID Tag No.	V942B 55 9 75 2H06
Initial Odometer Reading	14,895 mi

1.4. PERFORMANCE VERIFICATION OVERVIEW

1.4.1. Introduction and Verification Parameters

The goal of the ConocoPhillips FEHP rear axle lubricant performance verification testing is the determination of a potential small change in fuel economy resulting from the use of the FEHP lubricant when compared to a comparable standard replacement lubricant. The sole verification parameter for testing of the ConocoPhillips FEHP rear axle lubricant is the change in fuel economy (mpg). Emissions of greenhouse gases and other pollutants were also determined and reviewed for each axle lubricant as part of the fuel economy test procedure.

Each fuel economy test run conformed to the widely accepted Federal Test Procedure (FTP) and Highway Fuel Economy Test (HFET) for highway vehicles. Code of Federal Regulations (CFR) Title 40 Part 86, "Control of Emissions from New and In-Use Highway Vehicles and Engines" 86.115[(3)], and Part 600, "Fuel Economy of Motor Vehicles" 600.109[(4)], are the FTP and HFET source documents.

Verification of such small fuel economy changes is a multi-step process. First, appropriate test methods must be selected and used to allow for repeatable tests of fuel economy, while minimizing variability in testing conditions such that fuel economy changes can be attributed to the axle lubricant. Second, assuming that appropriate test methods have been conducted, the difference between the reference lubricant and FEHP mpg data must be statistically significant. Third, a confidence interval must be determined for the fuel economy difference and must be refined as much as possible to ensure data quality.

The following summarizes the basic steps of the testing procedure:

- Obtain and inspect representative vehicle and axle
- Change vehicle engine oil in accordance with manufacturer specifications
- Change vehicle axle lubricant to reference lubricant
- Accumulate 1000 miles on mileage accumulation dynamometer
- Precondition vehicle to test cycles
- Perform fuel economy testing using FTP and HFET driving cycles
- Evaluate results to determine required number of runs and minimize statistical error
- Change vehicle engine oil in accordance with manufacturer specifications
- Change vehicle axle lubricant to FEHP
- Accumulate 1000 miles on mileage accumulation dynamometer
- Precondition vehicle test cycles
- Perform fuel economy testing using FTP and HFET driving cycles
- Change vehicle engine oil in accordance with manufacturer specifications
- Change vehicle axle lubricant back to reference lubricant
- Accumulate 1000 miles on mileage accumulation dynamometer
- Precondition vehicle test cycles
- Perform fuel economy testing using FTP and HFET driving cycles
- Determine fuel economy change, statistical significance, and confidence interval

The procedure specified in the Test Plan required the completion of the initial reference lubricant testing and the FEHP testing. During testing, and after observation of a notable change in fuel economy using the FEHP, the GHG Center decided that completion of a second round of reference lubricant tests was necessary. This ensured that the observed fuel economy increase was attributable to the use of FEHP lubricant and not the effects of mileage accumulation or additional vehicle and axle break-in during the test period. Additional information regarding changes in calculation methods and tests runs as a result in the addition of the post-FEHP reference lubricant runs is provided in Sections 1.4.2 through 1.4.4. Section 1.4.6 provides details regarding the actual test procedures. The following sections discuss the data analysis, statistical review, and testing equipment in detail.

1.4.2 Fuel Economy Change Statistical Significance

Fuel economy change is the difference between the reference lubricant and FEHP mean mpg results. Each mean value is the result of a limited number of test runs. Statistical theory shows that the variability between test runs determines how accurately the mean characterizes all possible fuel economy values within a lubricant type (i.e. reference lubricant or FEHP). The mean can be sharply characterized if each individual test run result is very close to the mean value, or if variability is small. The difference between two such means would also be sharply characterized and the observed differences would be statistically significant. Large run-to-run variabilities can, however, exist. This causes the mean to “spread out” over a larger range of possible values. The difference between two such means may not be “statistically significant”, for example, if the reference lubricant mean fuel economy falls within the confidence interval of the FEHP fuel economy. The statistical significance of the difference in mean fuel economics is a measure of the probability or likelihood that the observed difference occurred by chance or is representative of the sample population (for example, a series of test results).

The GHG Center evaluated the statistical significance of the difference between the reference lubricant and FEHP fuel economies by the following hypothesis:

$$H_o: \quad |\mu_1 - \mu_2| = 0 \qquad \text{(Eqn. 1)}$$
$$H_1: \quad |\mu_1 - \mu_2| > 0$$

where:

H_o = Hypothesis that there is no statistically significant difference in fuel economy
H_1 = Hypothesis that there is a statistically significant difference in fuel economy
μ_1 = Mean fuel economy for the population of vehicles treated with FEHP lubricant
μ_2 = Mean fuel economy for the population of vehicles treated with reference lubricant

Essentially, the hypothesis is a comparison of the mean of the reference lubricant tests with the mean of the FEHP tests. A statistical test is applied to the lubricant test data to evaluate whether there is a statistically significant difference between the reference lubricant and FEHP lubricant means. If so, the hypothesis, H_o, is rejected, indicating that the fuel economy difference is significant. To evaluate the statistical significance of the difference between the two lubricant fuel economy means, a test statistic, t_{test}, is calculated for the fuel economy change test data. The t-statistic for the test data is:[5]

$$t_{test} = \frac{(\overline{X}_1 - \overline{X}_2) - (\mu_1 - \mu_2)}{\sqrt{s_p^2\left(\frac{1}{n_1} + \frac{1}{n_2}\right)}} \qquad \text{(Eqn. 2)}$$

$$s_p^2 = \frac{(n_1 - 1)s_1^2 + (n_2 - 1)s_2^2}{n_1 + n_2 - 2} \qquad \text{(Eqn. 3)}$$

where:

$\overline{X}_1$ = Mean fuel economy with FEHP lubricant
$\overline{X}_2$ = Mean fuel economy with reference lubricant
$\mu_1 - \mu_2$ = Zero (H_o hypothesizes that there is no difference between the population means)
n_1 = Number of repeated test runs with FEHP lubricant
n_2 = Number of repeated test runs with reference lubricant
s_1^2 = Sample standard deviation with FEHP lubricant, squared
s_2^2 = Sample standard deviation with reference lubricant, squared
s_p^2 = Pooled standard deviation, squared

To determine whether a statistically significant change is observed, this calculated t_{test} statistic is compared to a critical Student's t-distribution value, $t_{\alpha/2,\ DF}$, for the same number of degrees of freedom (DF) as the test runs with an acceptable uncertainty, α, of 0.05[5]. This comparison evaluates whether the fuel economy difference will be observed in similar tests at least 95 percent of the time, based on the test data and the observed variance of the test data.

The decision rule for the hypothesis test is:

Do not reject H_o if $t_{test} \leq t_{0.025,DF}$. Conclude that the data cannot show a statistically significant fuel economy difference between FEHP lubricant versus the reference lubricant.

Otherwise,

Reject H_o if $t_{test} > t_{0.025,DF}$. Conclude that a significant fuel economy difference exists between the FEHP lubricant versus reference lubricant.

Therefore, if the test data t_{test} value is greater than the critical t-distribution value, the observed fuel economy change is statistically significant.

Sample variability for each lubricant provides an indication of the repeatability of the testing process. The F-test statistic is a calculation that compares the variances of two data sets. An F_{test} statistic is calculated to determine the degree of similarity between the reference lubricant and FEHP sample variances.

$$F_{test} = \frac{s^2_{\max}}{s^2_{\min}} \qquad \text{(Eqn. 4)}$$

where:

F_{test} = F-test statistic
s^2_{max} = Larger of the reference lubricant or FEHP sample standard deviations, squared
s^2_{min} = Smaller of the reference lubricant or FEHP sample standard deviations, squared

The calculated F-test statistic is compared to an F-statistic distribution value for the specified number of test runs with an acceptable uncertainty (α; 0.05 for this verification).[5]

Analysts will conclude that the sample variances are substantially the same and the hypothesis test for statistical significance and confidence interval calculations are valid approaches if the F-test statistic is less than the corresponding distribution value. Analysts conclude that the sample variances are not the same and will consequently modify the confidence interval calculation according to Satterthwaite's approximation if the F-test statistic is equal to or greater than the specified distribution value. Satterthwaite's approximation describes how to estimate the appropriate degrees of freedom for use in calculating a modified critical t-distribution value and confidence interval.[6]

Satterthwaite's approximation is used to calculate the degrees of freedom for the critical t-distribution value for data sets having unequal variances. Satterthwaite's approximation for degrees of freedom is: [6]

$$df = \frac{s_d^4}{\frac{(s_1^2/n_1)^2}{n_1 - 1} + \frac{(s_2^2/n_2)^2}{n_2 - 1}} \qquad \text{(Eqn. 5)}$$

$$\text{where } s_d = \sqrt{\frac{s_1^2}{n_1} + \frac{s_2^2}{n_2}} \qquad \text{(Eqn. 5a)}$$

where:

s_1 = standard deviation of data set 1
s_2 = standard deviation of data set 2
n_1 = number of tests in data set 1
n_2 = number of tests in data set 2
s_d = pooled standard deviation

The calculated degrees of freedom value is used in estimating the critical t-distribution value at the 95-percent confidence level. The critical t distribution value is used in calculating the 95 percent confidence interval as described in Section 1.4.3.

The approximate t-statistic specified in Equation 6, when compared to the critical t-distribution value, is used to evaluate the statistical significance of the fuel economy change for data sets with unequal variances. [6]

$$t' = \frac{\left(\overline{X}_1 - \overline{X}_2\right)}{s_d} \qquad \text{(Eqn. 6)}$$

where:

t' = approximate t-statistic for test runs with unequal variances
$\overline{X}_1$ = mean fuel economy with FEHP lubricant
$\overline{X}_2$ = mean fuel economy with reference lubricant
s_d = pooled standard deviation (Eqn. 5a)

1.4.3 Fuel Economy Change Confidence Interval

It becomes meaningful to calculate the confidence interval of the fuel economy change if a statistically significant change in fuel economy is determined as described in Section 1.4.2. The confidence interval of the mean fuel economy change provides a range of values around the mean that indicate where the true population of sample means can be expected to be located with a given level of certainty (95 percent for this test). A narrow confidence interval implies that the fuel economy change is sharply characterized. Conversely, a large confidence interval implies that the data was spread across a wide range and the resulting mean fuel economy change could have limited utility.

The half-width (e) of the 95-percent confidence interval is:[5]

$$e = t_{.025,DF}\sqrt{s_p^{\,2}\left(\frac{1}{n_1} + \frac{1}{n_2}\right)} \qquad \text{(Eqn. 7)}$$

where:

$t_{0.025,\,DF}$ = the critical t-distribution value
s_p^2 = the pooled standard deviation squared
n_1 = the number of FEHP lubricant test runs
n_2 = the number of reference lubricant test runs

If the variances of the two data sets are unequal, as determined by the F-test, and Satterthwaite's approximation is used, the confidence interval is calculated as follows:

$$e = t_{.025,DF}\sqrt{\left(\frac{s_1^2}{n_1}+\frac{s_2^2}{n_2}\right)} \qquad \text{(Eqn. 8)}$$

The mean fuel economy change is stated as $\Delta \pm e$, where Δ is the change in fuel economy and e is the 95-percent confidence interval.

1.4.4 Calculation of Fuel Economy Improvement

The statistical analysis of the fuel economy change, as described in sections 1.4.2 and 1.4.3, is based on a comparison of the mean reference lubricant fuel economy to the mean FEHP fuel economy. The fuel economy change would typically be the difference between the means of the reference lubricant and FEHP tests, as described in the Test Plan. However, because a second set of reference lubricant test data was collected after the FEHP test runs, analysts must determine how to evaluate the two sets of reference lubricant data such that it can be compared to the FEHP fuel economy.

The first step is to determine whether the two sets of reference lubricant data are from the same population and can therefore be pooled together as a single data set. It is possible that test and vehicle conditions or vehicle break-in or wear could result in a drift in fuel economy vs. mileage, such that significantly different means are observed between the two reference lubricant test data sets. A procedure similar to the statistical significance test described in Section 1.4.2 is applied to evaluate the reference lubricant data sets and determine if they are from the same population.

The mean and standard deviation are initially calculated for each set of data (initial reference lubricant, FEHP lubricant, and final reference lubricant). The variances of the two reference lubricant data sets are compared using the F-test described in Section 1.4.2 (Equation 4). If the two data sets have similar variances, and the F-test is passed, then a t-test is performed on the data sets as discussed in Section 1.4.2 (equation 2) to determine whether the data sets are statistically from the same or different populations. If the data sets have differing variances, the reference lubricant data should not be combined and should be reviewed independently.

There are several methods of evaluating the fuel economy improvement from the reference lubricant to the FEHP lubricant based on the results of the analysis of the reference lubricant. The final fuel economy improvement value will be evaluated by each method for statistical significance and confidence interval using the statistical methods described in Sections 1.4.2 and 1.4.3.

The fuel economy improvement can initially be determined based on each separate group of reference lubricant data. Analysts will compare the initial reference lubricant mean fuel economy with the FEHP lubricant mean fuel economy, as well as the final reference lubricant fuel economy with the FEHP lubricant fuel economy. A maximum and minimum fuel economy improvement will then be reported, each with a specified confidence interval.

The second method, which is valid if it is shown that the reference lubricant data is all from the same population, is to pool all of the reference lubricant fuel economy data, determine a mean reference lubricant fuel economy and evaluate the fuel economy improvement, statistical significance, and confidence interval based on this pooled data set. This method can also be used if the two reference

lubricant mean fuel economies differ, assuming that the change in mean reference lubricant fuel economy is the result of test variability.

The third method, which would be applicable if it is demonstrated that the two reference lubricant data sets are from distinct populations, is to determine a mean reference lubricant fuel economy based on the means of each reference lubricant data group. If analysts observe a statistically significant change in reference lubricant fuel economy, with each data set having a low variance, it can be assumed that the change in reference lubricant fuel economy is the result of vehicle fuel economy drift due to break-in, mileage effects, or various other vehicle dynamics that cannot be controlled during the test procedure. All test data is normalized to account for the observed vehicle drift under this assumption. The normalization parameter is based on the rate of vehicle drift. Assuming similar variance, the normalized reference lubricant data should then be pooled together and the mean compared to the mean normalized reference lubricant fuel economy.

Sections 2.1 through 2.4 discuss the details and results of the data analysis and the calculation of the fuel economy improvement.

1.4.5 Testing and Measurement Equipment

The equipment used in determining the fuel economy of the test vehicle was specified in the test plan. The following subsections provide details regarding specific equipment used during testing.

1.4.5.1 Chassis Dynamometer

This verification used SwRI's Chassis Dynamometer #7 and its associated sampling and analysis system for light-duty gasoline vehicles. The chassis dynamometer is a Power Converter 48-inch single-roll electric dynamometer manufactured by Horiba Instruments. The chassis dynamometer consists of the 48" single roll, power converter, power-exchange unit motor, bearing-drive motors, CDC-900 computerized dynamometer controller, and a RTM 200 real-time dynamometer monitor. This chassis dynamometer uses a feed-forward control system for inertia-and road-load simulation. The dynamometer electrically simulates vehicle tire/road interface forces, including parasitic and aerodynamic drag. The vehicle experiences the same speed, acceleration/deceleration, and distance traveled as it would on the road. A preprogrammed road-load curve is the basis for the required force during each second of the driving schedule. Observed road load and simulated inertia errors are less than ± 0.3 percent for light-duty trucks.

1.4.5.2 Constant Volume Sampling System

A Horiba Variable-Flow constant volume sampling (CVS) system was used to sample exhaust emissions. Figure 1-1 is a CVS system schematic.[1]

The vehicle exhaust pipe is connected to the CVS inlet. An adjustable-speed turbine blower pulls ambient air into the CVS while the vehicle operates on the dynamometer. The air is used to dilute the exhaust stream to prevent the exhaust moisture from condensing and provide controllable sampling conditions to the analyzers (specifically, sample flow rate). A sample pump and control system transfer diluted exhaust to several different Tedlar bags during specific phases of each FTP and HFET test run. A regulating needle valve maintains a constant sample flow rate into the bags.

The balance of the dilute exhaust passes through a Horiba smooth-approach orifice (SAO) which measures the flow rate. The bag sampling rate must remain proportional to the total dilute exhaust volume flow rate throughout each test run to ensure that the sample represents the entire volume. SAO

throat pressure and temperature measurements using calibrated pressure and temperature transducers, correlated with the SAO's National Institute of Standards and Technology (NIST) - traceable calibration, allow accurate dilute exhaust volume determinations. This determination generates a feedback signal that adjusts the turbine blower speed. The continuous adjustment allows the blower to maintain constant volumetric flow through the CVS system. The CVS both measures the dilute exhaust volumetric flow and controls the sample dilution ratio to within ±0.5 percent.

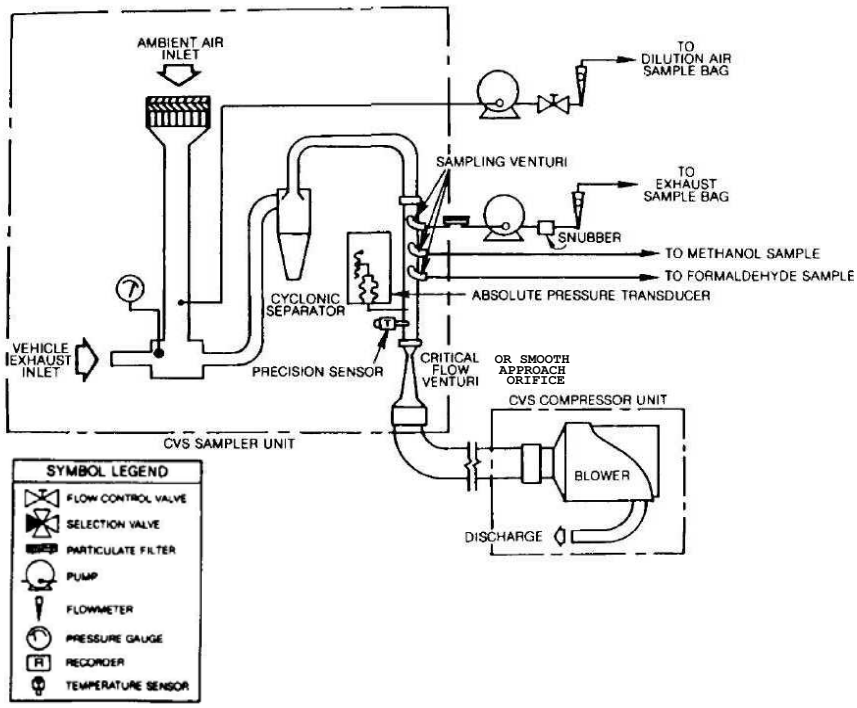

Figure 1-1. CVS System Schematic

1.4.5.3 Emission Analyzers

Technicians used a Horiba analytical bench equipped with instrumental analyzers to determine carbon monoxide (CO), carbon dioxide (CO_2), total hydrocarbons (THC), methane (CH_4) and nitrogen oxides (NO_X) concentrations in the dilute exhaust. Each analyzer is accurate to ±2 percent. Sample pumps transfer the dilute exhaust from the sample bags to each analyzer as commanded by the control system. Figure 1-2 is a schematic of the instrumental analyzer system.[3]

The Horiba triple analytical bench consists of feedgas, tailpipe and bag analytical benches, a sample-conditioning unit, and various automated flow controls. The Horiba instrumental emission analyzers used to analyze exhaust emissions using the CVS bag cart are:

- AIA-210 Infrared Low-Low CO Analyzer (LLCO)
- AIA-220 Infrared CO_2 and Low CO Analyzer (CO_2/LCO)
- FIA-220 Flame Ionization Total Hydrocarbons (THC) Analyzer
- CLA-220 Chemiluminescent NO/NO_x Analyzer
- GC-FIA Gas Chromatographic/Flame Ionization Methane Analyzer

Sampling, analysis, dynamometer monitoring, and other equipment or processes, including bag leak checks, calibrations, and analyzer zero/span checks are all controlled by a Horiba VETS-9200 computerized emissions testing control system. The VETS-9200 collects data from the test equipment, calculates and reports test results, and facilitates system calibrations and quality control checks. The VETS also records raw sensor outputs, applies the appropriate engineering conversion and averaging algorithms, and flags data which are outside the permitted values.

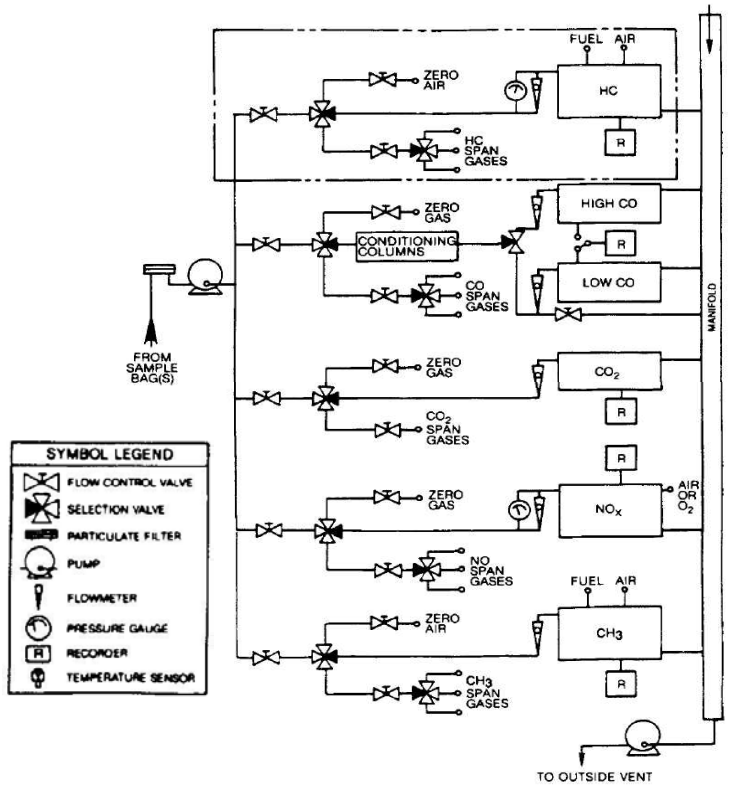

Figure 1-2. Instrumental Analyzer System

1.4.5.4 Ambient Monitoring Equipment

Ambient conditions of the test area can affect test results and analyses. SwRI maintains the test site at 74 ±2 ^{o}F with target humidity control of 70 ±10 grains of water per pound of dry air. Technicians measure dry and wet bulb temperatures with an Industrial Instruments and Supplies "Psychro-dyne" wet and dry bulb thermometer. Accuracy is ±0.5^{o}F, as verified with a NIST-traceable calibration thermometer. Temperature data is input into the VETS-9200 systems and actual humidity is calculated by the system. Barometric pressure in the test site is uncontrolled. SwRI uses a barometer that is calibrated weekly to ±0.01" Hg with a NIST-traceable barometer to determine test site barometric pressure.

1.4.5.5 Fuel Cart

An external cart fueled the vehicle from a five-gallon fuel container during testing. The fuel container was filled from a single certified batch of test fuel throughout the test period. Analysis of test fuel samples was completed to ensure compliance with test fuel specifications in 40 CFR 86-113. The test fuel is

discussed further in Sections 1.4.6.6 and 3.2.5. The fuel cart was used to determine gravimetric and volumetric fuel consumption for use in performing fuel economy cross-check calculations during testing. Figure 1-3 shows a schematic of the equipment involved.

The fuel container rests on a Fairbanks Model SB12-0806-5 scale. The scale's range is from 0 to 60 lb, ±0.5 percent of reading. The fuel passes through a Max Machinery Model 213 positive-displacement piston-type volumetric flow meter with maximum flow rate of 0.4 gal/min, ±0.75 percent of reading. A day tank with a level controller maintains a constant circulating flow for vehicles equipped with a fuel return system on the engine fuel rail, such as the test vehicle. This ensures that the fuel cart functions in a manner similar to the vehicle's original fuel system. The flow meter records the make-up flow to the day tank.

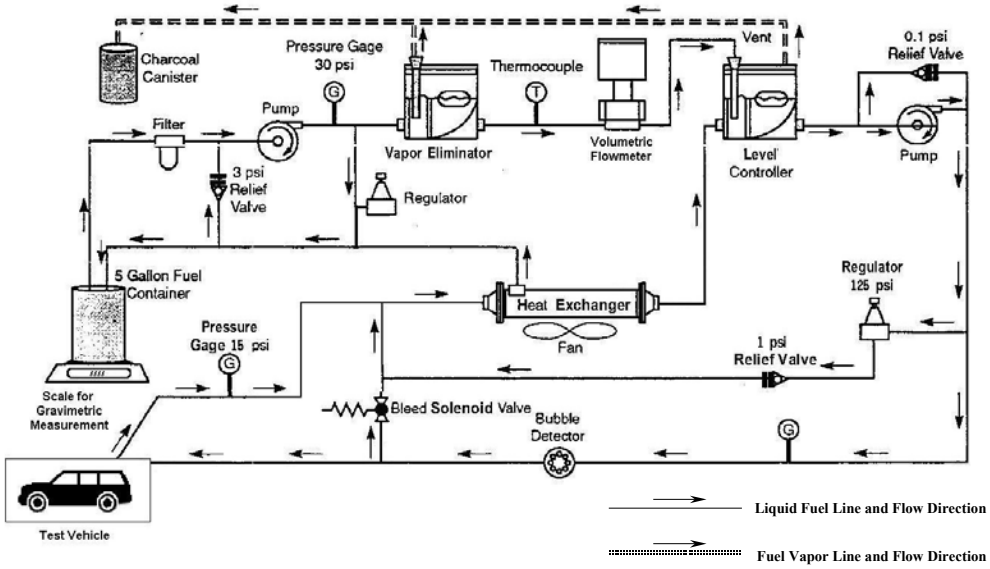

Figure 1-3. Fuel Cart Schematic

1.4.6 Testing Procedure and Sequence

The test procedures and details regarding each phase of the test are described in the test plan and summarized in the following sections.

1.4.6.1 Vehicle Receipt and Initial Preparation

The test vehicle was obtained from a local rental agency fleet on March 26, 2003. The vehicle selection process was described in Section 1.3.2 of this report. SwRI completed an inspection of the vehicle. Technicians verified proper vehicle function and documented all pertinent test vehicle information upon receipt of the vehilcle. Copies of test vehicle receipt documents are on file with the GHG Center. The Ford F-150 that was received was accepted as the test vehicle, pending inspection of the rear axle and gears during the initial axle lubricant change.

1.4.6.2 Engine Oil Change and Driver Familiarity Runs

SwRI used a triplicate oil flush and fill procedure in combination with driver familiarity runs (the same driver is used for all test runs) to ensure a proper flushing of the engine oil system and installation of fresh oil prior to testing. SwRI technicians completed the engine oil flush and driver practice for the reference lubricant runs on March 27, 2003. The engine oil change for the FEHP runs was completed on April 16, 2003. The engine oil change for the second set of reference lubricant runs was completed on May 15, 2003. The procedure for all engine oil changes consisted of installing the vehicle on the Chassis dynamometer, running a FTP and single HFET driving cycle (both for driver familiarity and to ensure a hot oil drain), draining the oil, changing the filter, and filling with oil. This series was completed three times for each oil change. The engine oil used for all oil changes was Motorcraft brand SAE 5W20 motor oil, as recommended by the vehicle manufacturer. The vehicle was filled with 6.675 quarts of oil during each oil change. Technicians provided documentation of each oil change procedure. This entire procedure was observed by the SRI field team leader or SwRI Project Manager.

1.4.6.3 Rear Axle Lubricant Changes

The test vehicle was delivered to the SwRI Fleet Lab for changing the rear axle gear lubricant to the reference lubricant on March 27 and May 15, 2003. The change of FEHP lubricant was completed on April 17, 2003. SwRI Fleet Lab personnel completed the rear axle lubricant change procedure documented in the Test Plan Appendix A-3 with some exceptions noted by SRI. Documentation of the reference and FEHP rear axle lubricant changes, as well as engine oil changes, is maintained by the GHG Center.

The axle lubricant changes and initial axle inspection involved cleaning the exterior of the axle housing to remove loose dirt and debris. Technicians removed the wheels, brakes and rotors, and rear cover of the axle differential. The existing lubricant was allowed to drain. This used lubricant was collected in a preweighed pan to determine the amount of lubricant in the axle system and for inspection of the lubricant for wear, debris, etc. Technicians then removed the axle shafts. The shafts, gears, and accessible areas of the axle were wiped clean with absorbent pads. Interiors of axle shafts were not wiped as described in the test plan due to the interference with bearings and associated retention clips (see CAR #2). The axles, gears, and associated parts were sprayed thoroughly with NAPA Max 4800 Brake Cleaner to remove residual lubricant. Compressed air was used to force lubricant and solvent out of the axle tubes into the gear box, as well as to ensure solvent was evaporated and no residual lubricant remained. The cleaning was continued until the SRI field team leader or SwRI Project Manager observed no residual lubricant or solvent.

The axle shafts were reinstalled (each shaft only fits in the vehicle on a specific side) after thorough cleaning and inspection. The spider pin, securing the pinion and gears, was reinstalled and secured using a torque of 22 ft lbs. A sealant (Permatex 34311 "Right Stuff for Imports") specified by the axle vendor was installed on the rear cover using a 1/8-inch bead along the outer edge, the inner edge, and around bolt holes. The rear axle cover was reinstalled. All bolts were tightened to 33 ft lbs of torque. The sealant was then left to cure overnight (a minimum of four hours is recommended).

The appropriate amount of axle lubricant (5.5 pints), as recommended by the manufacturer, was measured using a clean graduated cylinder after the rear cover sealant cured. Reference lubricant was installed in the axle by pouring from the graduated cylinder back into the product bottles (reference lubricant) and charging through the fill hole. Final quantities of reference lubricant were charged using a clean syringe. The axle was charged with FEHP lubricant by pouring from the graduated cylinder into a funnel connected to clean tygon tubing that was inserted into the fill hole. Technicians verified fill levels for

both lubricants at approximately ½ inch below the bottom of the differential fill hole. The fill hole and vent plugs were then replaced. The parking brake adjuster was backed off and brakes and wheels reinstalled on the test vehicle.

1.4.6.4 Vehicle and Axle Inspection and Gear Rating

An SwRI certified gear rater inspected and rated the axle and gears during cleaning and installation of the reference lubricant to ensure proper axle functioning for the testing process. SwRI retains certified inspectors on staff for conducting such inspections. The axle, gears, seals, and bearings were inspected visually and measurements taken to determine if any excess wear or damage to the axle was present. SwRI completed and documented the following inspections:

- Visual inspection of old lubricant
- Verification of axle ratio
- Visual inspection and rating of gears, axle shafts, bearings, and seals
- Video bore scope of ring and pinion teeth and housing interior
- Digital photographs of ring and pinion teeth
- Video of all exposed shaft seals and bearings
- Measurement of break and turn
- Measurement of backlash

Documentation of these inspections is on file with the GHG Center. All inspections indicated that the axles had appropriate wear for the vehicle age, no damage, and measurements within specifications. Therefore, the field team leader approved the test vehicle and axle for use in the test protocol.

1.4.6.5 Mileage Accumulation

The vehicle was sent to SwRI's mileage accumulation facility after installation of each test lubricant to accumulate 1000 miles to ensure proper break-in of the axle and engine lubricants. Technicians mounted the vehicle on an eddy current-type mileage accumulation dynamometer (MAD) with 24-hour capabilities. The MAD system incorporates a computer-based control system to operate the vehicle. The control system maintains vehicle load and speed with a throttle actuator and electric motor. A large blower provides airflow proportional to vehicle speed across the vehicle for cooling.

The dynamometer was operated over the Durability Driving Schedule (DDS) specified in 40 CFR 86, Appendix IV. This test cycle is 4,960 seconds long at 29.5 mph average speed, including eleven 3.7-mile "laps" at various speeds. Accumulation of 1000 miles required approximately two days. Detailed mileage accumulation data logs are maintained by the GHG Center and SwRI.

1.4.6.6 Test Fuel and Fuel System Preparation

The vehicle fuel system was modified to accept fuel from the fuel cart system. SwRI technicians completed modifications to provide quick connection to the fuel cart for the fuel feed and return fuel lines. The fuel system was also drained and flushed prior to testing and only test fuel from a specified lot was used during testing. The test fuel used met the requirements specified in 40 CFR 86.113. SwRI completed analyses of the test fuel to verify fuel properties. Table 1-4 specifies the allowable and actual test fuel properties for two fuel samples. Test fuel analyses provided by the manufacturer and analytical results provided by SwRI are on file with the GHG Center. Test fuel quality and analytical data quality are discussed further in Section 3.2.5.

Table 1-4: Test Fuel Specifications			
Parameter	**Allowable Result**	**Actual Result**	
Sample ID		**ETV1**	**ETV2**
Octane, research	93 minimum	96.7	96.8
Sensitivity (research octane minus motor octane)	7.5 minimum	7.8	7.8
Lead	0.050 g/U.S. gal maximum	<0.001g/gal	<0.001 g/gal
Distillation range			
Initial Boiling Point	75 to 95°F	93.3°F	94.9°F
10 pct. Point	120 to 135°F	128.5°F	129.6°F
50 pct. Point	200 to 230°F	219.5°F	220.6°F
90 pct. Point	300 to 325°F	319.6°F	321.4°F
End Point	415 °F maximum	406.8°F	404.9°F
Sulfur	0.10 wt. percent maximum	0.0033%	0.0032%
Phosphorus	0.005 g/US gallon maximum	0.0001 g/gal	<0.0001g/gal
Reid Vapor Pressure	8.0 to 9.2 psi	9.15	9.11
Hydrocarbon composition			
Olefins, max. pct	10% maximum	1.0	0.8
Aromatics, max. pct	35% maximum	30.9	31.2
Saturates	remainder	68.1	68

1.4.6.7 Dynamometer Setup

The chassis dynamometer requires appropriate setup to ensure proper road load and inertia simulation specific to the test vehicle. SwRI technicians completed triplicate 65- to 15-mph coastdowns on each axle with the reference lubricant initially installed in the rear axle and again with the FEHP in the rear axle. This data was used to define the appropriate setup data. The coastdown data was used as input to the Mears Model according to EPA-recognized least-square methods. The Mears Model calculates a three-parameter road load force equation for dynamometer fuel economy tests.[7] This model incorporates frictional coastdown data from drive and non-drive axles with wind and aerodynamic resistance projections to yield the dynamometer force simulation equation "a", "b", and "c" coefficients. Dynamometer setup coefficients were obtained for each lubricant to ensure that lubricant changes would not improperly affect dynamometer simulation. The same front axle coastdown data was used in both Mear's Model calculations to determine dynamometer coefficients because lubricants were not changed in the front axle. SwRI used the triplicate coastdown data with the Mears Model to yield the following dynamometer setup coefficients for each set of test runs:

Table 1-5: Dynamometer Setup Coefficients			
Dynamometer coefficient	**Reference Lubricant-Initial**	**FEHP Lubricant**	**Reference Lubricant-Final**
A	19.37	19.37	19.37
B	0.31504	0.31504	0.31504
C	0.03248	0.03241	0.03227

Proper dynamometer setup and simulation was verified by completing triplicate coastdown checks. These data quality checks are discussed further in Section 3.2.1.

1.4.6.8 Bag Cart and Emission Analyzer Setup

Exhaust sampling is conducted during four phases of the fuel economy test driving schedule. This is described further in Section 1.4.7. The exhaust is diluted with ambient air primarily to avoid condensation and, in this case, to ensure that sample concentrations were within the calibrated span of the analytical bench. Technicians determined estimated vehicle emission concentrations that were used to estimate CVS bag flow rates for input into the VETS 9200 system. CVS flow rates used for each of the four phases of fuel economy testing were 450 scfm, 350 scfm, 450 scfm, and 550 scfm, respectively based on results of preconditioning runs. The flow rates were determined for each individual phase to ensure that concentrations for each pollutant were within analyzer spans. This was also done to ensure that concentrations from each phase were within the same span for the CO_2 analyzer for all phases. This limited sampling and analytical variability during testing by limiting the number of calibration gases used during analyzer spans.

Ambient air samples are simultaneously collected and analyzed in conjunction with exhaust sampling. The VETS 9200 system automatically determines the dilution factor for the collected exhaust and ambient pollutant concentrations for the dilution air. The system then calculates the actual exhaust concentration based on the dilution rate, the dilute sample concentration, and ambient concentration for the bag pair for each phase.

Technicians set the emission analyzer ranges (as shown in Table 1-6) based on the programmed CVS flow rates. A higher CO range was required for phase 1 because it is a cold-start phase that typically results in higher CO emissions.

Table 1-6: Emission Analyzer Ranges

	Phase 1(FTP)	Phase 2 (FTP)	Phase 3 (FTP)	Phase 4 (HFET)
CO	0-200 ppm	0-25 ppm	0-25 ppm	0-25 ppm
CO_2	0-4.0%	0-4.0%	0-4.0%	0-4.0%
NO_x	0-10.0 ppm	0-10.0 ppm	0-10.0 ppm	0-10.0 ppm
THC	0-30 ppm C	0-30 ppm C	0-30 ppm C	0-30 ppm C
CH_4	0-10 ppm	0-10 ppm	0-10 ppm	0-10 ppm

1.4.6.9 Vehicle Preconditioning

The test vehicle was "preconditioned" prior to beginning a series of test runs or after any soak period greater than 24 hours. Preconditioning consists of running the vehicle through a complete fuel economy test cycle (FTP and HFET) to condition the vehicle to the test cycle. Preconditioning is an attempt to limit variability in testing by allowing the vehicle's adaptive controls to become familiar with the test driving cycle.

Triplicate coastdown checks were run to verify proper dynamometer setup and road-load simulation during each test period. This was performed either after a test run or after a preconditioning run. The

driver ran the vehicle through a single HFET cycle after coastdowns to ensure consistency in the vehicle driving patterns from test to test. This ensures that the last driving cycle the test vehicle saw prior to soak and the next test was a HFET cycle.

1.4.7 Reference Lubricant and FEHP Fuel Economy Test Procedure

The vehicle was returned to the SwRI light-duty testing facility after mileage accumulation where it was stored overnight in a shed inside the facility. The fuel economy testing procedure began after preconditioning. The test vehicle was operated over two test cycles to determine fuel economy: (1) the FTP as specified in 40 CFR 86.115 and (2) the HFET specified in 40 CFR 600 Appendix I. The FTP simulates an 11-mile trip in an urban area. It includes stop-and-go driving, multiple vehicle starts, and a short freeway driving segment. Average speed is about 20 miles per hour. It consists of four phases: (1) a cold-start "transient" phase; (2) a stabilized phase; (3) a 10-minute soak period (vehicle off); and (4) a hot-start transient phase.

The highway portion of the test (HFET) commenced immediately following the end of the FTP segment. This dynamometer run employs a "hot" vehicle start and represents a 10-mile trip with an average speed of 48 mph with little idling and no stops. The HFET cycle consists of a warm-up phase and the sampling phase during which exhaust samples are collected.

Table 1-7 summarizes the daily test procedure. The Horiba VETS 9200 controlled most of the testing procedure automatically based on user inputs. The sampling procedure for each test sampling phase consisted of the completion of an initial screening test to verify the required analyzer span, an automated zero and span check using system calibration gases, analysis of bag samples, recheck of analyzer zeroes, and calculation of emission rates and fuel economy. Technicians completed a daily test checklist to summarize the test procedures, test parameters, and some QA/QC checks.

The vehicle was stored in the same location overnight inside the light-duty testing area. Temperature and humidity are controlled within the light-duty testing area. The test vehicle was stored in an open shed inside the test area. The fuel cart and test fuel container were also stored in the same areas to ensure consistency.

The Test Plan states that a maximum of seven reference lubricant tests were to be performed. SwRI completed eight initial reference lubricant test runs, including three tests that were voided, resulting in a total of five valid initial reference lubricant test runs. The axle lubricant was changed to the FEHP lubricant and seven FEHP test runs were completed. One FEHP test run was voided, resulting in the completion of six valid FEHP test runs. After completion of the FEHP testing, the axle lubricant was changed back to the reference lubricant, and the entire test procedure repeated for six additional valid tests (including mileage accumulation, engine oil changes, etc.). Test runs were voided based on results of specific QA/QC checks or equipment error, as discussed in Section 2.1.1. This test procedure allowed the GHG Center to verify that the fuel economy improvement observed was attributable solely to the use of the FEHP lubricant and not to changes in vehicle performance as the result of additional mileage accumulation and vehicle break-in over the course of the test period.

Table 1-7: Daily Test Procedure	
1	Warm up dynamometer for a minimum of 15 minutes at average speed of 50 mph
2	Run a parasitic friction curve on the dynamometer and verify no losses > +/- 2.0 lbf
3	Setup Horiba VETS 9200 for test vehicle
4	Push vehicle from soak area onto dynamometer and tie down
5	Record vehicle odometer reading
6	Check vehicle tire pressure and inflate, if necessary
7	Install fuel cart system
8	Install fan
9	Determine ambient conditions and input into VETS 9200
10	Begin VETS 9200 testing procedure
11	Verify automatic bag leak check completed
12	Verify proper CVS flow rate
13	Start fuel cart and allow to circulate
14	Start Phase 1 (FTP) of test (samples automatically collected)
15	End Phase 1 – Begin Phase 2 (FTP)
16	Complete automatic analysis of Phase 1 samples
17	End Phase 2, Complete 10-minute soak. Begin Phase 3 (FTP)
18	Complete automatic analysis of Phase 2 samples
19	End Phase 3 – Begin Phase 4 (HFET)
20	Complete automatic analysis of Phase 3 samples
21	End Phase 4
22	Complete automatic analysis of Phase 4 samples
23	Disconnect vehicle and push to inside shed for overnight soak.

1.4.8 Reference Lubricant and FEHP Fuel Economy Determination

Composite fuel economy is determined from the quantity of carbon in the vehicle exhaust emissions measured during the two driving cycles, the amount of carbon in the fuel, and the distance driven on the dynamometer. This is the "carbon balance" method. This method generates a fuel economy value (in mpg) by dividing the carbon mass in the fuel per unit volume by carbon mass in the emissions per mile:

$$mi/gal\,(or\ mpg) = \frac{g_{carbon,fuel}/gal}{g_{carbon,emissions}/mi} \qquad \text{(Eqn. 9)}$$

where:

mpg = vehicle fuel economy, miles per gallon
g = grams of carbon
mi = miles

The calculation relies on determination of carbon masses based on CO, CO_2, and THC mass emission rates (in grams per mile or g/mi) as measured by the Horiba VETS 9200 emission testing system, the measured test fuel carbon weight fraction, fuel specific gravity, and net heating value (as determined by test fuel analyses). Emission rate determination procedures are specified in 40 CFR 80.144-94.

Weighted mass emissions are determined for the FTP cycle based on 40 CFR 86.114-94 criteria as follows:

$$Y_{wm} = 0.43\left[\frac{(Y_{ct} + Y_s)}{(D_{ct} + D_s)}\right] + 0.57\left[\frac{(Y_{ht} + Y_s)}{(D_{ht} + D_s)}\right] \qquad \text{(Eqn.10)}$$

where:

Y_{wm}	=	weighted mass emissions of each pollutant, g/mi
Y_{ct}	=	mass emissions of each pollutant from the cold-start "transient" phase (Phase 1), g/mi
Y_s	=	mass emissions of each pollutant from the cold-start "stabilized" phase (Phase 2), g/mi
Y_{ht}	=	mass emissions of each pollutant from the hot-start "transient" phase (Phase 3), g/mi
D_{ct}	=	Driving distance for the cold-start "transient" phase, mi
D_s	=	Driving distance for the cold-start "stabilized" phase, mi
D_{ht}	=	Driving distance from the hot-start "transient" phase, mi

The FTP or HFET fuel economy is determined from 40 CFR 600.113 (e):

$$mpg = \frac{(5174 * 10^4) * CWF * SG}{[CWF * HC + (0.429 * CO) + (0.273 * CO_2)] * [0.6 * SG * LHV + 5471]} \qquad \text{(Eqn. 11)}$$

where:

mpg	=	miles per gallon
CWF	=	carbon weight fraction in the fuel
SG	=	fuel specific gravity
HC	=	total hydrocarbon emission rate, g/mi
CO	=	carbon monoxide emission rate, g/mi
CO_2	=	carbon dioxide emission rate, g/mi
LHV	=	fuel lower (or net) heating value, Btu/lb

The composite fuel economy depends on the FTP- and HFET-cycle fuel economies. The composite fuel economy is weighted based on the typical proportion of city (FTP) driving, 55 percent, to highway (HFET) driving, 45 percent, for light-duty vehicles as specified by the US EPA. The equation for composite fuel economy is:

$$mpg_{composite} = \frac{1}{\frac{0.55}{mpg_{FTP}} + \frac{0.45}{mpg_{HFET}}} \qquad \text{(Eqn. 12)}$$

where:

$mpg_{composite}$ = composite fuel economy, mpg

mpg_{FTP} = mean FTP fuel economy, mpg

mpg_{HFET} = mean HFET fuel economy, mpg

The mean fuel economy (to be used as input to Equation 1) for either the reference lubricant or the FEHP is:

$$\text{Mean Fuel Economy}(\mu) = \sum_{1}^{n} \frac{\text{mpg}_{\text{composite}}}{n} \qquad \text{(Eqn. 13)}$$

where:

μ = average of all valid reference lubricant or FEHP test runs, mpg

n = number of test runs

Additional detailed calculations of emission rates and fuel economy are contained in 40 CFR 86.144.

Fuel economy was also determined for each test run by separate volumetric and gravimetric methods using fuel cart data as a cross-check against the carbon balance method. The volumetric method correlates the volume of gasoline (gallons) consumed during a test run with the dynamometer distance traveled (miles) to yield mpg. The gravimetric method correlates the weight of gasoline consumed (grams), its density (g/l), and the dynamometer distance traveled (miles) to yield mpg.

1.4.9 Pollutant and GHG Emissions

Each fuel economy test also provided emissions data for greenhouse gases (CO_2, CH_4) and other pollutants (NO_X, CO, THC, and non-methane hydrocarbons [NMHC]). Emissions in g/mi are an intermediate determination during the fuel economy testing and calculation procedure and are automatically calculated by the Horiba VETS 9200 control system. Emission rates for CO, CO_2, NO_X, THC, and CH_4 are determined using the analytical equipment and procedures described in Sections 1.4.5 and 1.4.6. NMHC emission rates are calculated by the Horiba VETS 9200 based on the THC and CH_4 emission rates in accordance with 40 CFR 86.144. Section 2.5 summarizes the GHG emissions for the test vehicle for both the reference and FEHP lubricants.

2.0 VERIFICATION RESULTS

The test vehicle was acquired on March 26, 2003. Vehicle setup, axle lubricant change, mileage accumulation, and preconditioning occurred between March 26 and April 1, 2003. The fuel economy testing verification period started on April 2, 2003. Testing was completed on May 31, 2003.

The GHG Center acquired several types of data during the verification testing periods that represent the basis of verification results presented here. The following types of data were collected and analyzed during the verification:

- Test vehicle fuel economy with reference and FEHP lubricants
- Greenhouse gas and other pollutant emissions with reference and FEHP lubricants

Information was collected throughout the testing period to evaluate data quality and ensure the accuracy of verification results. This information and associated review are discussed further in Section 3.0 – Data Quality Assessment.

The field team leader reviewed, verified, and validated some data (test run results, statistical analysis, QA/QC data) while on-site. He reviewed collected data for reasonableness and completeness. The data from each of the fuel economy tests was reviewed on-site or within 24 hours, when possible, to verify that test criteria were met. The field team leader validated emissions testing data by reviewing instrument and system calibration data and ensuring that those and other reference method criteria were met. Calibration and verification data for test equipment, including the dynamometer, CVS system, analyzers, ambient monitoring equipment, and calibration gases were reviewed and verified prior to and during testing to ensure proper function and accuracy. The field team leader classified all collected data as valid, suspect, or invalid using the QA/QC criteria specified in the Test Plan. Review criteria were in the form of factory and on-site calibrations, maximum calibration and other errors, audit gas analysis results, and lab repeatability results. All results presented here are based on measurements that met the specified Data Quality Indicators (DQIs) and QC checks as validated by the GHG Center during the testing period. DQI goals were not completely satisfied for the entire test period (discussed in Section 3.0). However, this did not result in a loss of data quality, as all QA/QC checks were satisfied during testing and data quality objectives were met.

The observed fuel economy change resulting from use of the FEHP lubricant in the test vehicle (2003 Ford F-150 with beam axle) and the corresponding 95-percent confidence interval is:

$$\Delta = \mathbf{0.169 \pm 0.0410\ mpg}$$

Section 2.1 discusses the evaluation of the change in fuel economy. Section 2.2 discusses the statistical significance of the fuel economy change. Section 2.3 discusses the calculation of the 95-percent confidence interval of the fuel economy change.

The verification test results provide the fuel economy change for a single representative vehicle and axle setup (2003 Ford F-150 with beam axle) under the testing and driving conditions specified in the Test Plan. This test vehicle and axle setup represent a large portion of the light-duty trucks currently in production in the US. The test conditions and verification parameters were developed to obtain a reasonable and representative set of data to examine fuel economy savings resulting from the use of the FEHP lubricant in light-duty trucks. Performance at significantly different operating conditions or for different vehicle and axle types can, however, affect the results from these types of test programs.

2.1. FUEL ECONOMY IMPROVEMENT

2.1.1. Fuel Economy Test Results

The GHG Center determined the change in fuel economy attributable to the use of the FEHP lubricant in the rear axle of the test vehicle based on the means of several test runs of both the reference lubricant and the FEHP lubricant. Table 2-1 presents the composite fuel economy results of each individual test run and the mean fuel economy for each set of lubricant runs. The test data for runs Base-1 through Base-5R2 have been corrected for a CO_2 emissions analyzer calibration error, as discussed in Section 3.2.3.

Table 2-1: Fuel Economy Test Results

Test Run ID	***Date***	***Composite Fuel Economy (mpg)***
Reference Lubricant		
Base-1	4/2/03	18.070
Base-2	4/3/03	18.013
Base-3	4/4/03	(17.663) VOID – outlier
Base-4	4/8/03	17.994
Base-5	4/9/03	VOID – driver trace error
Base-5-R2	4/10/03	VOID – calibration gas error
Base-6	4/11/03	18.055
Base-7	4/12/03	17.973
Mean		**18.021**
Standard Deviation		**0.0408**
FEHP Lubricant		
FEHP-1	4/23/03	18.272
FEHP-2	4/24/03	VOID – equipment error
FEHP-2-R2	4/25/03	18.272
FEHP-3	4/29/03	18.284
FEHP-4	4/30/03	18.233
FEHP-5	5/1/03	18.263
FEHP-6	5/2/03	18.206
Mean		**18.255**
Standard Deviation		**0.0296**
Reference Lubricant		
Post Base-1	5/22/03	VOID – incorrect dyno settings
Post Base-1R2	5/23/03	18.208
Post Base-2	5/24/03	18.111
Post Base-3	5/28/03	18.143
Post Base-4	5/29/03	18.169
Post Base-5	5/30/03	18.121
Post Base-6	5/31/03	18.082
Mean		**18.139**
Standard Deviation		**0.0448**

Five test runs were voided after review of data and crosschecks or during testing for various reasons. The GHG Center voided reference lubricant run Base-5 because of a driver error. The driver is required to follow or "trace" a specified route during the test period. The accuracy of the driving trace must meet certain specifications set forth in the CFR. The driver compiled a deviation from the simulation speed that exceeded the trace error limits for 2.0 seconds. Therefore, this run was invalidated in accordance with the CFR requirements.

A review of test results and gravimetric and volumetric cross-checks for run Base-5R2 indicated inconsistency in the data when compared to other runs. SwRI reviewed the data and determined that the 4-percent CO_2 calibration gas ran low during the test, causing error in the CO_2 measurement. The GHG Center therefore voided run Base-5R2.

Technicians determined that the bags for sample collection during run FEHP-2 were not properly installed on the CVS sampling system. Therefore, the run was invalidated due to "equipment error". The run was completed to ensure consistency in the test pattern, but data was discarded. Test run Post Base-1 was voided because the incorrect dynamometer settings were input into the Horiba VETS 9200 system prior to testing. Test run Base-3 was voided because it was determined to be an outlying data point as determined via the American Society for Testing Materials (ASTM) Standard Practice for Dealing with Outlying Observations (E 178-02). An outlying data point, as defined by ASTM, is one that appears to deviate markedly in value from other members of the sample in which it appears.[8] The analysis of run Base-3 as an outlier using the ASTM procedure is presented in Appendix E.

2.1.2. Fuel Economy Change

The fuel economy change resulting from the use of FEHP, as presented in Section 2.0, is calculated as discussed in Section 1.4 by comparing the FEHP fuel economy test results with the reference lubricant fuel economy test results. An initial review of the data indicates that there is an observed increase in fuel economy from each reference lubricant data set to the FEHP lubricant data set. There is also an observed increase in fuel economy from the initial reference lubricant runs to the final reference lubricant runs. Therefore, analysts must evaluate the reference lubricant data to determine the overall reference lubricant mean fuel economy for comparison to the FEHP mean fuel economy.

There are three ways that the fuel economy change and reference lubricant results can be analyzed:

(1) Determine that there is no statistical difference in reference lubricant fuel economies from the initial to final data sets. In this case, all reference lubricant data is pooled and compared to the FEHP data.
(2) Compare each individual set of reference lubricant data to the FEHP data to obtain a range of fuel economy changes based on the two data sets.
(3) Determine that the two reference lubricant data sets are statistically different and cannot be directly pooled. Assume that the change in reference lubricant fuel economy from pre-FEHP to post-FEHP is the result of a systematic drift in vehicle performance. In this case, all data can be normalized to account for such systematic changes. The normalized reference lubricant data is then pooled and compared to the normalized FEHP data.

Section 2.1.3 presents the statistical evaluation of the reference lubricant fuel economy to determine which of the three fuel economy change calculations is most appropriate for data analysis. Section 2.1.4 applies the fuel economy change calculation. Section 2.2 discusses the evaluation of the statistical significance of the fuel economy change. Section 2.3 presents the calculation of the confidence interval

for the fuel economy change. Section 2.4 describes the application of the other two calculation methods to determine fuel economy change as a cross-check.

2.1.3. Reference Lubricant Fuel Economy

Analysts evaluated the two sets of reference lubricant fuel economy data (discussed in Section 1.4.4) to determine the statistical significance of the difference in mean fuel economy between the data sets. An F-test (discussed in Section 1.4.2) was completed on the two reference lubricant data sets to compare the data variance of the two groups. Table 2-2 presents the results of the F-test.

Table 2-2: F-test Evaluation of Reference Lubricant Fuel Economy Data Set Variances

Parameter	Value
Standard Deviation, initial reference lubricant tests (mpg)	0.0408
Standard Deviation, final reference lubricant tests (mpg)	0.0448
F_{test}	1.207
$F_{0.05}$	5.192
$F_{test} < F_{0.05}$ (variances statistically equivalent)?	Yes

Results of the F-test indicate that the two sets of reference lubricant data have equivalent variances at a 95-percent confidence level. Therefore, analysts applied the t-test to evaluate the statistical significance of the change in fuel economy between the two reference lubricant data sets. Table 2-3 presents the results of the t-test analysis for the two reference lubricant data sets.

The t-test results indicate that there is a statistically significant difference between the two reference lubricant fuel economy data sets at a 95-percent confidence level. This analysis and SwRI's previous experience indicate that it is likely that the change in fuel economy is the result of a systematic drift in vehicle performance due to mileage effects or other phenomena. Therefore, analysts calculated the fuel economy improvement using the method discussed in Section 2.1.4.

Table 2-3: Statistical Analysis Of Reference Lubricant Tests-Fuel Economy Difference

Parameter	Value
Initial reference lubricant standard deviation (mpg)	0.0408
Final reference lubricant standard deviation (mpg)	0.0448
Mean fuel economy – initial reference lubricant (mpg)	18.021
Mean fuel economy – final reference lubricant(mpg)	18.139
Change in fuel economy (mpg)	0.118
Change in fuel economy (%)	0.655
COV-Initial reference lubricant (%)	0.226
COV-Final reference lubricant (%)	0.247
Initial reference lubricant test count	5
Final reference lubricant test count	6
Total count	11
Degrees of freedom	9
$(\text{Pooled std. dev.})^2$	0.0019
(Pooled std. dev.)	0.043
Critical t-distribution value ($t_{0.025, DF}$)	2.262
Calculated t-test value, t_{test}	4.525
$t_{test} > t_{0.025,DF}$ (Is the change statistically significant?)	YES

2.1.4. Fuel Economy Change

The two reference lubricant data sets are statistically independent based on the statistical analysis of the reference lubricant fuel economy data presented in Section 2.1.3. Analysts must compare the complete reference lubricant data set and FEHP lubricant test results to determine a representative fuel economy change resulting from the use of FEHP lubricant. No viable explanation for the shift in reference lubricant fuel economy was determined after review of test and QA/QC data. SwRI concluded that there was a "drift" in vehicle performance associated with the mileage accumulation on the test vehicle. The GHG Center evaluated the test data by making the assumption that, during this test period, vehicle drift occurred and the drift exhibits a linear behavior with fuel economy improving with mileage accumulation. The fuel economy data for all runs were normalized to remove the effects of the observed linear vehicle performance drift. Any fuel economy change calculated for the normalized data set was attributable solely to the FEHP lubricant and not mileage or other effects.

A linear regression was performed on the reference lubricant data (initial and final) to complete the normalization. This provides the linear drift relationship. Table 2-4 presents the results of the linear regression. Figure 2-1 presents the fuel economy results versus vehicle mileage with the linear regression results.

Table 2-4: Reference Lubricant Data Regression Statistics

Parameter	Value
Intercept	17.397
Slope	3.86E-05
Standard error – intercept	0.163
Standard error – slope	9.10E-06
R-square	0.6664
Regression sum of squares	0.0364
Residual sum of squares	0.0182
Observations	11

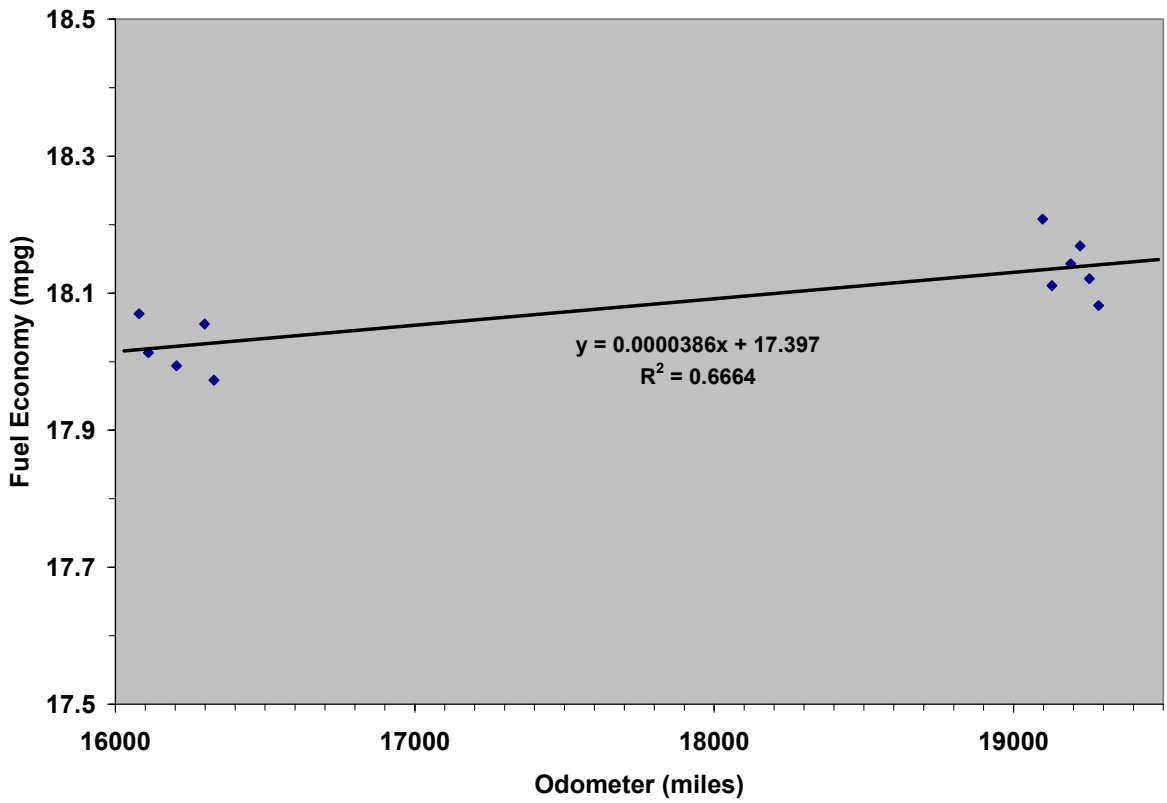

Figure 2-1. Variation of Reference Lubricant Fuel Economy Results with Mileage

All test data (reference lubricant and FEHP) was normalized to a common point for comparison based on the reference lubricant regression. The GHG Center normalized the test data to the y-intercept. Data was normalized using the following equation:

$$FE_{N,i} = FE_i \frac{b}{mx_i + b} \qquad \text{(Eqn. 14)}$$

where:

$FE_{N,i}$	=	normalized fuel economy for test run i
FE_i	=	fuel economy for test run i
m	=	slope of "drift" line
b	=	intercept of "drift" line
x_i	=	vehicle odometer reading at beginning of test run i

Table 2-5 presents the results of the normalization procedure. Figure 2-2 presents the normalized test results as a function of mileage.

Table 2-5: Normalized Fuel Economy Test Results

Test Run ID	Composite Fuel Economy (mpg)	Normalized Fuel Economy (mpg)
Reference Lubricant		
Base-1	18.070	17.448
Base-2	18.013	17.392
Base-4	17.994	17.370
Base-6	18.055	17.425
Base-7	17.973	17.345
Mean	**18.021**	**17.396**
Standard Deviation	**0.0408**	**0.0414**
FEHP Lubricant		
FEHP-1	18.272	17.588
FEHP-2-R2	18.272	17.584
FEHP-3	18.284	17.594
FEHP-4	18.233	17.543
FEHP-5	18.263	17.571
FEHP-6	18.206	17.515
Mean	**18.255**	**17.566**
Standard Deviation	**0.0296**	**0.0307**
Reference Lubricant		
Post Base-1R2	18.208	17.468
Post Base-2	18.111	17.374
Post Base-3	18.143	17.402
Post Base-4	18.169	17.426
Post Base-5	18.121	17.379
Post Base-6	18.082	17.340
Mean	**18.139**	17.398
Standard Deviation	**0.0448**	**0.0447**

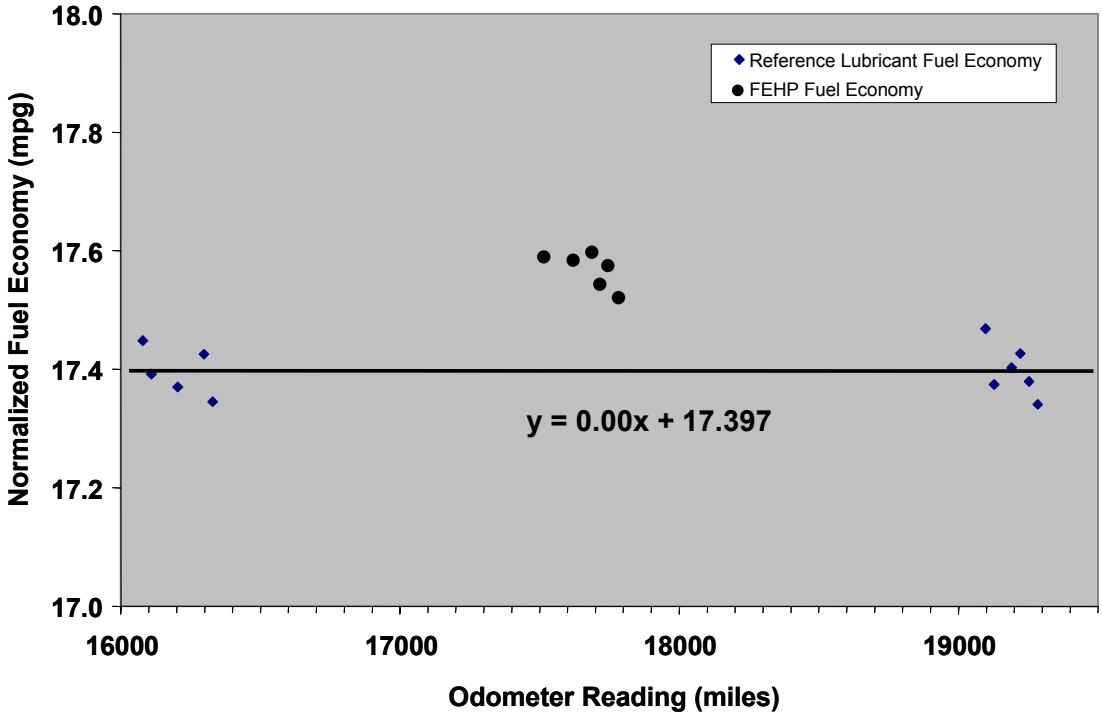

Figure 2-2. Comparison of Normalized Reference Lubricant and FEHP Fuel Economy Results

Analysts evaluated the normalized reference lubricant data to determine if the two data sets are from the same population and can, therefore, be pooled to determine a mean reference fuel economy for comparison to the normalized FEHP fuel economy. The normalized reference lubricant data was evaluated as discussed in Section 2.1.3. An F-test was initially completed on the two normalized reference lubricant data sets to compare the data variance of the two groups. Table 2-6 presents the results of the F-test.

Table 2-6: F-test Evaluation of Reference Lubricant Fuel Economy Data Set Variances

Parameter	Value
Standard deviation, initial reference lubricant tests (mpg)	0.0414
Standard deviation, final reference lubricant tests (mpg)	0.0447
F_{test}	1.166
$F_{0.05}$	5.192
$F_{test} < F_{0.05}$ (variances equal)?	Yes

Results of the F-test indicate that the two sets of normalized reference lubricant data have equivalent variances at a 95-percent confidence level. Therefore, analysts applied the t-test to evaluate the statistical significance of the change in fuel economy between the two normalized reference lubricant data sets. Table 2-7 presents the results of the t-test analysis for the two normalized reference lubricant data sets.

Table 2-7: Statistical Analysis of Normalized Reference Lubricant Fuel Economy Difference

Parameter	Value
Initial reference lubricant standard deviation (mpg)	0.0414
Final reference lubricant standard deviation (mpg)	0.0447
Mean fuel economy – initial reference lubricant (mpg)	17.396
Mean fuel economy – final reference lubricant (mpg)	17.398
Change in fuel economy (mpg)	0.002
Change in fuel economy (%)	0.011
COV-reference lubricant (%)	0.238
COV-FEHP lubricant (%)	0.257
Reference lubricant test count	5
FEHP test count	6
Total count	11
Degrees of freedom	9
$(\text{Pooled std dev})^2$	0.0019
(Pooled std dev)	0.043
Critical t distribution value ($t_{0.025, DF}$)	2.262
Calculated t-test value, t_{test}	0.076
$t_{test} > t_{0.025,DF}$ (Is the change statistically significant?)	NO

The t-test results indicate that there is not a statistically significant difference between the two normalized reference lubricant fuel economy data sets at a 95-percent confidence level. The two data sets have statistically equivalent means and are from the same population. Therefore, the reference lubricant data was pooled. Table 2-8 presents the results of the pooled reference lubricant data analysis.

Table 2-8: Summary of Pooled Normalized Reference Lubricant Data

Parameter	Value
Reference lubricant mean normalized fuel economy (mpg)	17.397
Standard deviation (mpg) – pooled normalize reference lubricant	0.0411
COV-pooled normalized reference lubricant (%)	0.236

The mean pooled, normalized reference lubricant fuel economy is compared to the mean normalized FEHP fuel economy to determine the change in fuel economy resulting from the use of the FEHP lubricant. The calculated fuel economy improvement attributable to the use of the FEHP lubricant in the test vehicle is

$$\Delta = 17.566 \text{ mpg} - 17.397 \text{ mpg} = 0.169 \text{ mpg}$$

This represents a **0.97 percent** improvement in fuel economy using the FEHP lubricant when compared to the reference lubricant fuel economy.

Sections 2.3 and 2.4 present the evaluation of the statistical significance and the determination of the 95-percent confidence interval of the calculated fuel economy improvement. Section 3.0 provides a further assessment of the quality of data collected throughout the verification period. The data quality assessment is used to demonstrate whether or not the data quality objectives (DQOs) introduced in the Test Plan were met for this verification.

2.2. FUEL ECONOMY CHANGE STATISTICAL SIGNIFICANCE

The GHG Center analyzed the calculated fuel economy change data as discussed in section 2.1 to determine the statistical significance of the data. Table 2-9 summarizes the results of this analysis.

Table 2-9: Statistical Analysis of Normalized Fuel Economy Change

Parameter	Value
Normalized reference lubricant standard deviation (mpg)	0.0411
Normalized FEHP lubricant standard deviation (mpg)	0.0307
Mean fuel economy – normalized reference lubricant (mpg)	17.397
Mean fuel economy – normalized FEHP (mpg)	17.566
Change in fuel economy (mpg)	0.169
Change in fuel economy (%)	0.971
COV-reference lubricant (%)	0.236
COV-FEHP lubricant (%)	0.175
Reference lubricant test count	11
FEHP test count	6
Total count	17
Degrees of freedom	15
(Pooled standard deviation)^2	0.0014
(Pooled standard deviation)	0.038
Critical t distribution value ($t_{0.025, DF}$)	2.131
Calculated t-test value, t_{test}	8.777
$t_{test} > t_{0.025,DF}$?	YES

Section 1.4.2 stated that if the t-test for the verification test data is greater than the t-distribution values using a 95-percent confidence coefficient, the measured fuel economy change is deemed statistically significant. A statistically significant fuel economy savings was observed based on the analysis shown in Table 2-9. The confidence interval for the fuel economy savings was therefore calculated.

2.3. FUEL ECONOMY SAVINGS CONFIDENCE INTERVAL

The 95-percent confidence interval represents the range of values in which 95 percent of the fuel economy data is expected to lie. A narrow confidence interval indicates a sharply characterized mean fuel economy change. The method used to determine the 95-percent confidence interval depends upon the relative variability, or variances, of the data set for each lubricant. Equation 7 can be applied to data sets with similar variances to determine the 95 percent confidence interval half-width. The evaluation of relative variance is completed using the F-test (Section 1.4.2). Results for the F-test evaluation are presented in Table 2-10.

Table 2-10: F-test Evaluation of Normalized Fuel Economy Data Set Variances	
Parameter	**Value**
Standard deviation, normalized reference lubricant tests (mpg)	0.0411
Standard deviation, normalized FEHP tests (mpg)	0.0307
F_{test}	1.785
$F_{0.05}$	4.735
$F_{test} < F_{0.05}$? (Variances statistically equivalent?)	Yes

The F-test evaluation indicates that the variances of the normalized reference lubricant data set and the normalized FEHP data set are similar. Therefore, the confidence interval for the standard data set is calculated using Equation 7 in Section 1.4.3. The 95-percent confidence interval for the fuel economy change for this data set is **0.0410 mpg.**

The fuel economy change resulting from the use of the FEHP lubricant is reported as:

$$\Delta = \mathbf{0.169 \pm 0.0410\ mpg}$$

2.4. FUEL ECONOMY CHANGE CALCULATION CROSS-CHECKS

The fuel economy change was also evaluated using two additional methods. Fuel economy change was initially calculated using the mean of each reference lubricant data set for comparison to the FEHP lubricant fuel economy. Analysts calculated a minimum and maximum fuel economy change based on the test data. The statistical analyses specified in the test plan and discussed in Sections 1.4.2 and 1.4.3 were applied to both fuel economy calculations. Table 2-11a summarizes the results.

This method shows that the fuel economy change ranges from 0.116 ±0.0479 mpg to 0.234 ±0.0488 mpg. This is equivalent to a 0.64-percent to 1.3-percent fuel economy improvement for the test vehicle.

A second method to evaluate the fuel economy improvement is to assume that the change in reference lubricant fuel economy from initial to final testing is simply the result of test variability. Therefore, all reference lubricant data is pooled together regardless of the t-test evaluation of statistical significance of the difference between the two data sets. The mean and variance are then calculated for the entire data set. Analysts compare the pooled mean to the FEHP fuel economy and calculate the fuel economy change. The statistical significance of the calculated fuel economy change is again evaluated using the methods described in Section 1.4.2 and the confidence interval determined using the methods discussed in Section 1.4.3. Table 2-11b presents a summary of the results of this analysis.

Table 2-11a: Fuel Economy Change Cross-Check Calculations		
Parameter	**Initial Reference Lubricant Tests vs. FEHP**	**Final Reference Lubricant Tests vs. FEHP**
Reference lubricant standard deviation (mpg)	0.0408	0.0448
FEHP lubricant standard deviation (mpg)	0.0296	0.0296
Mean reference lubricant fuel economy (mpg)	18.021	18.139
Mean FEHP lubricant fuel economy (mpg)	18.255	18.255
Change in fuel economy, delta (mpg)	0.234	0.116
Change in fuel economy, delta (%)	1.298	0.640
COV-Reference lubricant (%)	0.226	0.247
COV-FEHP lubricant (%)	0.162	0.162
Reference lubricant test count	5	6
FEHP lubricant test count	6	6
Total test count	11	12
Degrees of freedom	9	10
Squared pooled standard deviation	0.0012	0.0014
Pooled standard deviation	0.035	0.038
Critical t-distribution Value ($t_{0.025, DF}$)	2.262	2.228
Calculated t-test value, t_{test}	11.043	5.294
Is a statistically significant change ($t_{test} > t_{0.025,DF}$)?	YES	YES
F_{test}	1.904	2.297
$F_{0.05}$ from tables	5.192	5.050
Pass F-test ($F_{test} < F_{0.05}$)?	Yes	Yes
95% confidence interval (e) (mpg)	0.0479	0.0488
95% confidence interval as percentage of mean fuel economy change (%)	20.5	42.1
Required confidence interval for data quality objective (DQO)	0.1404	0.12
Meets CI DQO (95% CI < 60% of delta)?	Yes	Yes

Table 2-11b: Fuel Economy Change Cross-Check Calculations	
Parameter	**Pooled Reference Lubricant vs. FEHP Lubricant Fuel Economy**
Reference lubricant standard deviation (mpg)	0.0739
FEHP lubricant standard deviation (mpg)	0.0296
Mean reference lubricant fuel economy (mpg)	18.085
Mean FEHP lubricant fuel economy (mpg)	18.255
Change in fuel economy, delta (mpg)	0.170
Change in fuel economy, delta (%)	0.938
COV-reference lubricant (%)	0.409
COV-FEHP lubricant (%)	0.162
Reference lubricant test count	11
FEHP lubricant test count	6
Total test count	17
Degrees of freedom	15
Squared pooled standard deviation	0.0039
Pooled standard deviation	0.063
Critical t distribution value ($t_{0.025, DF}$)	2.131
Calculated t-test value, t_{test}	5.328
Is a statistically significant change ($t_{test} > t_{0.025,DF}$)?	YES
F_{test}	6.257
$F_{0.05}$ from tables	4.735
Pass F-test ($F_{test} < F_{0.05}$)? (If no,use Satterthwaite)	No
Satterthwaites Approximation	
Approximate t_{test} statistic, t'	6.692
Degrees of freedom, DF (from Satterthwaite)	14.269
Critical t-distribution value ($t`_{0.025, DF}$)	2.145
Is a statistically significant change ($t_{test} > t`_{0.025,DF}$)?	YES
95% confidence interval (mpg)	0.0544
95% CI as percentage of mean FE change	32.0
Required confidence interval for data quality objective (DQO)	0.12
Meets CI DQO (95% CI < 60% of Delta)?	Yes

The calculated fuel economy change using this method is 0.170 ± 0.0544 mpg. This equates to an approximate 0.94 percent improvement in fuel economy as a result of the use of FEHP lubricant in the test vehicle.

The fuel economy changes resulting from the two alternative methods presented here concur with the calculated fuel economy and confidence interval presented in Section 2.3. All three methods yield an average fuel economy improvement in the range of 0.94 percent to 0.97 percent.

2.5. GREENHOUSE GAS AND OTHER POLLUTANT EMISSIONS

Greenhouse gas and other pollutant emissions from the test vehicle were measured during use of the reference lubricant and FEHP lubricant. Table 2-12 presents a summary of the individual and mean greenhouse gas and other pollutant emission rates observed for the FTP test cycle. Table 2-13 presents a summary of the individual and mean greenhouse gas and other pollutant emission rates for the HFET test cycle. Pollutant concentrations (CH_4, THC) and emission rates (THC, NMHC) were measured or calculated by the Horiba VETS 9200 system using the equipment, methods, and analyzers described in Sections 1.4.5 and 1.4.6. Methane emission rates are calculated from the THC and NMHC gram per mile emission rates using the following equation:

$$CH_4 = \frac{1}{r_{CH_4}}\left[THC\left(\frac{\rho_{CH_4}}{\rho_{THC}}\right) - NMHC\left(\frac{\rho_{CH_4}}{\rho_{NMHC}}\right)\right] \qquad \text{(Eqn. 15)}$$

where:

CH_4	=	emission rate of methane, g/mi
THC	=	emission rate of total hydrocarbons, g/mi
NMHC	=	emission rate of non-methane hydrocarbons, g/mi
r_{CH4}	=	flame ionization detector (FID) analyzer methane response factor, 1.205 for this test
ρ_{CH4}	=	density of methane,18.89 g/ft^3
ρ_{THC}	=	density of total hydrocarbons, 16.34468 g/ft^3 for this test
ρ_{NMHC}	=	density of non-methane hydrocarbons, 16.3433 g/ft^3 for this test

This equation is derived from the hydrocarbon, methane, and non-methane hydrocarbon emission rate calculations specified in 40 CFR 86.144. The density of total hydrocarbons and non-methane hydrocarbons was calculated based on fuel properties for the test fuel used in this test procedure. Technicians determined the FID methane response factor for the analyzer for this test period as part of the emissions test procedure.

Emissions are consistent throughout each group of test runs with coefficients of variation below 0.3. A comparison of mean emission rates for the FEHP and reference lubricants indicates a reduction in CO_2 emissions during the FEHP runs when compared to the reference lubricant runs for both the FTP and HFET cycles. This is expected as a result of the improvement in fuel economy attributed to the use of the FEHP lubricant.

Table 2-12: Greenhouse Gas and Other Pollutant Emissions – FTP						
	THC	**CO**	**NO_x**	**CO_2**	**NMHC**	**CH_4**
Test Run ID	g/mi	g/mi	g/mi	g/mi	g/mi	g/mi
Reference Lubricant-Initial						
Base-1	0.103	0.982	0.034	581.996	0.088	0.014
Base-2	0.113	0.981	0.039	585.615	0.099	0.013
Base-4	0.099	0.939	0.034	585.939	0.085	0.013
Base-6	0.108	0.939	0.034	582.750	0.093	0.014
Base-7	0.103	0.919	0.036	584.659	0.089	0.013
Mean	*0.105*	*0.952*	*0.035*	*584.192*	*0.091*	*0.014*
SD	*0.005*	*0.028*	*0.002*	*1.746*	*0.005*	*0.001*
COV	*0.051*	*0.030*	*0.062*	*0.003*	*0.060*	*0.038*
FEHP						
FEHP-1	0.102	0.911	0.037	575.606	0.088	0.013
FEHP-2-R2	0.103	0.925	0.032	575.518	0.088	0.014
FEHP-3	0.102	0.884	0.031	574.004	0.088	0.013
FEHP-4	0.105	1.019	0.040	577.401	0.091	0.013
FEHP-5	0.110	0.974	0.034	576.096	0.096	0.013
FEHP-6	0.113	1.072	0.036	576.935	0.098	0.014
Mean	*0.106*	*0.964*	*0.035*	*575.927*	*0.092*	*0.014*
SD	*0.005*	*0.071*	*0.003*	*1.199*	*0.004*	*0.000*
COV	*0.044*	*0.074*	*0.096*	*0.002*	*0.049*	*0.036*
Reference Lubricant-Final						
Post Base-1R2	0.112	1.064	0.037	579.196	0.096	0.015
Post Base-2	0.111	0.893	0.033	582.510	0.097	0.013
Post Base-3	0.108	0.977	0.037	580.764	0.092	0.015
Post Base-4	0.105	0.936	0.036	579.183	0.090	0.014
Post Base-5	0.118	1.068	0.035	578.733	0.103	0.014
Post Base-6	0.109	1.001	0.035	580.048	0.094	0.014
Mean	*0.111*	*0.990*	*0.036*	*580.072*	*0.095*	*0.015*
SD	*0.004*	*0.070*	*0.002*	*1.398*	*0.005*	*0.001*
COV	*0.040*	*0.070*	*0.043*	*0.002*	*0.048*	*0.050*

Table 2-13: Greenhouse Gas and Other Pollutant Emissions – HFET						
	THC	**CO**	**NO_x**	**CO_2**	**NMHC**	**CH_4**
Test Run ID	g/mi	g/mi	g/mi	g/mi	g/mi	g/mi
Reference Lubricant-Initial						
Base-1	0.022	0.107	0.007	380.053	0.015	0.007
Base-2	0.020	0.143	0.007	379.006	0.013	0.007
Base-4	0.028	0.206	0.008	379.772	0.020	0.008
Base-6	0.026	0.154	0.007	380.002	0.018	0.008
Base-7	0.017	0.117	0.007	382.838	0.011	0.006
Mean	*0.023*	*0.145*	*0.007*	*380.334*	*0.015*	*0.007*
SD	*0.004*	*0.039*	*0.000*	*1.461*	*0.004*	*0.001*
COV	*0.197*	*0.267*	*0.062*	*0.004*	*0.237*	*0.116*
FEHP						
FEHP-1	0.021	0.143	0.008	375.861	0.014	0.007
FEHP-2-R2	0.028	0.184	0.008	375.870	0.020	0.008
FEHP-3	0.028	0.171	0.007	377.078	0.019	0.009
FEHP-4	0.023	0.145	0.007	375.724	0.015	0.008
FEHP-5	0.022	0.157	0.007	375.634	0.015	0.007
FEHP-6	0.027	0.181	0.010	377.755	0.018	0.009
Mean	*0.025*	*0.164*	*0.008*	*376.320*	*0.017*	*0.008*
SD	*0.003*	*0.018*	*0.001*	*0.880*	*0.002*	*0.001*
COV	*0.128*	*0.109*	*0.149*	*0.002*	*0.148*	*0.112*
Reference Lubricant-Final						
Post Base-1R2	0.024	0.167	0.006	374.912	0.016	0.008
Post Base-2	0.025	0.169	0.007	376.973	0.017	0.008
Post Base-3	0.021	0.129	0.007	377.152	0.013	0.008
Post Base-4	0.026	0.157	0.008	377.529	0.018	0.008
Post Base-5	0.030	0.220	0.010	380.536	0.020	0.010
Post Base-6	0.025	0.164	0.009	381.549	0.016	0.009
Mean	*0.025*	*0.168*	*0.008*	*378.109*	*0.017*	*0.008*
SD	*0.003*	*0.030*	*0.001*	*2.469*	*0.002*	*0.001*
COV	*0.116*	*0.176*	*0.188*	*0.007*	*0.140*	*0.098*

3.0 DATA QUALITY ASSESSMENT

3.1. DATA QUALITY OBJECTIVES

The GHG Center selects methods and instruments for all verifications to ensure a stated level of data quality in the final results. The GHG Center specifies data quality objectives (DQOs) for each verification parameter before testing commences. Each test measurement that contributes to the determination of a verification parameter has stated data quality indicators (DQIs) which, if met, ensure achievement of that verification parameter's DQO.

The establishment of DQOs begins with the determination of the desired level of confidence in the verification parameters. The next step is to identify all measured values which affect the verification parameter and determine the levels of error which can be tolerated. The DQIs, most often stated in terms of measurement accuracy, precision, and completeness, are used to determine if the stated DQOs are satisfied. This verification's DQO is the fuel economy change's desired confidence level. The DQO statement for this verification is:

> *The 95-percent confidence interval of the fuel economy change (Δ) will be less than 60 percent of the mean Δ for Δ values as low as 0.2 mpg. For mean values of Δ less than 0.2 mpg, the confidence interval will be less than or equal to $\pm$ 0.12 mpg.*

Table 3-1 summarizes the data quality objective, DQO goal, and results achieved for the valid test runs.

Table 3-1: Fuel Economy Change And Data Quality Objective

Mean Fuel Economy Change	0.169 mpg
95% Confidence Interval	0.0410 mpg
DQO Confidence Interval	0.12 mpg
Meets DQO Goal?	yes

Each testing, sampling, and analytical method produces results that contribute to the overall fuel economy change determination. The GHG Center concludes that the data and the resulting confidence interval calculation are valid if each contributing measurement conforms to the applicable method specifications. These quantitative or qualitative protocols constitute this verification's DQI goals. The DQIs, goals, and achieved results are summarized and discussed in the following sections. Achievement of the DQI goals implies that the contributing measurement conforms to the applicable method specifications and its use in calculating the achieved DQO is valid. The field team leader also used several QA/QC checks to verify that test conditions were appropriate prior to and after testing, minimizing the number of potential invalid test runs. SwRI made some adjustments to test equipment to ensure data quality because of the QA/QC checks.

The following DQIs contain accuracy, precision, and completeness levels that must be achieved to ensure that DQOs can be met. Reconciliation of DQIs is conducted by: (1) performing independent performance checks in the field with certified reference materials; (2) following approved reference methods; (3) performing factory calibration of instruments prior to use; and (4) conducting QA/QC procedures in the field to ensure that instrument installation and operation are verified. The Test Plan stated that in some instances, reconciliation of DQIs was performed by completion of specific QA/QC checks that infer

proper functioning of equipment. Achievement of such QA/QC checks for these DQIs, in conjunction with original equipment installation calibrations or certifications, indicated that DQI goals were met at the time of testing.

The field team leader voided test runs that did not meet the QA/QC checks or DQIs specified in the test plan. He also addressed DQI failure by requiring test runs to be repeated the next available test day. Some data quality indicator goals were not met during the test period. However, failure to meet these data quality goals did not adversely impact the achievement of the specified data quality objective because supporting data QA/QC goals were met.

3.2. RECONCILIATION OF DQOs AND DQIs

The following sections discuss and summarize the range of measurements observed in the field and the DQI and completeness goals. The GHG Center completed the majority of tasks specified in the test plan for DQI measurements and determinations for all valid test runs used in data analysis. Therefore, the completeness for the majority of these DQI and QA/QC checks is 100 percent. SwRI did not complete the specified tasks for two DQI checks according to the schedule specified in the Test Plan. This is discussed in the following sections. The following sections also include accuracy goals for measurement instruments. Actual measurement accuracy achieved is reported for each item based on instrument calibrations conducted by manufacturers, field calibrations, reasonableness checks, and/or independent performance checks with a second instrument. The QA/QC procedures conducted for key measurements and the procedures used to establish DQIs are also included. The accuracy results for each measurement and their effects on the DQIs are discussed. Accuracy goals were met for the majority of QA/QC checks. Some accuracy checks were not met in certain instances.

3.2.1. Dynamometer Specifications, Calibrations, and QA/QC Checks

Table 3-2 summarizes the dynamometer specifications and the associated data quality indicator goals. The field team leader verified all DQIs during the test period and completed daily QA/QC checks that were used to assure that DQI goals were met for the dynamometer. The field team leader also used the QA/QC checks to ensure that test conditions were within the specified parameters to minimize the number of invalid test runs.

The field team leader verified the dynamometer specifications and DQI goals by reviewing: (1) the original installation calibration data, (2) updated load simulation calibration data, and (3) additional daily QA/QC checks. SwRI indicated that the dynamometer was capable of 0-120 mph speed measurements and 0-1750 lbf load measurements with accuracy of ±0.02 percent full-scale for speed and ±0.1 percent full-scale for load. Review of the original installation data for the dynamometer enabled the field team leader to determine that the accuracy of the system as installed was within the allowable error.

Table 3-2. Chassis Dynamometer Specifications and DQI Goals

					Data Quality Indicator Goals			
Measurement Variable	Date Completed	Instrument Type / Manufacturer	Instrument Range	Measurement Frequency	Accuracy Goal	Accuracy Actual	How Verified / Determined	Complete-ness
Speed	12-15-95	Horiba LDV-48-86-125HP-AC Light-Duty Chassis Dynamometer	0 to 120 mph	10 Hz (10/sec)	± 0.02% FS	Max. Error = -0.0016% FS	Sensors calibrated and verified during original installation. Calibration records reviewed.	100%
Load	3-19-03		0 to 1,750 lbf		± 0.1% FS	Max. Error = -0.1%		100%

The results of the data quality QA/QC checks for the valid test runs are presented in Table 3-3. The field team leader recorded results of all QA/QC checks. Documentation is on file at the GHG Center.

Table 3-3. Chassis Dynamometer QA/QC Checks

QA/QC Check	How Verified / Determined	Date Completed	Goal	Actual Results	Source	Complete-ness
Road load horsepower calibration	Triplicate coastdown checks completed during testing for each lubricant	4/1/03; 4/24/03; 5/20/03	± 1.5 lbf of target	±0.73 lbf (Ref. Lube) ±0.24 lbf (FEHP)	Coastdown Run Data Sheets	100%
Dyno calibration certificate inspection	Once during the test campaign	4/2/03	Sensor accuracies conform to specifications	See Table 3-2	Dyno Calibration Records	100%
Parasitic friction verification	Daily, prior to testing	Each test	±2 lbf from existing settings	Maximum change ±2 lbf*	Daily Parasitic Loss Check Records	100%
Dyno warmup verification	Before each test run	Each test	≥15 minutes of operation; at least 50 mph within 2 hours of the start of testing	Daily dyno warmup time minimum 15:29 at 50 mph	Dyno Warmup Records	100%
Roadload and inertia simulation check	End of each test run	Each test	± 0.3% average over the entire driving sequence	Max. simulation error 0.17%	Dyno Test Run Record	100%
Valid driver's trace	End of each test run	Each test	No deviation from tolerances given in 40 CFR 86.115	None**	Dyno Test Run Record	100%

*A new parasitic loss curve was accepted before run Base-4 due to verifications exceeding ± 2 lbf.
** Test run Base-5 was voided due to an invalid driver's trace.

There were two instances when the dynamometer or test simulation did not meet the QA/QC checks. The first occurred prior to test run Base-4 when SwRI checked the parasitic friction losses of the dynamometer. Friction loss results were out of range of the specifications. Technicians accepted a new parasitic friction loss curve to meet the specifications. All tests completed prior to and after the acceptance of the new parasitic loss curve met the data QA/QC requirements. The second occurred during test run Base-5 when the test driver deviated from the required driving cycle for 2.0 seconds, exceeding the tolerances specified in the test plan. Therefore, the field team leader voided test run Base-5. Test run Base-5R2 was completed in its place the next testing day.

The remaining valid test runs met all required dynamometer QA/QC checks, indicating that DQI goals for the chassis dynamometer were achieved and completeness for valid test runs was 100 percent.

3.2.2. CVS Sampling System Specifications, Calibrations, and QA/QC Checks

Table 3-4 summarizes the Horiba CVS system specifications and DQI goals. The field team leader reviewed the calibration records for the initial installation of the CVS system to verify that the CVS system met the specified DQI goals. This included pressure, temperature, and flow measurement devices. The actual accuracy of the equipment is summarized in Table 3-4. All CVS instrumentation met DQI goals based on a review of available calibration data.

Table 3-4. CVS Specifications and DQI Goals

					Data Quality Indicator Goals			
Measurement Variable	**Date DQI Check Completed**	**Instrument Description**	**Range**	**Measurement Frequency**	**Accuracy Goal**	**Accuracy Actual**	**Complete -ness**	**How Verified / Determined**
Pressure	11/94	Horiba Variable-Flow Constant Volume Sampler	0 to 1500 millibar	10/sec	± 2% reading	Max. Error = 2% of reading	100%	Sensors calibrated and verified during installation.
Temperature	8/94		0 to 100°C		± 2% reading	Max Error = 0.1% of reading		
Volumetric Flow Rate	1/17/95; 11/7/94		0 to 700 ft^3/min		± 0.5% reading	± 0.5% reading		

Daily QA/QC checks were required to ensure continued proper CVS function although initial installation records indicate acceptable functioning of the pressure, temperature, and flow measurement equipment. The CVS measurement variables achieved the specified DQI accuracy during the test period if the daily QA/QC checks conformed to specifications. The field team leader and SwRI technicians performed the daily QA/QC checks of the CVS system as specified. Results of the checks are summarized in Table 3-5. The CVS system and associated equipment met all daily QA/QC check requirements during the entire test period. The sample bag leak check is an automated procedure that was completed by the Horiba VETS 9200 system prior to each test. The specifications of the automated leak check met the QA/QC check requirements. It was not necessary to change the propane cylinder during testing. Therefore, technicians did not need to complete the new propane tank verification check. The field team leader completed a log form for all CVS system QA/QC checks. Copies of the QA/QC log are on file with the GHG Center.

Table 3-5. CVS System QA/QC Checks

QA/QC Check	Date(s) Performed (Required Frequency)	Expected or Allowable Result	Actual Result	How Verified
New propane tank composition verification	NA (prior to placing new propane tank in service)	< 0.35% difference in reading from previously verified tank	NA – not changed during testing	NA – not required
CVS and propane critical flow orifice calibration certificate inspection	4/2/03 (once during the test campaign)	Sensor accuracies conform to specifications	see Table 3-4	Review of initial calibration certificates
Propane injection check	3/28/03; 4/3/03; 4/10/03; 4/14/03; 4/23/03; 4/30/03; 5/14/03; 5/20/03; 5/28/03 (weekly)	Difference between injected and recovered propane ≤ ± 2.0%.	max error = -1.96%	Review of weekly Propane Injection Check records
Flow rate verification	Each test (before each test run)	± 5 cfm of appropriate nominal set point	all test runs pass	Review of daily test log forms and intermittent visual verification
Sample bag leak check	Each test (before each test run)	Maintain 10" Hg vacuum for 10 seconds	all test runs pass	Review of daily test output and log forms

3.2.3. Emission Analyzer Specifications, Calibrations, and QA/QC Checks

Table 3-6 lists the emission analyzers used during the test campaign, the expected values, and associated DQI goals. SwRI technicians calibrate the emission analyzers monthly using calibrated gas dividers and calibration gases verified against NIST-traceable reference gases. Technicians calibrate analyzers at 11 calibration points throughout the range of the analyzer in accordance with SwRI standard operating procedures. Technicians accept a revised calibration curve for the emission analyzers if calibration checks indicate error exceeding the accuracy goals. The field team leader reviewed all analyzer calibrations for the expected range of operation of the analyzers prior to commencement of testing to ensure analyzers would meet the specifications during the test period. SwRI also completed several analyzer calibrations during the test period. The CO analyzer with the 0-3000 ppm range originally identified in Table 3-5 of the Test Plan was not used during the test period because the higher range limit was not needed. Therefore, calibration data was not obtained for this CO analyzer range. The field team leader reviewed the calibration results during testing to ensure QA/QC goals would be met. The maximum actual calibration error for each analyzer is summarized in Table 3-6.

Table 3-7 summarizes the applicable QA/QC checks for the emission analyzers, calibration gases, and associated equipment. Since calibrating analyzers prior to each test would be cumbersome and time-consuming, the test plan specified that if all calibration gases and QA/QC checks met their specifications, SwRI and the GHG Center would infer that the emission analyzers met Table 3-7 accuracy specifications. The LLCO (200 ppm) and CO_2 (4 percent) accuracies observed during the analyzer calibration checks exceeded the accuracy specification of one percent of full scale for two data points each. The CO_2 (4 percent) analyzer also exceeded the one percent of reading for one point and two percent of full scale for two points for the May 2003 calibrations. SWRI performs an 11-point calibration on the analyzers, although 40 CFR 86.122 and .124 only require an 8-point calibration. SwRI sometimes observes one or two points out of acceptable range on a specific analyzer. Technicians then use their judgment to evaluate whether or not the analyzer should be recalibrated so the analyzer will still meet the 8-point calibration requirement. SwRI did not recalibrate the analyzers in these two cases because the remainder of calibration data points met the allowable error requirements. The CO_2 analyzer was also not recalibrated to allow for the direct comparison between the calibration curves for the incorrectly input calibration gas value and the replacement calibration gas. This allowed analysts to develop a correction factor as

discussed below. Completeness for these DQI goals is calculated as the percentage of valid data points for a given set of calibration data for each analyzer.

Table 3-6. Emission Analyzer Specifications and DQI Goals

					Data Quality Indicator Goals			
					Accuracy[a]			
Measure-ment Variable	Operating Range During Tests	Instrument Mfg., Model / Type	Date Completed	Measurement Frequency	Goal	Maximum Actual	How Verified / Determined	Complete-ness
Low CO	0 – 200 ppm	Horiba AIA-210 / NDIR	3/6/03; 4/8/03; 5/5/03	1 analysis per bag, 8 bags (4 dilute exhaust, 4 ambient air) per run. 45-second purge period, then 10-second analysis period per bag. Analyzer output to VETS @ 10/sec	± 1.0% FS or ± 2.0% of the calibration point	1.81% reading; 1.07% FS	Gas divider with protocol calibration gases at 11 points evenly spaced throughout span (including zero)	95.5%
CO_2	0 – 4.0% (vol)	Horiba AIA-220 / NDIR	3/6/03; 4/8/03; 5/6/03			2.10% reading; 2.10% FS		92.4%
NO_X	0 – 10 ppm	Horiba CLA-220 / Chemiluminescence	3/6/03; 4/8/03; 5/5/03			1.85% reading; 0.32% FS		100%
THC	0 – 30 ppm (carbon)	Horiba FIA-220 / HFID	3/5/03; 4/8/03; 5/5/03			1.23% reading; 0.74% FS		100%

[a]The most stringent accuracy specification applies for each calibration point.

SwRI verifies all new Standard Reference Material (SRM) or other calibration and reference gas concentrations with an emissions analyzer that has been calibrated within the last 30 days. The operator zeroes the analyzer with a certified zero-grade gas and then spans it with a NIST SRM (or equivalent) three times to ensure stability and minimal analyzer drift. The operator then introduces the new reference gas into the analyzer and records the concentration, followed by reintroduction of the NIST SRM to ensure that the analyzer span point does not drift more than ±0.1 meter divisions. The operator repeats these last two steps until three consistent values are obtained for the NIST SRM and the new candidate reference gas. The mean of the three NIST SRM concentrations must be within one percent of the certified NIST SRM concentration. SwRI then considers the reference gas suitable for emissions analyzer calibrations. SwRI refers to this process as calibration gas "naming." The field team leader reviewed all calibration gas naming records to ensure compliance with the specified protocol and quality standards. All calibration gases met the specified QA/QC standards.

Table 3-7. Emission Analyzer QA/QC Checks

QA/QC Check	Date(s) Performed (Frequency)	Expected or Allowable Result	Actual Result
NIST-traceable calibration gas verifications	CO_2 (4%): 1/15/02; 4/10/03 THC (30 ppm): 2/21/01 CO (25 ppm): 6/25/02 NO_X (10 ppm): 6/25/02 CO (200 ppm): 4/10/03 (prior to being put into service)	Average of three readings must be within ±1% of verified NIST SRM concentration	Maximum Error Observed =0.042% (see discussion)
Zero-gas verification	3/25/03; 4/7/2003; 4/25/2003 (prior to being put into service)	HC < 1 ppmC CO < 1 ppm CO_2 < 400 ppm NO_x < 0.1 ppm O_2 between 18 and 21%	HC = 0 ppmC CO = 0 ppm CO_2 = 0 ppm NO_x = 0 ppm 0_2=21.0-21.64%
Gas divider linearity verification	3/13/03; 5/2/03 (monthly)	All points within ± 2% of linear fit FS within ± 0.5% of known value	± 0.5% of point ± 0.1% FS
Analyzer calibrations	See Table 3-6 (monthly)	All values within ± 2% of point or ± 1% of FS; Zero point within ± 0.2% of FS	See Table 3-6
Wet CO_2 interference check	3/7/03; 4/23/03; 5/6/03 (monthly)	CO-0 to 300 ppm, interference ≤ 3 ppm CO > 300 ppm, interference ≤ 1% FS	Interference ≤ 0.1 ppm Interference ≤ 0.00373%
NO_X analyzer interference check	4/30/03 (monthly)	CO_2 interference ≤ 3%	Interference ≤ 0.32%
NO_X analyzer converter efficiency check	3/7/03; 4/23/03; 5/6/03 (monthly)	NO_x converter efficiency > 95%	Efficiency ≥ 98.95%
CO and CO_2 PEAs	CO_2: 4/24/03; CO: 5/2/03 (once during testing)	± 2% of analyzer span	± 0.42% of span (CO_2) ± 0.25% of span (CO)
Calibration gas certificate inspection	4/3/03 (once during testing)	Certificates must be current; concentrations consistent with cylinder tags	Concentrations match tags & naming sheets. All current.
Bag cart operation	Each Test (prior to analyzing each bag)	Post-test zero or span drift shall not exceed ±2% full-scale	All pass.

The test plan specifies verification of the new calibration gas concentration to within one percent of the NIST-traceable reference gas. However, the standard method SwRI used for gas "naming" requires that repeated analyses of a NIST SRM on the analyzers have an error of less than one percent when compared to the certified NIST concentration. The NIST gas is used as a reference gas to ensure the analyzer accuracy, but is not meant as a direct comparison to the calibration gas. Error reported in Table 3-7 is the maximum error for the NIST SRM gas readings.

SwRI also verifies each new working zero air (or N_2) cylinder's impurities to ensure that it is suitable for emission analyzer zero checks. Comparisons between a certified Vehicle Emission Zero (VEZ) gas (or

equivalent) and the candidate zero gas serve this purpose. SwRI employs an emissions cart (or suite of instruments) that has been calibrated within the last 30 days for this procedure. The operator zeroes the analyzers with certified VEZ gas and spans them with NIST-traceable reference gases to ensure stability and minimal analyzer drift. The operator then introduces the candidate cylinder's zero gas to the sample train and records the THC, CO, CO_2, and NO_x values. The field team leader reviewed zero gas verification records for all zero gases used during the test period. This review showed that the oxygen content of one of the zero gases exceeded the specified criteria. This zero gas cylinder was installed without proper verification so testing could begin on schedule. It was verified during the test period. The pollutant concentrations met the specified criteria and the gases were deemed suitable for instrumental analyzer calibrations although the oxygen concentration exceeded the specified limit.

SwRI uses a gas divider to obtain a range of concentrations from a single reference gas to complete analyzer calibrations across the appropriate instrument range. SwRI verified the calibration gas divider linearity using an HC analyzer known to have a linear response and an HC span gas. The field team leader reviewed the gas divider linearity verification records for the divider used during analyzer calibrations during the test period. The maximum error observed for the gas divider was 0.5 percent of reading or 0.1 percent of full scale, which is within the specifications of the Test Plan.

The NIST-traceable calibration gases, in conjunction with the verified gas divider and zero gas, were used to create individual gas concentrations to verify the calibration of each instrumental analyzer. Eleven gas concentrations were generated in ten-percent increments from 0 to 100 percent of each analyzer's span for calibration verification. The Horiba VETS 9200 records analyzer response at each point and determines associated error. The field team leader reviewed the calibration verification records for each analyzer range used during the test period. The LLCO analyzer calibration completed on April 1 indicated errors in excess of one percent full scale. Therefore, a new calibration curve was accepted for the LLCO 0-200 ppm range on April 1, 2003. The CO_2 analyzer calibration completed on March 6, 2003, indicated an error in excess of one-percent of full scale for the four percent CO_2 range. A calibration was run again after the four percent CO_2 calibration gas was replaced on April 8. The new calibration curve was accepted based on the correct calibration gas concentration. The field team leader did not identify any other calibration errors that were outside of the specified allowable error.

The four-percent CO_2 range calibration gas ran low during the Base 5-R2 test period. Technicians changed the tank immediately after the test, with a new verified calibration gas taking its place. However, SwRI identified a shift in CO_2 analyzer response after replacing the four-percent CO_2 gas. SwRI determined after further review that the concentration of the previously used four-percent CO_2 reference gas was input incorrectly into the Horiba VETS 9200 during analyzer calibrations. Therefore, the Horiba analyzer incorrectly determined the CO_2 concentration calibration curve used for runs Base-1 through Base-5. Previous calibration data for three months prior to testing showed consistent analyzer response for the CO_2 calibration verification. The maximum observed error among three of the calibration curves was 0.885 percent. Technicians performed repeated analyzer calibration verifications after replacement of the four-percent CO_2 gas. The maximum observed error among resultant calibration curves was 0.651 percent.

Comparison of the two sets of calibration curves for the old (incorrect concentration) and new gas bottles allowed analysts to determine that a shift in CO_2 concentration of 2.37 to 2.40 percent occurred as a result of the incorrect calibration gas concentration input for the range of exhaust CO_2 concentrations encountered during testing (0.9070 to 1.1452 percent CO_2). A shift in CO_2 concentration of 2.55 percent was also observed for CO_2 in the range of ambient CO_2 concentrations encountered during testing (0.0394 percent to 0.0449 percent CO_2). SwRI applied a correction factor to the test data equivalent to the average percent offset observed between the correct calibration gas analyzer response and the incorrect

analyzer response to account for the incorrect calibration curve. A Corrective Action Report (CAR #3) for this is on file at the GHG Center.

A sensitivity analysis was completed to demonstrate that the error incurred by using an average value for the offset, as opposed to a specific offset value based on the calibration curves, was minimal. The CO_2 concentrations for one test run (Base-1) were corrected using the maximum, minimum, and average offset correction factors. The resulting differences in fuel economy were calculated. The differences in fuel economy calculated using the average CO_2 correction factor and the maximum and minimum correction factor were 0.017 percent and 0.011 percent. The correction method, supporting documentation, sensitivity analysis, and sample calculations were documented and are on file with SwRI and the GHG center.

The CO analyzer wet CO_2 interference check was completed in conjunction with the monthly calibrations. This procedure determines the CO analyzer's response to water vapor and CO_2. The field team leader reviewed documentation of the CO_2 interference checks completed for the test period. Analyzer response to the interference gas was ≤ 0.1 ppm for spans below 300 ppm and ≤ 0.00373 percent of span for higher ranges. This is well within the allowable error specified in the Test Plan.

The NO_x analyzer CO_2 interference check was not completed monthly as scheduled in the Test Plan. The NO_X analyzer CO_2 interference (quench) check is normally completed once every six months in accordance with SwRI's SOP and was completed in conjunction with one of the monthly calibrations. This does not meet the schedule specified by the Test Plan but it does meet the schedule specified in SwRI's SOP. This check is not required by EPA regulations nor specified in the CFR for light-duty vehicle fuel economy testing. A verified gas divider was used to dilute NIST-traceable CO_2 by 50 percent with NIST-traceable NO. The operator then calculated the expected dilute NO concentration and recorded the analyzer's actual response to this challenge. The difference between the calculated NO and measured NO concentrations was ≤ 0.32 percent.

The field team leader reviewed documentation of NO_X analyzer converter efficiency checks for the test period. The check procedure uses a NO_X generator that dilutes NIST-traceable NO with air. An ozone generator then converts a quantitative portion of the air's oxygen to O_3 that converts the same proportion of NO to NO_2. This creates a NO_X blend (NO plus NO_2) of known concentration. The difference between the analyzer's NO response and NO_X response will be the measure of the NO_X to NO converter efficiency. SwRI determined the NO_X converter efficiency to be > 98.95 percent for the test period. The allowable minimum NO_X converter efficiency is 95 percent.

The field team leader introduced NIST-traceable CO and CO_2 audit gases to the analyzer at the analyzer's external ports as an independent performance evaluation audit (PEA). The audit gas concentrations used were within the analyzer ranges used during testing. The CO_2 audit gas was CO_2 in N_2 gas with a certified concentration of 1.003 percent CO_2 and an accuracy of ±2 percent. The CO audit gas was a 49.9 ppm CO in air mixture with an accuracy of ±5 percent. Analyzer audits yielded analyzer accuracies of 0.42 percent and 0.25 percent, considered acceptable according to the test plan specification of ±2 percent of span. The CO audit gas used for the PEA did not meet the audit gas accuracy specification of ±2 percent indicated in the Test Plan. A CO audit gas with a ±2 percent accuracy specification was not available from gas suppliers in a reasonable time frame or at a reasonable cost necessary to ensure use during the test period. Therefore, the CO audit gas with an accuracy specification of ±5 percent was used.

The field team leader also reviewed certificates for all calibration and zero gases used during the test campaign. All certificates were current and the cylinder tag concentrations matched those on the applicable certificate and the calibration gas naming records. Records of analyzer calibrations and QA/QC checks, as compiled by the field team leader, are on file with the GHG Center.

3.2.4. Ambient Instrument Specifications, Calibrations, and QA/QC Checks

Meteorological parameters collected or calculated during the test period include ambient air temperature, relative humidity, and barometric pressure. These values are used in a variety of calculations. SwRI acquired these data prior to each test with the instruments listed in Table 3-8. The DQI goals for the ambient monitoring instruments are also specified in Table 3-8.

Table 3-8. Ambient Instrument Specifications and DQI Goals

					Data Quality Indicator Goals			
Measurement Variable	**Expected Operating Range**	**Manufacturer**	**Instrument Range**	**Measurement Frequency**	**Accuracy**		**Complete -ness**	**How Verified / Determined**
					Goal	**Actual**		
Wet- and Dry-Bulb Temperature	68 to 86 ºF	Psychro-Dyne	10 to 110 ºF	Prior to each test	±1.0 ºF	± 0.4 ºF	100%	Regular verification checks with NIST-traceable standards
Barometric Pressure	28 to 31" Hg	Heise 901A pressure transducer	20 to 35" Hg		± 0.1" Hg	± 0.004" Hg		

The barometric pressure transducer measures test site pressure directly. Wet-bulb and dry-bulb temperatures are used to estimate relative and absolute humidity. Relative humidity and temperature are also recorded continuously to verify test site conditions. SwRI verified meteorological instrument performance with the QA/QC checks outlined in Table 3-9. The field team leader reviewed records of these QA/QC checks for the testing period.

Table 3-9. Ambient Instrument QA/QC Checks

QA/QC Check	When Performed (Required Frequency)	Expected or Allowable Result	Actual Result
Test site barometer calibration verification	Weekly (Prior to each set of lubricant tests)	±0.1" Hg of NIST-traceable standard	±0.004" Hg of NIST-traceable standard
Wet-bulb and dry-bulb temperature calibration verification	Monthly - 3/31/03; 4/24/03; 5/21/03 (Prior to each set of lubricant tests)	±1.0 ºF of NIST-traceable standard	±0.4 ºF of NIST-traceable standard
Test site dry-bulb temperature verification	Prior to each test run	68 to 86 ºF	71-74 ºF

SwRI maintains separate NIST-traceable primary standard and secondary standard barometers. Operators compare the primary and secondary standards with each other to ensure the primary standard's accuracy. SwRI requires the primary standard to be within ±0.05" Hg of the secondary standard. SwRI also requires the test site barometer readout to be within ±0.1" Hg of the primary standard. The Test Plan incorrectly specified that the test site barometer should be within ±0.01" Hg of the primary standard. A Corrective Action Report (CAR #5) was issued to revise the Test Plan requirement to meet the SwRI SOP. Although not a requirement of SwRI's standard operating procedures, barometer verification data demonstrates that both the existing and revised data quality checks are satisfied.

Verification of the wet-bulb and dry-bulb thermometers occurs monthly. Comparisons with NIST-traceable thermometers (accurate to ±0.1 ºF) ensure that test site temperature measurements are within ±1.0 ºF. The field team leader reviewed thermometer calibrations for the test period and verified that the psychrometer meets the specified accuracy requirement of 1.0 ºF, achieving an accuracy of ±0.4 ºF. 40 CFR 86.130 specifies that test site temperatures must be between 68 and 86 ºF during vehicle testing. Operators monitored temperatures prior to the start of every test run to ensure that this specification is

met. A review of the temperature records indicates that all test runs were completed under appropriate temperature conditions as specified in the test plan.

The field team leader monitored and documented SwRI's QA/QC check performance for ambient monitoring equipment. Documentation of QA/QC checks is on file with the GHG Center.

3.2.5. Test Fuel Specifications

SwRI received certification-grade test fuel in 55-gallon drums to use throughout testing. All drums were obtained from a single batch of gasoline maintained by the supplier. The Test Plan specifies analysis of duplicate samples from each drum of test fuel, but the GHG center felt it unnecessary to analyze each drum because all test fuel was from the same fuel batch. Therefore, SwRI's analytical laboratory completed analysis of two samples from the test fuel batch received by SwRI. Samples were analyzed in accordance with the methods listed in Table 3-10. Table 3-10 also presents the DQI goals, allowable test fuel specifications, analytical results, and accuracy of analyses. The field team leader also summarized test fuel analyses on the required log forms and obtained copies of analytical reports from SwRI. All documentation is on file with the GHG Center. All sample results meet the DQI goals for accuracy and are within the required specifications for the test fuel.

Table 3-10. Test Fuel ASTM Measurement Methods and DQI Goals

Parameter	ASTM Test Method	Sample Results		Required Spec	Method Accuracy	Accuracy Goal (2x Method Accuracy)	Measured Accuracy
Sample ID		**ETV1**	**ETV2**				
Octane – Research	D2699	96.7	96.6	> 93	±0.32	±0.64	±0.1
Octane – Motor	D2700	88.9	88.8	NA	NA	NA	NA
Sensitivity (Octane)	D2699, D2700	7.8	7.8	> 7.5	NA	NA	NA
Lead (g/gal)	D3237	<0.001	<0.001	<0.05	±0.0004	±0.0008	NA
Distillation Range	D86						
Initial		93.3 °F	94.9 °F	75-95 °F	±2.54 °F	±5.08 °F	±1.6
10%		128.5 °F	129.6 °F	120-135 °F	±2.36 °F	±4.72 °F	±1.1
50%		219.5 °F	220.6 °F	200-230 °F	±1.96 °F	±3.92 °F	±1.1
90%		319.6 °F	321.4 °F	300-325 °F	±1.57 °F	±3.14 °F	±1.8
End		406.8 °F	404.9 °F	415 °F	±5.11 °F	±10.22 °F	±1.9
Sulfur (wt%)	D1266	0.0033	0.0032	<0.1	±0.00042	±0.00084	±0.0001
Phosphorus (g/gal)	D3231	0.0001	<0.0001	<0.005	±0.0007	±0.0014	NA
Reid Vapor Pressure (psia)	D5191	9.15	9.11	8.0 - 9.2	±0.07	±0.14	±0.04
Hydrocarbons(wt%)	D1319						
Olefins		0.8	0.9	<10	±0.64	±1.28	±0.1
Aromatics		30.4	30	<35	±0.54	±1.08	±0.4
Saturates		68.8	69.1	-	±0.59	±1.18	±0.3
Hydrocarbons Duplicate	D1319						
Olefins		1	0.8	<10	±0.64	±1.28	±0.2
Aromatics		30.9	31.2	<35	±0.54	±1.08	±0.3
Saturates		68.1	68	-	±0.59	±1.18	±0.1
Specific Gravity	D1298	0.7423	0.7424	-	±0.5	±1	±1E-04

3.2.6. Fuel Economy Volumetric and Gravimetric Cross-Checks

SwRI and the GHG Center performed cross-checks of the carbon balance method fuel economy results with separate volumetric and gravimetric fuel economy determinations. An external fuel cart provided fuel for the vehicle from a five-gallon fuel container during each test run. The fuel cart used a flow meter to monitor volumetric fuel flow to the vehicle and return fuel. The fuel container was placed on a Fairbanks scale to monitor weight of fuel consumed during each test phase. Fuel economy was then calculated from both the volumetric and gravimetric fuel consumption data and vehicle miles traveled during the test phase for comparison to the carbon balance fuel economy result. SwRI technicians calibrated the fuel cart prior to beginning the test period to ensure proper fuel cart function. The error in volumetric fuel cart readings during calibration averaged 0.27 percent, with a maximum of 0.36 percent. The acceptable error specified by SwRI's SOP is ±2%.

The Test Plan for this verification specified a ±0.3 difference in COVs for each fuel economy calculation method as an indicator of potential data bias for the carbon balance calculation method. Observed fuel economy differences of greater than 0.2 mpg were also to be investigated for evidence of bias. Volumetric and gravimetric cross-checks were completed for each test run instead of the maximum of 10 test runs specified in the Test Plan. The field team leader and SwRI project manager reviewed the volumetric and gravimetric cross-check data after each test run. Tables 3-11, 3-12, and 3-13 summarize the volumetric and gravimetric cross-check results for all test runs.

Table 3-11: Volumetric and Gravimetric Cross-Checks – FEHP Lubricant Test Runs

Run ID	Date	Carbon Balance mpg	Gravimetric mpg	COV Difference	Mean mpg Difference
FEHP 1	4/23/03	18.272	18.77		
FEHP 2R2	4/25/03	18.272	18.72		
FEHP 3	4/29/03	18.284	18.74	0.096	0.467
FEHP 4	4/30/03	18.233	18.69	0.058	0.465
FEHP 5	5/1/03	18.263	18.6	0.242	0.449
FEHP 6	5/2/03	18.206	18.69	0.151	0.447
Run ID	**Date**	**Carbon Balance mpg**	**Volumetric mpg**	**COV Difference**	**Mean mpg Difference**
FEHP 1	4/23/03	18.272	18.46		
FEHP 2R2	4/25/03	18.272	18.42		
FEHP 3	4/29/03	18.284	18.50	0.179	0.184
FEHP 4	4/30/03	18.233	18.40	0.119	0.180
FEHP 5	5/1/03	18.263	18.32	0.206	0.165
FEHP 6	5/2/03	18.206	18.39	0.336	0.160

Table 3-12: Volumetric and Gravimetric Cross-Checks – Initial Reference Lubricant Test Runs					
Run ID	**Date**	**Carbon Balance mpg**	**Gravimetric mpg**	**COV Difference**	**Mean mpg Difference**
Base 1	4/2/2003	18.070	18.624		
Base 2	4/3/2003	18.013	18.487		
Base 4	4/8/2003	17.994	18.389	0.419	0.474
Base 6	4/11/2003	18.055	18.478	0.328	0.462
Base 7	4/12/2003	17.973	18.403	0.279	0.455
Run ID	**Date**	**Carbon Balance mpg**	**Volumetric mpg**	**COV Difference**	**Mean mpg Difference**
Base 1	4/2/2003	18.070	18.280		
Base 2	4/3/2003	18.013	18.202		
Base 4	4/8/2003	17.994	18.108	0.254	0.171
Base 6	4/11/2003	18.055	18.247	0.213	0.176
Base 7	4/12/2003	17.973	18.206	0.129	0.188

Table 3-13: Volumetric and Gravimetric Cross-Checks – Post FEHP Reference Lubricant Test Runs					
Run ID	**Date**	**Carbon Balance mpg**	**Gravimetric mpg**	**COV Difference**	**Mean mpg Difference**
Post Base1R2	5/23/03	18.208	18.601		
Post Base 2	5/24/03	18.111	18.649		
Post Base 3	5/28/03	18.143	18.712	0.025	0.500
Post Base 4	5/29/03	18.169	18.690	0.034	0.505
Post Base 5	5/30/03	18.121	18.629	0.024	0.506
Post Base 6	5/31/03	18.082	18.673	-0.029	0.520
Run ID	**Date**	**Carbon Balance mpg**	**Volumetric mpg**	**COV Difference**	**Mean mpg Difference**
Post Base1R2	5/23/03	18.208	18.328		
Post Base 2	5/24/03	18.111	18.336		
Post Base 3	5/28/03	18.143	18.449	0.094	0.217
Post Base 4	5/29/03	18.169	18.375	0.073	0.214
Post Base 5	5/30/03	18.121	18.375	0.044	0.222
Post Base 6	5/31/03	18.082	18.350	-0.010	0.230

Tables 3-11, 3-12, and 3-13 indicate that the COV difference for the cross-checks was typically less than 0.3. The field team leader and SwRI project manager reviewed test run data to determine if any bias or error may have been introduced for those instances where the COVs differed by greater than 0.3. No bias or error was identified in these tests. Continued cross-checks indicated that the ratio of volumetric or gravimetric fuel economy to the carbon balance fuel economy remained consistent throughout the test runs. Differences in mean fuel economy followed the same trend for each set of cross-checks. Test personnel observed a difference greater than 0.2 mpg (0.447 - 0.520 mpg) between the carbon balance

and gravimetric cross-checks, but the difference remained stable throughout the test runs. This indicated that the gravimetric method consistently overestimated the fuel economy and did not warrant further investigation. The volumetric method also consistently overestimated the fuel economy when compared to the carbon balance method by 0.160 to 0.230 mpg. The ratio of volumetric to carbon balance fuel economy was consistent throughout the test period. Therefore, no further investigation was warranted.

4.0 TECHNICAL AND PERFORMANCE DATA SUPPLIED BY CONOCOPHILLIPS

The following data is supplied by ConocoPhillips for informational purposes only. The data has not been verified by the GHG Center.

ConocoPhillips and Visteon state that FEHP provides excellent fuel economy, extreme pressure lubrication, and antiwear protection under severe service. The FEHP development process included extensive bench, dynamometer, and vehicle tests. In addition, developers used proprietary axle efficiency and spin-loss tests to evaluate frictional losses and to optimize axle efficiency while maintaining low temperatures. ConocoPhillips' controlled test results found FEHP lubricant properties to be better than synthetic reference fluids under most conditions. Subsequent fuel economy testing by the Ford Research Laboratory (FRL) confirmed this by showing a 1.5-percent increase in fuel economy over the reference lubricant normally installed in light truck rear axles. These tests were completed using 1999 Lincoln Navigators.

The FEHP's unique fluid properties include high lubricant film strength under heavy loads and high temperatures. This is said to provide excellent component surface protection. FEHP minimizes frictional drag at low temperatures with a characteristic viscosity of 90,000 cP at –40°C. These fluid properties allow the FEHP 75W90 lubricant to be used in lieu of 75W140 standard axle lubricants

Projects to certify the FEHP for use in limited slip differentials have been completed successfully. The FEHP is in use in current production vehicles.

This page intentionally left blank

5.0 REFERENCES

1. Inventory of Greenhouse Gas Emissions and Sinks. US Environmental Protection Agency. Washington, DC. April, 2003.

2. Correspondence from Paul Schwarz (Visteon) re: Visteon Beam vs. Independent Rear Suspension Vehicle Volume. March 20, 2003.

3. 40 CFR Part 86, Control of Emissions from New and In-Use Highway Vehicles and Engines. U.S. Environmental Protection Agency Code of Federal Regulations. Washington, DC. Feb. 18, 2000.

4. 40 CFR Part 600, Fuel Economy of Motor Vehicles. U.S. Environmental Protection Agency Code of Federal Regulations. Washington, DC. Aug. 3, 1994.

5. Statistics Concepts and Applications. D.R Anderson, D.J. Sweeney, and T.A. Williams. West Publishing Company. St. Paul, MN. 1986.

6. A Modern Approach to Statistics. R.L. Iman and W.J. Conover. John Wiley & Sons. New York, NY. 1983.

7. Proposed A-, B-, C-, Coefficient Estimation Procedure, including Appendix A -- Calculated Dynamometer Coefficients (W. Mears, April 24, 1995). Personal communication from Gerald A. Esper, American Automobile Manufacturer's Association, to Phil Lorang of the U.S. EPA and K.D. Drachand of the California Air Resources Board. Detroit, MI. September 28, 1995.

8. Standard Practice for Dealing with Outlying Observations, ASTM Standard E178-02. ASTM International. West Conshohocken, PA. 2002.

SwRI Standard Operating Procedures

SOPs #		Revision date:
06-002	NO_X converter efficiency determination	01-13-1998
06-003	Linearity verification of gas dividers	01-19-1998
06-007	Naming monthly calibration gas	10-16-1997
06-010	Barometric pressure verification	04-10-2000
06-011	Propane recovery check	01-22-1999
06-013	Temperature calibration and verification	06-17-1996
06-014	CVS tunnel stratification check	11-03-1995
06-016	Wet CO_2 interference check for CO analyzers	09-09-1996
06-021	FID response for methane	10-20-1995
06-023	Calibration of analyzers using digital readout	03-04-1999
06-036	Verification of zero gases	08-11-1997
06-041	NO_X analyzer CO_2 quench check	04-05-1999
06-042	Verification of SRM or NIST-traceable gases	06-25-1998

06-043	Verification of pure propane gas	06-02-1999
06-044	Hydrocarbon analyzer optimization	04-04-2002
06-048	48" dyno coastdown procedure	01-23-2002
06-049	Load cell calibration check	03-23-2001
07-013	Light-duty FTP	08-07-1998
07-027	Light-duty HFET	11-16-1995
08-004	Verification of driver's trace	02-14-1996
12-001	Quality system and process audits	02-16-2001

APPENDIX A

Engine Oil and Axle Lubricant Change Procedures and Records

Appendix A-3
Rear-Axle Lubricant Change Procedure and Observations

Notes:
Ford Research Laboratory has developed this procedure to yield the most consistent possible run - to - run test results and submitted it for use in this Test Plan.
The same technician will perform all rear axle lubricant changes.
Change engine lubricant and filter at the same time.

1. Remove the axle cover and drain plug; allow the lubricant to drain.

2. Remove rear wheels and brakes and soak up any lubricant in the axle tube (for solid beam axles) with a wick mounted on a cleaning rod or wire.

3. Wipe off the remaining lubricant as much as possible from ring, pinion, and carrier gear surfaces, and from inside the housing surface with a clean rag.

4. Use NAPA "MAX-4800," Brake Clean "Brake-091314" (or equivalent) brake cleaner solvent. Spray brake cleaner inside the axle tube and on a clean wick. Use the wick to clean the remaining oil from the axle shafts and tubes. Repeat with clean wicks and more solvent until they are as clean as is possible.

5. Spray the brake cleaner solvent on all gear surfaces and the inside surface of the housing to remove any residual oil. Repeat several times to remove all oil traces. The brake cleaner will evaporate, and requires no further cleanup. All surfaces should look dry.

6. Reinstall the brakes, wheel, axle cover, and drain plug.

7. Remove the fill plug. Fill the housing with the required lubricant volume as indicated in the Owner's Manual. For consistency, use a calibrated volumetric measuring dispenser. DO NOT follow the normal practice of filling the housing until oil escapes from the oil fill plug opening.

8. Replace the fill plug and prepare the vehicle for the 1000 mile mileage accumulation dynamometer runs.

Observer Notes

Date: 3-27-03 Signature: [illegible]

VIN: 1FTRW07L23KA13861 Odometer miles: 14950 Technician Name: Al

Axle Lubricant: (Reference Oil/FEHP) Ref. Oil Volume Added: 5.5 pints

Engine oil changed? (Y/N) Y Technician Name: Phil W

Note whether or not the technician follows all steps outlined above. Enter additional notes below.

Notes:
See attached SwRI Axle Prep Work order. All tasks were completed. Interior of axle tube could not be swabbed, as it resulted in removal of bearing spring. Axle tubes were thoroughly sprayed with brake cleaner and solvent and oil removed w compressed air. Repeated until clean. Gears + axles were also inspected, photographed and rated. Axle cover seal was allowed to cure overnight prior to filling with lubricant.

Ford F-150 Axle Prep Workorder

Date: 3-27-03 Technician: CJ

Perform in steps shown:

1. Clean the loose dirt from the outside of the axle.
2. Remove rear cover and measure volume of oil that comes out. Save drain oil.
3. Check the axle ratio by turning or counting teeth (39) (should be 3.55:1)
4. Pull both axle shafts out (mark them left and right).
5. Swab out axle tubes with wick on rod or wire.
6. Wipe off oil on ring, pinion, carrier and from inside the housing with rag
7. Use appropriate "Brake Wash" and spray inside axle tubes and on a clea wick. Use wick to clean remaining oil from the axle shafts and tubes. Repeat until as clean as possible.
8. Use appropriate "Brake Wash" and spray on all gear surfaces and inside axle housing to remove residual oil. Repeat until as clean as possible.
9. Record the following (Circle One):

   Any water in oil/ axle? Y / N

   Any debris in housing (save them)? Y / N

10. Rate the following and record seperately:

    Rust.

    Deposits (Note if hard or soft)

    Distress on Pinion and Ring Gear

    Shaft Seals and Bearings

Eng. Family No. 3FMXT05.4PFB

FAS 11. Video bore scope all the ring and pinion teeth and housing inside condition.

FAS 12. Obtain digital photos of some teeth on ring and pinion.

FAS 13. Video the condition of all exposed shaft seals and bearings. (but do not remove carrier or pinion!)

14. Record break and turn measurements with the axle shafts out (compare to service manual).

Measured Break and Turn: 2 FT. LB'S.

Specified Break and Turn: _____

15. Record backlash measurement (compare to service manual).

YELLOW, .010 .010 .009 .007

Measured Backlash: .012

Specified ~~Break and Turn~~ Backlash JKg: 0.12 to 0.15

16. Swab all oil from the axle tubes and follow appendix cleaning procedure.

17. Does axle show any post factory modification/ repair (Circle One)? Y / N

18. Reinstall axle shafts on same sides they were removed from.

19. Reinstall rear cover using appropriate product (check with Albert Olveda). Be sure to let it cure for at least 4 hours prior to adding oil!

20. Measure 5.5 pints of appropriate oil and charge. Verify ~~level~~ JKg that level should be 3/8 to 1/2 inch below fill hole.

21. Do not add a friction modifier additive!

Kevin Brunner 3/27/03

Spider pin bolt torqued to 22 ft lbs
Cover bolts torqued to 33 ft lbs

22. LEAVE PARKING BRAKE SHOE ADJUSTERS IN "BACKED OFF" POSITION. Tape Emergency brake to prevent use.

SRI ETV
08.06269.01.001

Oil Flush and Driver Practice for F150

Date: 3-27-03
Time procedure started: 0830

"√"	Initial	Task
☑	PGW	Install vehicle on chassis dyno
☑	RGW	Use Expedition dyno setup file
☑	PGW	Run UDDS + single HFET
☑	PGW	Drain oil until first drip
☑	PGW	Change oil filter
☑	PGW	Replace drain pug and fill with 6.675 quarts SAE 5W-20 motor oil
☑	PGW	Run UDDS + single HFET
☑	PGW	Drain oil until first drip
☑	PGW	Change oil filter
☑	PGW	Replace drain pug and fill with 6.675 quarts SAE 5W-20 motor oil
☑	PGW	Run UDDS + single HFET
☑	PGW	Drain oil until first drip
☑	PGW	Change oil filter
☑	PGW	Replace drain pug and fill with 6.675 quarts SAE 5W-20 motor oil
☑	BO	Take vehicle to Fleet Lab for rear end lube oil change

Time procedure completed: 1330

Technician name: Phil White

Version 1.3– March 31, 2003 *DRAFT*

Do not cite, quote, use, or distribute without written permission from GHG Center

Appendix A-3
Rear-Axle Lubricant Change Procedure and Observations

Notes:
Ford Research Laboratory has developed this procedure to yield the most consistent possible run - to - run test results and submitted it for use in this Test Plan.
The same technician will perform all rear axle lubricant changes.
Change engine lubricant and filter at the same time.

1. Remove the axle cover and drain plug; allow the lubricant to drain.

2. Remove rear wheels and brakes and soak up any lubricant in the axle tube (for solid beam axles) with a wick mounted on a cleaning rod or wire.

3. Wipe off the remaining lubricant as much as possible from ring, pinion, and carrier gear surfaces, and from inside the housing surface with a clean rag.

4. Use NAPA "MAX-4800," Brake Clean "Brake-091314" (or equivalent) brake cleaner solvent. Spray brake cleaner inside the axle tube and on a clean wick. Use the wick to clean the remaining oil from the axle shafts and tubes. Repeat with clean wicks and more solvent until they are as clean as is possible.

5. Spray the brake cleaner solvent on all gear surfaces and the inside surface of the housing to remove any residual oil. Repeat several times to remove all oil traces. The brake cleaner will evaporate, and requires no further cleanup. All surfaces should look dry.

6. Reinstall the brakes, wheel, axle cover, and drain plug.

7. Remove the fill plug. Fill the housing with the required lubricant volume as indicated in the Owner's Manual. For consistency, use a calibrated volumetric measuring dispenser. DO NOT follow the normal practice of filling the housing until oil escapes from the oil fill plug opening.

8. Replace the fill plug and prepare the vehicle for the 1000 mile mileage accumulation dynamometer runs.

Observer Notes

Date: 4-17-03 Signature: [illegible]

VIN: 1FTRW07L23KA13881 Odometer miles: 16,413.5 Technician Name: Eleodoro Alejandro

Axle Lubricant: (Reference Oil/FEHP) FEHP Volume Added: 5.5 pints

Engine oil changed? (Y/N) Y (4-10-03) See log Technician Name: Robert + Phil

Note whether or not the technician follows all steps outlined above. Enter additional notes below.

Notes:
See attached SwRI Axle Prep workorder (Second oil Change). All tasks above were completed. Axle tubes were not swabbed, but were sprayed with brake cleaner + blown out using compressed air. Axle cover-sealant cured overnight

A-4 Rev. Dec., 2002

Truck will come back next week Thursday

Ford F-150 Axle Prep Workorder (Second Oil Change)

Date: 4-17-03 Technician: RD Charge No.: 08-06269.01.001

Perform in steps shown:

✓1. Remove rear cover and measure volume of oil that comes out. Save drain oil.

6,030

✓2. Pull both axle shafts out (mark them left and right).

✓3. Swab out axle tubes with wick on rod or wire.

✓4. Wipe off oil on ring, pinion, carrier and from inside the housing with rag.

✓5. Use appropriate "Brake Wash" and spray inside axle tubes and on a clean wick. Use wick to clean remaining oil from the axle shafts and tubes. Repeat until as clean as possible. NOTE: BE CAREFUL OF SEALS.

✓6. Use appropriate "Brake Wash" and spray on all gear surfaces and inside axle housing to remove residual oil. Repeat until as clean as possible.

✓7. Record the following (Circle One):

Any water in oil/ axle? Y / N
Any debris in housing (save them)? Y / N

✓8. Reinstall axle shafts on same sides they were removed from.

✓9. Reinstall rear cover using Permatex 34311 product. Be sure to let it cure for at least 4 hours prior to adding oil!

✓10. Measure 5.5 pints of appropriate oil and charge. Verify level that level should be 3/8 to 1/2 inch below fill hole. EM3142-EO

11. Do not add a friction modifier additive!

12. Place parking brake adjusters in "backed off" position. Tape parking brake pedal to prevent use.

VIN 1FTRW07L23KA13881 Kevin Brunner 3/31/03

2003 F150 ODOM. 16,413.5

SRI ETV
08.06269.01.001

Oil Flush and Driver Practice for F150

Date: 4-16-03
Time procedure started: 11:15

"√"	Initial	Task
☑	PGW	Install vehicle on chassis dyno
☑	PW	Use Expedition dyno setup file
☑	PW	Run UDDS + single HFET
☑	PW	Drain oil until first drip
☑	PW	Change oil filter
☑	PW	Replace drain pug and fill with 6.675 quarts SAE 5W-20 motor oil
☑	PW	Run UDDS + single HFET
☑	PW	Drain oil until first drip
☑	PW	Change oil filter
☑	PW	Replace drain pug and fill with 6.675 quarts SAE 5W-20 motor oil
☑	PW	Run UDDS + single HFET
☑	PW	Drain oil until first drip
☑	PW	Change oil filter
☑	PW	Replace drain pug and fill with 6.675 quarts SAE 5W-20 motor oil
☐	PW	Take vehicle to Fleet Lab for rear end lube oil change

Time procedure completed: 3:50

Technician name: PW PW

Version 1.1– January 21, 2003 DRAFT

Do not cite, quote, use, or distribute without written permission from GHG Center

Appendix A-3
Rear Axle Lubricant Change Procedure and Observations

Notes:
Ford Research Laboratory has developed this procedure to yield the most consistent possible run - to - run test results and submitted it for use in this Test Plan.
The same technician will perform all rear axle lubricant changes.
Change engine lubricant and filter at the same time.

1. Remove the axle cover and drain plug; allow the lubricant to drain.

2. Remove rear wheels and brakes and soak up any lubricant in the axle tube (for solid beam axles) with a wick mounted on a cleaning rod or wire.

3. Wipe off the remaining lubricant as much as possible from ring, pinion, and carrier gear surfaces, and from inside the housing surface with a clean rag.

4. Use NAPA "MAX-4800," Brake Clean "Brake-091314," or equivalent brake cleaner solvent. Spray brake cleaner inside the axle tube and on a clean wick. Use the wick to clean the remaining oil from the axle shafts and tubes. Repeat with clean wicks and more solvent until they are as clean as is possible.

5. Spray the brake cleaner solvent on all gear surfaces and the inside surface of the housing to remove any residual oil. Repeat several times to remove all oil traces. The brake cleaner will evaporate, and requires no further cleanup. All surfaces should look dry.
→ completely back-off star-wheels on parking brake

6. Reinstall the brakes, wheel, axle cover, and drain plug.
→ allow RTV to cure overnight

7. Remove the fill plug. Fill the housing with the required lubricant volume as indicated in the Owner's Manual. For consistency, use a calibrated volumetric measuring dispenser. DO NOT follow the normal practice of filling the housing until oil escapes from the oil fill plug opening. → 5.5L

8. Replace the fill plug and prepare the vehicle for the 1000 mile mileage accumulation dynamometer runs.

Observer Notes

Date: 5-15-03 Signature: [illegible]

VIN: 13881 Odometer miles: 178654 Technician Name: al

Axle Lubricant: (Reference Oil/FEHP) 048396 Volume Added: 5.5 Qt
XY-75W140-QL

Engine oil changed? (Y/N) _____ Technician Name: see separate form

Note whether or not the technician follows all steps outlined above. Enter additional notes below.

Notes:

_____

_____

_____

_____

Ford F-150 Axle Prep Workorder (Third Oil Change)

Date: 5/15/03 Technician: al Charge No.: 08-06269.01.001

Perform in steps shown:

1. Remove rear cover and measure volume of oil that comes out. Save drain oil. 2400 mL

2. Pull both axle shafts out (mark them left and right).

3. Swab out axle tubes with wick on rod or wire.

4. Wipe off oil on ring, pinion, carrier and from inside the housing with rag.

5. Use appropriate "Brake Wash" and spray inside axle tubes and on a clean wick. Use wick to clean remaining oil from the axle shafts and tubes. Repeat until as clean as possible. NOTE: BE CAREFUL OF SEALS.

6. Use appropriate "Brake Wash" and spray on all gear surfaces and inside axle housing to remove residual oil. Repeat until as clean as possible.

7. Record the following (Circle One):

   Any water in oil/ axle? Y / N
   Any debris in housing (save them)? Y / N

8. Reinstall axle shafts on same sides they were removed from.

9. Reinstall rear cover using ~~Permatex 34311~~ Loctite 5999 product. Be sure to let it cure for at least 4 hours prior to adding oil!

10. Measure 5.5 pints of appropriate oil and charge. Verify level that level should be 3/8 to 1/2 inch below fill hole.

11. Do not add a friction modifier additive!

12. Place parking brake adjusters in "backed off" position. Tape parking brake pedal to prevent use.

Kevin Brunner 3/31/03

ODOM. 17,865.4

Jun-11-03 14:57 From-DEPT OF EMISSIONS RESEARCH +2105223850 T-902 P.002 F-090

SRI ETV
08.06269.01.001

Oil Flush and Driver Practice for F150

Date: 5-15-03
Time procedure started: 8:15A

"√"	Initial	Task
☑	AGW	Install vehicle on chassis dyno
☑	RW	Use Expedition dyno setup file
☑	AGW	Run UDDS + single HFET
☑	RW	Drain oil until first drip
☑	RW	Change oil filter
☑	RW	Replace drain pug and fill with 6.675 quarts SAE 5W-20 motor oil
☑	RW	Run UDDS + single HFET
☑	RW	Drain oil until first drip
☑	RW	Change oil filter
☑	RW	Replace drain pug and fill with 6.675 quarts SAE 5W-20 motor oil
☑	RW	Run UDDS + single HFET
☑	RW	Drain oil until first drip
☑	RW	Change oil filter
☑	RW	Replace drain pug and fill with 6.675 quarts SAE 5W-20 motor oil
☑	MO	Take vehicle to Fleet Lab for rear end lube oil change

Time procedure completed: 12:00

Technician name: RW - PW

KAW

This page left intentionally blank

APPENDIX B

Test Fuel Analyses

Final Test Summary Report – WO# 22384
Fuel Code: ETV1 and ETV2
April 3, 2003

Property	Result	Units	ETV1	ETV2
	Work Order		22384	22384
	Lab ID#		oddb 28619	oddb 28620
	Sample Type		gasoline	gasoline
Grabner	RVP	psi	9.15	9.11
	Ptot	psi	9.94	9.89
	DVPE	psi	9.04	9
D1319	Aromatic	vol %	30.9	31.2
	Olefins	vol %	1	0.8
	Saturate	vol %	68.1	68
duplicate	Aromatic	vol %	30.4	30
	Olefins	vol %	0.8	0.9
	Saturate	vol %	68.8	69.1
D2622	Sulfur	wt%	0.0033	0.0032
	Sulfur	ppm	33	32
D2699	RON		96.7	96.6
D2700	MON		88.9	88.8
D3231	Phosphorus	g/US gal.	0.0001	< 0.0001
D3237	Lead	g/US gal.	< 0.001	< 0.001
D4052s	API		59.1	59.1
	Specific Gravity		0.7423	0.7424
D86	IBP	°F	93.3	94.9
	5%		115.1	117.4
	10%		128.5	129.6
	15%		138.5	140
	20%		149.4	150.6
	30%		173.2	174.5
	40%		199.7	201.5
	50%		219.5	220.6
	60%		231.9	232.8
	70%		244.3	245
	80%		267.1	267.6
	90%		319.6	321.4
	95%		339.1	339.9
	FBP		406.8	404.9
	Recoverd	mL	98.6	98.2
	Residue	mL	0.3	0.8
	Loss	mL	1.1	1

APPENDIX C

Daily Test Protocol and Checklist

SRI ETV
08.06269.01.001

Daily Test Sheet for F150

Date: _____

NOTE: Test must start between 12:30PM and 1:00PM. Make sure you give yc
preparation.

"√"	Initial	Task
☐	_____	Ensure that dyno has been warmed up for at least 15 minutes
☐	_____	Check parasitic friction curve against reference
☐	_____	Print out parasitic reference curve and attach
☐	_____	If there is not a test running on the dyno at 11:00 am, warm up fo
☐	_____	Setup dyno computer for F150
☐	_____	Install vehicle on chassis dyno and note time: _____
☐	_____	Tie down vehicle, record odometer and rear tire pressures: LR___
☐	_____	Place fuel cart and scale in correct positions and connect to vehic
☐	_____	Connect fuel cart cannister to outside vent
☐	_____	Place RMT in correct position and connect to vehicle
☐	_____	Place fan in front of vehicle in correct position
☐	_____	Place Psychrodyne on front bumper of vehicle and run for 3 minu wet and dry temperatures Psychrodyne start:_____ Psychrodyne stop:_____
☐	_____	Initiate "SwRI Combo" test sequence on Horiba VETS computer
☐	_____	Choose Z/S/Z (Z/S) option
☐	_____	Stepped flow for CVS as follows: – Bag 1: 450 cfm – Bag 2: 350 cfm – Bag 3: 450 cfm – HFET: 550 cfm
☐	_____	Input test information on dyno computer setup page and set in rur
☐	_____	Confirm displayed HP@50 on dyno computer is 15.51
☐	_____	Confirm bag pass leak check
☐	_____	Confirm CVS flow rate of 450 ±5 cfm _____

SRI ETV
08.06269.01.001

Daily Test Sheet for F150

"√"	Initial	Task
☐	_____	Start fuel cart and allow fuel to circulate for ~30 seconds to stabilize
☐	_____	Zero scale and flow meter
☐	_____	Start test, record start time:_____
☐	_____	Record flow meter and scale readings at end of Bag 1
☐	_____	Stop vehicle and record flow meter and scale readings at end of Bag 2
☐	_____	Soak vehicle 10 minutes ± 30 seconds
☐	_____	Prior to start of Bag 3, start fuel cart and allow fuel to circulate for 10 seconds to stabilize
☐	_____	Zero scale and flow meter
☐	_____	Start Bag 3
☐	_____	Record flow meter and scale readings at end of Bag 3
☐	_____	Record flow meter and scale readings at end of prep HFET
☐	_____	Shut off vehicle at the end of the HFET
☐	_____	Record flow meter and scale readings, attach the fuel cart data sheet
☐	_____	Print out and attach dyno and VETS printouts
☐	_____	Deliver data packet to Kevin
☐	_____	Disconnect vehicle and push into SHED for overnight soak
☐	_____	Record time at start of soak: _____

Lead Technician's Signature: _____

Driver's Signature: _____

This page left intentionally blank

APPENDIX D

Dynanometer Setup Data

Dyno set up - Rel. Lubricants

INPUT

Vehicle Model:	2003 F125 SuperCrew 150 klw
FWD/RWD, trans	RWD - A
Tires	P255/70R16
Est. tire dia	30.06
Est load rda	13.83
(1+Rt/Rd)^0.5	1.255
ETW (lb)	5500
I/M lookup** hp @ 50 mph	19.7
Wt non drive axle (lb)	2666
Wt drive axle (lb)	2158
Recent Wt (lb)	4824
Body Width (in)	75
Body Height (in)	73
Est Cd*	0.5

*for truck and vans use 0.5, for all else use 0.4

Calculated Coast Down

55-45 delta Time (sec)	F@50 from dT
16.96	150.09

Average of 3 runs
Horiba Coastdown Data

Meas Drive Axle

	A	B	C
Run1	5.61	1.0276	-0.00940
Run2	7.48	0.9234	-0.00786
Run3	7.51	0.9233	-0.00795
AVG	6.87	0.9581	-0.00840

Meas Non-drive Axle

	A'	B'	C'
Run1	28.48	0.5412	-0.00553
Run2	28.37	0.4393	-0.00433
Run3	27.85	0.3973	-0.00354
AVG	28.23	0.4593	-0.00447

OUTPUT

Vehicle: 2003 F125 SuperCrew

Dyno Set Coeff

Initial Estimate	A =	16.92
	B =	0.1057
	C =	0.03813
	Inertia	5500
	hp@50	15.7

Vehicle:	**2003 F125 SuperCrew**	
	Dyno Set Coeff	
Final Dyno Settings	**A =**	**19.37**
	B =	**0.31504**
	C =	**0.03248**
	Inertia	**5500**
	HP@50	**15.5**

TH

Dyno setup - FEHP Runs

INPUT

Vehicle Model:	2003 F125 SuperCrew FEHP
FWD/RWD, trans	RWD - A
Tires	P255/70R16
Est. tire dia	30.06
Est load rda	13.83
(1+Rt/Rd)^0.5	1.255
ETW (lb)	5500
I/M lookup** hp @ 50 mph	19.7
Wt non drive axle (lb)	2666
Wt drive axle (lb)	2158
Recent Wt (lb)	4824
Body Width (in)	75
Body Height (in)	73
Est Cd*	0.5

*for truck and vans use 0.5, for all else use 0.4

Calculated Coast Down

55-45 delta Time (sec)	F@50 from dT
16.96	150.09

Average of 3 runs
Horiba Coastdown Data

	Meas Drive Axle A	B	C
Run1	11.18	0.7814	-0.00635
Run2	10.53	0.8075	-0.00646
Run3	11.29	0.7325	-0.00608
AVG	11.00	0.7738	-0.00630

	Meas Non-drive Axle A'	B'	C'
Run1	28.48	0.5412	-0.00553
Run2	28.37	0.4393	-0.00433
Run3	27.85	0.3973	-0.00354
AVG	28.23	0.4593	-0.00447

OUTPUT

Vehicle:	2003 F125 SuperCrew FEHP	
	Dyno Set Coeff	
Initial Estimate	A =	16.92
	B =	0.1057
	C =	0.03813
	Inertia	5500
	hp@50	15.5

Vehicle:	**2003 F125 SuperCrew FEHP**	
	Dyno Set Coeff	
Final Dyno Settings	**A =**	**19.37**
	B =	**0.31504**
	C =	**0.03241**
	Inertia	**5500**
	HP@50	**15.5**

INSTRUCTIONS:

1 input all data in grey boxes
2 provide A, B, C (in grey boxes) to RGW
3 RGW will run triplicate twin-axle coastdowns on 48" roll
4 enter coast down A, B, C data into blue boxes
5 final dyno coeff calculated in blue output boxes

** I/M lookup tables are in "g:\epabbs\IM Lookup Tables" directory; current version, as of 10/13/2000, is 1.8.5

Dyno setup - Post Base Runs

INPUT

Vehicle Model:	2003 F150 SuperCrew
FWD/RWD, trans	RWD - A
Tires	P255/70R16
Est. tire dia	30.06
Est load rda	13.83
(1+Rt/Rd)^0.5	1.255
ETW (lb)	5500
I/M lookup** hp @ 50 mph	19.7
Wt non drive axle (lb)	2666
Wt drive axle (lb)	2158
Recent Wt (lb)	4824
Body Width (in)	75
Body Height (in)	73
Est Cd*	0.5

*for truck and vans use 0.5, for all else use 0.4

Calculated Coast Down

55-45	F@50
delta Time (sec)	from dT
16.96	150.09

Average of 3 runs
Horiba Coastdown Data

Meas Drive Axle

	A	B	C
Run1	10.84	0.7500	-0.00582
Run2	11.55	0.7207	-0.00523
Run3	11.10	0.7380	-0.00535
AVG	11.16	0.7362	-0.00547

Meas Non-drive Axle

	A'	B'	C'
Run1	28.48	0.5412	-0.00553
Run2	28.37	0.4393	-0.00433
Run3	27.85	0.3973	-0.00354
AVG	28.23	0.4593	-0.00447

OUTPUT

Vehicle:	2003 F150 SuperCrew	
	Dyno Set Coeff	
Initial Estimate	A =	16.92
	B =	0.1057
	C =	0.03813
	Inertia	5500
	hp@50	15.7

Vehicle:	**2003 F150 SuperCrew**	
	Dyno Set Coeff	
Final Dyno Settings	**A =**	**19.37**
	B =	**0.31504**
	C =	**0.03227**
	Inertia	**5500**
	HP@50	**15.4**

INSTRUCTIONS:

1 input all data in grey boxes
2 provide A, B, C (in grey boxes) to RGW
3 RGW will run triplicate twin-axle coastdowns on 48" roll
4 enter coast down A, B, C data into blue boxes
5 final dyno coeff calculated in blue output boxes

** I/M lookup tables are in "g:\epabbs\IM Lookup Tables" directory; current version, as of 10/13/2000, is 1.8.5

Tire Width	255
Tire Dia	16
Tire Aspect	70
Dyno rad	24
Ktire	125
Karea	0.8

Jun-11-03 14:59 From-DEPT OF EMISSIONS RESEARCH +2105223050 T-802 P.006/021 F-090

APPENDIX E

Outlying Data Review & Analysis

OUTLYING DATA REVIEW & ANALYSIS

The GHG Center reviewed all valid test run data (four test runs were excluded and explanations are provided) for consistency and completed statistical analyses to determine the statistical significance of observed fuel economy changes. The Center noted during the data review that the fuel economy for the reference lubricant for run Base-3 was considerably lower than the fuel economy for the other five test runs. The repeatability of the six FEHP test runs, as measured by the sample standard deviation and COV, compared favorably to the standard deviation and COV of the reference lubricant data without the Base-3 run data included in the data set. Run Base-3's inclusion in the reference lubricant data set made the calculated COV and standard deviation notably larger than the COV and deviation for the FEHP data set. This indicated that the data for run Base-3 could be suspect. Table E-1 summarizes this observation.

Table E-1: Evaluation of Run Base-3 Impact on Variability

Parameter	FEHP Runs[a]	Reference Lubricant Runs (Base 1,2,3,4,6,7)	Reference Lubricant Runs (Base 1,2,4,6,7)
Mean Fuel Economy (mpg)	18.255	17.961	18.021
Standard Deviation (mpg)	0.0296	0.151	0.0408
COV	0.162	0.839	0.226

[A] Six FEHP runs.

The GHG Center evaluated the data for run Base-3 using *ASTM standard E187-02: Standard Practice for Dealing With Outlying Observations*.[(8)] This standard presents methods to test the statistical significance of outlying observations in sample data sets.

The standard suggests a review of test data for inconsistencies or error in the test procedure. A review of all test data for test run Base-3 did not indicate any problems or errors in the test procedure, equipment, calibrations, or other potential sources of error. Gravimetric and volumetric fuel economy cross checks also correspond to the observed carbon balance fuel economy result for run Base-3. Therefore, no physical reason could be identified for the suspect data. The ASTM standard describes a statistical test that can be used to determine whether a data point lies outside the distribution exhibited by the remainder of the data. The standard recommends the following criteria for a single outlying sample in a series of n tests:

$$T_n = (\bar{x} - x_1) / s \qquad \text{(Eqn. E-1)}$$

where:

T_n	=	sample test criterion
x_1	=	low outlying data point
$\bar{x}$	=	mean of sample series for all values
s	=	sample standard deviation for all values

The sample test criterion for the initial reference lubricant test data is calculated as follows:

$$T_6 = (17.961\ mpg - 17.663\ mpg)/0.151 = 1.980 \qquad \text{(Eqn. E-2)}$$

where:

T_6	=	test criteria for n=6 test runs
17.961	=	mean fuel economy for initial reference lubricant runs (mpg)
17.663	=	fuel economy for test run Base 3 (mpg)
0.151	=	standard deviation for initial reference lubricant test runs (mpg)

This value is compared to the calculated critical T values for six tests found in the standard. The critical T values at a significance level of 0.1 percent and 0.5 percent are 2.011 and 1.973, respectively.[8] Based on a comparison to these values, a large T-value for a data point of this low magnitude would occur by chance no more often than 0.5 percent of the time because 1.98 exceeds 1.973 but is less than 2.011. This is significantly less than the 95 percent confidence interval that has been specified as an interval of concern for data obtained for this test. Therefore, based on the analyst's application of the ASTM standard test, the data from run Base-3 can be identified as an outlier.

SRI sought further verification that run Base-3 is the sole potential outlier in the reference lubricant data set. The next lowest fuel economy value for the reference lubricant was evaluated according to the same procedure (with run Base-3 eliminated). The sample test criterion for this value is:

$$T_5 = (18.021\ mpg - 17.973\ mpg)/0.0408 = 1.176 \qquad \text{(Eqn. E-3)}$$

where:

T_5	=	test criteria for n=5 test runs
18.021	=	mean fuel economy for initial reference lubricant runs not including Base 3 (mpg)
17.973	=	fuel economy for run Base 7

The smallest critical T value specified in the ASTM Method (corresponding to a 10 percent significance level) is 1.602,[8] much larger than the calculated T value. Therefore, the likelihood of the calculated T_5 value occurring is much greater than 10 percent, indicating that the subject data is likely from the same sample set as the remainder of the data and is valid.