Environmental Technology Verification

Test Report of Mobile Source Selective Catalytic Reduction

Nett Technologies, Inc.
BlueMAX™ 100 Version A Urea-Based Selective Catalytic Reduction Technology

Prepared by

Southwest Research Institute

RTI International

Under a Cooperative Agreement
with the U.S. Environmental Protection Agency

THE ENVIRONMENTAL TECHNOLOGY VERIFICATION PROGRAM

U.S. Environmental Protection Agency

ETV Joint Verification Statement

TECHNOLOGY TYPE:	**MOBILE DIESEL ENGINE AIR POLLUTION CONTROL**
APPLICATION:	**CONTROL OF EMISSIONS FROM MOBILE DIESEL ENGINES IN NONROAD USE BY SELECTIVE CATALYTIC REDUCTION**
TECHNOLOGY NAME:	**BLUEMAX 100 VERSION A UREA-BASED SELECTIVE CATALYTIC REDUCTION**
COMPANY:	**NETT TECHNOLOGIES, INC.**
ADDRESS:	**2-6707 GOREWAY DRIVE MISSISSAUGA, ON L4V 1P7 CANADA**
PHONE:	**(800) 361-6388**
FAX:	**(905) 672-5949**
E-MAIL:	**mamannan@nett.ca**
WEB SITE:	**http://www.nett.ca**

The U.S. Environmental Protection Agency (EPA) created the Environmental Technology Verification (ETV) Program to facilitate the deployment of innovative or improved environmental technologies through performance verification and dissemination of information. The goal of the ETV Program is to further environmental protection by accelerating the acceptance and use of improved and cost-effective technologies. The ETV Program seeks to achieve this goal by providing high-quality peer-reviewed data on technology performance to those involved in the design, distribution, financing, permitting, purchase, and use of environmental technologies.

The ETV Program works in partnership with recognized standards and testing organizations; stakeholder groups, which consist of buyers, vendor organizations, permitters, and other interested parties; and with the full participation of individual technology developers. The program evaluates the performance of innovative technologies by developing test plans that are responsive to the needs of stakeholders, conducting field or laboratory tests (as appropriate), collecting and analyzing data, and preparing peer-reviewed reports. All evaluations are conducted in accordance with rigorous quality assurance (QA) protocols to ensure that data of known and adequate quality are generated and that the results are defensible.

The Air Pollution Control Technology Center (APCT Center), which is one of six centers under the ETV Program, is operated by RTI International[1] in cooperation with EPA's National Risk Management Research Laboratory. The APCT Center has evaluated the performance of an emissions control system consisting of a selective catalytic reduction (SCR) technology.

[1] RTI International is a trade name of Research Triangle Institute.

ENVIRONMENTAL TECHNOLOGY VERIFICATION TEST DESCRIPTION

All tests were performed in accordance with the *Test/QA Plan for the Verification Testing of Selective Catalytic Reduction Control Technologies for Highway, Nonroad, and Stationary Use Diesel Engines* and the *Test-Specific Addendum to ETV Mobile Source Test/QA Plan for Nett Technologies for the BlueMAX 100 Version A System*. These documents are written in accordance with the applicable generic verification protocol and include requirements for quality management and QA, procedures for product selection and auditing of the test laboratories, and the test reporting format.

The mobile diesel engine air pollution control technology was tested in August 2009 at Southwest Research Institute. The performance verified was the percentage of emissions reduction achieved by the technology for particulate matter (PM), nitrogen oxides (NO_x), hydrocarbons (HC), and carbon monoxide (CO) relative to the performance of the same baseline engine without the technology in place. Operating conditions were documented, and ancillary performance measurements were made. A summary of the ETV test is provided in **Table 1**.

Table 1. Summary of the Environmental Technology Verification Test

Test type	Non-road steady-state FTP and NRTC
Engine family	Box NR-7 Tier 1
Engine make, model year	Caterpillar 3406, 1989 (upgraded in 2006)
Service class	Non-road, heavy-duty diesel engine
Engine rated power	306 hp at 2100 rpm
Engine displacement	14.6 L, inline six cylinder
Technology	Nett Technologies, Inc.'s BlueMAX 100 version A
Technology description	Urea-based SCR
Test cycle or mode description	Three hot-start, eight-mode steady-state tests according to FTP test and the nonroad transient cycle for baseline engine, degreened, and aged systems
Test fuel description	Ultra-low–sulfur diesel fuel with 15 ppm sulfur maximum
Critical measurements	PM, NO_x, HC, and CO
Ancillary measurements	CO_2, NO, NO_2 (by calculation), NH_3, soluble organic fraction of PM, exhaust backpressure, exhaust temperature, and fuel consumption

CO_2 = carbon dioxide, FTP = Federal Test Procedure, hp = horsepower, NO = nitric oxide, NO_2 = nitrogen dioxide, NH_3 = ammonia, NRTC = Nonroad Transient Cycle, ppm = parts per million, rpm = revolutions per minute.

VERIFIED TECHNOLOGY DESCRIPTION

Nett Technologies' BlueMAX 100 version A Urea-Based SCR System utilizes a zeolite catalyst coating on a cordierite honeycomb substrate for heavy-duty diesel nonroad engines for use with commercial ultra-low–sulfur diesel fuel (ULSD) conforming to 40 *Code of Federal Regulations* 89.330.

This verification statement describes the performance of the tested technology on the diesel engine and fuels identified in Table 1 and applies only to the use of the Nett Technologies' BlueMAX 100 version A Urea-Based SCR System on nonroad engines fueled by ULSD [15 parts per million (ppm) or less] fuel.

The monitoring and notification system that was functionally tested and used with this technology includes sensors for urea level, urea consumption, urea pressure, urea tank leakage, and a mechanism to interrupt engine restart in the event of an empty urea tank.

VERIFICATION OF PERFORMANCE

The Nett Technologies' BlueMAX 100 version A Urea-Based SCR System achieved the reduction in tailpipe emissions shown in **Table 2** compared to baseline operation without the system.

Table 2. Verified Emissions Reductions

Test Type	System Type	Fuel	Emissions Reduction (%)				95% Confidence Limits on the Emissions Reduction (%)			
			PM	NO_x	HC	CO	PM	NO_x	HC	CO
8-Mode	Degreened	ULSD	12	70	99	92	4.7 to 20	68 to 71	[b]	91 to 94
	Aged	ULSD	−12	68	99	94	[a]	64 to 71	[b]	92 to 95
NRTC	Degreened	ULSD	26	66	100	87	[c]	[c]	[c]	[c]
	Aged	ULSD	30	65	100	89	[c]	[c]	[c]	[c]

[a] The emissions reduction could not be distinguished from zero with 95% confidence.

[b] The emissions reduction could not be distinguished from 100% with 95% confidence.

[c] Confidence limits could not be determined for NRTC (Nonroad Transient Cycle) emissions reductions because replicate test runs were not performed.

The functional tests demonstrated the BlueMAX 100 system was operating properly; however, a malfunction in the urea dosing pump and the associated error indicator lamp occurred during emission testing. As a result, the urea pump was replaced before continuing with the emissions testing.

The APCT Center quality manager has reviewed the test results and quality control data and has concluded that the Data Quality Objectives given in the generic verification protocol and the Test/QA Plan have been attained. APCT Center QA staff have conducted technical assessments of the test laboratory procedures and of the data handling. These assessments confirm that the ETV tests were conducted in accordance with the EPA–approved Test/QA Plan.

This verification statement verifies the emissions characteristics of the Nett Technologies' BlueMAX 100 version A Urea-Based SCR System for the stated application. Extrapolation outside of that range should be performed with caution and an understanding of the scientific principles that control the performance of the technology. This verification focuses on emissions. Potential technology users may obtain other types of performance information from the manufacturer.

In accordance with the generic verification protocol, this verification statement is valid, commencing on the date below, indefinitely for application of the Nett Technologies' BlueMAX 100 version A Urea-Based SCR System within the range of applicability of the statement.

signed by Andrew Gillespie for — *6/16/2010*
Sally Gutierrez — Date
Director
National Risk Management Research Laboratory
Office of Research and Development
United States Environmental Protection Agency

signed by Jason Hill — *6/3/2010*
Jason Hill — Date
Director
Air Pollution Control Technology Center
RTI International

NOTICE: ETV verifications are based on an evaluation of technology performance under specific, predetermined criteria and the appropriate QA procedures. EPA and RTI make no express or implied warranties regarding the performance of the technology and do not certify that a technology will always operate as verified. The end user is solely responsible for complying with any and all applicable local, state, and federal requirements. Mention of commercial product names does not imply endorsement.

Environmental Technology Verification Report

Mobile Source Selective Catalytic Reduction

Nett Technologies, Inc.
BlueMAX™ 100 Version A
Urea-Based Selective Catalytic Reduction Technology

Prepared by

RTI International
Southwest Research Institute

EPA Cooperative Agreement No. CR831911-01-4

EPA Project Officer:
Michael Kosusko
Air Pollution Prevention and Control Division
National Risk Management Research Laboratory
Office of Research and Development
U.S. Environmental Protection Agency
Research Triangle Park, NC 27711

June 2010

Notice

This document was prepared by RTI International (RTI) and its subcontractor, Southwest Research Institute, with partial funding from Cooperative Agreement No. CR831911-01-4 with the U.S. Environmental Protection Agency (EPA). The document has been submitted for RTI's and EPA's peer and administrative reviews and has been approved for publication. Mention of corporation names, trade names, or commercial products does not constitute endorsement or recommendation for use of specific products.

Foreword

Established by the U.S. Environmental Protection Agency (EPA), the Environmental Technology Verification (ETV) Program is designed to accelerate the development and commercialization of new or improved technologies through third-party verification and reporting of performance. The goal of the ETV Program is to verify the performance of commercially ready environmental technologies through the evaluation of objective and quality-assured data to provide potential purchasers and permitters with an independent, credible assessment of the technology they are buying or permitting.

The Air Pollution Control Technology Center (APCT Center) is part of EPA's ETV Program and is operated as a partnership between RTI International (RTI) and EPA. The APCT Center verifies the performance of commercially ready air pollution control technologies. Verification tests use approved protocols, and verified performance is reported in verification statements signed by EPA and RTI officials. RTI contracts with Southwest Research Institute to perform verification tests on engine emissions control technologies.

Retrofit air pollution control systems used to control emissions from mobile diesel engines are among the technologies evaluated by the APCT Center. The APCT Center has developed (and EPA has approved) the *Generic Verification Protocol for Determination of Emissions Reductions From Selective Catalytic Reduction Control Technologies for Highway, Nonroad, and Stationary Use Diesel Engines* to provide guidance on the verification testing of specific products that are designed to control emissions from diesel engines.

The following report reviews the performance of Nett Technologies, Inc.'s BlueMAX 100 version A system, which uses a urea-based SCR technology. ETV testing of this technology was conducted in August 2009 at Southwest Research Institute. All testing was performed in accordance with an approved Test/QA Plan that implements the requirements of the generic verification protocol at the test laboratory.

Availability of Report

Copies of this verification report are available from the following:

- RTI International
  Discovery & Analytical Sciences Group
  P.O. Box 12194
  Research Triangle Park, NC 27709-2194

- U.S. Environmental Protection Agency
  Air Pollution Prevention and Control Division (E343-02)
  109 T.W. Alexander Drive
  Research Triangle Park, NC 27711

This verification report is also available on the following EPA Web sites:

- http://www.epa.gov/etv/vt-apc.html#msscr (pdf format)
- http://www.epa.gov/ncepihom/

Contents

Notice i
Foreword ii
Availability of Report iii
Contents iv
Figures v
Tables v
Acronyms/Abbreviations vi
Acknowledgments viii
1.0 Introduction 1
2.0 Product Description 2
3.0 Test Documentation 3
3.1 Engine Description 3
3.2 Engine Fuel Description 4
3.3 Functional Tests 5
3.4 Summary of Emissions Measurement Procedures 7
3.5 Deviations from the Test/Quality Assurance Plan 9
3.6 Documented Test Conditions 9
4.0 Summary and Discussion of Emissions Results 14
4.1 Quality Assurance 21
5.0 References 22

Figures

Figure 1. The BlueMAX 100 Version A Urea-Based Selective Catalytic Reduction System installed for emissions tests. 2
Figure 2. The Caterpillar 3406 engine, as upgraded in 2006. 4
Figure 3. A schematic of the emissions sampling system at Southwest Research Institute..... 8
Figure 4. A torque map of the rebuilt 1989 Caterpillar 3406 engine using ultra-low–sulfur diesel fuel. 9
Figure 5. Exhaust backpressure for each test mode, average of all replicates, for baseline and degreened and aged BlueMAX 100 Version A systems..... 11
Figure 6. Exhaust temperature for each test mode, average of all replicates, for baseline and degreened and aged BlueMAX 100 Version A systems..... 11

Tables

Table 1. Engine Identification Information..... 3
Table 2. Selected Fuel Properties and Specifications 5
Table 3. Results from Functional Tests of the Aged BlueMAX System…… 6
Table 4. Test Engine Baseline Emissions Requirement for 1989 Caterpillar 3406 Rebuilt in 2006 and Conforming to Box NR-7 Tier 1 8
Table 5. Engine Exhaust Backpressure and Average System Inlet/Outlet Temperature 10
Table 6. Particulate Characterization—Soluble Organic Fraction from Run 2 of Each Triplicate Eight-Mode Test and the NRTC Tests 12
Table 7. Brake-Specific Fuel Consumption (by Carbon Balance)..... 13
Table 8. Summary of Fuel Consumption Reductions 13
Table 9a. Emissions Data per Mode for Baseline Eight-Mode Tests 14
Table 9b. Emissions Data per Mode for Degreened Eight-Mode Tests..... 15
Table 9c. Emissions Data per Mode for Aged Eight-Mode Tests 16
Table 10. Eight-Mode Test Cycle for Variable-Speed Engines[7] 17
Table 11. Composite Weighted Emissions Rates (U.S. Common Units) 18
Table 12. Composite Weighted Emissions Rates (Metric Units)..... 19
Table 13. Summary of Verification Test Data (U.S. Common Units)..... 20
Table 14. Summary of Verification Test Data (Metric Units) 20
Table 15. Summary of Verification Test Emissions Reductions 21

Acronyms/Abbreviations

ºC	degrees Celsius
ºF	degrees Fahrenheit
APCT Center	Air Pollution Control Technology Center
ASTM	American Society for Testing and Materials
BSFC	brake-specific fuel consumption
CFR	Code of Federal Regulations
CO	carbon monoxide
CO_2	carbon dioxide
EPA	U.S. Environmental Protection Agency
ETV	environmental technology verification
g	gram(s)
g/hp-hr	grams per horsepower-hour
g/hr	grams per hour
g/kWhr	grams per kilowatt-hour
HC	hydrocarbon(s)
hp	horsepower
Hz	hertz
in. Hg	inch(es) of mercury
kPa	kilopascals
L	liter(s)
lb/bhp-hr	pounds mass of fuel per brake horsepower-hour
lb-ft	pound foot (feet)
MIL	malfunction indicator lamp
NH_3	ammonia
NO	nitric oxide
NO_2	nitrogen dioxide
NO_x	nitrogen oxides
NRTC	nonroad transient cycle
PM	particulate matter
ppm	parts per million
QA	quality assurance
QC	quality control

rpm	revolutions per minute
RTI	RTI International
SCR	selective catalytic reduction
SOF	soluble organic fraction
SwRI	Southwest Research Institute
ULSD	ultra-low–sulfur diesel

Acknowledgments

The authors acknowledge the support of all of those who helped plan and conduct the verification activities. In particular, we would like to thank Michael Kosusko, Project Officer, and Robert Wright, Quality Manager, both of the U.S. Environmental Protection Agency's National Risk Management Research Laboratory in Research Triangle Park, NC. We would also like to acknowledge the assistance and participation of all Nett Technologies, Inc. personnel who supported the test effort.

For more information on the Nett Technologies' BlueMAX 100 version A Urea-Based SCR System, please contact the following:

Mr. Mannan Mohammed
Nett Technologies, Inc.
2-6707 Goreway Drive
Mississauga, ON L4V 1P7
Canada
Phone: (800) 361-6388
Fax: (905) 672-5949
E-mail: mamannan@nett.ca
Nett Technologies Web site: http://www.nett.ca

For more information on verification testing of mobile sources air pollution control and selective catalytic reduction systems, please contact the following:

Mr. Jason Hill
RTI International
P.O. Box 12194
Research Triangle Park, NC 27709-2194
Phone: (919) 541-7443
E-mail: apctvc@rti.org
ETV Program Web site: http://www.epa.gov/etv

1.0 Introduction

This environmental technology verification (ETV) report reviews the performance of Nett Technologies, Inc.'s BlueMAX 100 version A system, which comprises urea-based selective catalytic reduction (SCR) technology submitted for testing by Nett Technologies. ETV testing of this technology was conducted during a series of tests in August 2009 by Southwest Research Institute (SwRI), under contract with the Air Pollution Control Technology Center (the APCT Center). The APCT Center is operated by RTI International (RTI)* in partnership with the U.S. Environmental Protection Agency's (EPA's) ETV Program. The objective of the APCT Center and the ETV Program is to use high-quality data to verify the performance of air pollution control technologies, including those designed to control air emissions from diesel engines. With the assistance of a panel of technical experts assembled for this purpose, RTI has established the APCT Center program area specifically to evaluate the performance of diesel exhaust catalysts, particulate filters, SCR systems, fuels additives, and engine modification control technologies for mobile diesel engines. Based on the activities of this technical panel, the *Generic Verification Protocol for Determination of Emissions Reductions from Selective Catalytic Reduction Control Technologies for Highway, Non-road, and Stationary Use Diesel Engines*[1] was developed. This protocol was chosen as the best guide to verify the immediate performance effects of the BlueMAX 100 version A Urea-Based SCR System. To determine these effects, emissions results from a heavy-duty nonroad diesel engine were compared to emissions results obtained operating the same engine with the same fuel, but with the BlueMAX 100 version A technology installed. The specific Test/Quality Assurance (QA) Plan addendum for the ETV test of the technology submitted by Nett Technologies was developed and approved in June 2009.[2] The goal of the test was to measure the emissions control performance of the BlueMAX 100 version A Urea-Based SCR System and its emissions reduction relative to an uncontrolled engine.

Section 2.0 describes the technology. Section 3.0 documents the procedures and methods used for the test and the conditions under which the test was conducted. Section 4.0 summarizes and discusses the results of the test. Section 5.0 presents the references used to compile this ETV report.

This report contains only summary data and the verification statement. Complete documentation of the test results is provided in a separate test report[3] and an internal audit of the data quality report.[4] These reports include the raw test data from product testing and supplemental testing, equipment calibration results, and QA and quality control (QC) activities and results. Complete documentation of QA and QC activities and results, raw test data, and equipment calibration results are retained in SwRI's files for 7 years.

The verification statement applies only to the use of the BlueMAX 100 version A Urea-Based SCR System on nonroad engines. This statement is applicable to engines fueled only by ultra-low–sulfur diesel [ULSD; 15 parts per million (ppm) or less] fuel.

* RTI International is a trade name of Research Triangle Institute.

2.0 Product Description

Nett Technologies BlueMAX 100 version A unit, which is shown installed in **Figure 1,** is a urea-based SCR system using a zeolite catalyst coating on a cordierite honeycomb substrate for heavy-duty diesel nonroad engines operating with commercial ULSD and conforming to 40 *Code of Federal Regulations* (CFR) 89.330.

Nett Technologies provided a degreened BlueMAX 100 version A Urea-Based SCR System that had seen 98.1 hours of service on a Caterpillar 3406 engine installed in a rubber tire loader. The degreened SCR system had serial number of GLS-0102 and a date of manufacture of August 14, 2008.

Nett Technologies provided an aged BlueMAX 100 version A Urea-Based SCR System that had seen 1,147.2 hours of service on a Caterpillar 3406 engine installed in a rubber tire loader. The aged SCR system had serial number of GLS-0101 and a date of manufacture of August 14, 2008.

Figure 1. The BlueMAX 100 Version A Urea-Based Selective Catalytic Reduction System installed for emissions tests.

3.0 Test Documentation

ETV testing took place during August 2009 at SwRI under contract to the APCT Center. Testing was performed in accordance with the following:

- *Generic Verification Protocol for Determination of Emissions Reductions From Selective Catalytic Reduction Control Technologies for Highway, Nonroad, and Stationary Use Diesel Engines*[1]
- *Test/QA Plan for the Verification Testing of Selective Catalytic Reduction Control Technologies for Highway, Nonroad, and Stationary Use Diesel Engines*[5]
- *Test-Specific Addendum to ETV Mobile Source Test/QA Plan for Nett Technologies for the BlueMAX™ 100 Version A System.*[2]

Nett Technologies personnel reviewed the generic verification protocol and had an opportunity to review the Test/QA Plan prior to testing.

3.1 Engine Description

ETV verification testing was performed on an SwRI-provided 1989 Caterpillar 3406 in-line, six-cylinder, direct-injected, turbocharged, nonroad diesel engine with a serial number 070V30573. The 14.6 liter (L) engine was expected to have a nominal rated power of 306 horsepower (hp) at 2,100 revolutions per minute (rpm) and a rated torque of 765 pound feet (lb-ft) at 2,100 rpm. This engine was originally built in March 1989 and had an advertised power of 285 hp. The engine was rebuilt and upgraded from Tier 0 to Tier 1 emissions levels in January 2006 at the Holt Company of Texas. The upgraded engine conforms to the power requirements for a Tier 1 NR-7 engine. The test fuel was an ULSD that met specifications in 40 CFR 89.330.

Table 1 provides the engine identification details, and **Figure 2** shows the test engine at SwRI.

Table 1. Engine Identification Information

Engine serial number	070V30573
Date of manufacture	March 1989
Make	Caterpillar
Model year	1989
Model	3406
Engine displacement and configuration	14.6 L, inline 6 cylinder
Service class	Nonroad heavy-duty diesel engine
EPA engine family identification	Box NR-7 Tier 1
Certification standards (g/hp-hr)	HC = 1.3, CO = 11.4, NO_x = 9.2, PM = 0.54
Rated power (nameplate)	306 hp at 2,100 rpm
Rated torque (nameplate)	765 lb-ft at 2,100 rpm
Certified emissions control system	Not applicable; Tier 1 engine
Aspiration	Turbo charged
Fuel system	Direct injected

g = grams, HC = hydrocarbons, hp-hr = horsepower-hour.

Figure 2. The Caterpillar 3406 engine, as upgraded in 2006.

3.2 Engine Fuel Description

All emissions testing was conducted with ULSD fuel meeting the 40 CFR 89.330 specification for emissions-certified fuel.[6] **Table 2** summarizes the selected fuel properties from Chevron Phillips Chemical Company, LLP's analyses. All testing was conducted using fuel from a single batch, which was identified as EM-6556-F.

Table 2. Selected Fuel Properties and Specifications

Item	CFR Specification[a]		Test Fuel
	ASTM	Type 2-D	Diesel 2007 ULS Fuel
Cetane number	D613	40–50	46
Cetane index	D976	42.0–48.0	45.3
Distillation range:			
Initial boiling point, ºC (ºF)	D86	171–204 (340–400)	180 (356)
10% point, ºC (ºF)	D86	204–238 (400–460)	207 (404)
50% point, ºC (ºF)	D86	243–282 (470–540)	253 (487)
90% point, ºC (ºF)	D86	293–332 (560–630)	307 (584)
End point, ºC (ºF)	D86	321–366 (610–690)	347 (656)
Gravity (American Petroleum Institute)	D287	32–37	35.8[b]
Specific gravity	D4052	0.8400–0.8550	0.8457
Total sulfur, ppm	D2622	7–15	11.0[c]
Hydrocarbon composition:			
Aromatics, %	D5186	28.0-32.0	29.3[e]
Olefins, saturates %	D5186	Not applicable[d]	70.7[e]
Flash point (minimum), ºC (ºF)	D93	54 (130)	64 (148)
Viscosity, centistokes at 40ºC	D445	2.0–3.0	2.2

ºC = degrees Celsius, ºF = degrees Fahrenheit, 2-D = Type 2 diesel fuel, ASTM = American Society for Testing and Materials.

[a] 40 CFR 89.330(b)(3)(e) for year 2006 or 2007 heavy-duty diesel engines.[6]

[b] Measured per ASTM D4052.

[c] Measured per ASTM D5453; this method is an acceptable substitute for ASTM D2622.

[d] Remainder of the HCs.

[e] Measured per ASTM D1319.

3.3 Functional Tests

The results from the functional tests are given in **Table 3**. The table shows the tasks that were performed to force a diagnostic code for a specific monitoring system, and the timing for a system malfunction indicator lamp (MIL) and and error code. Table 3 also includes the observed diagnostic indication events.

A functional test was performed on the urea tank level monitoring system. A sensor was used to monitor whether the urea level decreased below twenty percent of full capacity, or below two percent to empty. When the urea tank was determined to be empty, electrical power to the engine's starter solenoid was to be disengaged. Since the test cell dynamometer is always connected to the engine's flywheel, the engine is cranked by rotating the dynamometer instead of using a starter. Therefore, a separate indicator was used to monitor starter solenoid power. A light was wired in series to the BlueMAX relay that was to power the solenoid so that when the system disengaged the solenoid power, the light should turn off. During the functional test, the urea light flashed and error code "E" was displayed, and the BlueMAX system was shut off. After the system was powered on and off four times, the starter solenoid light switched off, as expected. All functional tests ran as expected. At the conclusion of the high urea pressure test, the engine was shut off and restarted for the MIL and error code to clear.

Table 3. Results from Functional Tests of the Aged BlueMAX System

UREA TANK LEVEL SENSOR				
TASK	TIME/EVENTS	VIEW ALARM BOX	OBSERVED EVENTS	OBSERVED ERROR CODE
Fill tank with urea				
Switch on system, do not start engine	Allow air pump to cycle off			
Unplug level sensor at tank	Wait 1 minute	MIL light on with error code 17	MIL blinked when level sensor was unplugged	Error code: 17
Plug in sensor	Wait 30 seconds	MIL light and error code off	No MIL	No error
UREA TANK LOW LEVEL				
TASK	TIME/EVENTS	VIEW ALERT LIGHTS	OBSERVED EVENTS	OBSERVED ERROR CODE
Switch on system, do not start engine				
Open vale at bottom of urea tank, drain just under 20% level	Wait 5-6 minutes	UREA light on	UREA light illuminated at approximately 5 minutes	No error
Drain tank to 2% level	Wait 5-6 minutes	Switch between MIL and UREA lights with error code E	MIL and UREA lights blinked at additional 4 minutes	Error code: E
Refill urea tank	Wait 1-2 minutes	MIL, UREA, and error codes off	No MIL or UREA light	No error
STARTER INTERRUPT				
TASK	TIME/EVENTS	VIEW ALERT LIGHTS	OBSERVED EVENTS	OBSERVED ERROR CODE
Switch on system, do not start engine				
Drain tank to 2% level	Wait 5-6 minutes	Switch between MIL and UREA lights with error code E	MIL and UREA lights blinked at approximately 4 minutes	Error code E at 1 additional minute
Switch off system	Wait 45 seconds			
Switch on system	Wait 45 seconds			
Repat switching system off and on three times		Engine should not start (replaced with light to show if starter is enabled)	Light for starter enable was off	
Refill urea tank	Wait 1-2 minutes	Engine should start, urea, MIL, and error code off	Light for starter enable illuminated and no MIL or UREA light	No error
LOW UREA PRESSURE, LOW UREA CONSUMPTION, UREA LEAK				
TASK	TIME/EVENTS	VIEW ALERT LIGHTS	OBSERVED EVENTS	OBSERVED ERROR CODE
Start engine and system				
Run engine at rated condition				
Unplug larger tube from tank to urea pump and air tube to pump	Run 30 seconds	MIL on	MIL blinked when urea and air tubes disconnected	
Continute to run	Run 10 minutes	Error code 19		Error code 19 at 1 additional minute
Reconnect tubes, continue to run	Run 1-2 minutes	MIL and error code off	No MIL light	No error code
HIGH UREA PRESSURE				
TASK	TIME/EVENTS	VIEW ALERT LIGHTS	OBSERVED EVENTS	OBSERVED ERROR CODE
Start engine and system				
Run engine at rated condition and crimp urea nozzle tubing	Run 30-60 seconds	MIL on	MIL blinked within one minute	
Continute to run	Run 10 minutes	Error code 16		Error code 16 at 1 additional minute
Remove crimp	Run 1-2 minutes	MIL and error code off	Engine was stopped, restarted and run at rated conditon to allow MIL to stop	Same for error code

3.4 Summary of Emissions Measurement Procedures

The ETV tests consisted of baseline uncontrolled tests and tests with the control technology installed. Engine emissions sampling equipment and instrumentation adhered to techniques developed by EPA in 40 CFR, Part 89, Subparts D and E.[7] Emissions were measured over triplicate runs of the hot eight-mode steady-state cycle sequence for nonroad diesel engines[7] and single cold-start and hot-start runs of the nonroad transient cycle (NRTC) sequence[8] for the baseline, degreened BlueMAX, and aged BlueMAX exhaust configurations.

The 1989 Caterpillar 3406 engine was operated in an engine dynamometer test cell, with exhaust sampled using full-flow dilution constant volume sampling techniques to measure regulated emissions of hydrocarbons (HC), carbon monoxide (CO), oxides of nitrogen (NO_x), and total particulate matter (PM), along with carbon dioxide (CO_2) and nitric oxide (NO). Nitrogen dioxide (NO_2) emissions were determined as the difference between NO_x and NO emissions. Gaseous emissions levels were corrected for dilution air ambient (background) levels. Emissions of HC, CO, CO_2, and NO_x were measured using a Horiba MEXA-7200 DEGR analyzer bench. NO emissions were measured with a separate chemiluminescent analyzer without an NO_2/NO converter. PM emissions were determined from the net weight gain of two Pallflex T60A20 filters used in series.

Soluble organic fraction (SOF) of the PM emissions was determined from the particulate-laden filter from the emissions tests. The SOF was extracted using a toluene and ethanol solvent and a soxhlet apparatus. To determine the mass of SOF, the filter set was reweighed after the extraction process. The weight difference between loaded and extracted conditions of the filters represented the mass of SOF.

Ammonia slip from the BlueMAX 100 Version A Urea-Based SCR System was measured directly from the exhaust stack downstream of the BlueMAX 100 version A system using extractive Fourier transform infrared (FTIR) spectroscopy. The FTIR measurements were conducted according to EPA CTM-038 and 40 CFR, Part 63, Appendix A, Method 320, with the exception that the measurement is based on continuous sampling and analysis, giving results at a 1-hertz (Hz) rate. This method is performed instead of the techniques given in CTM-038 in which the FTIR cell is evacuated and filled with sample gas or the cell is purged with 10 cell volumes of sample before the analysis of one composite sample gas.

In addition to results presented in this report, raw data were gathered at the rate of one series of measurements per second over each test to record the engine speed, torque value, concentration of selected emissions, exhaust temperature, and various pressures. **Figure 3** shows the sampling system and related components. The system is designed to comply with the requirements of 40 CFR, Part 89.[7]

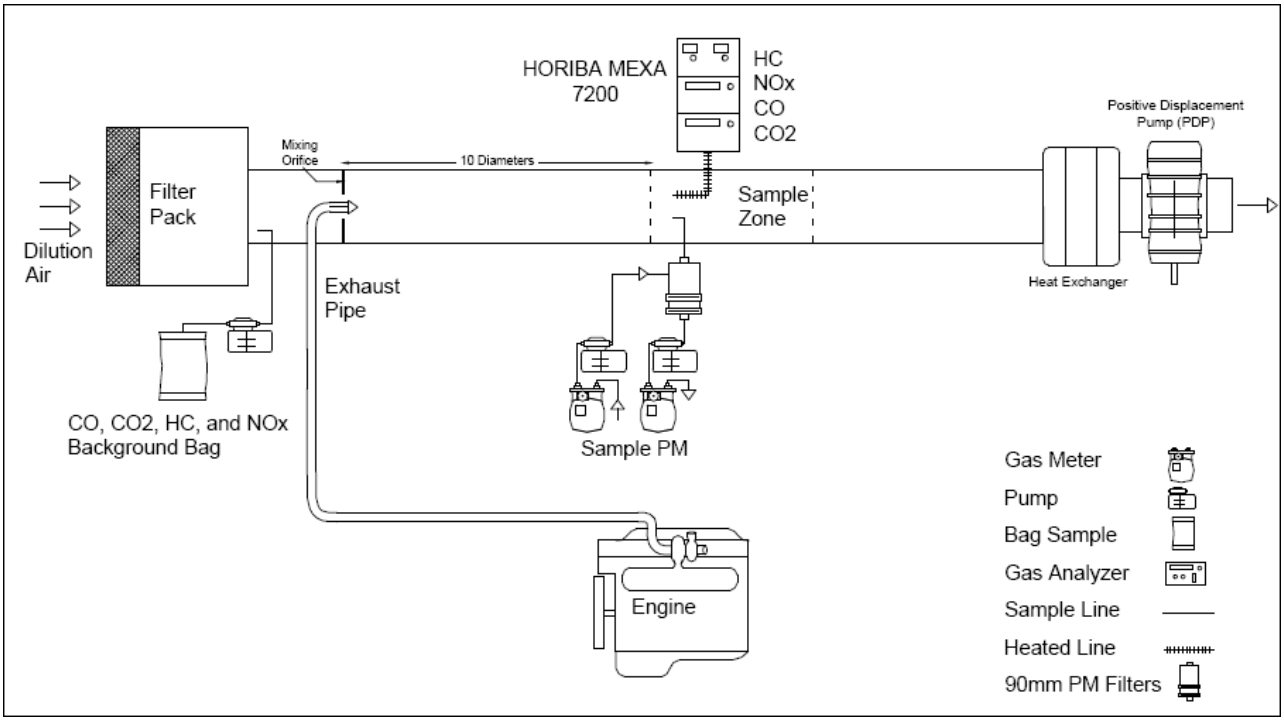

Figure 3. A schematic of the emissions sampling system at Southwest Research Institute.

The verification protocol requires that the emissions from engines used for verification testing must not exceed 110% of the certification standards for that engine category.[1] Furthermore, the Office of Transportation and Air Quality assumes an additional 5% reduction in PM emissions due to the use of ULSD fuel.

For 1996–2000 nonroad engines, these certification standards are defined in EPA's on-highway engine family box NR-7. Although this engine was originally manufactured in 1989, as discussed in Section 3.0, it was rebuilt to the Tier 1 standard in 2006 and conforms to the power requirements for Tier 1 NR-7 engine. Therefore, the criteria established to determine that the test engine is acceptable and verification testing may proceed are that baseline emissions from the engine using ULSD fuel cannot exceed 110% of NR-7 (1.1 × NR-7) for HC, CO, and NO_x; and 110% of [(NR-7)−5%] or (1.045 × NR-7) for PM. Certification standards for NR-7 are HC 1.3 g/kW-hr, CO 11.4 grams per kilowatt-hour (g/kW-hr), NO_x 9.2 g/kW-hr, and PM 0.54 g/kW-hr. **The adjusted levels that the test engine must meet are HC 1.4 g/kW-hr (1.1 g/hp-hr), CO 12.5 g/kW-hr (9.4 g/hp-hr), NO_x 10.1 g/kW-hr (7.5 g/hp-hr), and PM 0.56 g/kW-hr (0.42 g/hp-hr).**

Table 4 presents the required emissions performance of the test engine and the certification standards and baseline results for comparison.

Table 4. Test Engine Baseline Emissions Requirement for 1989 Caterpillar 3406 Rebuilt in 2006 and Conforming to Box NR-7 Tier 1

	HC		CO		NO_x		PM	
	g/kWhr	g/hp-hr	g/kWhr	g/hp-hr	g/kWhr	g/hp-hr	g/kWhr	g/hp-hr
NR-7 Tier 1	1.3	1.0	11.4	8.5	9.2	6.9	0.54	0.40
Acceptance criteria	1.4	1.1	12.5	9.4	10.1	7.5	0.56	0.42
Baseline, 8 mode	0.26	0.19	2.21	1.65	6.87	5.13	0.34	0.26
Baseline, NRTC	0.29	0.22	2.08	1.55	7.22	5.38	0.46	0.34

3.5 Deviations from the Test/Quality Assurance Plan

The third eight-mode test of the aged system on August 13, 2009, was stopped after Mode 5 due to a loose exhaust clamp. Another test was attempted on August 14, 2009, but it was evident that urea was not being injected during the test. SwRI test cell personnel reported that the MIL for the BlueMAX 100 version A Urea-Based SCR System was not illuminated during the test. Afterward, when the system was powered on, the MIL lit, and after a period of 20 minutes, error code 19 was displayed. Error code 19 was observed before with the degreened system and was corrected by flushing the urea pump with deionized water. Several attempts were made to flush the aged urea pump with deionized water, some of these attempts were assisted by a representative of Nett Technologies, but the MIL and error code would not clear. RTI permitted replacement of the urea pump with a new unit. Nett installed the pump (serial number 961792850000033) and an electronic configuration before the third valid eight-mode test was conducted on August 20, 2009.

3.6 Documented Test Conditions

Engine Performance

Figure 4 shows torque map information measured on the rebuilt 1989 Caterpillar 3406 engine using ULSD fuel. The torque mapping was performed at SwRI on July 29, 2009.

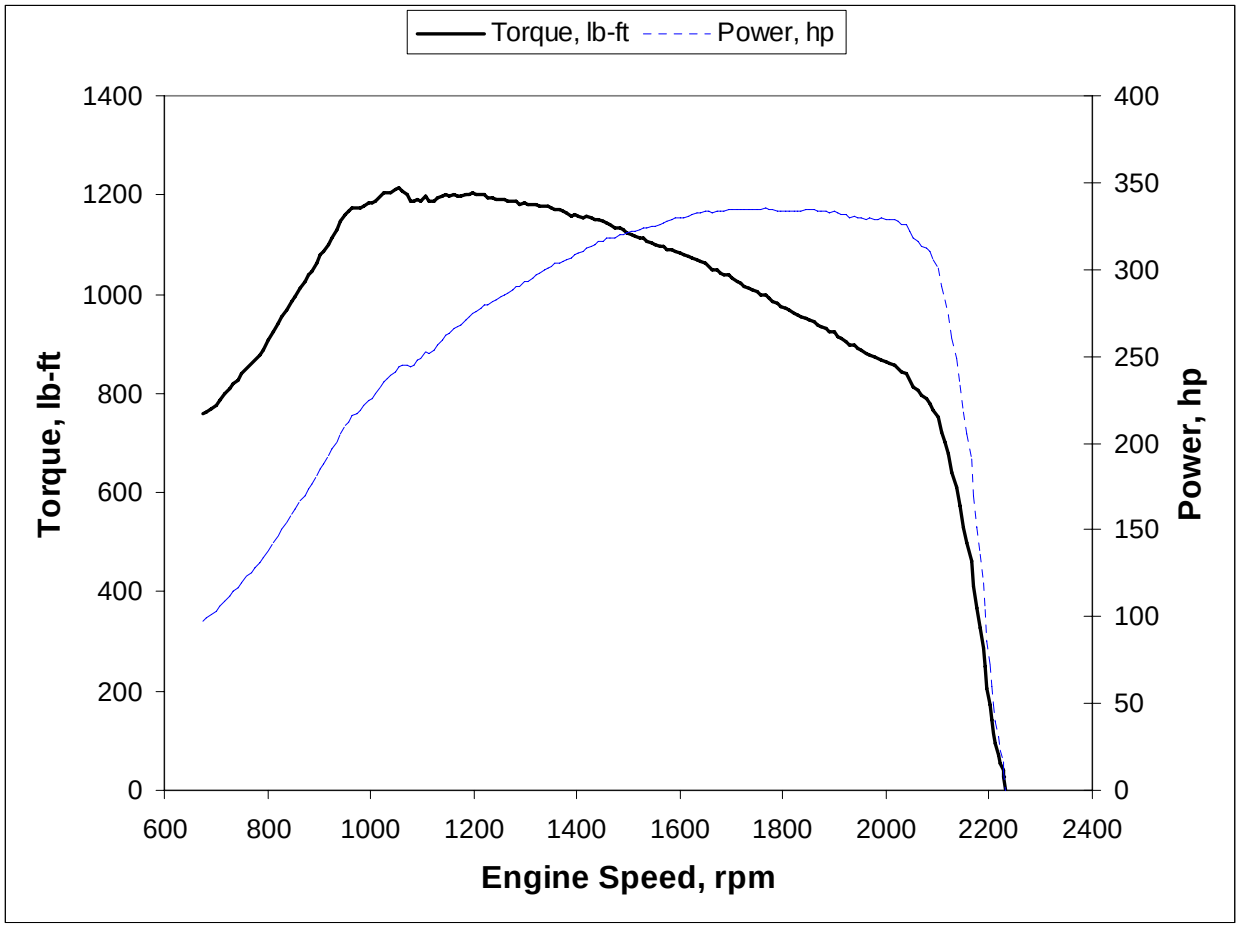

Figure 4. A torque map of the rebuilt 1989 Caterpillar 3406 engine using ultra-low–sulfur diesel fuel.

Engine Exhaust Backpressure and Exhaust Temperature

Table 5 provides the maximum exhaust backpressure levels and average inlet and exhaust temperatures for the eight-mode tests and NRTC tests of the baseline and BlueMAX 100 version A Urea-Based SCR systems.

Table 5. Engine Exhaust Backpressure and Average System Inlet/Outlet Temperature

Test Number	Test Type	Test Date	Maximum Exhaust Backpressure		Average System Inlet Temperature[a]		Average System Exhaust Temperature	
			kPa	in. Hg	ºC	ºF	ºC	ºF
Baseline with ULSD Fuel on a 1989 Caterpillar 3406 (Rebuilt 2006) Test Engine								
0573-766-8M	Hot start, 8 mode	8/5/2009	7.90	2.33	403.9	759.1	Not applicable	Not applicable
0573-768-8M	Hot start, 8 mode	8/5/2009	7.91	2.34	404.6	760.3	Not applicable	Not applicable
0573-771-8M	Hot start, 8 mode	8/5/2009	7.91	2.34	406.6	764.0	Not applicable	Not applicable
0573-762-C1	NRTC cold	8/4/2009	6.03	1.78	329.0	624.2	Not applicable	Not applicable
0573-764-H1	NRTC hot	8/4/2009	5.86	1.73	344.4	652.0	Not applicable	Not applicable
Degreened BlueMAX 100 Version A with ULSD Fuel on a 1989 Caterpillar 3406 (Rebuilt 2006) Test Engine								
0573-774-8M	Hot start, 8 mode	8/7/2009	14.52	4.29	431.8	809.2	415.0	778.9
0573-776-8M	Hot start, 8 mode	8/10/2009	14.37	4.24	429.8	805.6	413.1	775.6
0573-779-8M	Hot start, 8 mode	8/10/2009	14.04	4.15	428.0	802.3	413.9	776.9
0573-789-C1	NRTC cold	8/12/2009	9.35	2.76	352.0	665.7	336.5	637.7
0573-791-H1	NRTC hot	8/12/2009	9.75	2.88	369.5	697.1	364.3	687.8
Aged BlueMAX 100 Version A with ULSD Fuel on a 1989 Caterpillar 3406 (Rebuilt 2006) Test Engine								
0573-794-8M	Hot start, 8 mode	8/13/2009	13.51	3.99	428.7	803.7	411.1	772.0
0573-796-8M	Hot start, 8 mode	8/13/2009	13.29	3.93	428.0	802.4	411.1	772.0
0573-803-8M	Hot start, 8 mode	8/20/2009	13.94	4.12	431.0	807.7	413.5	776.2
0573-807-C1	NRTC cold	8/21/2009	9.24	2.73	355.5	671.9	338.1	640.5
0573-810-H1	NRTC hot	8/21/2009	9.48	2.80	372.6	702.7	365.5	689.9

in. Hg = inch(es) of mercury, kPa = kilopascals.

[a] For the baseline configuration, the system inlet temperature refers to the exhaust stack temperature.

Figure 5 shows the maximum exhaust backpressure for each mode of the eight-mode nonroad steady-state test, as averaged over the three test runs, for the baseline engine and the degreened and aged systems. **Figure 6** shows the average exhaust temperature for each mode of the eight-mode nonroad steady-state test, as averaged over the three test runs, for the baseline engine and the degreened and aged systems.

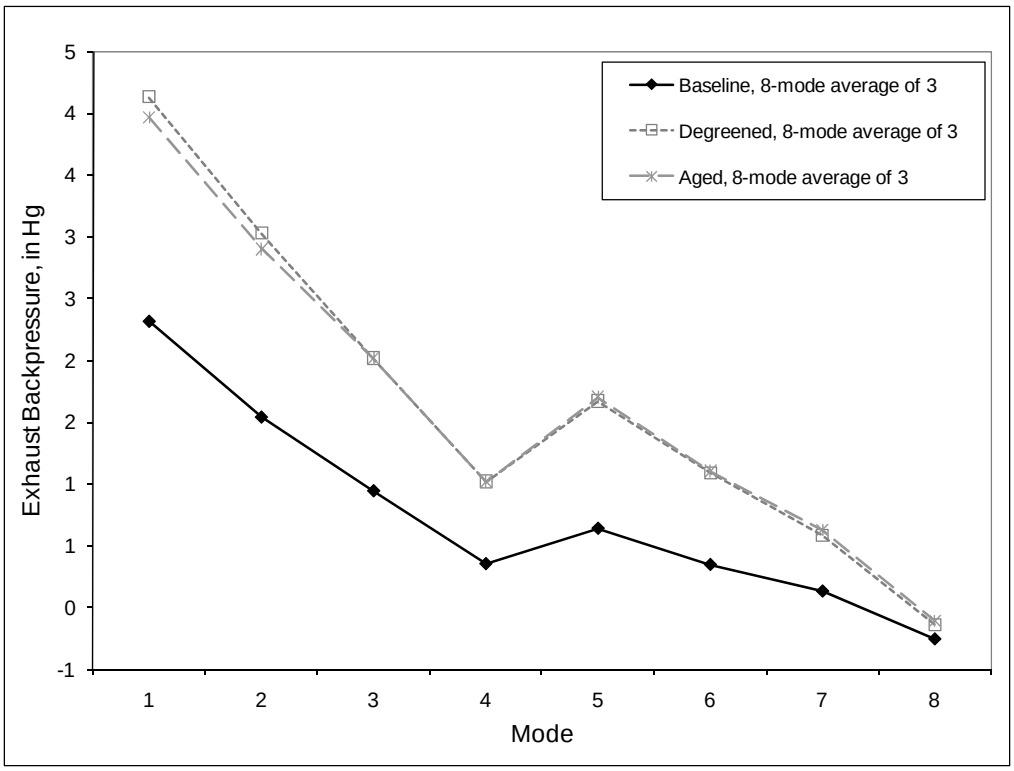

Figure 5. Exhaust backpressure for each of eight test modes, averaged over all three replicates, for baseline and degreened and aged BlueMAX 100 Version A systems.

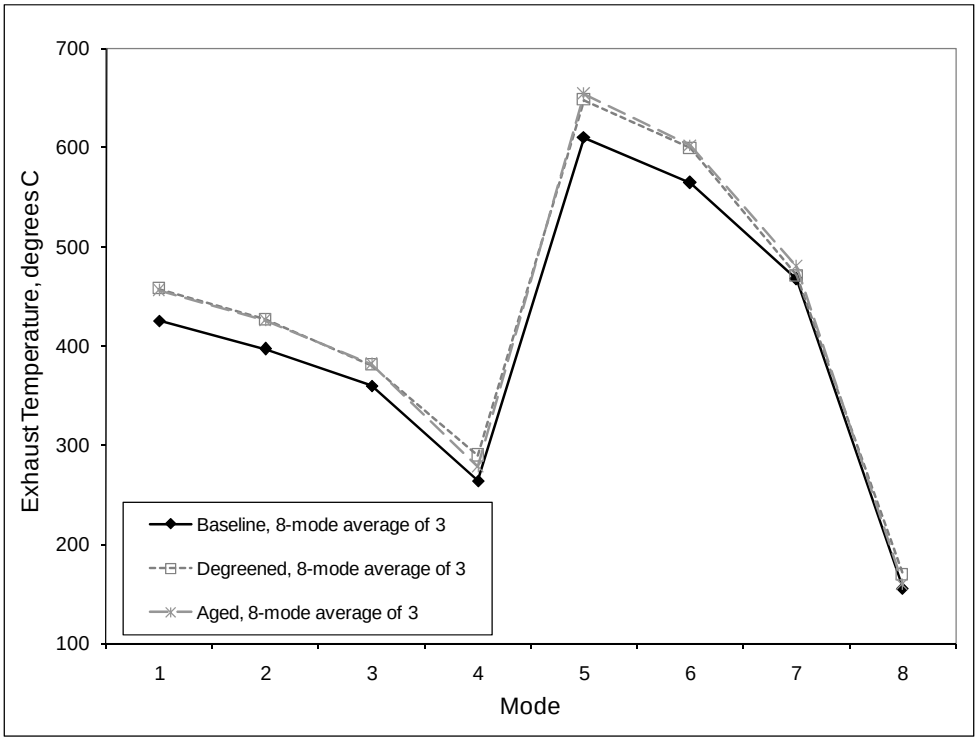

Figure 6. Exhaust temperature for each of eight test modes, averaged over all three replicates, for baseline and degreened and aged BlueMAX 100 Version A systems.

Soluble Organic Fraction

The PM was tested for SOF for the second test of each set of triplicate eight-mode tests and the NRTC tests. **Table 6** lists the results. Due to very low PM accumulation during Mode 8, SOF analyses on these filters were not feasible.

Table 6. Particulate Characterization—Soluble Organic Fraction from Run 2 of Each Triplicate Eight-Mode Test and the NRTC Tests

Test Description	Test Number	Mode	PM, g/hr	SOF, % of PM	Test Number	Test Type	PM, g/kW-hr	SOF, % of PM
Baseline	0573-768-8M (Run 2 of 3)	1	35.5	56.7	0573-762-C1	NRTC cold	0.431	22.9
		2	35.2	57.8				
		3	52.3	50.2				
		4	106.3	30.7				
		5	72.2	3.4	0573-764-H1	NRTC hot	0.459	24.7
		6	47.2	11.5				
		7	19.0	35.6				
		8	0.0	[a]				
Degreened	0573-776-8M (Run 2 of 3)	1	26.4	45.0	0573-789-C1	NRTC cold	0.302	4.3
		2	25.9	6.0				
		3	32.1	12.3				
		4	79.5	3.7				
		5	107.0	5.3	0573-791-H1	NRTC hot	0.339	1.0
		6	54.7	0.0				
		7	14.3	0.0				
		8	0.0	[a]				
Aged	0573-796-8M (Run 2 of 3)	1	31.5	8.0	0573-807-C1	NRTC cold	0.289	1.3
		2	22.7	0.0				
		3	29.1	0.0				
		4	92.2	0.0				
		5	186.0	34.1	0573-810-H1	NRTC hot	0.327	0.0
		6	67.7	4.4				
		7	15.5	0.0				
		8	0.0	[a]				

g/hr = grams per hour.

[a] SOF analysis not performed on PM filters from idle modes due to very low accumulations.

Brake-Specific Fuel Consumption

The fuel consumption was not measured directly during the engine testing. Rather, a calculated "carbon-balance" fuel consumption rate was determined based on the measured exhaust flow rate and the carbon content (i.e., the CO and the CO_2) in the exhaust gas analysis. For the eight-mode tests, the individual per-mode values for fuel consumption were weighted according to the weighting factors in **Table 10** in 40 CFR Part 89, Subpart E, Appendix B[7] and were summed to calculate the brake-specific fuel consumption (BSFC) for each test. For the NRTC tests, the weighted BSFC calculations are similar to the weighted emissions calculations described in Section 4.0. **Table 7** shows the weighted BSFC results for each of the

eight-mode steady-state tests and cold-start and hot-start NRTC tests for the baseline, degreened, and aged systems. **Table 8** compares the fuel consumption during the baseline eight-mode test runs with that measured during the eight-mode tests with the BlueMAX 100 Version A degreened and aged systems installed.

Table 7. Brake-Specific Fuel Consumption (by Carbon Balance)

Test Number	Test Type	Test Date	BSFC	
			lb/bhp-hr	kg/kWhr
Baseline with ULSD Fuel on a 1989 Caterpillar 3406 (Rebuilt 2006) Test Engine				
0573-766-8M	Hot start, 8 mode	8/5/2009	0.389	0.237
0573-768-8M	Hot start, 8 mode	8/5/2009	0.390	0.237
0573-771-8M	Hot start, 8 mode	8/5/2009	0.389	0.237
Mean, Hot Start, 8 Mode, Baseline			0.389	0.237
0573-762-C1	NRTC cold	8/4/2009	0.411	0.250
0573-764-H1	NRTC hot	8/4/2009	0.401	0.244
Weighted, NRTC, Baseline			0.402	0.244
Degreened BlueMAX 100 Version A with ULSD Fuel on a 1989 Caterpillar 3406 (Rebuilt 2006) Test Engine				
0573-774-8M	Hot start, 8 mode	8/7/2009	0.391	0.238
0573-776-8M	Hot start, 8 mode	8/10/2009	0.398	0.255
0573-779-8M	Hot start, 8 mode	8/10/2009	0.409	0.253
Mean, Hot Start, 8 Mode, Degreened			0.399	0.243
0573-789-C1	NRTC cold	8/12/2009	0.429	0.261
0573-791-H1	NRTC hot	8/12/2009	0.418	0.254
Weighted, NRTC, Degreened			0.419	0.254
Aged BlueMAX 100 Version A with ULSD Fuel on a 1989 Caterpillar 3406 (Rebuilt 2006) Test Engine				
0573-794-8M	Hot start, 8 mode	8/13/2009	0.390	0.237
0573-796-8M	Hot start, 8 mode	8/13/2009	0.389	0.237
0573-803-8M	Hot start, 8 mode	8/20/2009	0.402	0.244
Mean, Hot Start, 8 Mode, Aged			0.394	0.239
0573-807-C1	NRTC cold	8/21/2009	0.420	0.255
0573-810-H1	NRTC hot	8/21/2009	0.414	0.252
Weighted, NRTC, Aged			0.414	0.252

lb/bhp-hr = pounds mass of fuel per brake horsepower-hour

Table 8. Summary of Fuel Consumption Reductions

System Type	Fuel	8 Mode, Steady-State	
		% Reduction	95% Confidence Limits
Degreened	ULSD	−2.6	[a]
Aged	ULSD	−1.1	[a]

[a] The fuel consumption reduction cannot be distinguished from zero with 95% confidence.

4.0 Summary and Discussion of Emissions Results

The following three tables report the per-mode emissions from the eight-mode tests that were conducted: baseline (**Table 9a**), with a degreened BlueMAX 100 Version A Urea-Based SCR System installed (**Table 9b**) and with an aged BlueMAX 100 Version A Urea-Based SCR System installed (**Table 9c**). The concentration measurements are given in units of grams per hour for each mode for all species. The "bhp from work" (i.e., the integrated measured power during each test period) values are also shown in these tables.

Table 9a. Emissions Data per Mode for Baseline Eight-Mode Tests

Test Number	Mode	PM	NO_X	NO	NO_2[a]	NO_2/NO_x	HC	CO	CO_2	NH_3	bhp from Work
		g/hr				%	g/hr			ppm	
0573-766-8M	1	39.9	1,389.7	1,236.5	153.2	11.0	49.3	134.9	163,495	0.8	304.8
	2	37.3	1,054.5	937.4	117.1	11.1	50.1	131.2	125,260	0.5	227.4
	3	52.8	685.0	596.0	88.9	13.0	59.2	148.2	91,911	0.5	151.1
	4	107.5	205.5	163.5	42.0	20.4	53.7	232.9	43,309	0.4	29.9
	5	73.2	1,299.9	1,179.4	120.5	9.3	4.3	872.2	137,945	0.7	275.4
	6	50.6	1,179.0	1,086.2	92.7	7.9	4.4	679.7	103,343	0.6	207.2
	7	18.2	990.8	918.0	72.9	7.4	5.4	345.4	70,071	0.5	138.4
	8	0.0	124.5	123.3	1.2	1.0	6.1	23.9	6,330	0.3	0.0
0573-768-8M	1	35.5	1,391.4	1,250.1	141.3	10.2	53.4	128.8	163,092	0.5	303.3
	2	35.2	1,057.7	952.5	105.3	10.0	48.3	130.9	125,599	0.4	227.2
	3	52.3	682.1	605.2	76.9	11.3	59.2	151.0	91,682	0.4	149.8
	4	106.3	203.4	173.3	30.1	14.8	54.7	234.9	43,274	0.4	28.9
	5	72.2	1,295.5	1,182.7	112.8	8.7	5.1	847.3	138,808	0.6	276.3
	6	47.2	1,170.5	1,082.3	88.2	7.5	6.0	677.3	103,094	0.6	206.9
	7	19.0	972.6	907.2	65.4	6.7	4.5	340.4	69,163	0.5	137.3
	8	0.0	129.3	129.3	0.0	0.0	6.0	23.4	6,180	0.3	0.1
0573-771-8M	1	34.0	1392.0	1233.6	158.4	11.4	52.8	131.9	162,088	0.4	302.3
	2	38.6	1059.9	943.6	116.3	11.0	49.6	128.2	125,190	0.5	225.2
	3	50.9	695.4	608.8	86.6	12.5	60.2	153.6	92,619	0.3	151.9
	4	97.6	209.9	174.8	35.1	16.7	54.4	233.9	43,080	0.4	30.6
	5	66.8	1297.6	1168.4	129.1	10.0	6.0	838.8	137,412	0.5	276.0
	6	46.1	1170.7	1069.1	101.7	8.7	4.6	674.0	101,165	0.6	204.2
	7	18.8	981.9	904.4	77.5	7.9	4.6	333.8	69,372	0.5	137.6
	8	0.0	152.1	151.1	1.0	0.7	3.9	22.8	6,709	0.3	1.9

[a] NO_2 is calculated as $NO_x - NO$.

Table 9b. Emissions Data per Mode for Degreened Eight-Mode Tests

Test Number	Mode	PM	NO_X	NO	NO_2[a]	NO_2/NO_x	HC	CO	CO_2	NH_3	bhp from Work
		g/hr				%	g/hr			ppm	
0573-774-8M	1	26.6	477.0	363.5	113.5	23.8	0.6	23.7	163,492	1.2	296.1
	2	25.3	309.8	226.1	83.6	27.0	0.3	22.5	129,235	0.8	226.2
	3	28.7	228.4	155.3	73.1	32.0	0.4	21.5	95,312	0.6	177.9
	4	71.8	81.1	65.6	15.4	19.1	0.9	22.2	44,077	0.4	29.5
	5	126.8	343.2	331.7	11.5	3.4	0.0	33.3	141,621	0.9	271.2
	6	55.5	238.9	234.1	4.7	2.0	0.0	29.8	105,361	0.4	207.1
	7	15.1	161.8	147.7	14.1	8.7	0.0	22.8	70,657	0.4	137.3
	8	0.2	137.1	65.6	71.5	52.1	0.0	13.5	7,904	0.2	2.0
0573-776-8M	1	26.4	478.6	375.3	103.4	21.6	0.6	24.3	163,575	0.9	295.8
	2	25.9	320.1	244.3	75.9	23.7	0.5	23.4	130,457	0.7	229.8
	3	32.1	217.6	158.5	59.1	27.2	0.3	21.1	94,278	0.5	151.9
	4	79.5	81.0	75.4	5.6	7.0	0.9	22.6	43,383	0.3	29.6
	5	107.0	343.6	338.7	4.9	1.4	0.0	34.4	141,920	0.6	273.0
	6	54.7	233.9	233.9	0.0	0.0	0.0	28.5	104,712	0.4	205.1
	7	14.3	161.3	151.6	9.7	6.0	0.0	22.5	72,289	0.3	140.9
	8	0.0	134.7	67.4	67.4	50.0	0.0	8.9	7,992	0.2	2.5
0573-779-8M	1	17.9	500.7	379.9	120.8	24.1	0.5	19.8	162,996	0.4	264.2
	2	25.2	326.2	243.7	82.5	25.3	0.3	20.3	129,299	0.4	227.7
	3	30.3	229.9	161.5	68.4	29.8	0.2	16.4	93,299	0.4	149.3
	4	74.8	83.1	72.8	10.4	12.5	1.1	18.3	43,475	0.3	29.6
	5	98.6	348.8	336.0	12.8	3.7	0.0	33.5	140,867	0.4	272.3
	6	52.0	251.1	245.1	6.0	2.4	0.0	28.5	105,745	0.4	207.8
	7	14.3	167.9	149.5	18.4	10.9	0.0	16.2	70,841	0.3	138.2
	8	0.0	133.3	59.1	74.2	55.7	0.0	7.0	7,330	0.2	1.7

[a] NO_2 is calculated as $NO_x - NO$.

Table 9c. Emissions Data per Mode for Aged Eight-Mode Tests

Test Number	Mode	PM	NO_X	NO	NO_2[a]	NO_2/NO_x	HC	CO	CO_2	NH_3	bhp from Work
		g/hr				%	g/hr			ppm	
0573-794-8M	1	29.4	501.5	371.7	129.8	25.9	0.1	19.3	159,379	10.2	296.6
	2	25.2	331.5	229.0	102.4	30.9	0.4	20.5	127,049	3.7	229.3
	3	27.7	229.7	144.2	85.5	37.2	0.5	17.7	92,404	1.3	149.7
	4	70.5	72.3	61.5	10.8	14.9	0.8	18.5	44,722	0.7	33.0
	5	281.5	278.7	277.2	1.5	0.5	0.0	24.9	140,147	0.7	272.7
	6	68.8	227.5	227.5	0.0	0.0	0.0	21.8	102,768	0.3	204.5
	7	12.2	285.4	243.4	41.9	14.7	0.0	18.9	71,170	12.2	139.8
	8	0.0	107.2	54.8	52.4	48.9	0.0	12.0	5,986	1.5	0.0
0573-796-8M	1	31.5	462.6	339.5	123.1	26.6	0.4	18.6	159,099	0.4	296.6
	2	22.7	301.5	210.8	90.7	30.1	0.4	17.4	124,409	0.4	226.4
	3	29.1	220.0	141.0	79.0	35.9	0.6	17.1	92,301	0.3	150.9
	4	92.2	72.4	61.2	11.2	15.5	1.3	16.0	42,570	0.3	28.7
	5	186.0	278.3	272.0	6.3	2.3	0.0	23.7	139,611	0.3	272.4
	6	67.7	232.9	229.0	3.9	1.7	0.0	21.6	103,086	0.3	206.3
	7	15.5	282.3	233.0	49.3	17.5	0.1	17.9	69,555	0.3	136.8
	8	0.0	130.3	61.3	69.0	53.0	0.1	12.1	7,569	2.0	1.4
0573-803-8M	1	27.4	548.8	379.6	169.3	30.8	0.0	21.1	164,036	2.0	295.0
	2	26.5	356.3	232.6	123.8	34.7	0.0	18.9	128,120	1.2	222.5
	3	29.3	246.2	142.3	103.9	42.2	0.0	15.7	94,015	0.8	149.0
	4	74.0	94.3	57.3	37.0	39.2	1.2	14.7	45,409	0.5	30.4
	5	122.3	417.4	384.7	32.7	7.8	0.0	22.9	140,688	0.7	270.6
	6	52.5	345.9	315.2	30.7	8.9	0.0	19.2	104,621	0.3	203.5
	7	7.1	304.0	238.4	65.6	21.6	0.0	16.2	69,886	0.3	134.8
	8	0.0	127.4	49.0	78.4	61.6	0.0	8.5	7,712	1.4	0.5

[a] NO_2 is calculated as $NO_x - NO$.

Results of this verification test were obtained by calculating a composite value of the emissions during each of the operating modes. The composite value E_{COMP} for nonroad tests is obtained from the multimode nonroad test following the weightings in 40 CFR 89 Subpart E, Appendix B as appropriate for the intended nonroad use as shown in Equation 1 below.

$$\left(E_{COMP}\right)_i = \sum_{j=1}^{k} f_j \bullet E_{MODE_j} \qquad \text{(Eq. 1)}$$

Where: $(E_{COMP})_I$ = Combined emission rate for test i^{th} of n tests required at test point
f_i = Mode weighting factor from 40 CFR 89, Subpart E, Appendix B for j^{th} mode
E_{MODEj} = Pollutant emissions rate during j^{th} mode
k = Total number of modes for intended application per 40 CFR 89

Table 10 shows the weighting factors, f_j, for the eight modes that are used to calculate the composite emissions figures.

Table 10. Eight-Mode Test Cycle for Variable-Speed Engines[7]

Mode Number	Test Segment	Engine Speed[a]	Observed Torque[b] (Percentage of Maximum Observed)	Minimum Time in Mode (Minutes)	Weighting Factors
1	1	Rated	100	5.0	0.15
2	1	Rated	75	5.0	0.15
3	1	Rated	50	5.0	0.15
4	1	Rated	10	5.0	0.10
5	2	Intermediate	100	5.0	0.10
6	2	Intermediate	75	5.0	0.10
7	2	Intermediate	50	5.0	0.10
8	2	Idle	0	5.0	0.15

[a] Engine speed (non-idle): ±2% of point.
Engine speed (intermediate): Calculate as 75% and 50% of the maximum observed torque.
Engine speed (idle): Idle speed is specified by the manufacturer.

[b] Torque (non-idle): Throttle fully open for 100% points.
Other non-idle points: ±2% of engine maximum value.
Torque (idle): Throttle fully closed. Load less than 5% of peak torque.

For the NRTC results, weighted transient emissions rates were calculated according to equation 2.[9]

$$Official\ transient\ emissions\ result = 0.05 \times cold\ start\ emissions\ rate + 0.95 \times hot\ start\ emissions\ rate \quad \text{(Eq. 2)}$$

Tables 11 and 12 show these composite-weighted emissions rates. For the eight-mode tests, these rates were used to calculate the mean and standard deviations for the baseline and controlled emissions rates. These data were in turn used to calculate mean emissions reductions and 95% confidence limits. These calculations are based on the generic verification protocol[1] and the Test/QA Plan.[2]

Table 11. Composite Weighted Emissions Rates (U.S. Common Units)

Test Number	Test Date	Exhaust PM	NO_x	NO	NO_2[a]	NO_2/NO_x	HC	CO	CO_2
		g/bhp-hr				%	g/bhp-hr		
Baseline Engine, 8 Mode									
0573-766-8M	8/5/2009	0.265	5.11	4.59	0.518	10.1	0.188	1.66	558
0573-768-8M	8/5/2009	0.257	5.11	4.64	0.468	9.2	0.192	1.65	559
0573-771-8M	8/5/2009	0.249	5.16	4.63	0.532	10.3	0.192	1.64	558
Average 8 Mode		0.257	5.13	4.62	0.506	9.9	0.190	1.65	558
Baseline Engine, NRTC									
0573-762-C1	8/4/2009	0.321	5.26	4.69	0.563	10.7	0.174	1.61	590
0573-764-H1	8/4/2009	0.342	5.39	4.95	0.443	8.22	0.219	1.55	576
Weighted NRTC		0.341	5.38	4.94	0.449	8.34	0.217	1.55	576
Degreened BlueMAX 100 Version A, 8 Mode									
0573-774-8M	8/7/2009	0.230	1.51	1.18	0.329	21.8	0.00173	0.140	564
0573-776-8M	8/10/2009	0.230	1.53	1.24	0.288	18.8	0.00175	0.130	575
0573-779-8M	8/10/2009	0.217	1.64	1.29	0.352	21.5	0.00162	0.120	590
Average 8 Mode		0.226	1.56	1.24	0.323	20.7	0.00170	0.130	576
Degreened BlueMAX 100 Version A, NRTC									
0573-789-C1	8/12/2009	0.225	2.27	1.79	0.478	21.1	0.001	0.458	619
0573-791-H1	8/12/2009	0.253	1.82	1.33	0.491	26.9	0.000	0.185	603
Weighted NRTC		0.251	1.85	1.35	0.490	26.6	0.000	0.199	604
Aged BlueMAX 100 Version A, 8 Mode									
0573-794-8M	8/13/2009	0.334	1.57	1.20	0.366	23.3	0.00126	0.110	563
0573-796-8M	8/13/2009	0.294	1.53	1.16	0.371	24.2	0.00224	0.110	562
0573-803-8M	8/20/2009	0.232	1.88	1.34	0.536	28.5	0.000755	0.100	581
Average 8 Mode		0.287	1.66	1.24	0.424	25.6	0.00142	0.107	569
Aged BlueMAX 100 Version A, NRTC									
0573-807-C1	8/21/2009	0.215	2.19	1.58	0.609	27.8	0.009	0.443	606
0573-810-H1	8/21/2009	0.242	1.88	1.22	0.663	35.3	0.000	0.153	598
Weighted NRTC		0.240	1.89	1.23	0.660	34.9	0.000	0.168	598

[a] NO_2 is calculated as $NO_x - NO$.

Table 12. Composite Weighted Emissions Rates (Metric Units)

Test Number	Test Date	Exhaust PM	NO_X	NO	NO_2[a]	NO_2/NO_X	HC	CO	CO_2
		g/kWhr				%	g/kWhr		
Baseline Engine, 8 Mode									
0573-766-8M	8/5/2009	0.355	6.85	6.16	0.695	10.1	0.252	2.23	748
0573-768-8M	8/5/2009	0.345	6.85	6.23	0.628	9.2	0.257	2.21	750
0573-771-8M	8/5/2009	0.334	6.92	6.21	0.713	10.3	0.257	2.20	748
Average 8 Mode		0.345	6.88	6.20	0.679	9.9	0.255	2.21	748
Baseline Engine, NRTC									
0573-762-C1	8/4/2009	0.430	7.05	6.29	0.755	10.7	0.233	2.16	791
0573-764-H1	8/4/2009	0.459	7.23	6.64	0.594	8.22	0.294	2.08	772
Weighted NRTC		0.457	7.21	6.62	0.602	8.34	0.291	2.08	772
Degreened BlueMAX 100 Version A, 8 Mode									
0573-774-8M	8/7/2009	0.308	2.02	1.58	0.442	21.8	0.00232	0.188	756
0573-776-8M	8/10/2009	0.308	2.05	1.67	0.386	18.8	0.00235	0.174	771
0573-779-8M	8/10/2009	0.291	2.20	1.73	0.472	21.5	0.00217	0.161	791
Average 8 Mode		0.303	2.09	1.66	0.433	20.7	0.00228	0.174	772
Degreened BlueMAX 100 Version A, NRTC									
0573-789-C1	8/12/2009	0.302	3.04	2.40	0.641	21.1	0.002	0.614	830
0573-791-H1	8/12/2009	0.339	2.44	1.78	0.658	26.9	0.000	0.248	809
Weighted NRTC		0.337	2.48	1.81	0.657	26.6	0.000	0.267	810
Aged BlueMAX 100 Version A, 8 Mode									
0573-794-8M	8/13/2009	0.448	2.11	1.61	0.491	23.3	0.00169	0.148	755
0573-796-8M	8/13/2009	0.394	2.05	1.55	0.497	24.2	0.00300	0.148	754
0573-803-8M	8/20/2009	0.311	2.52	1.80	0.719	28.5	0.00101	0.134	779
Average 8 Mode		0.385	2.23	1.66	0.569	25.6	0.00190	0.143	763
Aged BlueMAX 100 Version A, NRTC									
0573-807-C1	8/21/2009	0.288	2.94	2.12	0.817	27.8	0.012	0.594	813
0573-810-H1	8/21/2009	0.325	2.52	1.64	0.889	35.3	0.000	0.205	802
Weighted NRTC		0.322	2.53	1.65	0.885	34.9	0.001	0.225	802

[a] NO_2 is calculated as $NO_x - NO$.

The average eight-mode and weighted NRTC emissions rates from Tables 11 and 12 are the key values for the verification test. **Tables 13 and 14** summarize that information. It is important to note that the baseline engine emissions in all categories are below the Table 4 threshold values for both the eight-mode tests and the NRTC.

Table 13. Summary of Verification Test Data (U.S. Common Units)

System Type	Fuel	Mean 8 Mode Emissions Value				
		PM	NO_x	HC	CO	CO_2
		g/bhp-hr				
Baseline	ULSD	0.257	5.13	0.190	1.65	558
Degreened	ULSD	0.226	1.56	0.002	0.130	576
Aged	ULSD	0.287	1.66	0.001	0.107	569
System Type	**Fuel**	**Weighted NRTC Emissions Value**				
		PM	**NO_x**	**HC**	**CO**	**CO_2**
		g/bhp-hr				
Baseline	ULSD	0.341	5.38	0.217	1.55	576
Degreened	ULSD	0.251	1.85	0.000	0.199	604
Aged	ULSD	0.240	1.89	0.000	0.168	598

Table 14. Summary of Verification Test Data (Metric Units)

System Type	Fuel	Mean 8 Mode Emissions Value				
		PM	NO_x	HC	CO	CO_2
		g/kWhr				
Baseline	ULSD	0.345	6.87	0.255	2.21	749
Degreened	ULSD	0.303	2.09	0.002	0.174	773
Aged	ULSD	0.385	2.23	0.002	0.143	763
System Type	**Fuel**	**Weighted NRTC Emissions Value**				
		PM	**NO_x**	**HC**	**CO**	**CO_2**
		g/kWhr				
Baseline	ULSD	0.457	7.22	0.291	2.08	773
Degreened	ULSD	0.337	2.47	0.000	0.266	810
Aged	ULSD	0.322	2.54	0.001	0.225	802

Table 15 summarizes the emissions reductions that were achieved by using the BlueMAX 100 Version A Urea-Based SCR System. These are the "verified emissions reductions" reported in Table 2 of the ETV Joint Verification Statement.

Table 15. Summary of Verification Test Emissions Reductions

Test Type	System Type	Fuel	Emissions Reduction (%)				95% Confidence Limits on the Emissions Reduction (%)			
			PM	NO_x	HC	CO	PM	NO_x	HC	CO
8-Mode	Degreened	ULSD	12	70	99	92	4.7 to 20	68 to 71	[b]	91 to 94
	Aged	ULSD	−12	68	99	94	[a]	64 to 71	[b]	92 to 95
NRTC	Degreened	ULSD	26	66	100	87	[c]	[c]	[c]	[c]
	Aged	ULSD	30	65	100	89	[c]	[c]	[c]	[c]

[a] The emissions reduction could not be distinguished from zero with 95% confidence.

[b] The emissions reduction could not be distinguished from 100% with 95% confidence.

[c] Confidence limits could not be determined for NRTC (Nonroad Transient Cycle) emissions reductions because replicate test runs were not performed.

In summary, the BlueMAX systems significantly decreased HC and CO emissions relative to the baseline engine. The BlueMAX systems decreased NO_x and NO_2 emissions in the eight-mode tests. For the NRTC tests, NO_x levels decreased, but NO_2 increased. There was also a notable increase in NO_2 emissions with the aged BlueMAX system after the urea pump was replaced. The degreened system exhibited a 4.7 to 20% reduction in PM emissions during the eight-mode tests, but the aged system's PM emissions could not be distinguished from the baseline case with 95% confidence. The aged system PM was strongly influenced by an increase in emissions during mode five of the eight-mode test. Ammonia slip levels in the exhaust downstream of the BlueMAX were generally less than 1 ppm, but some test modes and NRTC tests with the aged system had increased ammonia slip. The BlueMAX systems did not have any effect on fuel economy that can be stated with 95% confidence.

4.1 Quality Assurance

The ETV of the BlueMAX 100 Version A Urea-Based SCR System with ULSD fuel for heavy-duty nonroad diesel engines was performed in accordance with the approved Test/QA Plan and the test-specific addendum.[2] An audit of data quality included the review of equipment, procedures, record keeping, data validation, analysis, and reporting. Preliminary, in-process, and final inspections and a review of 10% of the data showed that the requirements stipulated in the Test/QA Plan[5] were achieved. The SwRI, APCT Center, and EPA quality managers reviewed the test results and the QC data and concluded that the Data Quality Objectives given in the generic verification protocol were attained. EPA and RTI QA staff conducted audits of SwRI's quality systems in April 2002 and technical systems in July 2009 and found no deficiencies that would adversely impact the quality of results at that time. The equipment was appropriate for the verification testing, and it was operating satisfactorily.

5.0 References

1. RTI International. 2003. *Generic Verification Protocol for Determination of Emissions Reductions from Selective Catalytic Reduction Control Technologies for Highway, Nonroad, and Stationary Use Diesel Engines.* Research Triangle Park, NC, September. Available at:

   http://www.epa.gov/etv/pubs/05_vp_emissions.pdf (accessed February 17, 2010).

2. RTI International. 2009. *Test-Specific Addendum to ETV Mobile Source Test/QA Plan for Nett Technologies for the BlueMAX™ 100 version A System.* Research Triangle Park, NC, June 8.

3. Southwest Research Institute. 2010. *ENVIRONMENTAL TECHNOLOGY VERIFICATION: BLUEMAX 100 VERSION A.* Final Report. San Antonio, TX, January.

4. Southwest Research Institute. 2010. *AUDIT OF DATA QUALITY for Environmental Technology Verification – BLUEMAX 100 VERSION A.* San Antonio, TX, January.

5. RTI International. 2006. *Test/QA Plan for the Verification Testing of Selective Catalytic Reduction Control Technologies for Highway, Nonroad, and Stationary Use Diesel Engines.* Research Triangle Park, NC, April. Available at:

   http://www.epa.gov/etv/pubs/600etv07039.pdf (accessed February 18, 2010).

6. 40 CFR, Part 89.330 (Protection of Environment: Control of Emissions from New and In-Use Nonroad Compression-Ignition Engines, Subpart D—Emission Test Equipment Provisions: Lubricating oil and test fuels). Available at:

   http://ecfr.gpoaccess.gov/cgi/t/text/text-idx?tpl=/ecfrbrowse/Title40/40tab_02.tpl (accessed February 17, 2010).

7. 40 CFR, Part 89 (Protection of Environment: Control of Emissions from New and In-Use Nonroad Compression-Ignition Engines), Subparts D and E. Available at:

   http://ecfr.gpoaccess.gov/cgi/t/text/text-idx?c=ecfr&sid=77577320d771be80f3fe23b1b1e8b62e&tpl=/ecfrbrowse/Title40/40cfr89_main_02.tpl (accessed February 17, 2010).

8. 40 CFR, Part 1039 (Protection of Environment: Control of Emissions from New and In-Use Nonroad Compression-Ignition Engines), Appendix VI. Available at: http://ecfr.gpoaccess.gov/cgi/t/text/text-idx?c=ecfr&sid=6fef682b617b8c80cc2a24bac445fbc1&rgn=div5&view=text&node=40:32.0.1.1.3&idno=40 (accessed February 17, 2010).

9. 40 CFR, Part 1039.510 (Protection of Environment: Control of Emissions from New and In-Use Nonroad Compression-Ignition Engines, Subpart F—Test Procedures: Which duty cycles do I use for transient testing?). Available at:

   http://ecfr.gpoaccess.gov/cgi/t/text/text-idx?c=ecfr&sid=6fef682b617b8c80cc2a24bac445fbc1&rgn=div5&view=text&node=40:32.0.1.1.3&idno=40 (accessed February 17, 2010).