STREAMS TO 61/ETV Program Water Quality Protection Center

TEST PLAN FOR VERIFICATION OF SSCI GROUT FOR INFRASTRUCTURE REHABILITATION

Original signed by Chuck Slack

Mr. Chuck Slack
Separation Systems Consultants, Inc.
Primary Contact
Phone: 281-797-2713
Fax: 281-486-7415

Original signed by C. Vipulanandan

Dr. C. Vipulanandan
University of Houston - CIGMAT
Project Manager
Phone: 713-743-4278
Fax: 713-743-4260

Original signed by Thomas Stevens

Thomas Stevens
NSF International
Project Manager, WQPC Center
Phone: 734-769-5347
Fax: 734-769-5195

Original signed by Raymond Frederick

Raymond Frederick
U.S. EPA
Project Officer, WQPC Center
Phone: 732-321-6627
Fax: 732-321-6640

Original signed by Richard Marinshaw

Richard Marinshaw
RTI International
Project Manager,
Phone: 919-316-3735
Fax: 919-316-3420

TEST PLAN FOR VERIFICATION OF SSCI GROUT FOR INFRASTRUCTURE REHABILITATION

Prepared for:

RTI International
P.O. Box 12194
Research Triangle Park, NC 27709-2194

and

NSF International
P.O. box 130140
Ann Arbor, MI 48113-0140

With support from the
U.S. Environmental Protection Agency

Prepared by:

C. Vipulanandan, Ph.D., P.E.
Center for Innovative Grouting Materials and Technology (CIGMAT)
University of Houston
Houston, TX 77204-4003
713-743-4278

Foreword

Starting in Fiscal Year 2007, the U.S. Environmental Protection Agency's (EPA) Office of Research and Development (ORD) has been supporting a new research program to generate the science and engineering to improve and evaluate promising innovative technologies and techniques to reduce the cost and improve the effectiveness of operation, maintenance, and replacement of aging and failing drinking water and wastewater treatment and conveyance systems. This research program directly supports the Agency's Sustainable Water Infrastructure Initiative (www.epa.gov/waterinfrastructure).

The outputs from this program will assist EPA's program and regional offices, states and tribes to meet their programmatic requirements and utilities to more effectively implement comprehensive asset management, provide reliable service to their customers, and meet their Clean Water Act and Safe Drinking Water Act requirements.

The plan proposes, in part, work relating to demonstration and verification of condition assessment, system rehabilitation, advanced concepts and innovative treatment technologies. Proposed activities to be conducted as part of this task order address the field verification of condition assessment and rehabilitation technologies for drinking water distribution systems and wastewater collection systems.

Condition assessment encompasses the collection of data and information through direct inspection, observation and investigation and in-direct monitoring and reporting (soil conditions and historical data), and the analysis of the data and information to make a determination of the structural, operational and performance status of capital infrastructure assets. Research issues in this area relate to the collection of reliable data and information and the ability of utilities to make technically sound judgments as to the condition of their assets. Condition assessment also includes the practice of failure analysis which seeks to determine the causes of infrastructure failures in order to prevent future failures.

System rehabilitation is the application of infrastructure repair, renewal and replacement technologies in an effort to return functionality to a drinking water or wastewater system or sub-system. The decision-making process for determining the proper balance of repair, renewal and replacement is a function of the condition assessment, the life-cycle cost of the various rehabilitation options, and the related risk reductions.

Acknowledgements

EPA and NSF International acknowledge those persons who participated in the preparation, review and approval of the protocol that provided the basis for this Test Plan. Without their hard work and dedication to the project, this document would not have been approved through the process that has been set forth for this ETV project.

Author:

Dr. C. Vipulanandan, Director of CIGMAT – Center for Innovative Grouting Materials and Technology, University of Houston

Technical Panel Reviewers:

J. Jeffery Fordice, P.E.
Assistant City Engineer
City of Saline, Michigan

Ahmad Habibian, Ph.D., P.E.
Black & Veatch

Phil Hannan, P.E.
Black & Veatch

Steve Henning
Avanti International

Table of Contents

Foreword **3**
Table of Contents **5**
Acronyms **8**
Glossary of Terms **9**
1.1 Background (University of Houston Study) 11
1.2 Technical Approach 11
1.3 Test Plan Schedule and Milestones 11
1.4 Roles and Responsibilities 12
1.4.1 Verification Organization (VO – RTI International and NSF International) 12
1.4.2 U.S. Environmental Protection Agency (EPA) 12
1.4.3 Technology Panel 13
1.4.4 Testing Organization (TO – CIGMAT Laboratories at UH) 13
1.4.5 Vendor (Separation Systems Consultants, Inc.) 14
2 Test Facility **15**
3 Experimental Design **16**
3.1 Grout Evaluation 16
3.1.1 Grout Specimen Preparation 19
3.1.1.1 Grout Specimens 19
3.1.2 Grout Curing Properties 20
3.1.2.1 Viscosity 20
3.1.2.2 Setting (Gel) Time 20
3.1.3 Physical and Mechanical Properties 20
3.1.3.1 Unit Weight (Density) 20
3.1.3.2 Water Absorption 20
3.1.3.3 Shrinkage 21
3.1.3.4 Permeability 21
3.1.3.5 Unconfined Compressive Strength and Stress/Strain Relationship 21
3.1.3.6 Tension Tests 22
3.1.4 Durability Properties 22
3.1.4.1 Wet/Dry Cycle 22
3.1.4.2 Chemical Resistance 22
3.1.5 Environmental Properties—Leaching Test 23
3.2 Grout–Substrate Bonding Strength 23
3.2.1 Cylinder Bonding (CIGMAT GR 5-00) 24
3.2.2 Concrete Prism Bonding (CIGMAT CT 3-00) 24
3.2.3 Wet/Dry Cycle 24
3.3 Model Tests 24
3.3.1 Model Test 4: Concrete Leak Repair 24
3.3.2 Model Test Procedures 26
4 Sampling and Analytical Procedures **27**
5 Quality Assurance Plan **28**
5.1 Quality Assurance Responsibilities 28
5.2 Data Quality Indicators 28
5.2.1 Representativeness 28

5.2.2 Completeness 29
5.2.3 Precision 29
5.2.4 Accuracy 30
5.2.5 Measurements 31
5.2.6 Analytical Quality Control 31
6 Data Reporting, Data Reduction, and Data Validation 32
6.1 Data Documentation 32
6.2 Data Reduction 32
6.3 Data Validation 32
6.4 Verification Report 33
7 Assessments 34
7.1 Audit Reports 34
7.2 Corrective Action Plan 34
8 Safety Considerations 35
9 References 36

Figures

Figure 3-1. Typical molds used for preparing grout specimens. 19
Figure 3-2. Model configuration for testing concrete leak repair (Model Test 4). 25

Tables

Table 3-1. Grout Tests for Concrete Repair for Leak Control 17
Table 3-2. Grout–Substrate Interaction Tests 18
Table 3-3. Shrinkage Test Conditions 21
Table 4-1. Handling Methods and Analyses for Collected Samples 27
Table 4-2. Scheduled Instrument QC Checks and Corrective Actions for Analytical Methods .. 27
Table 5-1. Summary of Analytical Accuracy and Precision Limits 31

Acronyms

ASTM	ASTM International
CIGMAT	Center for Innovative Grouting Materials and Technology
EPA	United States Environmental Protection Agency
ETV	Environmental Technology Verification
NSF	NSF International
ORD	Office of Research and Development
QA	quality assurance
T/QAP	Test/quality assurance plan
QC	quality control
RTI	RTI International
TO	Testing organization
UH	University of Houston
VO	Verification organization
WQPC	Water Quality Protection Center

Glossary of Terms

Accuracy—A measure of the closeness of an individual measurement or the average of a number of measurements to the true value and includes random error and systematic error.

Batch—The number of samples analyzed during a period in which an instrument was operated continuously.

Bias—The systematic or persistent distortion of a measurement process that causes errors in one direction.

Comparability—A qualitative term that expresses confidence that two data sets can contribute to a common analysis and interpolation.

Completeness—A qualitative term that expresses confidence that all necessary data have been included.

Precision—A measure of the agreement between replicate measurements of the same property made under similar conditions.

Representativeness—A measure of the degree to which data accurately and precisely reflect a characteristic of a population parameter at a sampling point, or for a process or environmental condition.

Room Temperature—23ºC ±2ºC and relative humidity of 50% ±5%. This definition of room temperature shall be used for all testing even if a referenced SOP or standard defines the term differently.

Standard Operating Procedure—A written document containing specific procedures and protocols to ensure that quality assurance requirements are maintained.

STREAMS – The Scientific, Technical, Research, Engineering and Modeling Support (STREAMS) contract by the U.S. Environmental Protection Agency's Office of Research and Development (ORD).

Technology Panel—A group of individuals with expertise and knowledge in grouts.

Test Plan—A written document that describes the procedures for conducting an evaluation for the application of a grout material; the quality assurance project plan is an important part of the test plan.

Test/Quality Assurance Plan—A written document that describes the implementation of quality assurance and quality control activities during the life cycle of the project.

Verification—To establish the evidence on the performance of grouts under specific conditions, following a predetermined test plan.

Verification Report—A written document containing all raw and analyzed data, all QA/QC data sheets, descriptions of all collected data, a detailed description of all procedures and methods used in the verification testing, and all QA/QC results. The test plan shall be included as part of this document.

Verification Statement—A document that summarizes the verification report reviewed and approve by the Verification Organization and EPA.

1 INTRODUCTION

1.1 Background (University of Houston Study)

University of Houston (UH)/CIGMAT researchers have been investigating the performance of various grouts for use in wastewater facilities for over two decades. Grouts can be used for controlling leaks in the wastewater facilities and repairing the cracked concrete. The CIGMAT studies have been focused on (1) testing and characterizing the flow properties and setting time of cement and polymer grouts, (2) behavior under various chemical exposure, and (3) bonding strength of concrete repairing grout materials.

1.2 Technical Approach

The overall objective of this test plan is to develop a testing program to systematically evaluate grouts for controlling infiltration to wastewater systems and leaks in concrete structures. Specific test plan objectives are to:

- Evaluate properties (working, physical, mechanical, durability, and leaching) of grouts;
- Characterize the bonding properties of the grout-substrate interaction; and
- Verify the performance of grouted joints and repaired concrete cracks under hydrostatic pressure up to 5 psi (about 10 feet of water) and wet/dry cycles over a period of one month.

Testing will use relevant ASTM and CIGMAT standards. A total of 10 different tests will characterize the grouts (Table 3-1), and several additional tests will evaluate grout-substrate interaction (Table 3-2). Model test will be used to evaluate grout effectiveness for concrete repair for leak control. All CIGMAT standard methods referenced herein are included in Appendix A.

1.3 Test Plan Schedule and Milestones

The tests described herein will be completed within six months from the start date. The data will be compiled and summarized in a report to RTI International within two months of the conclusion of testing.

CIGMAT will meet the following approximate schedule:

Activity	Months after Project Initiation
Submit draft test plans to RTI and NSF	1
Approve test plans	2
Initiate testing	3
Complete testing	9
Submit draft report, with data to RTI and NSF	11
Address comments, complete final report	13

1.4 Roles and Responsibilities

This section defines the participants in this technology verification and their roles and responsibilities.

1.4.1 Verification Organization (VO – RTI International and NSF International)

- Coordinate with CIGMAT, the Testing Organization (TO), and the Vendor to prepare and approve a product-specific test plan;
- Coordinate with the ETV Grouting Technical Panel, as needed, to review the product-specific test plan prior to the initiation of verification testing;
- Coordinate with the EPA Water Quality Protection Center (WQPC) Project Officer to approve the product-specific test plan prior to the initiation of verification testing;
- Review the quality systems of the TO and qualify the TO to complete the testing;
- Oversee the grouts evaluations and associated laboratory testing;
- Review data generated during verification testing;
- Oversee the development of a verification report and verification statement;
- Print and distribute the verification report and verification statement; and
- Provide quality assurance oversight at all stages of the verification process.

Primary contacts: Mr. Richard Marinshaw
RTI International
3040 Cornwallis Road
Research Triangle Park, NC 27709
Phone: 919-316-3735
Email: rjmarinshaw@rti.org

Mr. Thomas Stevens
NSF International
789 North Dixboro Road
Ann Arbor, MI 48105
Phone: 734-769-5347
Email: stevenst@nsf.org

1.4.2 U.S. Environmental Protection Agency (EPA)

This test plan has been developed with financial and quality assurance assistance from the US EPA through a STREAMS contract, and through the ETV and WQPC Programs, all of which are overseen by the EPA's Office of Research and Development (ORD), National Risk Management Research Laboratory – Urban Watershed Management Branch (NRMRL-UWMB) in Edison, NJ. The NRMRL-UWMB Quality Assurance Manager and the EPASTREAMS/WQPC Project Officer will provide administrative, technical, and quality assurance guidance and oversight on all STREAMS and ETV WQPC activities, and will review and approve each phase of the verification project. The primary responsibilities of EPA personnel are to:

- Review and approve test plans;
- Sign the test plan signoff sheet;
- Review and approve the verification report and verification statement; and
- Post the verification report and verification statement on the EPA ETV website.

Primary contact: Mr. Ray Frederick
U.S. Environmental Protection Agency, NRMRL
Project Officer, Water Quality Protection Center
2890 Woodbridge Ave. (MS-104)
Edison, New Jersey 08837
Phone: 732-321-6627
Email: frederick.ray@epamail.epa.gov

1.4.3 Technology Panel

A Technology Panel was formed to assist with the review of the grouting test plan. Input from the panel ensures that data generated during verification testing are relevant and that the method of evaluating different technologies is fair and consistent. All product-specific grout test plans may be subject to review by representatives of the Technology Panel.

1.4.4 Testing Organization (TO – CIGMAT Laboratories at UH)

The TO for verifications conducted under this test plan is CIGMAT Laboratories at the University of Houston. The primary responsibilities of the TO are:

- Coordinate with the VO and Vendor relative to preparing and finalizing the test plan;
- Sign the test plan signoff sheet;
- Conduct the technology verification in accordance with the test plan, with oversight by the VO;
- Analyze all samples collected during the technology verification process, in accordance with the procedures outlined in the test plan and referenced SOPs;
- Coordinate with and report to the VO during the technology verification process;
- Provide analytical results of the technology verification to the VO; and
- If necessary, document changes in plans for testing and analysis, and notify the VO of any and all such changes before changes are executed.

CIGMAT supports faculty, research fellows, research assistants and technicians. The CIGMAT personnel will work in groups to complete the tests described in this test plan. All the personnel report to the Group Leader and the CIGMAT Director. The CIGMAT Director is responsible for appointing Group Leaders, who, with his approval, are responsible for drawing up the schedule for testing. Additionally, a Quality Assurance (QA) Engineer, who is independent of the testing program, will be responsible for internal audits.

Primary contact: Dr. C. Vipulanandan
University of Houston, CIGMAT
4800 Calhoun

Houston, Texas 77204-4003
Phone: 713-743-4278
Email: cvipulanandan@uh.edu

1.4.5 Vendor (Separation Systems Consultants, Inc.)

- Provide the TO with pre-grout samples for verification;
- Complete a product data sheet prior to testing (refer to Appendix B);
- Apply grout, as described in this test plan, for the model tests; and
- Provide technical assistance to the TO during verification testing period as requested.

Primary contact: Mr. Chuck Slack
Separation Systems Consultants, Inc.
17041 El Camino Real, Suite 200
Houston, TX 77058
Phone: 281-797-2713
Email: cslack@sscienvironmental.com

2 TEST FACILITY

The testing will be performed in the CIGMAT Laboratories at the University of Houston, Houston, Texas. The CIGMAT Laboratories are located in the Central Campus of UH at 4800 Calhoun Road (off interstate highway I-45 South toward Galveston).

The CIGMAT laboratories and affiliated facilities are equipped with devices that can perform all of the grouting tests in this test plan. Molds are available to prepare the specimens for testing, and all the grout and grout-substrate interaction test procedures are documented in standard operating procedures.

3 EXPERIMENTAL DESIGN

This testing program for grouting materials will evaluate the performance and characteristics of grouts in three different testing phases:

- The physical properties of the grout will be tested by utilizing test specimens created by the TO;
- The interaction of the grout and substrate will be tested by TO application of the grout to test substrate material (concrete) and completion of a series of performance tests; and
- Model tests, where grout applied by the Vendor to a laboratory-simulated concrete crack and tests are conducted to evaluate the grout for leak control.

Testing details are provided in the following sections.

3.1 Grout Evaluation

Properties of the neat resin (unsolidified grout) and grout specimen samples to be tested can be grouped as:

- Working properties (resin/grout mix);
- Physical and mechanical properties (grout specimens);
- Durability properties (grout specimens); and
- Leachability (grout specimens).

The properties to be tested are summarized in Tables 3-1 and 3-2. The physical property evaluation tests consist of making grout specimens, subjecting the specimens to a particular test, and measuring the results. For tests where the procedures have been developed by the American Society of Testing and Materials (ASTM), the ASTM test procedure will be used. Where no ASTM test procedures exist, CIGMAT has developed testing protocols that will be used. Where applicable, the ASTM and CIGMAT testing procedures are referenced in the following sections. The CIGMAT procedures are included in Appendix A of this protocol.

Table 3-1. Grout Tests for Concrete Repair for Leak Control

Properties Tests		Conditions	Test Method to be Used	Leak Control Application Concrete Repair	Number of Specimens or Tests
Working Properties	Viscosity	Room temperature	CIGMAT GR 6-02	X	3
	Setting (Gel) Time	Room temperature	ASTM C 191-04 (cement-based) or method defined in 3.1.2.1.2 (chem.)	X	6
Physical and Mechanical Properties	Unit Weight	Room temperature	CIGMAT GR 1-00	X	3
	Water Absorption	Room temperature	CIGMAT GR 3-00	X	3
	Shrinkage	23ºC±2ºC, 90%±5% RH	Method defined in 3.1.3.3	X	3
	Permeability	Water	CIGMAT GR 7-02	X	3
	Compressive Strength	3, 7, 28 days	CIGMAT GR 2-02	X	9
Durability Properties	Wet-Dry Cycle	Number of cycles	CIGMAT GR 3-00	X	3
	Chemical Resistance	pH = 2, 7, 10	CIGMAT CH 2-01	X	9
Environmental Properties	Leaching	Water	Method defined in 3.1.5	X	3

Table 3-2. Grout–Substrate Interaction Tests

Materials	Tests	Conditions	Test Method to be Used	Leak Control Applications Concrete Repair	Number of Tests
GROUT-SUBSTRATE INTERACTION					
Bonding	Wet condition	Concrete, cured under water	CIGMAT GR 5-00 or CIGMAT CT 3-00	X	12
Strength	Wet-dry cycle	Number of cycles	CIGMAT GR 3-00	X	3

3.1.1 Grout Specimen Preparation

3.1.1.1 Grout Specimens

Figure 3-1 shows the molds that will be utilized to make the test specimens based on the type of grout. After solidification, specimens shall be removed from the mold and stored in labeled, sealed plastic bags for identification, protection, and to prevent moisture loss. Specimens to be cured under water shall be completely submerged in a water bath of tap water at room temperature. If the specimen floats, a small amount of force will be applied to keep it submerged. The specimens shall be stored in a temperature- and humidity-controlled room at 23 ± 2°C (room temperature) and 50% ± 5% humidity.

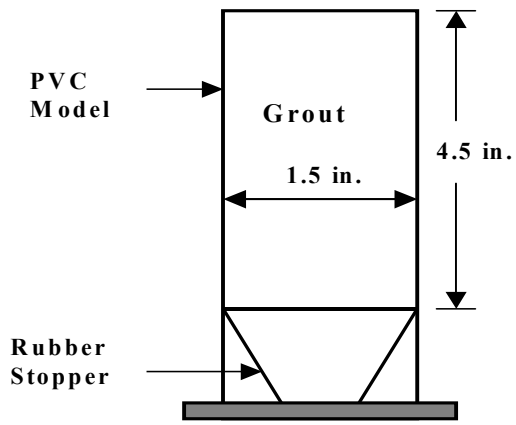

(a) Chemical/Cement Grouts

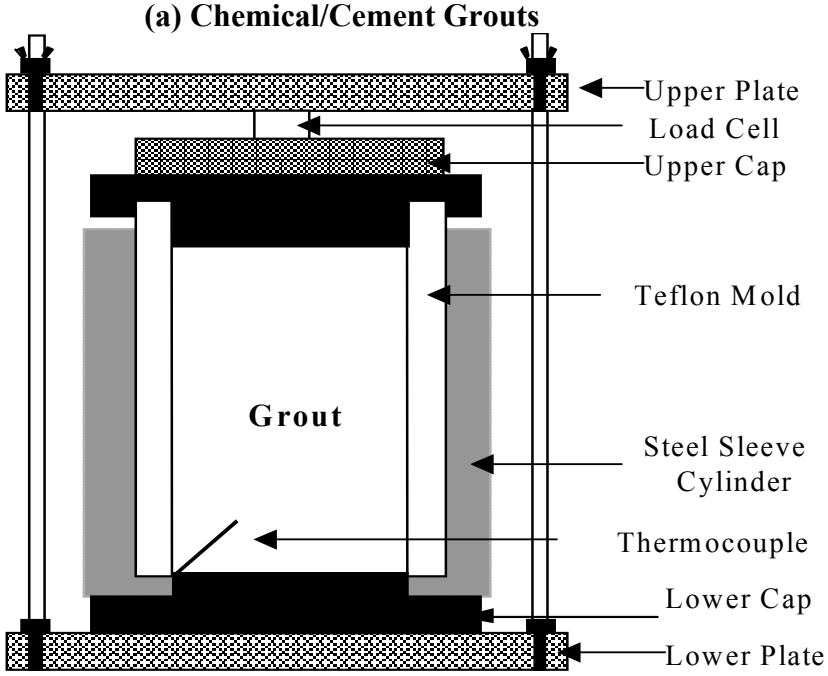

(b) Polyurethane Grouts

Figure 3-1. Typical molds used for preparing grout specimens.

3.1.2 Grout Curing Properties

3.1.2.1 Viscosity

Grout viscosity will be evaluated using the procedures described in this section. Grout viscosity will be evaluated using a procedure outlined in CIGMAT GR 6-02. Using a cylindrical spindle-type viscometer (Brookfield Viscometer with 8 speeds, LVT model with four spindles or equivalent), the initial viscosity and changes in viscosity during the gelling process shall be measured at room temperature at selected strain rates (up to 180 sec^{-1}). The specific strain rates at which viscosity will be measured shall be determined in advance of testing by the TO, with the consent of the vendor. Once the material performs consistently at different viscometer speeds, the test shall be complete. A minimum of three replicate tests shall be conducted.

3.1.2.2 Setting (Gel) Time

Grout setting or gel time will be evaluated using the procedures described in this section. The gel time for the grouts shall be determined by the elapsed time from grout preparation until the grout no longer flows from a plastic cup or beaker inclined slowly (so that if the cup/beaker were filled with liquid, the surface of the liquid would remain level) to 45º. Approximately 50 mL of freshly prepared grout shall be poured into a container. The analyst shall tilt the cup to 45º to horizontal and record the time for the grout to gel, as indicated by it no longer exhibiting liquid flow properties and no longer flows from the container. A total of six replicates of each grout shall be analyzed.

3.1.3 Physical and Mechanical Properties

To obtain initial characterization information on the grout specimens, all specimens shall be weighed to 0.1 g using a calibrated digital balance and measured (diameter and height) using a vernier caliper with a least count of 0.1 mm. Measurements shall be taken at the top, middle, and bottom of the specimen, with two measurements taken at 90 degrees from each other at each location to obtain consistent data.

3.1.3.1 Unit Weight (Density)

Solidified grout specimens shall be used to determine the unit weight (density) of the grout. The determination shall be completed per CIGMAT GR 1-00 for both grout and grouted sand specimens. Unit weight shall be calculated using the weight and volume of the specimens. A minimum of three replicates will be evaluated for unit weight. Based on the unit weight, the grout shall be reported as lighter or heavier than water.

3.1.3.2 Water Absorption

Water absorption characteristics shall be evaluated on grout specimens as outlined in standard procedure CIGMAT 3-00. A minimum of three solidified grout specimens shall be immersed in tap water (initial pH in the range of 7 to 8) and changes in weight and volume (determined by

measuring specimen diameter and height) of the specimens shall be recorded a minimum of once every working day (Monday through Friday, excluding holidays) until the changes in weight and volume become negligible (less than 0.5 percent of the previous weight and volume), or for one week, whichever occurs first. The report for this testing shall include the time of immersion, the initial characteristics of the specimens, the weight and volume change with time, water absorption as a percentage of the initial weight, and volume of grout.

3.1.3.3 Shrinkage

The Vendor selected 23ºC for this test to be completed, representing a climate between the extremes indicated in the Protocol (10ºC and 27ºC). At the onset of the test, specimens shall be prepared in a mold with inner dimensions of 1.5 in. (38 mm) in diameter and 3.5 in. (90 mm) in length. Three specimens shall be tested under the selected test conditions. The specimens shall be placed in zip lock bags and kept at conditions indicated in Table 3-3. Humidity will be measured using a digital humidity meter. The weight and dimensions of the specimens shall be reported before and after 28 days of conditioning.

Table 3-3. Shrinkage Test Conditions

Parts	Temperature, Duration, and Storage Condition
Part C	23ºC ± 2ºC for 28 days in zip lock bags (RH = 90%± 5%)

3.1.3.4 Permeability

Solidified grout specimens shall be used to determine their permeability. Specimens shall be prepared in 1.5-in. diameter Plexiglas/glass cylinders and permeated with water under a hydraulic gradient of 100, per CIGMAT GR 7-02. Testing shall be completed at room temperature and humidity. A minimum of three replicate tests shall be run on the grout specimens. The report for this testing shall include the temperature and humidity at which testing was completed, any changes in the specimens during the testing, and the permeability obtained during the testing.

3.1.3.5 Unconfined Compressive Strength and Stress/Strain Relationship

CIGMAT GR 2-02 has been developed for testing grouts in compression under monotonically increasing load (load increasing linearly). Compression tests shall be performed using screw-type machines with capacities up to 5,000 lbs. Specimens shall be loaded at specified rates based on the type of grout and the loading rate may be determined based on trial tests conducted outside of this testing. Specimens shall be tested in duplicates at intervals of 3 and 28 days following specimen preparation, as described in CIGMAT GR 2-02. The reported data shall include compressive strength, modulus and failure strain, where the modulus is determined from the initial slope of the stress/strain relationship and the failure strain is the maximum loading point before the specimen fails.

3.1.3.6 Tension Tests

The tension test indicated in the Protocol will not be completed during this verification, as the bonding test (described in Section 3.2) will provide the information regarding the grout's ability to withstand tensile loading. The key performance indicator for the grout material under tension is to show it does not fail before the bond with the substrate, which will be determined during the bonding test.

3.1.4 Durability Properties

3.1.4.1 Wet/Dry Cycle

During its service life, the grout could be subjected to a number of wet/dry cycles. This test is designed to determine the impact of repeated wetting and drying on the performance of grouts. A minimum of three replicate specimens shall be used for this test. The specimens shall be subjected to 10 wet/dry cycles for a total test time of 140 days, or until failure (unconsolidation). One wet/dry cycle shall be 14 days in duration, consisting of 7 days of water exposure followed by 7 days of dry conditions at room temperature and humidity (23 ± 2°C and 50% ± 5% RH). The water exposures shall be completed as described in Section 11 of CIGMAT GR 3-00, using tap water having a pH between 7 and 8. Changes in length, diameter, weight, and volume of the specimens shall be measured daily per Sections 9 and 11 of CIGMAT GR 3-00. At the end of the 10-wet/dry cycles, specimens shall be tested to determine the compressive strengths of the grout, as described in sections 3.1.3.5. The reported data shall include weight and dimension data collected for the specimens, as well as the data to be reported described in sections 3.1.3.5.

3.1.4.2 Chemical Resistance

This test will evaluate the resistance of grouts when exposed to chemical conditions representing various sand and groundwater environments. The test results will help when selecting suitable grouts for use in various chemical environments. Cylindrical grout specimens shall be prepared as described in Section 3.1.1.1, and the initial weight, dimensions, color, and surface appearance of the specimens shall be recorded. Three specimens at each pH shall be fully immersed in solutions with pH 2, 7, and 10 maintained at room temperature (23 ± 2°C) for the entire exposure period. The solutions shall consist of tap water with hydrochloric acid or sodium hydroxide added to achieve the pH required for the tests. The weight, volume, color, and surface appearance of the specimens shall be determined and recorded for three specimens at each pH after 30, 90, and 180 days, as described in Section 7.3 in CIGMAT CH 2-01. The pH, clarity, and color of the exposure solution shall also be recorded at each evaluation time. During the evaluation, if the pH changes by more than ± 2 units, additional hydrochloric acid or sodium hydroxide shall be added to the solution to return it to its original pH. The analyst shall note in the project logbook the quantity of chemical and revised pH during each adjustment. After each evaluation, compression testing shall be completed for the specimens in accordance with Section 7.4 of CIGMAT CH 2-01. All data and observations shall be reported, along with the calculations described in sections 8.1, 8.3, and 8.4 of CIGMAT CH 2-01. The appearance of specimens and immersion solutions shall be reported as described in sections 9.2 and 9.3 of CIGMAT CH 2-01.

3.1.5 Environmental Properties—Leaching Test

Potential contaminant leaching from solidified grout shall be determined by analyzing water exposed to the grout. The protocol calls for analysis of the exposure water for total organic carbon (TOC) and lead. Lead is an issue only with inorganic materials, which is not the case with the polyurethane grout in this test. Subsequently, the exposure water will be evaluated only for TOC. A minimum of three test replicates, using cylindrical grout specimens, will be prepared as described in Section 3.1.1.1. The specimens will be immersed in three individual exposure jars, each containing tap water (pH = 8 ± 0.5; TOC < 1 mg/L). One blank container containing only the exposure water shall be prepared and held under the same conditions as the specimen exposure jars. The exposure jars and blank jar will be held at room temperature for seven days.

The test shall be conducted with grout specimens and water volume so that there is an adequate volume of exposure water to conduct the required analyses. A liquid-to-solid ratio of 1:1 (by volume) will be used*)*. If a different liquid-to-solid ratio is used, it shall be reported in the verification report.

At the beginning and end of the exposure period, samples of the exposure water will be analyzed to determine the presence of organic compounds that have leached from the grout. The samples will be analyzed for TOC.

The water in the blank container shall be sampled at the beginning and end of the exposure period, and analyzed for the same constituents as the grout specimen exposure water. This will provide a baseline concentration of constituents in the tap water.

Details of the analytical methods, required sample volumes, and sample holding are provided in Section 4.

3.2 Grout–Substrate Bonding Strength

Interaction between the grout and a concrete substrate shall be evaluated by testing the bonding strength and type of failure (bonding failure, substrate failure, or a combination) under different service conditions, as specified in sections 3.2.1 through 3.2.3. Testing of wet grout/concrete substrate specimens shall be conducted over a period of six months in accordance with CIGMAT GR 5-00 (where two cylinders are bonded with grout) or CIGMAT CT 3-00 (where the area between concrete prisms is grouted), as selected by the vendor prior to the ETV verification. In addition, bonded configurations prepared according to either CIGMAT GR 5-00 or CIGMAT CT 3-00 shall be subjected to wet/dry cycle testing, as described in Section 3.1.4.1.

3.2.1 Cylinder Bonding (CIGMAT GR 5-00)

This test configuration may be used to determine the bonding strength of various grout materials (15,23). The test consists of sandwiching a layer of grout between flat surfaces of concrete (the ends of concrete cylinders) and then loading the test specimen in tension. Details of specimen preparation are in CIGMAT GR 5-00. The Grout-Rock Test outlined in Section 7.2 of CIGMAT GR 5-00 will not be conducted as part of this testing. The reported data shall include all collected data, the bonding strength, and the type of bonding failure.

3.2.2 Concrete Prism Bonding (CIGMAT CT 3-00)

Although CIGMAT CT 3-00 was developed for coating materials, it may be adopted for grouts. As described in CIGMAT CT 3-00, the grout shall be sandwiched between a pair of rectangular concrete prism specimens and then tested for bonding strength and type of failure. Even though CIGMAT CT 3-00 specifies the use of dry prisms, for the purposes of ETV testing, wet specimens shall be used to simulate extreme grouting conditions. The bonded wet specimens shall be immersed in water until testing begins. The reported data shall include the number of specimens tested, age of specimen at time of test, average bond strength, standard deviation and type of failure.

3.2.3 Wet/Dry Cycle

During its service life, a grouted concrete joint could be subjected to a number of wet/dry cycles. Hence, each bonded configuration will be tested for performance by subjecting it to 10 wet and dry cycles, where one wet/dry cycle takes 14 days, for a total test time of 140 days, or until failure. Following the wet/dry cycles, a minimum of three test specimens shall be retested to determine the bonding strength, following methods in Section 3.2.2.

3.3 Model Tests

The model test is to simulate field conditions. Vendor has selected Model Test 4 for Concrete Repair for this verification.

3.3.1 Model Test 4: Concrete Leak Repair

In order to simulate a leak in a concrete structure, this model test (Figure 3-2) shall use 10 in (25 cm) diameter circular concrete disks with 6 in (15 cm) openings at the center (so that each disk is donut shaped). As a default, the two disks shall be placed 1 inch apart and grouted by the vendor. The vendor may, however, select the opening size. The grouted joint shall be subjected to hydrostatic pressure testing to determine the leak rate, as detailed in 3.3.5.

Procedure for preparing the concrete leak repair joint for Model Test 4:

- The gap between the concrete rings on the testing rig shall be one inch.
- The vendor shall apply the grout in the gap in accordance with the vendor's standard procedures.

- After the grout has cured, testing will commence using the procedures outlined in Section 3.3.5.

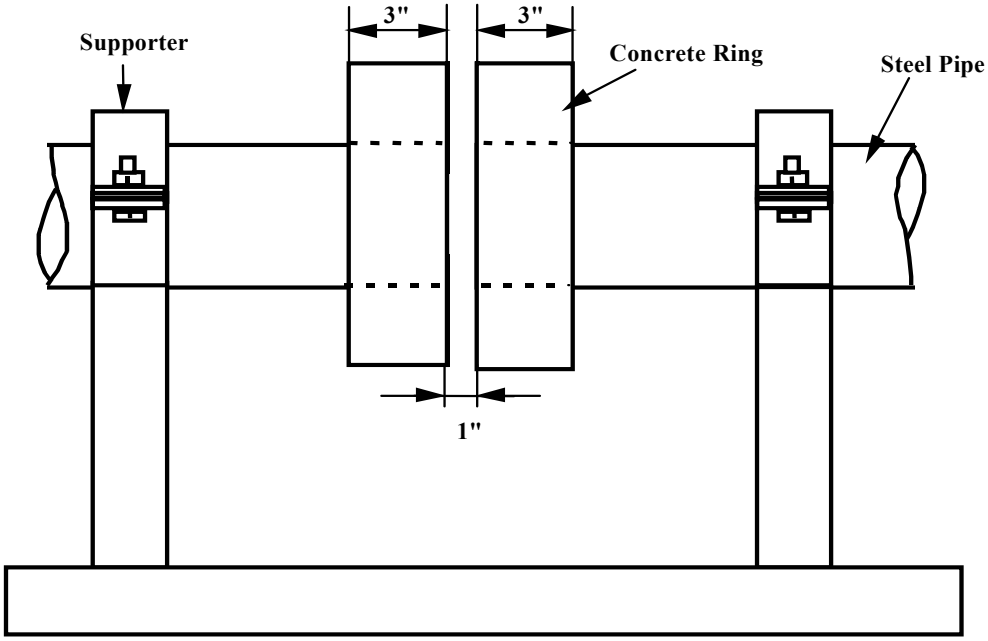

a) Elevation View

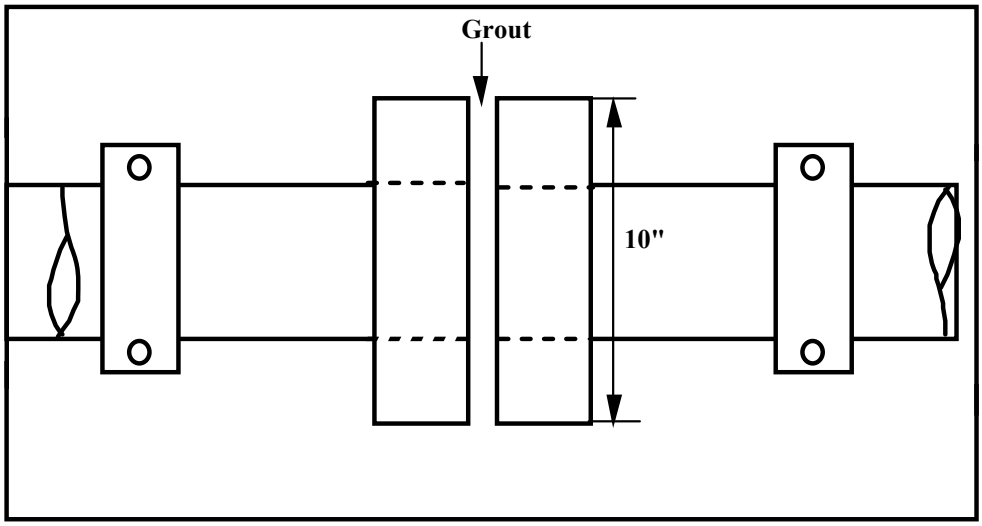

b) Plan View

Figure 3-2. Model configuration for testing concrete leak repair (Model Test 4).

3.3.2 Model Test Procedures

The testing procedure will be conducted in duplicate. The grout shall be applied by the vendor. CIGMAT personnel shall supervise the grouting procedures and pictures shall be taken of the joint/concrete disks prior to and after grouting. The time elapsed and volume of grout used during the grouting process shall be recorded. During the grouting of the simulated crack, at least ten grout samples shall be collected to test the setting time (Section 3.1.2.2), unit weight (Section 3.1.3.1), and compressive properties (Section 3.1.3.5) of the grouts. These analyses are in addition to those specified in Section 3.1.

Once the grouted crack is cured per the manufacturer's instructions, they shall be subjected to the following regimen:

1. Apply hydrostatic pressure of 3 psi and hold for 5 minutes; then measure the leak rate using a graduated cylinder and a stopwatch.
2. Repeat Step 1 at a hydrostatic pressure of 4 psi.
3. Repeat Step 1 at a hydrostatic pressure of 5 psi.
4. Maintain saturated conditions for a period of one week. In model test 4, soak the joint with water for a week.
5. Drain all water from the test chambers and allow them to stand for one week.
6. Repeat Step 4.
7. Repeat Step 5.
8. Determine leak rates as described in steps 1 through 3 after a month of test.

4 SAMPLING AND ANALYTICAL PROCEDURES

Verification of grouts under ETV primarily consists of physical tests performed on prepared specimens as described in Chapter 3, "Experimental Design." The outlined procedures identify the sampling locations and frequency required for each test.

Further sample preparation and analysis is required only for the leaching test, which is outlined in Section 3.1.5. Exposure water samples will be collected and analyzed for TOC. Other analyses may be conducted based on the chemical composition of the tested grout. The exposure water samples shall be representative grab samples collected from the exposure jar.

The sample handling, analysis and reporting shall be as outlined in Table 4-1.

Table 4-1. Handling Methods and Analyses for Collected Samples

Analysis Method	[1]	Bottle Type and Size	Preservation, Holding Time	Reporting Detection Limit
TOC	SM 5310 (B or C)	Glass, two 40-mL bottles	Cool to 4ºC, pH<2 HNO_3, six months	1 mg/L

[1] *Standard Methods for the Examination of Water and Wastewater,* 20th Edition.

Samples shall be delivered to the analytical laboratory following appropriate chain of custody procedures, including use of chain of custody forms. Samples shall be logged in and refrigerated by the laboratory, as described in Table 4-1.

Table 4-2 describes the specific QC checks required for the analytical methods for TOC used in this project. These checks shall determine when corrective action is needed.

Table 4-2. Scheduled Instrument QC Checks and Corrective Actions for Analytical Methods

QC Procedure	Frequency	Acceptance Criteria	Corrective Action
Calibration curve	Every batch	±10% of known sample	Find cause, repair, rerun before sample analysis
Analyze standard	Every batch	±10% of known sample	Find cause, repair, rerun before sample analysis
Matrix spike	Every batch	80–120% recovery of spike	Find cause, repair, rerun previous samples
Analyze blank (deionized water)	Every batch	Not to exceed detection level.	Find cause, repair, rerun before sample analysis

5 QUALITY ASSURANCE PLAN

This section specifies procedures that shall be used to ensure data quality and integrity arising from the testing. Careful adherence to these procedures will ensure that the data generated from the testing will provide sound analytical results that will indicate the true performance of the grout, and form the basis for the report on the testing.

5.1 Quality Assurance Responsibilities

The TO, in preparing the test plan, shall be responsible for ensuring that the test plan and the QAPP properly implement the requirements of this test plan. The VO is responsible for review of the test plan to assure that all elements required by this test plan are properly addressed.

During testing, the TO shall be responsible for assuring that the elements contained in the test plan are complied with. Written or electronic records shall be maintained for calibrations, sample collection, and data manipulation. In grout testing, sources of error may include instrumentation drift or miscalibration; variations in the grout, sand, and/or substrate; systematic bias of measurements; and/or intrinsically inaccurate instruments. The quality of reference measurements is ensured by frequent instrumentation calibration in accordance with the manufacturer's instructions. The TO shall maintain documentation of instrument calibration.

5.2 Data Quality Indicators

The data obtained during verification testing must be sound for accurate conclusions to be drawn. For all measurement and monitoring activities conducted for grout verification, the VO and EPA require that the data quality parameters be established based on the proposed end-users of the data. Data quality parameters include four indicators of data quality: representativeness, completeness, precision, and accuracy.

5.2.1 Representativeness

Representativeness refers to the degree to which data accurately and precisely reflect the conditions or characteristics of the parameters and will be ensured by consistent data acquisition and sample collection (including sample numbering, timing of sample collection, sampling procedures, sample preservation, sample packaging, and sample shipping). Using each method at its optimal capability to provide the most accurate and precise measurements possible will also ensure representativeness. Representativeness also implies collecting sufficient data during each operation to be able to detect changes in operation. The following actions will be taken to achieve this:

Test Materials:

- Test Concrete: The test concrete batch shall be rejected if the unit weight and/or water absorption properties exceed ±20% of the mean values.

Laboratory Conditions:

- Temperature and Humidity: For those tests where temperature and humidity requirements are specified, temperature and humidity readings shall be recorded daily to ensure that laboratory conditions have not changed.

Equipment:

- Proper operation: This shall be verified every morning of active testing.

5.2.2 Completeness

Completeness refers to the amount of data collected from a measurement process compared to the expected amount to be obtained. For this test plan, completeness refers to the proportion of valid, acceptable data generated using each method. The completeness objective for data generated following this test plan is 85%, as calculated by Equation 5-1.

$$Completeness = \left(\frac{n_{valid\ and\ acceptable}}{n_{total}} \right) \times 100 \qquad (5\text{-}1)$$

5.2.3 Precision

Precision refers to the degree of mutual agreement among individual measurements and provides an estimate of random error. Analytical precision is a measurement of how far an individual measurement may deviate from a mean of replicate measurements. Precision is evaluated from analysis of field and laboratory duplicates and spiked duplicates. Duplicates will be collected at a frequency of one duplicate for every ten samples collected for the laboratory analyses discussed in Chapter 4. The laboratory will run duplicate samples as part of its QA program. The data quality objective for precision is based on the type of analysis performed.

The standard deviation (SD), relative standard deviation (RSD), and/or relative percent difference (RPD) recorded from sample analyses are ways to quantify precision. SD is calculated by:

$$\text{Standard Deviation} = \sqrt{\frac{\sum \left(x_i - \bar{x} \right)^2}{n - 1}} \qquad (5\text{-}2)$$

Where:

$\bar{x}$ = sample mean

x_i = ith data point

n = number of data points

Relative percent difference (RPD) is calculated by:

$$\text{RPD} = \left(\frac{|C_1 - C_2|}{\overline{C}} \right) \times 100\% \qquad (5\text{-}3)$$

Where:

C_1 = Concentration of the compound or element in the sample

C_2 = Concentration of the compound or element in the duplicate

$\overline{C}$ = Arithmetic mean of the sample and the duplicate

As specified in *Standard Methods* (Method 1030-C), precision is specified by the standard deviation of the results of replicate analyses. For the various tests to be conducted by CIGMAT at its testing facility, precision will be measured by performing duplicate tests and evaluating the resultant data by calculating the SD, RSD, and RPD. Tables 3-1, 3-2 and 4-1 provide the required number of duplicate tests for the various testing methods.

In situations where the testing procedures specify precision objectives (such as ASTM or *Standard Methods*), the specific precision objectives must be achieved in order for the test to be considered valid. For other situations where specific precision objectives are not required, the precision values shall be reported in the verification report.

5.2.4 Accuracy

For measurements that will be recorded as part of this study, accuracy refers to the difference between the measured reading and an established reference. In order to report accuracy, the instruments used during testing shall be calibrated as required by the analytical method, and the calibration records, which are maintained as a hard copy maintained in the laboratory, shall be made available.

Spiking a sample matrix with a known amount of a constituent and measuring the recovery obtained in the analysis is a method of determining accuracy. Using laboratory performance samples with a known concentration in a specific matrix can also monitor the accuracy of an analytical method for measuring a constituent in a given matrix. Accuracy is usually expressed as the percent recovery of a compound from a sample. The following equation will be used to calculate percent recovery:

$$\text{Percent Recovery} = [(A_T - A_i) / A_s] \times 100 \qquad (5\text{-}4)$$

Where:

A_T = Total amount measured in the spiked sample

A_i = Amount measured in the un-spiked sample

A_s = Spiked amount added to the sample

During verification testing, the laboratory will run matrix spike samples at a frequency of one spiked sample for every 10 samples analyzed. The laboratory will also analyze liquid and solid samples of known concentration as lab control samples.

5.2.5 Measurements

Leaks in the model tests will be measured accurate to ± 2 mL. The weight and dimension during the grout tests will be measured to an accuracy of 0.1 g and 0.1 mm, respectively. The unit weight and strength will be measured to an accuracy of 0.5 lb/ft^3 and 2 psi, respectively.

5.2.6 Analytical Quality Control

The quality control procedures for blanks, spikes, duplicates, calibration of equipment, standards, reference check samples and other quality control measurements will follow the guidance of EPA methods and CIGMAT SOPs. Table 5-1 shows the quality control limits that will be used by the laboratory for these analyses to ensure compliance with the data quality indicators for accuracy and precision. Field and laboratory duplicate analyses will be performed at a frequency of one duplicate per ten samples collected. Samples will be spiked for accuracy determination at a frequency of one per 10 samples analyzed by the laboratory. Accuracy and precision will be calculated for all data using the equations presented in sections 5.2.2 and 5.2.3.

Table 5-1. Summary of Analytical Accuracy and Precision Limits

Analysis	Accuracy (% recovery)	Precision (RPD)
TOC	80–120	0–20

Note: If additional analytical parameters are added to the testing procedures, accuracy and precision limits shall be specified in the test plan.
RPD: Relative percent difference

6 DATA REPORTING, DATA REDUCTION, AND DATA VALIDATION

The TO (CIGMAT) is responsible for managing all the data and information generated during the testing program. To maintain quality data, specific procedures shall be followed during data reporting, reduction, and validation. These procedures are discussed below.

6.1 Data Documentation

All field and laboratory activities shall be thoroughly documented by the use of field logbooks, project approval/chain of custody sheets, laboratory notebooks and bench sheets, and instrument records.

A field logbook shall be maintained at the test facility. Daily activity entries shall be made in the logbook documenting operating conditions, observations, and maintenance activities, if any. Each sample collected shall be noted in the logbook and any other pertinent information shall be recorded. Completed pages in the logbook shall be signed and dated.

Original project approval and chain of custody forms shall accompany all samples sent to the analytical laboratory and will be maintained by the TO. The laboratory shall produce a final data report that includes all chemical test results, physical measurements, QA/QC data for blanks, accuracy (recovery), precision (percent difference), and lab control or matrix check samples. Any deviation from standard protocol shall be discussed in a narrative and any data that does not meet the QA/QC requirements shall be flagged. A narrative shall be prepared discussing the findings of any corrective action.

The laboratory shall maintain all logbooks, bench sheets, instrument printouts, and similar materials. The TO shall make these records available for inspection by the VO or EPA upon request.

6.2 Data Reduction

Data reduction refers to the process of converting raw test results into useful data for selecting grout material for wastewater system maintenance and concrete repair. Data shall be obtained from logbooks, data sheets, and computer outputs. While reduced data will be officially reported to the VO upon completion of each evaluation, all raw data shall also be made available to the VO for the QA review of the project and for record keeping.

6.3 Data Validation

The person performing each test shall verify the completeness of the appropriate data forms. The TO Director shall review laboratory logbooks and data sheets on a regular basis to verify completeness. The TO technical staff shall regularly inspect testing equipment and keep it in working order.

6.4 Verification Report

All the data collected during the testing shall be reported as indicated in Chapter 3, processed and analyzed as outlined in Chapter 5, and summarized in a verification report and verification statement following ETV Water Quality Protection Center guidelines.

The verification report shall thoroughly present and discuss the findings of the verification test. It shall contain all raw and analyzed data, all QA/QC data sheets, a description of all types of data collected, a detailed description of the testing procedure and methods, results and QA/QC results. The verification statement shall present a condensed summary of the testing procedure and findings. It is expected that the verification report will contain the following main sections.

- Verification Statement
- Notice
- Forward
- Contents
- Abbreviations and Acronyms
- Introduction and Background
- Testing Procedures and Methods
- Testing Results
- Quality Assurance/Quality Control Summary
- Glossary
- References
- Appendices
    - Raw Data and Testing Logs
    - Laboratory Standard Operating Procedures
    - Test Plan
    - Vendor Data Sheet

7 ASSESSMENTS

7.1 Audit Reports

The TO Director or designee shall perform at least one QA inspection of the test facility laboratories during the evaluation of the grout and shall document any and all findings in an audit report, which will be submitted to the VO representatives for review. The VO Program Managers may provide the report to the EPA Project Officer. At least one audit of CIGMAT will be performed by the VO (RTI or NSF Manager, RTI or NSF QA/QC staff or a designee) during the test to observe, where possible, sample preparation and storage, and to confirm proper analytical methods, QA/QC procedures and calibrations are being used. A written report will be prepared by the auditor and submitted to the RTI and NSF QA/QC Officers, who may provide the report to the EPA Project Officer.

7.2 Corrective Action Plan

Corrective actions will be taken whenever:

- There is a non-conformance with sample preparation procedures;
- An analyst observes abnormal conditions in sample preparation, measurements or storage conditions;
- The QA/QC data indicates any analysis is out of the established control limits;
- Audit findings indicate a problem has occurred; or
- Data reporting or calculations are determined to be incorrect.

All corrective actions will be reported to the VO representatives. The VO will review the cause of the problem and the corrective action taken by the TO. The review will include consideration of the impact of the problem on the integrity of the test, and a determination will be made if the test can continue or if additional action is needed. Additional action could include adding additional days to the test period, re-starting the test at day one, or other appropriate action as determined by the VO. The VO will respond to any notification of corrective action within twenty-four hours of being notified of the problem. This response can be to continue the testing, cease testing until further notice, or other appropriate communication regarding the problem. The response by the VO will be in writing by email, fax, or letter.

8 SAFETY CONSIDERATIONS

Grouting the joints for the model tests shall be done at the covered test facility at the University of Houston, which has adequate ventilation. Grout specimens for testing shall also be prepared in CIGMAT laboratories. The research personnel and technicians on-site will take all necessary precautions to ensure safety and compliance with local and federal regulations.

CIGMAT maintains a health and safety plan, which shall be made available to personnel involved in this project. Adherence to the health and safety plan shall be ensured throughout the duration of the project.

9 REFERENCES

(1) American Water Works Association (1998), Standard Methods for the Examination of Water and Wastewater, 20th Edition, American Public Health Association, Washington, D.C.

(2) Annual Book of ASTM Standards (1999), Section 4 (Construction) and Section 8 (Plastics), ASTM, Philadelphia, PA.

(3) Ata, A. and Vipulanandan, C. (1999), "Factors Affecting Mechanical And Creep Properties of Silicate-Grouted," Journal of Geotechnical and Geoenvironmental Engineering, ASCE, Vol. 125, No. 10, pp. 868-876.

(4) Ata, A. and Vipulanandan, C. (1998), "Cohesive and Adhesive Properties of Silicate Grout on the Grouted Sand Behavior," Journal of Geotechnical and Geoenvironmental Engineering, ASCE, Vol. 124, No. 1, pp. 38-44.

(5) Bodocsi, A. and Bowers, M. T. (1991), "Permeability and Acrylate, Urethane and Silicate Grouted Sands with Chemicals, Journal of Geotechnical Engineering, Vol. 117, No. 8, pp. 1227-1244.

(6) CIGMAT News and Literature Review, Vol. 1, No. 3 (1995), Center for Innovative Grouting Materials and Technology (CIGMAT), University of Houston, November 1995. (http://gem1.uh.cive.edu)

(7) Concrete Construction (Oct. 1998), "Repair, Protection and Rehabilitation, pp. 898-890.

(8) EPA (1986), Test Methods for Evaluating Solid Waste (SW 846): Physical/Chemical Methods, Washington, D.C.

(9) Henn, R. W. (1996) Practical Guide to Grouting of Underground Structures, ASCE Press, New York, NY, 191 p.

(10) Karol, R. H. (1990), Chemical Grouting, Marcel Dekker Inc., New York, NY, 465 p.

(11) Krizek, R. J. and Vipulanandan, C. (1985), "Evaluation of Adhesion in Chemically Grouted Geomaterials," Geotechnical Testing Journal, American Society for Testing Materials, Vol. 8, No. 4, pp. 184-190.

(12) Lowther, J. and Gabr, M. A. (1997), "Permeability and Strength Characteristic of Urethane-Grouted Sand," Proceedings, Grouting, Geotechnical Special Publication No. 66, ASCE , pp. 197-211.

(13) Tonyan, T. D., and Gibson, L.J. (1992), "Structure and Mechanics of Cement Foams, " Journal of Materials Science, Vol. 27, pp. 6272- 6378.

(14) Vipulanandan, C. and Krizek, R. J. (1986), "Mechanical Behavior of Chemically Grouted Sand," Journal of Geotechnical Engineering, American Society of Civil Engineers, Vol. 112, No. 9, pp. 869-887.

(15) Vipulanandan, C. and Shenoy, S. (1992)" Properties of Cement Grouts and Grouted Sands with Additives," Proceedings, Grouting, Soil Improvement and Geosynthetics, ASCE, pp. 500-511.

(16) Vipulanandan, C., Jasti, V., Magill, D. and Mack, D. (1996a), "Shrinkage Control in Acrylamide Grouts and Grouted Sands," Proceedings, Materials for the New Millennium, ASCE, Washington D.C., pp.840-850.

(17) Vipulanandan, C. and Jasti, V. (1996b) "Development and Characterization of Cellular Grouts for Sliplining," Proceedings, Materials for New Millennium, ASCE, pp. 829-839.

(18) Vipulanandan, C. and Jasti, V. (1996c), Behavior of Acrylamide and N-methylolacrylamide (NMA) Grouts and Grouted Sands, Research Report No. CIGMAT/UH 96-2, University of Houston, Houston, Texas.

(19) Vipulanandan, C. and Jasti, V. (1996d), Characterization of Polymer and Cellular Cement Grouts for Sewer Rehabilitation, Research Report No. CIGMAT/UH 96-3, University of Houston, Houston, Texas.

(20) Vipulanandan, C. and Jasti, V. (1997) "Behavior of Lightweight Cementitious Cellular Grouts," Proceedings, Grouting, Geotechnical Special Publication No. 66, ASCE, pp. 197-211.

(21) Vipulanandan, C. and Neelam Kumar, M. (2000), "Properties of Fly Ash-Cement Cellular Grouts for Sliplining and Backfilling Applications," Proceedings, Advances in Grouting and Ground Modification, ASCE, GSP 104, Denver, CO, pp. 200-214.

(22) Vipulanandan, C., O'Neill, M. W. and Weng, Y (2000) "Mechanical Properties and Chemical Resistance of Auger Grouts," Proceedings, Advances in Foundation Technologies, ASCE, GSP 100, Denver, CO, pp. 433-446.

(23) Vipulanandan, C. Mattey, Y., Magill, D. and Mack, D. (2000) "Characterizing the Behavior of Hydrophilic Polyurethane Grout," Proceedings, Advances in Grouting Technologies ASCE, GSP 104, Denver, CO, pp. 234-245.

(24) Weaver, K. (1991), Dam Foundation Grouting, ASCE Press, New York, NY, 178 p.

APPENDIX A

CIGMAT Test Methods

CIGMAT CH 2-01
CIGMAT CT 3-00
CIGMAT GR 1-00
CIGMAT GR 2-02
CIGMAT GR 3-00
CIGMAT GR 4-00
CIGMAT GR 5-00
CIGMAT GR 6-02
CIGMAT GR 7-02
CIGMAT GS 1-02
CIGMAT PC 2-99

(Questions about CIGMAT procedures may be directed to CIGMAT at the University of Houston)

APPENDIX B

Separation Systems Consultants, Inc.

Vendor Data Sheet

GROUT VENDOR DATA SHEET

Grout Product Name: GST #3

Grout Product Manufacturer Name and Address: SSCI Environmental, Inc.

17041 El Camino Real, Ste. 200; Houston, TX 77058

Grout Type: Polyurethane

Chemical Formula: Dioocyanate, oligomers of diiocyanate

TESTING METHOD	MANUFACTURER'S RESULTS
Type of Resin, Initiator and/or Promotor	Strong flexible foam, grey color
Grout Mix (by weigh or volume)	Water / various ratios
Resin Viscosity (ASTM _____)	2200 – 2500 cps
Flash Point (ASTM D 93/ _____)	200º F
Tensile Adhesion to Concrete and Clay Brick (ASTM _____)	≈ 20 psi
Chemical Resistance (ASTM _____) (NaOH, 3% H_2SO_4 or others)	Bases = Nominal impact; Sulfuric acid = Mild discoloration
Volatile Organic Compounds – VOCs (ASTM _____)	Does not apply

WORKER SAFETY	RESULT/REQUIREMENT
Flammability Rating	Not Applicable
Known Carcinogenic Content	TDI
Other Hazards (Corrosive)	None
MSDS Sheet Availability	Yes

ENVIRONMENTAL CHARACTERISTICS	RESULT/REQUIREMENT
Heavy Metal Content (w/w)	None
Leaching from Cured Grouts	None
Disposal of Cured Grouts	Cured material is non-hazardous

DATA SHEET ON PROPERTIES OF GROUT (Continued)

APPLICATION CHARACTERISTICS	RESULT/REQUIREMENTS
Minimum Application Temperature	40º F
Maximum Application Temperature	120º F
Minimum Cure Time before Immersion into Service	Water is catalyst
Type of Preparation Before Grouting	Clean surface before application
Grouting Pressure	Not applicable

VENDOR EXPERIENCE	COMMENTS
Length of Time the Grout in Use	20+ years
Applicator Training and Qualification Program	Field and classroom training
QA/QC Program for Grouts in the Field	Verify product being used

ADDITIONAL COMMENTS (Including Case Studies on Performance)