Report of Dam Safety Assessment of Coal Combustion Surface Impoundments
Central Louisiana Electric Company (Cleco)
American Electric Power (AEP)
Southwest Electric Power Company (SWEPCO)
Dolet Hills Power Station, Mansfield, LA

AMEC Project No. 3-2106-0183.0004

STATE OF LOUISIANA
DON WADE DOTSON
License. No. 30414
REGISTERED
PROFESSIONAL ENGINEER
IN
CIVIL ENGINEERING

5/4/11

Prepared By:

AMEC Earth & Environmental, Inc.
690 Commonwealth Center
11003 Bluegrass Parkway
Louisville, KY 40299

Prepared For:

U.S. Environmental Protection Agency
Office of Solid Waste and Emergency Response
Office of Resource Conservation and Recovery
1200 Pennsylvania Ave., NW
MC: 5304P
Washington, DC 20460

May 2011

I certify that the management units referenced herein:

Central Louisiana Electric Company (Cleco), American Electric Power (AEP), and Southwest Electric Power Company (SWEPCO) Dolet Hills Power Station Ash Pond 1, Ash Pond 2, Secondary Ash Pond, Auxiliary Surge Pond, Surge Pond 1, Surge Pond 2, and Fly Ash/FGD Landfill Runoff Pond, were assessed on October 20, 2010.

Signature _____

Don W. Dotson, PE
Senior Geotechnical Engineer

List of AMEC Participants who have participated in the assessment of the management units and in preparation of the report:

- Chris Eger
  CADD Technician
- Daniel Conn
  GIS Specialist
- Mary Sawitzki, PE
  Civil/Environmental Engineer

TABLE OF CONTENTS

SECTION **PAGE NO.**

1.0 INTRODUCTION AND PROJECT DESCRIPTION 1

1.1 Introduction 1
1.2 Project Background 1
1.2.1 State Issued Permits 2
1.3 Site Description and Location 3
1.4 Ash Ponds 3
1.4.1 Ash Ponds 1 and 2 and Secondary Ash Pond 4
1.4.2 Surge Ponds 5
1.4.3 Fly Ash/FGD Landfill Pond 5
1.5 Previously Identified Safety Issues 6
1.6 Site Geology 6
1.7 Inventory of Provided Materials 6

2.0 FIELD ASSESSMENT 7

2.1 Visual Observations 7
2.2 Visual Observations - Ash Ponds 7
2.2.1 Ash Ponds - Embankments and Crest 8
2.2.2 Ash Ponds - Outlet Control Structures 8
2.3 Visual Observations - Surge Ponds 9
2.3.1 Surge Ponds - Embankments and Crest 9
2.3.2 Surge Ponds - Outlet Control Structure 9
2.4 Visual Observations - Fly Ash/FGD Landfill Pond 9
2.4.1 Fly Ash/FGD Landfill Pond - Embankments and Crest 10
2.4.2 Fly Ash/FGD Landfill Pond - Outlet Control Structure 10
2.5 Monitoring Instrumentation 10

3.0 DATA EVALUATION 11

3.1 Design Assumptions 11
3.2 Hydrologic and Hydraulic Design 11
3.2.1 Long Term Hydrologic Design Criteria 11
3.2.1 Documented Hydrologic Design Criteria 13
3.3 Structural Adequacy & Stability 16
3.3.1 Comparative Stability Factor of Safety Standards 16
3.3.2 1988 Geotechnical Investigation 17
3.3.3 Additional Stability Analyses 19
3.4 Foundation Conditions 19
3.5 Operations and Maintenance 19
3.5.1 Louisiana Solid Waste Rules and Regulations 19
3.5.2 Annual Safety Assessments 19
3.5.3 Instrumentation 21
3.5.4 State or Federal Inspections 21

4.0 COMMENTS AND RECOMMENDATIONS 22

4.1 Acknowledgement of Management Unit Conditions 22
4.2 Recommendations 23
4.2.1 Hydrologic and Hydraulic 23
4.2.2 Geotechnical and Stability Recommendations 24

4.2.3 Monitoring and Instrumentation Recommendations 24
4.2.4 Inspection Recommendations.....24

5.0 CLOSING.....25

TABLES

Table 1. Site Visit Attendees 1
Table 2. Dolet Hills Rainfall Data..... 7
Table 3. Louisiana Dam Safety Program Impact Classification and Inflow Design Flood[1] 11
Table 4. MSHA* Minimum Long Term Hydrologic Design Criteria 12
Table 5. Ash Pond 1 and Ash Pond 2 -Total Rainfall Tributary Area and Pond Specifications...13
Table 6. Secondary Ash Pond - Total Rainfall Tributary Area and Pond Specifications.....13
Table 7. Louisiana DOTD Minimum Factors of Safety for Stability and Analysis[1] 16
Table 8. Minimum Stability Factors of Safety 17
Table 9. Ash Ponds Soil Characteristics and Stability Analysis Parameters 18
Table 10. Ash Ponds Stability Analyses Results 18
Table 11. CCW Ponds Monitoring Well Summary 21

FIGURES

Site Location and Vicinity Map .....Figure 1
Aerial Site Map.....Figure 2
Critical Infrastructure Map .....Figure 3
Bottom Ash Ponds Plan .....Figure 4
Bottom Ash Ponds Typical Cross Sections 1 and 2.....Figure 5
Bottom Ash Ponds Typical Cross Sections 3 and 4.....Figure 6
Auxiliary Surge Pond and Surge Pond 1 Plan .....Figure 7
Fly Ash/FGD Landfill Runoff Pond Plan and Cross Section.....Figure 8

APPENDICES

EPA Coal Combustion Dam Inspection Checklists and Coal Combustion
Waste Impoundment Inspection Forms Data - May 2010.....Appendix A
Site Photo Log Map and Site Photos.....Appendix B
Inventory of Provided Materials..... Appendix C

1.0 INTRODUCTION AND PROJECT DESCRIPTION

1.1 Introduction

AMEC was contracted by the United States Environmental Protection Agency (EPA) contract BPA EP09W001702, to perform assessments of selected coal combustion byproducts surface impoundments. AMEC was directed by EPA, through the provided scope of work and verbal communications, to utilize the following resources and guidelines to conduct a site assessment and produce a written assessment report for the coal combustion waste facilities and impoundments.

- Coal Combustion Waste (CCW) Impoundment Inspection forms (hazard rating, found in Report Appendix A)
- Coal Combustion Dam Inspection Checklist (found in Report Appendix A)
- Impoundment Design Guidelines of the Mining Safety and Health Administration (MSHA) Coal Mine Impoundment Inspection and Plan Review Handbook (hydrologic, hydraulic, and stability conditions)
- National Dam Safety Review Board Condition Assessment Definitions (condition rating)

As part of this contract with EPA, AMEC was assigned to perform an assessment of Dolet Hills Power Station (Dolet Hills), which is located in DeSoto Parish, Louisiana, near Naborton, as shown on Figure 1, the Site Location and Vicinity Map. The Dolet Hills Power Station is operated by Cleco Power LLC (Cleco); however, ownership is shared between Cleco and AEP-SWEPCO

A site visit to Dolet Hills was made by AMEC on October 20, 2010. The purpose of the visit was to perform visual observations, to inventory coal combustion waste (CCW) surface impoundments, assess the containment dikes, and to collect relevant historical impoundment documentation.

AMEC engineers, Don Dotson, P.E. and Mary Sawitzki, P.E., were accompanied during the site visit by the individuals listed on Table 1.

Table 1. Site Visit Attendees

Company or Organization	Name and Title
CLECO	Brent Croom, Environmental Services Manager – Waste and Water Quality
CLECO	Anna Hanna, Environmental Specialist

1.2 Project Background

Coal fired power plants, like Dolet Hills, produce CCW as a result of the power production process. At Dolet Hills, impoundments (dams) were designed and constructed to provide storage and disposal for the CCW that is produced. Cleco refers to the CCW impoundments at the Dolet Hills facility as Ash Pond 1, Ash Pond 2, Secondary Ash Pond, Auxiliary Surge Pond, Surge Pond 1, Surge Pond 2, and Fly Ash/Flue Gas Desulfurization (FGD) Landfill Pond. The Dolet Hills facility was constructed and placed into operation in 1986.

The National Inventory of Dams (NID), administered by the U.S. Army Corps of Engineers (USACE), provides a hazard rating for many dams within the United States. No determination was made regarding whether the CCW impoundments were listed in the NID. However, the Louisiana Department of Transportation and Development (LDOTD) lists the Ash Pond 1, Ash Pond 2, and Secondary Ash Pond shared main dam in a state database and has assigned ID 16-00546 to the dam. This shared main dam has been classified as a "Low" hazard structure by the LDOTD.

As part of the observations and evaluations performed at Dolet Hills, AMEC completed EPA's Coal Combustion Dam Inspection Checklists and CCW Impoundment Inspection Forms. Inspection forms for each pond are presented in Appendix A. The Impoundment Inspection Forms include a section that assigns a "Hazard Potential" that is used to indicate what would occur following failure of an impoundment. "Hazard Potential" choices include "Less than Low," "Low," "Significant," and "High." As defined on the Inspection Form, dams assigned a "Significant Hazard Potential" are those dams where failure or misoperation results in no probable loss of human life but can cause economic loss, environmental damage, disruption of lifeline facilities, or can impact other concerns. "Significant Hazard Potential" classification dams are often located in predominantly rural or agricultural areas but could be located in areas with population and significant infrastructure." "Low Hazard Potential" classification definition is reserved for dams where "failure or misoperation results in no probable loss of human life and low economic and/or environmental losses. Losses are principally limited to the owner's property." "Less than Low Hazard Potential" classification is reserved for dams where "failure or misoperation results in no probable loss of human life and no economic or environmental losses." Based on the site visit evaluation of the impoundments, AMEC engineers assigned a "Low Hazard" potential to each pond.

1.2.1 State Issued Permits

The Louisiana Department of Environmental Quality (LDEQ) has issued Louisiana Pollutant Discharge Elimination System (LPDES) Permit No. LA0062600 to Cleco Power, LLC. This LPDES Permit authorizes Cleco to discharge CCW related materials from Dolet Hills to Mundy Bayou and the Red River. The effective date of the permit is July 1, 2006. The permit "shall expire five (5) years from the effective date of the permit."

The LDEQ regulates the ponds by way of the Solid Waste Rules and Regulations through Solid Waste Compliance Inspections. However, these regulations do not provide a method to assign a hazard rating to the impoundments. The CCW ponds at the Dolet Hills facility carry the following Solid Waste Permit Numbers: P0037 (Bottom Ash and Secondary Ash Ponds) and P-0038 (Auxiliary Surge and Surge Ponds 1 and 2).

Draft[1] report comments provided by the State of Louisiana indicate the following:

> *For those impoundments that fall under the Louisiana Dam Safety Program (http://www.dotd.la.gov/intermodal/dams/rs38.aspx) Louisiana Revised Statute 38:25.A. Where the impoundment of liquid substances or hazardous wastes and materials by dikes, dams, or barriers is permitted or regulated under the Department of Natural Resources, that office shall adopt rules and regulations for the construction, operation and maintenance of said facilities in accordance with*

[1] AMEC submitted the Draft report to EPA in November 2010.

the requirements, rules and regulations promulgated under this Chapter and such impoundments are exempted from the provisions of this Chapter.

Please note that these former Department of Natural Resources' responsibilities related to waste now belong to the Louisiana Department of Environmental Quality.

1.3 Site Description and Location

The Dolet Hills Power Station is located near the town of Naborton in DeSoto Parish, Louisiana, approximately 6 miles east of Mansfield, Louisiana and 40 miles south of the city of Shreveport, Louisiana. The area surrounding the facility is rural. Discharges from the facility are directed to Mundy Bayou which flows into the Red River. The distances between the closest point of the ash ponds and Mundy Bayou and the Red River is approximately 0.4 miles and 9.3 miles, respectively. The Aerial Site Plan, included as Figure 2, provides a view of the seven ponds that are the subject of this assessment and their proximity to the bayou.

Figure 3, the Critical Infrastructure Map, provides an aerial view of the region and indicates the location of the Dolet Hills ash ponds and other impoundments in relation to schools, hospitals, and other critical infrastructure that is located within approximately 5 miles down gradient of the impoundments. A table that provides names and coordinate data for the infrastructure is included on the map.

1.4 Ash Ponds

Dolet Hills utilizes coal in the production of electricity. In this process, two types of ash are generated: fly ash and bottom ash. Bottom ash, the heavier and coarser of the two, is sluiced into either Ash Pond 1 or Ash Pond 2. Decant water from Ash Ponds 1 and 2 is gravity discharged into the Secondary Ash Pond. Flow from the Secondary Ash Pond is discharged by pumping for either reuse by the facility or to the permitted LPDES Outfall 002. Discharge directed to the LPDES outfall is released to an earthen channel that flows to Mundy Bayou.

Bottom ash dredged from the ash ponds is hauled to the on-site Fly Ash/Scrubber Sludge Landfill. A percentage of the fly ash is gathered and sold as product in its dry state, while the remainder is mixed with sludge from the flue gas desulfurization (FGD) process to produce a final product that is suitable for transportation to the Fly Ash/Scrubber Sludge Landfill. Flue gas desulfurization is practiced at Dolet Hills and sludge produced from this process is sent to the Auxiliary Surge Pond, which discharges into Surge Pond 1. Surge Pond 2 is used when additional volume is required for FGD process waste products. The ash handling summary detailed above was based on review of provided documentation as well as communication with Cleco facility personnel who are knowledgeable concerning the facility's operational processes.

A March 24, 2009 document, written by Cleco in response to EPA's Request for Information under Section 104(e) of the Comprehensive Environmental Response, Compensation, and Liability Act, 42 U.S.C 9604(e), provided the following general background for the ash and surge ponds.

- All ponds were commissioned in the year 1986.
- Ash Ponds 1 and 2, as well as the Secondary Ash Pond (Ash Ponds) contain bottom ash and sluice water.

- Surge Ponds 1 and 2, as well as the Auxiliary Surge Pond (Surge Ponds) contain flue gas desulfurization (FGD) sludge, ash, and sluice water.
- The Ash Ponds and the Surge Ponds were designed by a professional engineer (provided documentation indicates the consulting firm of Sargent & Lundy).
- The Ash Ponds and the Surge Ponds were constructed under the supervision of a professional engineer (provided documentation indicates Freese and Nicholas, Inc.)
- None of the Ash Ponds or Surge Ponds were in the past (prior to 2009), or are presently, inspected or monitored by a professional engineer.

Information regarding the Fly Ash/FGD Landfill Pond was not included in Cleco's response to EPA's Request for Information. However, provided documentation notes this pond receives stormwater runoff from the Landfill; therefore, this pond would contain traces of bottom ash, fly ash, and FGD sludge. Comments provided by Cleco pertaining to the Draft report noted that "original design and construction details were included in the November 14, 1985 original permit application submitted by Waldemar S. Nelson and Co., and were approved by a professional engineer."

Documentation was provided that describes a construction verification program for ponds at Dolet Hills. This program provides verification the "the in situ clays, acceptable non-synthetic liners and compacted cohesive soils used to construct the wastewater pond facilities will provide a barrier equivalent to three feet of natural clay having a coefficient of permeability no greater than $1x10^{-7}$ cm/sec." All ponds containing CCW material, except the Fly Ash/FGD Landfill Pond, were listed as requiring verification. However, design documents provided for the Fly Ash/FGD Landfill Pond indicate that the pond would be constructed to include a "recompacted clay liner as required 3' thick" beneath the entire water surface of the pond. The minimum barrier and permeability requirements are as specified by the LDEQ Solid Waste Rules and Regulations.

Additional information that is specific to each ash pond is presented in the following sections. Current descriptive information resulting from the site visit, as well as photographic references, is provided in Section 2, entitled Field Assessment.

1.4.1 Ash Ponds 1 and 2 and Secondary Ash Pond

Cleco's March 24, 2009 response to EPA's request for information indicated that each of the ponds was commissioned in 1986. The request for information, as well as recent communications with Cleco personnel, also provided the following information.

Ash Pond 1 is located directly adjacent to and south of the Secondary Ash Pond. The maximum embankment height is 35.8 feet. This pond receives sluiced bottom ash and has a surface area of 30 acres and a storage capacity of 400 acre-feet (645,333 cubic yards). The volume of material stored in the unit in September 2009 was reported to be 573,826 cubic yards (CY). The material stored in the pond as of October 2010 is less than reported for September 2009 due to dredging and excavating operations.

Ash Pond 2, which also receives sluiced bottom ash, is located directly adjacent to and north of the Secondary Ash Pond. The maximum embankment height is reported to be 30.4 feet. The surface area of Ash Pond 2 is 31 acres. The pond's storage capacity is 425 acre-feet (685,667 CY), with a reported stored material volume of 430,206 CY in September 2009. Dredging and excavation was reported to have been performed in this pond as well during 2010.

The Secondary Ash Pond, which is located between Ash Pond 1 and Ash Pond 2 and collects decant from both ponds, has a reported maximum embankment height of 39.8 feet. The pond's surface area and total storage capacity are 6.5 acres and 138 acre-feet (222,640 CY), respectively. The volume of materials reported stored in the pond in September 2009 was 79,177 CY.

Design materials included in the provided documentation indicate that the ash pond's main embankment slopes, both upstream and downstream, were designed to be 3 feet horizontal to 1 foot vertical, or 3:1 (H:V). The design documents indicate a main dike crest width of 20 feet.

An embankment plan view and cross sections are illustrated for Ash Ponds 1, 2, as well as the Secondary Ash Pond, on Figures 4 through 6.

1.4.2 Surge Ponds

The Auxiliary Surge Pond acts as an emergency storage basin for scrubber waste slurry from the flue gas desulfurization (FGD) process. Under any long term emergency conditions, scrubber waste slurry can overflow via a concrete, trapezoidal spillway into a channel and be conveyed to Surge Pond 1. The Auxiliary Surge Pond has a surface area of 0.35 acres and a storage capacity of 1.54 acre-feet (2,485 CY). The pond is incised and diked. The maximum embankment height is 9 feet. In early 2009, the volume of material reported to be stored in the pond was 3,337 CY. Comments to the Draft report provided by Cleco in February 2011, noted that "based on visual observations, there is less material present in the surge ponds than is permitted. The information presented to the EPA in April 2009 was based on the information that we had available at the time."

Surge Pond 1 is a collection basin for various plant waste streams and is reported to have a surface area of 2.25 acres and a total storage volume of 24 acre-feet (38,720 CY). The pond's stored material volume, as of March 2009, was reported to be 46,572 CY. Surge Pond 1 is also incised and diked, with a maximum embankment height of 19 feet. Provided design documentation indicates embankment slopes of 3:1 (H:V).

Surge Pond 2 provides additional storage volume during peak flow periods. This pond is completely diked, with a maximum embankment height of 20.9 feet. The pond's surface area is 4.8 acres and it has a total storage volume of 48.4 acre-feet (78,085 CY).

Plan views of the Auxiliary Surge Pond and the eastern portion of Surge Pond 1 are illustrated on Figure 7. Limited documentation was provided for Surge Pond 2, therefore plan and cross section figures are not available.

1.4.3 Fly Ash/FGD Landfill Pond

The Fly Ash/FGD Landfill Pond embankment has a cross valley configuration. This pond was placed into service in 1986 and was enlarged in 1998 through installation of a reinforced concrete wall along the embankment. The enlargement project also included the addition of a concrete spillway. As reported in a 1998 Sludge Runoff Pond Study completed by Alliance, Inc., the pond was enlarged to hold a volume equal to 1,225,000 CY at an elevation of 270 feet.

Embankment slopes of 4:1 (H:V) were reported in the documentation. The embankment height is approximately 20 feet.

Figure 8 provides a Fly Ash/FGD Landfill Pond plan view and an embankment cross section view.

1.5 Previously Identified Safety Issues

Discussions with plant personnel and review of provided documentation indicate that there are no current or previously identified safety issues from the previous 5 years at Dolet Hills.

1.6 Site Geology

The Dolet Hills facility site geology is described in the October 1988 Report entitled *Seepage Impact Assessment Plan for Surface Impoundments*, prepared by Environmental Management, Inc. Regarding site geology, the report states that:

> *Soil borings drilled in the area of Ash Basins and Secondary Pond indicated silty clay close to the surface. This silty clay, about 2 feet thick, had lenses of silty sand. It was underlain by gray, silty clays of the Porters Creek Formation. Clays of the Porters Creek Formation are of CL type on the Unified Soil Classification System and about 800 feet thick. Laboratory tests conducted on the soil samples indicated their permeability in the range of $8.3X10^{-7}$ to $1.08x10^{-7}$ cm/sec.*

1.7 Inventory of Provided Materials

Cleco provided AMEC with several documents pertaining to the design and operation of Dolet Hills. These documents were used in the preparation of this report and are listed in Appendix C, Inventory of Provided Materials.

2.0 FIELD ASSESSMENT

2.1 Visual Observations

AMEC performed visual assessments of Dolet Hills's Ash Ponds (1, 2, and Secondary), Surge Ponds (1, 2, and Auxiliary), and Fly Ash/FGD Landfill Pond on October 20, 2010. Assessment of the ash ponds was completed in general accordance with *FEMA's Federal Guidelines for Dam Safety, Hazard Potential Classification System for Dams, April 2004*. The EPA Coal Combustion Dam Inspection Checklist and Coal Combustion Waste (CCW) Impoundment Inspection Form were completed for each ash pond during the site visit and provided to the EPA via email within five business days following the site visit. Appendix A contains copies of the completed checklist forms. Photo location site maps for each ash pond, as well as descriptive photos, can be found in Appendix B. Rainfall data for the Shreveport, Louisiana area was collected for September and October, 2010 for the days prior to the site visit. Table 2, below, summarizes the rainfall data for the days and month immediately preceding AMEC's site visit.

Table 2. Dolet Hills Rainfall Data

Rainfall Prior to Site Visit	
Date	**Rainfall (inches)**
October 11, 2010	0.45
October 12, 2010	0.00
October 13, 2010	0.01
October 14, 2010	0.00
October 15, 2010	0.00
October 16, 2010	0.00
October 17, 2010	0.00
October 18, 2010	0.00
October 19, 2010	0.01
Total (9 days prior to visit)	0.47
October Rainfall	0.47
Total (30 days prior to visit)	0.49

2.2 Visual Observations - Ash Ponds

There are three ash ponds at the Dolet Hills facility, including Ash Pond 1, Ash Pond 2, and the Secondary Ash Pond. These ponds abut one another and are located east of the main facility buildings. Bottom ash (CCW) from the facility is discharged to either Ash Pond 1 or Ash Pond 2. The Secondary Ash Pond receives decant water from these two ponds. Flow from the Secondary Ash Pond is discharged by pump for either reuse by the facility or to the permitted LPDES outfall 002. Discharge directed to the LPDES outfall is released to an earthen channel that flows to Mundy Bayou. At the time of the site visit, Ash Pond 1 was dry and undergoing excavation of accumulated ash (Photos 15 through 18 and Photo 23). Monitoring wells (OW-18 and OW-16) were noted below the northern (Photos 30 and 31) and southern (Photo 22) portions of the downstream face of the main embankment.

2.2.1 Ash Ponds - Embankments and Crest

Ash Pond 1 (southern pond), Ash Pond 2 (northern pond), and the Secondary Ash Pond (central pond) abut one another and share one main embankment that runs primarily north to south along the west side of the ponds. A gravel road sits atop the embankment (Photos 3 and 6). The main embankment configuration is a combination of side-hill and cross valley. The upper downstream portions of the main embankment visually appear to have slopes greater than those described in the design documents discussed in Section 1.4.1 of this Assessment Report (3:1 H:V). Additionally, what appears to be a secondary, less steep embankment face exists below the upper, steeper portion. Internal separation embankments exist between Ash Pond 1 and the Secondary Ash Pond (Photo 2) and Ash Pond 2 and the Secondary Ash Pond (Photo 1).

The main embankment wraps around the north end of Ash Pond 2 (Photo 24). Ash was noted stacked just inside the embankment on much of the upper portions of Ash Pond 2 (Photos 25 and 26). The ground along the downstream embankment toe adjacent to Ash Pond 2 is sloped quite heavily from the north to the west of the ash pond as well as from the southwestern toe to the west (Photos 28, 29, 32, and 35). Much of the area had been recently repaired and seeded.

Large, dual stormwater culverts were located at the western downstream toe and drain to the west beneath a lower roadway (Photo 33). The northernmost culvert was noted to be half clogged with sediment; additionally, running water, possibly seepage, was noted on the ground upstream of the culverts (Photo 34). Woven and plastic liner was noted to be in place on the southwestern portions of the downstream slope repair (Photos 35 and 36). Facility personnel indicated that plans were to install rip rap in locations where the liner material is currently places once a grass cover begins to grow. An area of erosion was noted on a drainage swale that was outside (west) of the downstream embankment toe of Ash Pond 2 (Photo 37). Additional stormwater culverts were located directly west of the internal embankment shared by Ash Pond 2 and the Secondary Ash Pond, and are aligned to carry runoff from the toe of the main embankment to the west under the lower roadway (Photos 38, 39, and 40). Additional repair and seeding work was evident along the lower roadway located west of the Secondary Ash Pond portion of the main embankment (Photos 7 and 8).

A crest access roadway, which was connected perpendicularly into the southern portion of the main embankment, carried constant haul truck traffic. Erosion was evident along almost the entire toe of the north facing access road embankment (Photos 19 through 21).

2.2.2 Ash Ponds - Outlet Control Structures

Ash Pond 1 and Ash Pond 2 each receive CCW and discharge decant water to the Secondary Ash Pond through a square riser structure that features an adjustable discharge weir and pipe culvert. Photos 15 and 16 illustrate the Ash Pond 1 structure's exterior and weir.

Water surface elevations in the Secondary Ash Pond are lower than those in either Ash Pond 1 or Ash Pond 2. A freeboard of approximately 20 feet was evident in the Secondary Ash Pond. Photo 1 illustrates decant water from Ash Pond 2 (in use) discharging into the Secondary Ash Pond.

Water is discharged from the Secondary Ash Pond by pump and either returned to the facility for reuse purposes or to the permitted LPDES discharge outfall 002. Photo 9 illustrates the valve control that routes discharge to the LPDES outfall. Photo 10 illustrates the discharge

location of LPDES outfall 002. Flow is conveyed downstream to Mundy Bayou via earthen channels and roadway culverts (Photos 11, 12, and 14).

2.3 Visual Observations - Surge Ponds

Sludge from the flue gas desulfurization process is discharged to the Auxiliary Surge Pond. Surge Pond 1 receives overflow discharge from the Auxiliary Surge Pond. Surge Pond 2 is utilized to contain liquid volumes in excess of the capacity of Surge Pond 1. At the time of the site visit, Surge Pond 2 was not being utilized and contained minor liquid volume. Two monitoring wells (OW-25 and OW-26) were noted beyond the Surge Pond 2 eastern and northern toe of slope, respectively.

2.3.1 Surge Ponds - Embankments and Crest

The Auxiliary Surge Pond is primarily incised (Photo 41); however, the pond does have a small embankment present on its southern side as shown to the left in Photo 44. A drainage channel that flows into Surge Pond 1 exists between the pond crest and the outer downstream embankment slope. Grass covered most of the embankment. The pond's influent pipe can be seen to the left in Photo 41.

Like the Auxiliary Surge Pond, Surge Pond 1 is primarily incised (Photos 53 and 54). A moderate embankment exists on the southern boundary of Surge Pond 1 as shown in Photos 49, 51, and 52. Those photos also show railroad tracks that are located below the Surge Pond 1 embankment. An animal burrow was noted on the central portion of the embankment (Photo 50).

Surge Pond 2, the largest of the surge ponds, is completely diked. The grass covered embankment, shown in Photos 58 and 59 had been subject to recent reseeding efforts. An animal burrow was noted in the embankment behind a short wall built adjacent to monitoring well OW-24 (Photos 56 and 57).

2.3.2 Surge Ponds - Outlet Control Structure

The Auxiliary Surge Pond discharges over a concrete, trapezoidal spillway structure (Photos 42 and 44) during times of excess production of scrubber sludge. Flow was not being discharged from the pond during the site visit. A freeboard of nearly 4 feet was visible in the pond.

Discharge from the Auxiliary Surge Pond joins an open channel and travels west through a roadway culvert (Photo 43) and enters Surge Pond 1 (Photo 55). The influent pipe can be seen mostly submerged in Photo 55. A freeboard of between 3 and 4 feet was evident. Pumps are used to discharge reclaimed water from Surge Pond 1 back to the facility's FGD system to be reused or, if necessary, to permitted LPDES outfall 011.

No discharge structure or mechanism exists at Surge Pond 2. The pond is used only when liquid volumes are in excess of the capacity of Surge Pond 1.

2.4 Visual Observations - Fly Ash/FGD Landfill Pond

The Fly Ash/FGD Landfill Pond (Photos 60 and 61) is located apart from and south of the main facility. This pond collects stormwater runoff and leachate from the on-site landfill. Flow enters the pond at the southwest corner and flows in a northwestern direction via a concrete channel

(Photos 69 and 70). The pond contains a divider dike constructed to provide access to the center of the pond (Photos 60, 61, and 70). A monitoring well was noted in a wooded area beyond the pond embankment's downstream toe of slope.

2.4.1 Fly Ash/FGD Landfill Pond - Embankments and Crest

This pond was created with a cross valley configuration. The embankment was constructed on the western side of the pond and runs from the northeast to the southwest. The embankment crest is approximately 28 feet wide and contains a roadway (Photos 61 and 62). The upstream and downstream embankment slopes are covered by grass. Photos 62, 65, and 68 illustrate trees that are present on the downstream embankment slope. Additionally, a slump was noted in the downstream embankment face adjacent to the pond's downstream discharge valve (Photo 64).

2.4.2 Fly Ash/FGD Landfill Pond - Outlet Control Structure

Flow is discharged from this pond through an approximately 12-inch diameter embankment pipe that is valved both upstream and downstream (Photo 63). Flow is discharged to LPDES outfall 010. This pond also features a concrete emergency spillway structure with a downstream concrete apron (Photos 66 through 68).

2.5 Monitoring Instrumentation

Several monitoring wells were noted during the site visit as referenced above. Section 3.5.1, Instrumentation, provides more specific information.

3.0 DATA EVALUATION

3.1 Design Assumptions

AMEC has reviewed provided documentation related to design assumptions regarding both hydraulic adequacy and dike stability. However, some design assumptions were not available in the documentation, and have been listed as not provided where necessary.

3.2 Hydrologic and Hydraulic Design

3.2.1 Long Term Hydrologic Design Criteria

State of Louisiana Standards

The Louisiana Department of Transportation and Development (DOTD) Dam Safety Program hydrologic and hydraulic design standards (Standards) are contained in *Louisiana Administrative Code* Title 56, Part III, Chapter 7 (http://www.dotd.la.gov/intermodal/dams/Regulations.aspx). These standards identify Impact (Hazard) Classifications as well as minimum inflow design flood levels (IDF), as shown in Table 3.

Table 3. Louisiana Dam Safety Program Impact Classification and Inflow Design Flood[1]

Impact Category	Potential Loss of Life	Potential Economic Loss	Minimum Inflow Design Flood (IDF)
Low	Not Likely	Minimal	50-Year Frequency
Significant	Possible	Appreciable	100-Year Frequency
High	Likely	Excessive	½ PMF

[1] Source: *Louisiana Administrative Code* Title 56, Part III, Chapter 7

The Standards indicate that once a precipitation amount is developed, often based on data from the National Weather Service, an IDF can be determined using various hydrograph methods. The DODT will consider all dams to be of "High Impact potential until demonstrated to be otherwise by a documented analysis provided by the applicant."

According to the Standards, "for dams classified as high impact, the IDF is defined as the flood event above which a breach of the dam does not increase hazard to downstream interests." The probable maximum flood (PMF) is considered to be the upper limit of the IDF for high impact structures. An incremental hazard assessment shall be used to compare structure and downstream channel conditions with and without a dam failure "until a flood magnitude is reached for which the dam failure condition does not appreciably increase the hazard potential."

For dams with significant impact classifications, the upper limit of the IDF shall also be the PMF. Incremental hazard assessments are sometimes necessary for these dams, depending on "the extent of existing and potential downstream development, the size of the reservoir, and the type of use of the dam."

Incremental hazard assessments are not required for dams in the low impact category. Factors related to the loss of service of the dam and potential maintenance costs can be used to determine the IDF for these dams. .

The Standards note that "the Water Resources Design and Development Section should be a partner in establishing the IDF", and warn that "designs should not proceed until agreement has been reached between the DOTD and the owner's engineer on the choice of IDF." The IDF is the basis "for the entire design process" as the dam will shall be designed "to safely pass and/or contain the IDF."

MSHA Standards

The Mine Safety and Health Administration provides minimum hydrologic criteria relevant to CCW impoundments in Impoundment Design Guidelines of the Mining Safety and Health Administration (MSHA) Coal Mine Impoundment Inspection and Plan Review Handbook (Number PH07-01) published by the U.S. Department of Labor, Mine Safety and Health Administration, Coal Mine Safety and Health, October 2007.

When detailing impoundment design storm criteria, MSHA states that dams need "to be able to safely accommodate the inflow from a storm event that is appropriate for the size of the impoundment and the hazard potential in the event of failure of the dam." Additionally, MSHA notes that sufficient freeboard, adequate factors of safety for embankment stability, and the prevention of significant erosion to discharge facilities, are all design elements that are required for dam structures under their review. Additional impoundment and design storm criteria are as shown in Table 4, MSHA Minimum Long Term Hydrologic Design Criteria.

Table 4. MSHA* Minimum Long Term Hydrologic Design Criteria

Hazard Potential	Impoundment Size	
	< 1000 acre-feet < 40 feet deep	≥ 1000 acre-feet ≥ 40 feet deep
Low - Impoundments located where failure of the dam would result in no probable loss of human life and low economic and/or environmental losses.	100 - year rainfall**	½ PMF
Significant/Moderate - Impoundments located where failure of the dam would result in no probably loss of human life but can cause economic loss, environmental damage, or disruption of lifeline facilities.	½ PMF	PMF
High - Facilities located where failure of the dam will probably cause loss of human life.	PMF	PMF

*Mining Safety and Health Administration (MSHA) Coal Mine Impoundment Inspection and Plan Review Handbook (Number PH07-01) published by the U.S. Department of Labor, Mine Safety and Health Administration, Coal Mine Safety and Health, October 2007

**Per MSHA, the 24-hour duration shall be used with the 100-year frequency rainfall.

The definition of design freeboard, according to the MSHA Guidelines, is "the vertical distance between the lowest point on the crest of the embankment and the maximum water surface elevation resulting from the design storm." Additionally, the Handbook states that "Sufficient documentation should be provided in impoundment plans to verify the adequacy of the freeboard." Recommended items to consider when determining freeboard include "potential wave run-up on the upstream slope, ability of the embankment to resist erosion, and potential for embankment foundation settlement." Lastly, the Handbook states, "Without documentation,

and absent unusual conditions, a minimum freeboard of 3 feet is generally accepted for impoundments with a fetch of less than 1 mile."

The CCW impoundments at the Dolet Hills facility fall within the smallest storm event designation category on Table 3. Using MSHA long term hydrologic criteria, design for the 100-year, 24-hour rainfall event would be recommended were the impoundments to be constructed today.

3.2.1 Documented Hydrologic Design Criteria

March 2010 Facility Surface Hydrology

Excerpts from a March 2010 document, entitled *Updated Mandatory Modification Document P-0037 Bottom Ash Ponds LAC 33:VII.521*, contain hydrologic information regarding the facility. Section D.2. is entitled Facility Surface Hydrology: A description of the facility runoff/run-on collection system. Tabulated pond specification documents were also provided. Summary information from these documents is provided in Table 5 and Table 6.

Table 5. Ash Pond 1 and Ash Pond 2 -Total Rainfall Tributary Area and Pond Specifications

Facility	Ash Pond 1	Ash Pond 2
Runoff Area (acres)	93.2	93.5
Pond Area* (acres)	25.5	26.0
Total Area (acres)	118.7	119.5
Maximum Level of Ash (ft)	248.0	237.5
High Water Operating Level (3-foot allowance for operating water) (ft)	251.0	240.5
Crest of Auxiliary Spillway (ft)	253.5	243.5
Maximum 100-yr Water Surface Elevation (ft)	254.0	244.0
100-yr Freeboard (ft)	254.0 to 256.0	244.0 to 246.0
Top of Dike (ft)	256.0	246.0
Volume of Storage at High Operating Level (acre-feet)	330 (el. 220.0 to 251.0 ft.)	335 (el. 215.0 to 240.5 ft)
Maximum Potential Volume of Storage (ash plus water) (acre-feet)	400 (el. 220.0 to 253.5 ft)	420 (el. 215.0 to 243.5 ft.)
Area (acres)	25.5 (el. 251.0 ft.)	26 (el. 240.5 ft.)
Area (acres)	30 (el. 253.5 ft.)	31 (el. 243.5 ft.)

* at high operating water level

Table 6. Secondary Ash Pond - Total Rainfall Tributary Area and Pond Specifications

Facility	Secondary Ash Pond
Runoff Area (acres)	10.2
Pond Area* (acres)	5.0
Total Area (acres)	15.2
Sediment Capacity (acre-feet)	16 (el. 206.0 to 209.0 ft)

Facility	Secondary Ash Pond
Low Operating Level (ft.)	209.0
Live Storage Capacity (acre-feet)	54 (el. 209.0 to 226.5 ft.)
High Operating Level (ft)	226.5
Maximum 100-yr Water Surface Elevation (ft)	239.0
Top of Dike (ft.)	246.0
Volume of Storage at High Operating Level-from pond bottom (acre-feet)	70 (el. 206.0 to 238.0 ft)
Maximum Potential Volume Storage-from pond bottom (acre-feet)	138 (el. 206.0 to 238.0 ft)
Area (acres)	5 (el. 226.5 ft.)
Area (acres)	6.5 (el. 238.0 ft.)

The weir boxes that exist in each Ash Pond were designed to drain slowly. Therefore, since the tributary drainage areas to each Ash Pond are large, an auxiliary spillway was provided between the Ash Ponds and the Secondary Ash Pond "to protect against overflow of the dikes during a period of high runoff when the basin is full of ash." The excerpt further states that:

> *The crest elevation of the auxiliary spillway is set so that overflow of the spillway will not occur for runoffs equal to or less than the 50-year, 24-hour runoff. Each spillway is designed to discharge excess rainfall due to a 100-year, 24-hour runoff occurring with the basin at a maximum operating water level. The elevation of the top of the dikes for each Ash* [Pond] *was selected to provide 2 feet of interior freeboard above the maximum (100-year) water level.*

Calculations in support of the above information were not provided. AMEC performed some basic calculations in an attempt to verify the provided information for Ash Pond 1.

1) Available Ash Pond 1 Storage, at high water operating level elevation 251.0 feet (330 acre-feet) to crest of auxiliary spillway elevation 253.5 feet (400 acre-feet) is 70 acre-feet (AF), equivalent to 3,049,200 cubic feet (CF);
2) 50-year, 24-hour rainfall is equivalent to approximately 10 inches for the region surrounding the Dolet Hills facility (Technical Paper 40, Rainfall Frequency Atlas of the United States, U.S. Weather Bureau, 1961.);
3) Distribution of 10 inches of rainfall over the 30 acre impervious pond surface is equivalent to 1,089,000 CF;
4) Distribution of 10 inches of rainfall over the 92.3 acre outside pond area tributary to Ash Pond 1 is equivalent to 3,350,500 CF;
5) To contain runoff from tributary area below elevation 253.5 feet, <u>must assume infiltration rate of at least forty-two percent</u>, or C equal to a maximum of 0.58;
6) The adjusted runoff is then equivalent to 1,943,300 CF (3,350,500 CF x 0.58); and
7) Total runoff (1,089,000 CF + 1,943,300 CF) is equivalent to 3,032,300 CF, slightly less than the available storage of 3,049,200 CF (70 AF).

Additional description was provided regarding surge capacity in the Secondary Ash Pond that exists between the high operating water level and the crest of the pipe spillway.

> *The Ash Basins and Secondary Pond, acting as a system, were designed with a surge capacity equal to the 10-year, 24-hour runoff so that infrequent pipe spillway discharges will occur. The majority of the time, the Ash Basins and Secondary Pond, acting as a system, have the capacity to store runoff far in excess of the 10-year, 24-hour runoff without any discharges via the pipe spillway. However, there is a condition (which occurs for a few months every other year), when Ash Basin No. 2 is full (no cleaning started) and Ash Basin No. 1 is partially full, when the point of minimum available storage occurs for the pond system. This minimum available storage condition was used to size the surge capacity of the Secondary Pond so that the pond system surge capacity equals the 10-year, 24-hour runoff.*

Lastly, the document described the pipe spillway from the Secondary Pond and noted that it "has been designed to discharge excess runoff from the 100-year, 24-hour rainfall while maintaining a minimum interior freeboard of 7 feet."

It is not clear if the scenario described above still exists at the facility, as discharge from the Secondary Ash Pond is by pump and discharge piping sits atop the embankment crest at elevation 246.0 feet.

Technical Paper No. 40, Rainfall Frequency Atlas of the United States, U.S. Weather Bureau, 1961 indicates the 100-year, 24-hour rainfall for northwestern Louisiana is approximately 10.7 inches. Capacities, as described above, cannot be verified without calculations that include clearly defined assumptions and conditions.

Surge Ponds

Hydrologic and operating water surface elevation information were not provided for Surge Pond 1 or Surge Pond 2. The Auxiliary Surge Pond is incised without the possibility of embankment failure due to overtopping.

1998 Fly Ash/FGD Landfill Pond Hydrology Information

A 1998 document entitled, Sludge Runoff Pond Study, by Alliance, Inc. contains information pertaining to the Fly Ash/FGD Landfill Pond storm runoff capacity. The Fly Ash/FGD Landfill Pond was constructed as an integral part of the on-site landfill at the Dolet Hills facility. Early documentation indicated that the originally intended pond crest was planned at elevation 275 ft. However, the pond had been operating with an overflow set to elevation 265 ft. The 1998 study was undertaken to determine the size of landfill area "that the runoff pond could serve during a design 25-year, 24-hour frequency storm." The other issue was whether the pond volume could be increased.

Pond runoff volumes provided in the report include:

At Elevation 265 (existing) - 1,000,000 ± cubic feet
At Elevation 270 (proposed) - 1,600,000 ± cubic feet

However, the bottom 8 feet of the pond would be required to provide volume for sludge storage. The sludge volume was estimated to be 375,000 cubic feet. Therefore, the adjusted storm event runoff volumes would be:

At Elevation 265 (existing) - 625,000 ± cubic feet
At Elevation 270 (proposed) - 1,225,000 ± cubic feet

Rainfall for the 25-year, 24-hour event was listed correctly as 8.75 inches and a runoff factor of 0.9 to 1.0 was chosen. Using these parameters, a maximum runoff of 31, 763 cubic feet per acre of landfill area could be expected. Therefore, with 1,225,000 cubic feet of storage available at elevation 270 ft, the area of landfill that could contribute runoff to the pond before exceeding the available storage volume would be slightly over 38 acres. The pond embankment would be required to be raised, or additional discharge structures provided, to enable the pond to store/pass a storm event greater than the 25-year storm. Stage storage routing for the pond was not provided for review.

Additionally, this study determined the hydraulic capacity of the 48-inch conveyance pipe and the series of sumps and inlets that discharge storm runoff to the Fly Ash/FGD Landfill Pond from the landfill. A concern was raised that the storage capacity of the enlarged pond would be greater than the hydraulic capacity of the inlets. However, the study proposed changes that, if made, would increase the hydraulic conveyance capacity of the system to not only meet the requirements of the 25-year storm, but contain and pass a 100-year event.

3.3 Structural Adequacy & Stability

3.3.1 Comparative Stability Factor of Safety Standards

The Louisiana Department of Transportation and Development (DOTD) Dam Safety Program geotechnical design standards (Standards) are contained in *Louisiana Administrative Code* Title 56, Part III, Chapter 7 (http://www.dotd.la.gov/intermodal/dams/Regulations.aspx). The Standards note that embankment "stability analysis should consider after-construction conditions, based on the undrained shear strength parameters determined by laboratory tests." Further, "long-term steady seepage, partial pool, and rapid drawdown analyses should also be performed, using shear properties appropriate to the subject materials." Table 7 summarizes the minimum safety factors found in the DOTD Standards.

Table 7. Louisiana DOTD Minimum Factors of Safety for Stability and Analysis[1]

Analysis Condition	Factor of Safety
Rapid Drawdown	1.25
Partial Pool	1.40
Steady Seepage	1.40
After Construction	1.30
Earthquake	1.15

[1] Source: *Louisiana Administrative Code* Title 56, Part III, Chapter 7

Two well regarded national sources for embankment design and evaluation criteria include The United States Army Corps of Engineers (USACE) and the United States Mine Safety and Health Administration (MHSA). Minimum recommended factors of safety for different loading conditions can be found in those agency publications, as shown in Table 8 below.

Table 8. Minimum Stability Factors of Safety

Loading Condition	MSHA[1]	USACE[2]
Rapid Drawdown	1.3	1.1[3] - 1.3[4]
Long-Term Steady Seepage	1.5	1.5
Earthquake Loading	1.2	---[5]

[1] Coal Mine Impoundment Inspection and Plan Review Handbook, 2007, US Mine Safety and Health Administration
[2] Slope Stability Publication, EM1110-2-1902, 2003, US Army Corps of Engineers, Table 3-1: New Earth and Rock-Fill Dams
[3] Applies to drawdown from maximum surcharge pool
[4] Applies to drawdown from maximum storage pool
[5] Referred to USACE Engineer Circular "Dynamic Analysis of Embankment Dams" document that is still in preparation

To consider the structural adequacy and stability of the ash ponds at Dolet Hills Power Station, AMEC reviewed stability analysis material provided by SWEPCO with respect to the load cases shown in Table 8. Factors of safety documented in the provided material were compared with those factors outlined in the table to help determine whether the impoundments meet the requirements for acceptable stability.

3.3.2 1988 Geotechnical Investigation

The Geotechnical Investigation for Dikes of Ash Basin No. 1, Secondary Pond and Ash Basin No. 2, dated October 1988, prepared by Foundation Testing Laboratories, Inc. includes a stability analysis for the three bottom ash basins. Analyses were performed for the interior dividing dikes (perpendicular to the main dike), which were not assessed during the site visit, as well as for the main dike that runs north to south along the western boundary of the ash ponds.

Subsurface samples were collected from seven borings, three per each inner dike and one at the southwest corner of Ash Pond 1 just north of the crest access road ramp that ranged from thirty (30) to fifty-five (55) feet below the existing ground surface. The Investigation describes the use of Shelby Tube Sampler collection of relatively undisturbed samples from cohesive and semi-cohesive soils. Standard Penetration Tests were performed in the borings. Field permeability tests, using a single packer type test method, were conducted in all borings at varying depths. Upon field testing completion, all boring were sealed with cement-bentonite slurry per Louisiana water well rules, regulations, and standards.

Laboratory work included tests to determine classification and consistency, such as measurement of natural water content and dry unit weight, additional water content tests, and plastic and liquid limit tests. Soil strength of cohesive material was determined using unconfined compression tests as well as pocket penetrometer tests. It appears that cohesionless shear strengths were correlated to blow counts. Lastly, falling-head permeability tests were performed. Table 9 below summarizes soil characteristics and strength parameters.

Table 9. Ash Ponds Soil Characteristics and Stability Analysis Parameters

Zone	Material Description	Depth (ft)	Unit Weight (pcf)	Shear Strength (psf)	Friction Angle (degrees)
Analysis Section A-A (dividing dike between Ash Pond 1 and Secondary Pond)					
1	Medium to Very Stiff Silty Clay or Clay	256 - 251	100	1000	0
2	Medium to Very Stiff Silty Clay or Clay (saturated)	251 - 226	113	607	5
3	Very Dense Silty Sand	226 - 216	0	30	130
4	Hard Laminated Silt and Clay	216 - 201	100	5	1000
Analysis Section B-B (dividing dike between and Secondary Pond and Ash Pond 2)					
1	Medium to Stiff Silty Clay or Silty Sandy Clay	246 - 228.5	117	1000	0
2	Very Dense Silty Sand	228.5 - 206	130	0	30
3	Hard Laminated Silt and Clay	206 - 201	120	1500	5
Analysis Section C-C (main dike)					
1	Stiff to Very Stiff Silty Clay or Clay	256 - 226	120	1200	5
2	Laminated Very Stiff to Hard Silty Clay	226 - 211	118	1500	5

Stability analyses were performed using the parameters in Table 9 and the Bishop Modified Method. Downstream pond water levels reflect those measured on September 26, 1988. Stability analyses results are presented in Table 10.

Table 10. Ash Ponds Stability Analyses Results

Analysis Condition	Calculated Factor of Safety
Analysis Section A-A (dividing dike between Ash Pond 1 and Secondary Pond, crest elev. 256.0 feet)	
Steady State	1.608
Seismic (0.05g)	1.325
Seismic (0.10g)	1.101
Analysis Section B-B (dividing dike between and Secondary Pond and Ash Pond 2, crest elev. 246.0 feet)	
Steady State	1.944
Seismic (0.05g)	1.552
Seismic (0.10g)	1.272
Analysis Section C-C (main dike, crest elev. 256.0 feet)	
Steady State	2.96
Seismic (0.05g)	2.252
Seismic (0.10g)	1.801

3.3.3 Additional Stability Analyses

Stability Analyses were not presented for Surge Pond 1, Surge Pond 2, the Auxiliary Surge Pond, or the Fly Ash/FGD Landfill Runoff Pond. The Auxiliary Surge Pond is completely incised and therefore does not require a geotechnical stability evaluation.

3.4 Foundation Conditions

Foundation conditions were provided in the October 1988 Geotechnical Investigation referenced in Section 3.3. Ground beneath the dividing dikes on either side of the Secondary Ash Pond was found to be hard, laminated silt and clay, classified as CL or CH. Several attempts were made to advance Shelby Tube Samplers; however, the hardness of the soils caused several tubes to sustain damage. Water did not flow through the soil of the north dividing dike during a packer test where head pressures of twenty to twenty-five pounds per square inch were applied. The foundation of the main dike at the identified boring location was found to be laminated very stiff to hard silty clay.

Foundation information for other ponds was not provided.

3.5 Operations and Maintenance

3.5.1 Louisiana Solid Waste Rules and Regulations

Per Louisiana Solid Waste Rules and Regulations, the bottom ash ponds must be inspected daily for sufficient freeboard, evidence of leaks, and conditions of structural integrity. Cleco personnel conduct these daily inspections of the bottom ash ponds and report any issues or repair needs to their Environmental Services Department.

3.5.2 Annual Safety Assessments

<u>2009 Safety Assessment</u>

A safety assessment of the ash pond dikes, entitled 2009 Inspection Report Dolet Hills Make-Up Water Pond and Ash Ponds was performed on March 17, 2009 by URS Corporation personnel.

Concerning Ash Basin 1, URS noted that the upper steep portion of the downstream embankment was “overgrown with small woody vegetation.” The recommendation was made to allow the vegetation to remain as it was “providing erosion protection to an oversteepened slope.” URS stated their opinion that “this short section of oversteepened slope is not currently a concern for the stability of the dike itself since the dike crest is over 60 feet wide, and there is not a significant hydraulic gradient through the wide dike.” URS also noted that the upper portions of the slope displayed minor sloughing and that this action “would likely continue unless the slope is flattened.”

Trees and woody vegetation were noted to exist growing along the toe of the downstream slope of Ash Pond 2, and that this area was noted in previous inspections. URS recommended that the trees and vegetation be removed above the toe, but that growth below the toe be allowed to remain as erosion control along a natural drainage swale.

Portions of the northeast embankment of the Secondary Pond were noted to have some visible sloughing due to what was said to be recent maintenance. URS recommended those areas "be repaired and reseeded once maintenance activities are completed."

Surge Pond 1 (Primary Surge Pond) was noted to have areas of sloughing on the upper portions of the downstream embankment; additionally, this area was noted to be too steep to allow mowing. Other isolated areas of sloughing were noted as well. URS recommended that, although the ponds wide crest adds integrity to the dike, the oversteepened condition of the embankment requires continued monitoring of the slope.

Surge Pond 2 (Secondary Surge Pond) was reported to have a very poor grass cover on the inside crest "from 5 feet below the crest to the waterline." A sizeable, active landslide was noted to exist in the pond's inner northwest corner. Additionally, "Two smaller slides were observed in the southwest side and northeast side of the pond. Erosion channels existed around the majority of the pond's perimeter above the shoreline. URS recommended stabilizing the inner slopes "as soon as possible to prevent propagation of past and current slides." Additional recommendations included establishing vegetation on the inner slopes, or placing riprap if vegetation establishment was not possible.

Inspection results for all other, non-noted areas and ponds were positive. URS recommended that "Monitoring procedures and maintenance activities should be implemented in coordination with the AEP Geotechnical Engineering Group.

<u>2010 Safety Assessment</u>

A 2010 safety assessment of the ash pond dikes, entitled 2010 Inspection Report Dolet Hills Make-Up Water Pond and Ash Ponds was performed on June 29, 2010 by AEP personnel.

The report noted that "The downstream slope of Ash Pond 1, which provides foundation support for the ash lines show[s] significant erosion." A recommendation was given to evaluate the exposed foundation supports and to repair the slope area to provide acceptable support for the ash lines. Generally, except for those presented below, all other features of the CCW ponds were noted to be in good condition,.

The tree removal recommended for Ash Pond 2 in the 2009 Safety Assessment had been completed. AEP recommended that the area be regraded and seeded to "avoid more significant erosion."

Surge Pond 1 was again noted to have the oversteepened embankment and recommendations were given to continue monitoring the condition.

The landslides located on the inner slopes of the Secondary Surge Pond, reported in the 2009 Safety Assessment, were noted to have been repaired. The inner slope grass cover was again noted to be poor from approximately 5 feet below the crest to the waterline and erosion channels continued to be "observed along almost the entire perimeter of the pond above the shoreline."

A recommendation was noted to install staff gauges, or other type of water level measuring device, in "all of the plant's pond facilities so that current water levels may be obtained and recorded on a regular basis." Additionally, "monitoring procedures and maintenance activities

should be programmed by the owner's representative with the assistance of a professional engineer."

3.5.3 Instrumentation

Several monitoring wells, both background and compliance, exist across the Dolet Hills facility property. These wells are sampled as part of the LDEQ Solid Waste Compliance Inspections as required by Cleco's Dolet Hills Solid Waste Permit. Table 11 lists the background and compliance wells relative to the CCW ponds.

Table 11. CCW Ponds Monitoring Well Summary

Well Type	P-0037: Bottom Ash Ponds
Background	OW-3, OW-4, OW-5, OW-19, OW-20, OW-21A, OW-22, OW-23, OW-27
Compliance	OW-16, OW-17A, OW-18, OW-31, OW-32
Well Type	**P-0038: Surge Basins**
Background	OW-3, OW-4, OW-5, OW-8, OW-19, OW-20, OW-21A, OW-22, OW-23, OW-25, OW-27
Compliance	OW-1, OW-2, OW-24, OW-26, OW-33
Well Type	**Fly Ash/FGD Landfill Runoff Pond**
Compliance (Downstream Detection)	MW-9A, MW-10, MW-11

Additional monitoring instrumentation, such as embankment and crest piezometers, is not in place at the Dolet Hills facility.

3.5.4 State or Federal Inspections

The Louisiana Department of Environmental Quality (LDEQ) visits the facility approximately twice per year to assess the solid waste facilities and groundwater monitoring systems. Documentation of the visits was provided for the time period from May 2006 through April 2010, except for the year 2008. The documentation consistently noted no issues with facility operation or monitoring.

Per the Louisiana Dam Safety Program requirements, the State of Louisiana Department of Transportation and Development (LDOTD) performs inspections of Ash Ponds 1 and 2 and the Secondary Ash Pond every five years. The inspection frequency is based on the fact that, according to LDTOD, these ponds are considered to represent a "Low" hazard. The 2004 inspection conducted by LDOTD staff, noted "grass and trees growing along the entire length of the upstream slope" of Ash Pond 1. The 2009 inspection, which was conducted by ECM Consultants on behalf of the LDOTD, noted "several ruts on the embankment crown due to vehicle traffic." The location of the rutting, with respect to the entire crown, was not clear. The conditions of note were required to be corrected with written verification submitted to the LDOTD. The next inspection is scheduled for the year 2014. Surge Pond 1, the Auxiliary Surge Pond, and the Fly Ash/FGD Landfill Runoff Pond were not included in the LDOTD inspections; additionally, the dam structures on these ponds have not been assigned identification numbers by LDOTD.

4.0 COMMENTS AND RECOMMENDATIONS

Condition assessment definitions, as accepted by the National Dam Safety Review Board, are as follows:

SATISFACTORY

No existing or potential dam safety deficiencies are recognized. Acceptable performance is expected under all loading conditions (static, hydrologic, seismic) in accordance with the applicable regulatory criteria or tolerable risk guidelines.

FAIR

No existing dam safety deficiencies are recognized for normal loading conditions. Rare or extreme hydrologic and/or seismic events may result in a dam safety deficiency. Risk may be in the range to take further action.

POOR

A dam safety deficiency is recognized for loading conditions which may realistically occur. Remedial action is necessary. POOR may also be used when uncertainties exist as to critical analysis parameters which identify a potential dam safety deficiency. Further investigations and studies are necessary.

UNSATISFACTORY

A dam safety deficiency is recognized that requires immediate or emergency remedial action for problem resolution.

NOT RATED

The dam has not been inspected, is not under state jurisdiction, or has been inspected but, for whatever reason, has not been rated.

4.1 Acknowledgement of Management Unit Conditions

I certify that the management units referenced hereinafter were personally assessed by me and was found to be in the following condition:

Ash Pond 1: Fair

Ash Pond 2: Fair

Secondary Ash Pond: Poor

Auxiliary Surge Pond: Satisfactory

Surge Pond 1: Poor

Surge Pond 2: Poor

Fly Ash/FGD Landfill Pond: Poor

All of the ponds were rated Poor in the Draft report due to missing hydrologic, hydraulic or stability documentation. However, additional review of originally provided documentation resulted in improvement of some of the ponds' condition ratings. The lack of additional documentation resulted in other ponds' condition ratings remaining unchanged from the Draft Report.

The EPA is currently working to complete final rules for the CCW assessment program. Additionally, condition ratings noted in this *Report of Dam Safety Assessment of Coal Combustion Surface Impoundments* represent a snapshot in time. If the following recommendations are implemented and acceptable levels of protection are shown, it may be possible to improve the condition ratings if the CCW impoundments were to be re-evaluated in the future.

4.2 Recommendations

4.2.1 Hydrologic and Hydraulic

Draft Report

AMEC recommends that an appropriate design storm rainfall and freeboard depth in accordance with MSHA guidelines be applied to each impoundment's watershed to assess whether the dam and decant system can safely store, control, and discharge the design flow. Based on the size and rating for the ponds, the design storm would be the 100-year, 24-hour event. Hydraulic calculations should also be completed to determine the rate at which the discharge system could pass the design storm, if necessary, or draw down elevated water surfaces following such an event. The analysis should consider all critical stages over the life of the pond including full pond conditions.

Final Report

Further review of the originally provided hydrologic documentation for the Ash Ponds (1, 2, and Secondary) showed that Ash Ponds 1 and 2 appear to be able to contain runoff from the 50-year 24-hour rainfall events and send excess runoff from larger rainfall events into the Secondary Pond. Reference to maintenance of a two foot freeboard with the capacity to pass the 100-year 24-hour rainfall event was also described for these two ponds. Therefore, those ponds were given a Fair rating. The Fair rating is defined as *no existing dam safety deficiencies are recognized for normal loading conditions. Rare or extreme hydrologic and/or seismic events may result in a dam safety deficiency. Risk may be in the range to take further action*. AMEC recommends that detailed calculations be completed to provide documentation in support of the "Specifications" described above as well as in Table 5 of this Assessment report.

The Secondary Pond received a condition rating of Poor because too little information was provided to draw solid conclusions as to its capacity to handle discharge from both Ash Pond 1 and Ash Pond 2 during large rainfall events. Information concerning discharge pump capacity was not provided. It was noted that the Secondary Ash Pond operates at a much lower elevation than either Ash Pond 1 or 2; however, no calculations were provided to support the relationship between the ponds that was described in provided documentation. AMEC

recommends that detailed calculations be completed to provide clear and concise documentation in support of the relationship between all three Ash Ponds and the "Specifications" described in Table 6 of this Assessment report for the Secondary Ash Pond.

No hydrologic or hydraulic information was provided for Surge Ponds 1 and 2. The information originally provided for the Fly Ash/FGD Landfill Pond was not clarified with any additional information or calculations. As such, conclusions regarding the ability of these ponds to operate under normal loading conditions could not be determined and their condition ratings remained Poor. The Auxiliary Surge Pond is completely incised, therefore, hydrologic and hydraulic information is not required in support or embankment stability conditions. This pond received a satisfactory condition rating.

4.2.2 Geotechnical and Stability Recommendations

Draft Report

Based on the stability analyses provided to AMEC, Ash Ponds 1 and 2 and the Secondary Ash Pond meet minimum factors of safety. Additional studies would be required to assess and document the geotechnical stability of the remainder of the management units.

Final Report

Geotechnical information and stability analyses were not provided for Surge Ponds 1 and 2 or the Fly Ash/FGD Landfill Pond. The condition rating of these ponds remains Poor. AMEC recommends that complete geotechnical and stability studies be completed for these ponds.

4.2.3 Monitoring and Instrumentation Recommendations

Any environmental sampling of the monitoring wells within the zone of influence of the impoundment structures should include groundwater elevation readings. These readings should be reviewed at least annually by a Professional Engineer.

4.2.4 Inspection Recommendations

Annual visual inspections of each management unit should be performed by a Professional Engineer. Inspection reports should be maintained by the facility. Additionally, daily inspections performed by facility O&M personnel should be supported by an inspection checklist that could also serve as documentation of the inspection.

Vegetation on the impoundments should continue to be aggressively managed. We further recommend that vegetation be managed based on guidance in (a) Corps of Engineers EM 1110-2-301, Guidelines for Landscape Planting and Vegetation Management at Floodwalls, Levees, and Embankment Dams and (b) FEMA 534, Technical Manual for Dam Owners: Impacts of Plants on Earthen Dams. Additionally, animal impact should be mitigated based on guidance in FEMA 473, Technical Manual for Dam Owners: Impacts of Animals on Earthen Dams.

5.0 CLOSING

This report is prepared for the exclusive use of the Environmental Protection Agency for the site and criteria stipulated herein. This report does not address regulatory issues associated with storm water runoff, the identification and modification of regulated wetlands, or ground water recharge areas. Further, this report does not include review or analysis of environmental or regional geo-hydrologic aspects of the site, except as noted herein. Questions or interpretation regarding any portion of the report should be addressed directly by the geotechnical engineer.

Any use, reliance on, or decisions to be made based on this report by a third party are the responsibility of such third parties. AMEC accepts no responsibility for damages, if any, suffered by any third party as a result of decisions made or actions based on this report.

The conclusions and recommendations given in this report are based on visual observations, our partial knowledge of the history of Dolet Hills impoundments, and information provided to us by others. This report has been prepared in accordance with normally accepted geotechnical engineering practices. No other warranty is expressed or implied.

FIGURES

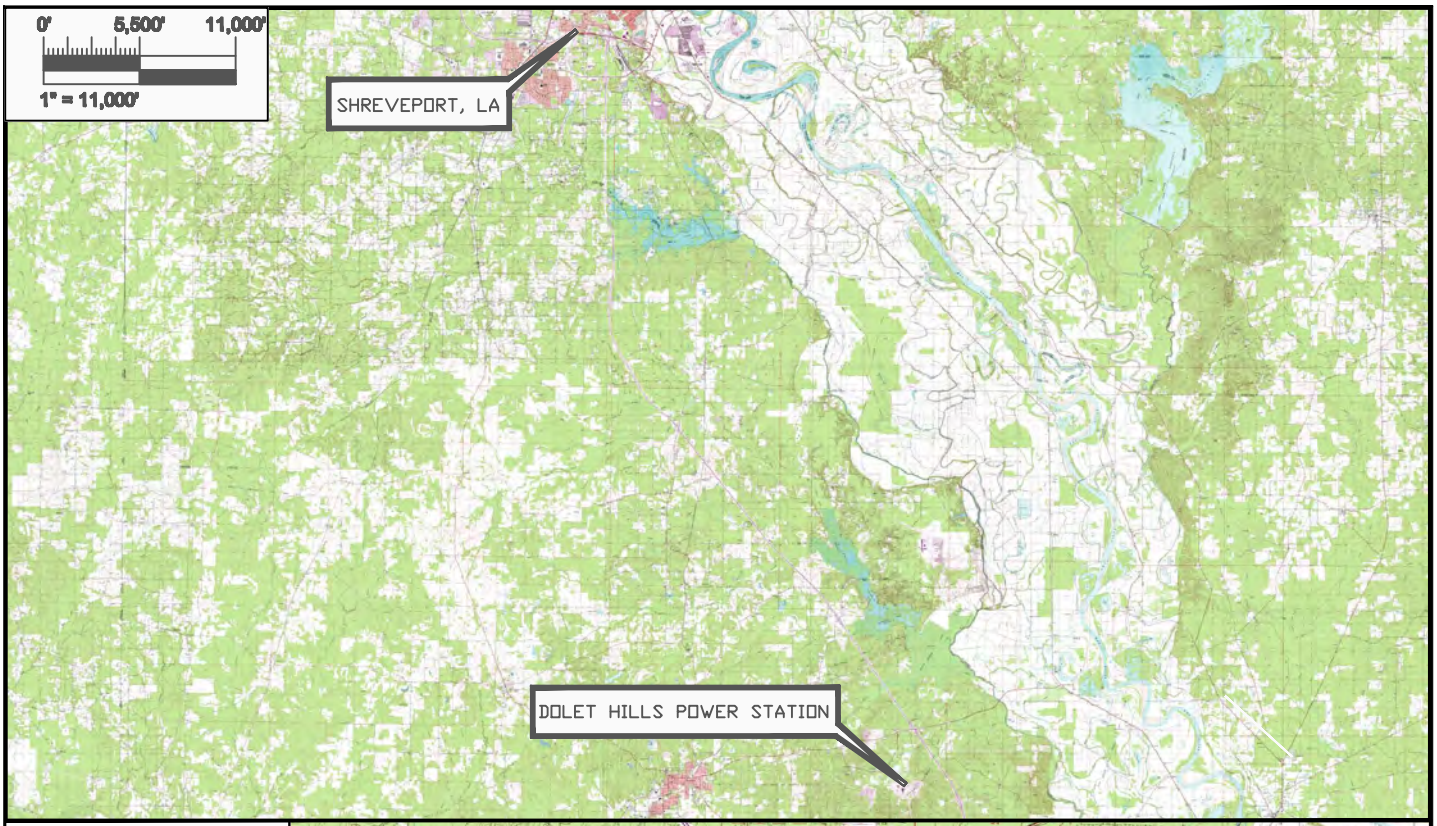

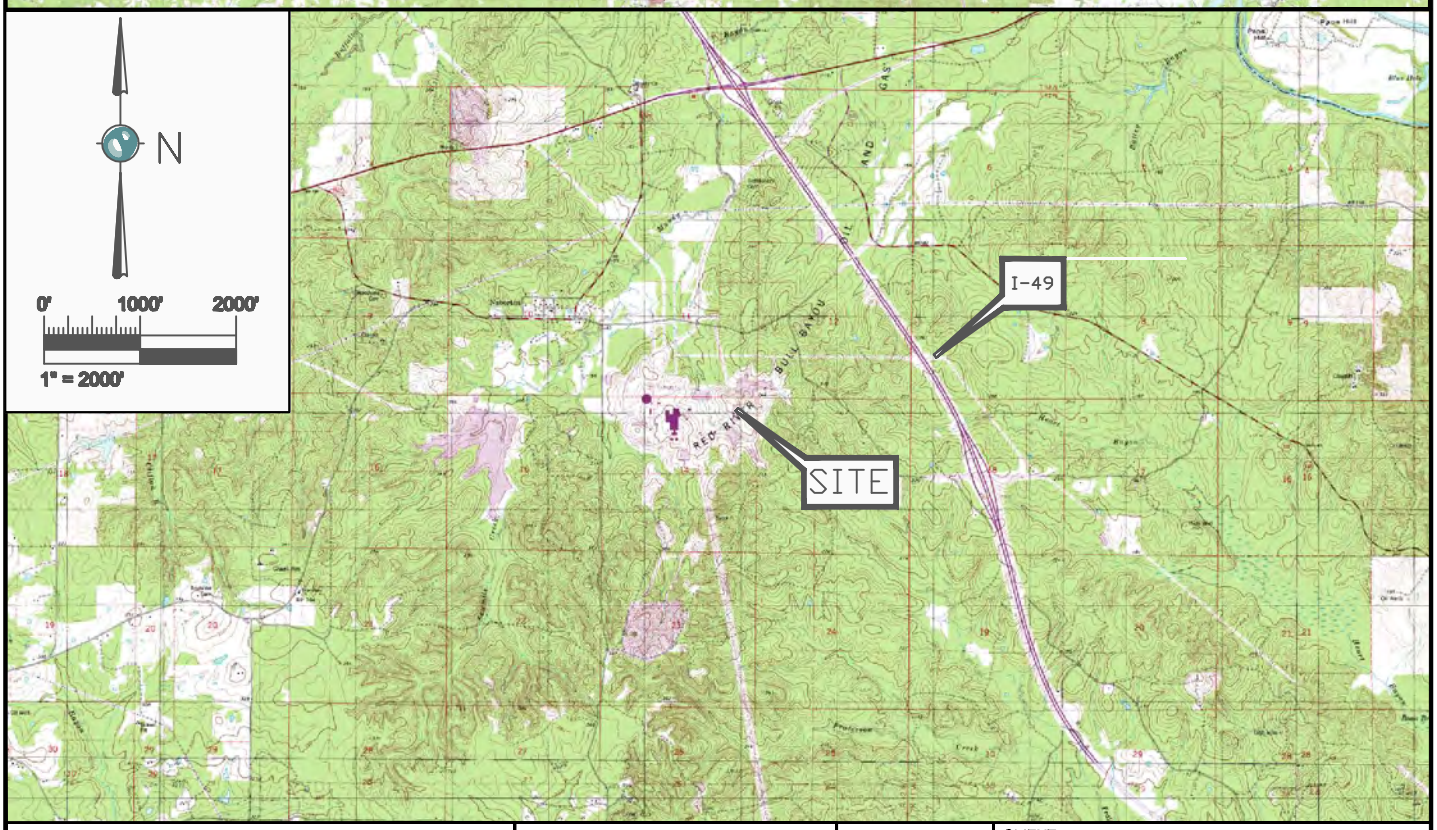

AMEC Earth & Environmental
690 Commonwealth Center
11003 Bluegrass Parkway
Louisville, Ky 40299
(502) 267-0700

amec

CLIENT LOGO

CLIENT
UNITED STATES ENVIRONMENTAL PROTECTION AGENCY

PROJECT ASSESSMENT OF DAM SAFETY OF COAL COMBUSTION SURFACE IMPOUNDMENTS	DWN BY: CAE	DATUM:	DATE: 11/5/10
TITLE AEP-SWEPCO/CLECO DOLET HILLS POWER STATION, MANSFIELD, LA SITE LOCATION & VICINITY MAP	CHK'D BY: MOS	REV. NO.:	PROJECT NO: 3-2106-0183.0004
	PROJECTION:	SCALE: AS SHOWN	FIGURE: 1

UNITED STATES
ENVIRONMENTAL PROTECTION AGENCY

AMEC Earth & Environmental
690 Commonwealth Business Center
11003 Bluegrass Parkway
Louisville, KY 40299

DWN BY:	DJC
CKD BY:	MS
Datum:	NAD 83
Projection:	UTM 15
Scale:	As Shown

ASSESSMENT OF DAM SAFETY OF
COAL COMBUSTION SURFACE IMPOUNDMENTS

AEP-SWEPCO/CLECO
DOLET HILLS POWER STATION, MANSFIELD, LA
AERIAL SITE MAP

REV. No.:	A
Date:	11-9-10
Project No:	3-2106-0183-0004
Figure No:	2

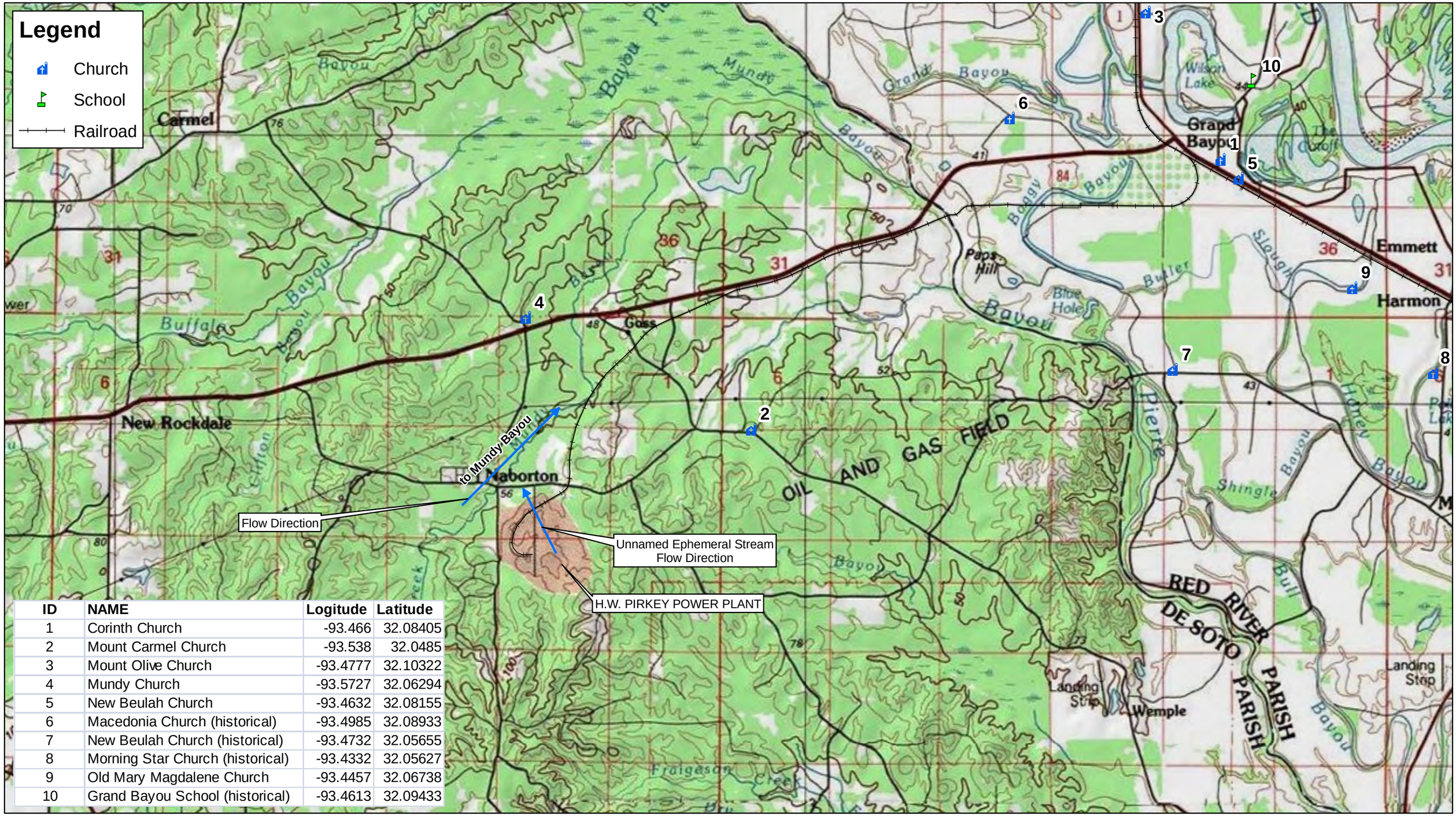

ID	NAME	Logitude	Latitude
1	Corinth Church	-93.466	32.08405
2	Mount Carmel Church	-93.538	32.0485
3	Mount Olive Church	-93.4777	32.10322
4	Mundy Church	-93.5727	32.06294
5	New Beulah Church	-93.4632	32.08155
6	Macedonia Church (historical)	-93.4985	32.08933
7	New Beulah Church (historical)	-93.4732	32.05655
8	Morning Star Church (historical)	-93.4332	32.05627
9	Old Mary Magdalene Church	-93.4457	32.06738
10	Grand Bayou School (historical)	-93.4613	32.09433

amec
AMEC Earth & Environmental
690 Commonwealth Business Center
11003 Bluegrass Parkway
Louisville, KY 40299

UNITED STATES
ENVIRONMENTAL PROTECTION AGENCY

DRAWN BY: DJC
CHK'D BY: MS
DATUM: NAD83
PROJECTION: UTM 15
SCALE: AS SHOWN
DATE: 11/9/2010

ASSESSMENT OF DAM SAFETY OF
COAL COMBUSTION SURFACE IMPOUNDMENTS

AEP-SWEPCO/CLECO
DOLET HILLS POWER STATION, MANSFIELD, LA
CRITICAL INFRASTRUCTURE MAP

N
0 1 Miles
0 1 Kilometers

Notes: Critical infrastructure data provided by ESRI

FIGURE 3

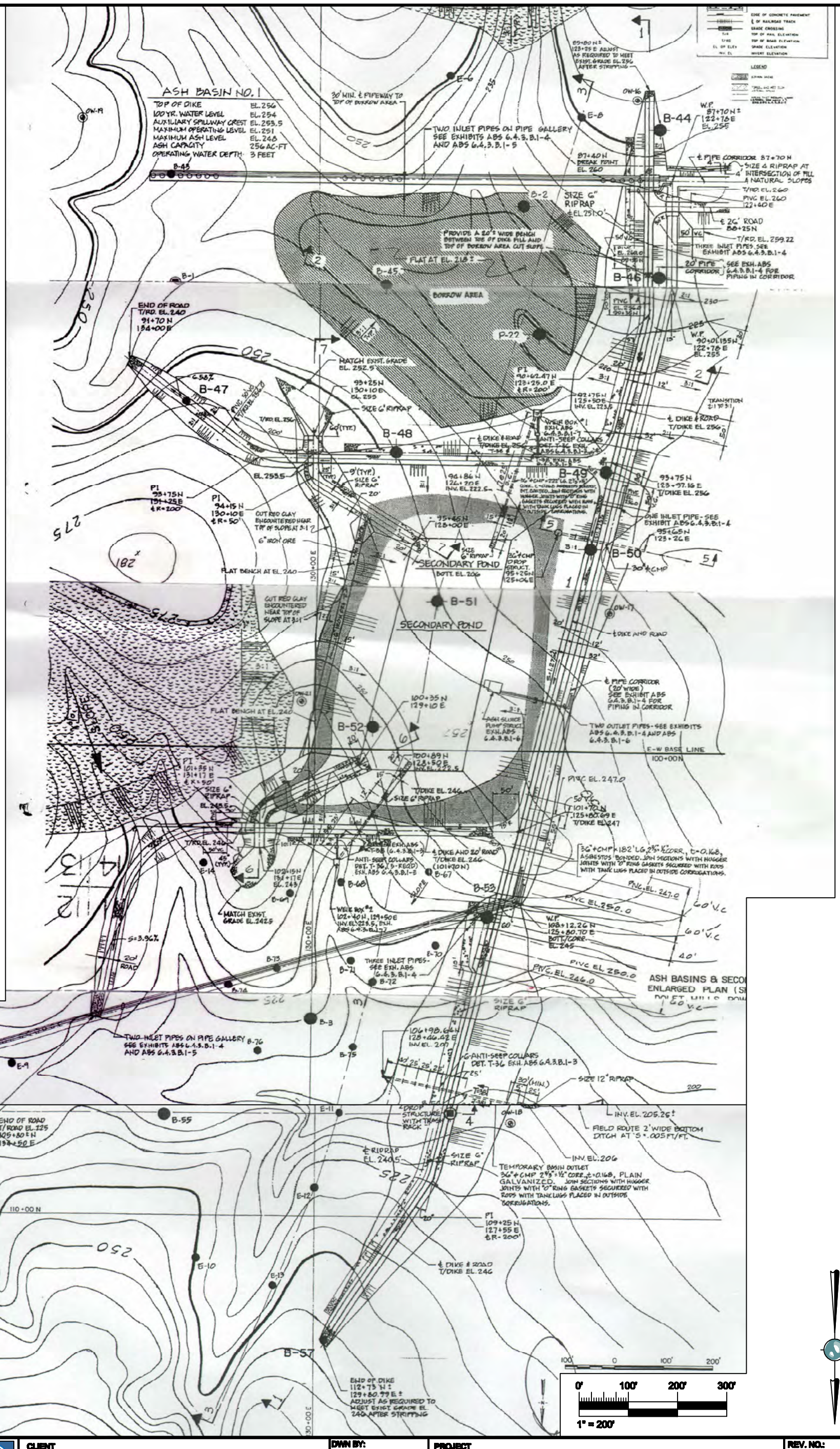

CLIENT LOGO	CLIENT UNITED STATES ENVIRONMENTAL PROTECTION AGENCY	DWN BY: CAE CHK'D BY: MOS	PROJECT ASSESSMENT OF DAM SAFETY OF COAL COMBUSTION SURFACE IMPOUNDMENTS
AMEC Earth & Environmental 690 Commonwealth Center 11003 Bluegrass Parkway Louisville, Ky 40299 (502) 267-0700	amec	DATUM: PROJECTION: SCALE: AS SHOWN	TITLE AEP-SWEPCO/CLECO DOLET HILLS POWER STATION, MANSFIELD, LA BOTTOM ASH PONDS PLAN

REV. NO.:
DATE: 11/5/10
PROJECT NO: 3-2108-0183.0004
FIGURE No. 4

S:\Geosciences\Proposals\EPA Coal Impoundment Inspection\September Round 8\Dolet Hills\Dolet Hills Photos and CAD files\doletfig4_planview.dwg – Layout1 – Nov. 19, 2010 11:37am – chris.eger

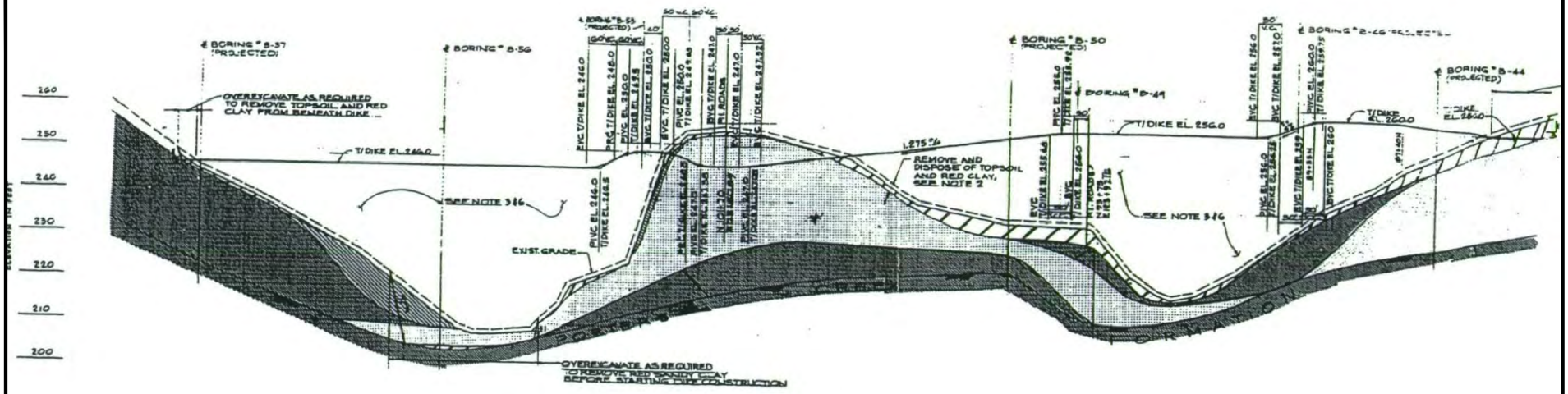

SECTION 1

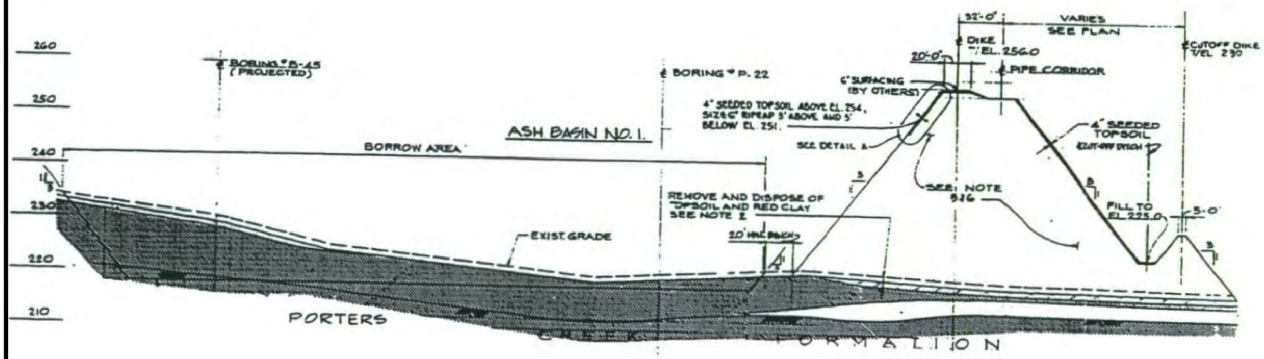

SECTION 2

0' 70' 140' 210'

1" = 140'

CLIENT LOGO	CLIENT UNITED STATES ENVIRONMENTAL PROTECTION AGENCY	DWN BY: CAE CHK'D BY: MOS	PROJECT ASSESSMENT OF DAM SAFETY OF COAL COMBUSTION SURFACE IMPOUNDMENTS	REV. NO.: A DATE: 11/5/10
AMEC Earth & Environmental 690 Commonwealth Center 11003 Bluegrass Parkway Louisville, Ky 40299 (502) 267-0700	amec	DATUM: PROJECTION: SCALE: AS SHOWN	TITLE AEP-SWEPCO/CLECO DOLET HILLS POWER STATION, MANSFIELD, LA BOTTOM ASH PONDS TYPICAL CROSS SECTIONS 1 AND 2	PROJECT NO: 3-2106-0183.0004 FIGURE No. 5

S:\Geosciences\Proposals\EPA Coal Impoundment Inspection\September Round 8\Dolet Hills\Dolet Hills Photos and CAD files\doletfig5_sec1and2.dwg – Layout1 – Nov. 17, 2010 1:30pm – chris.eger

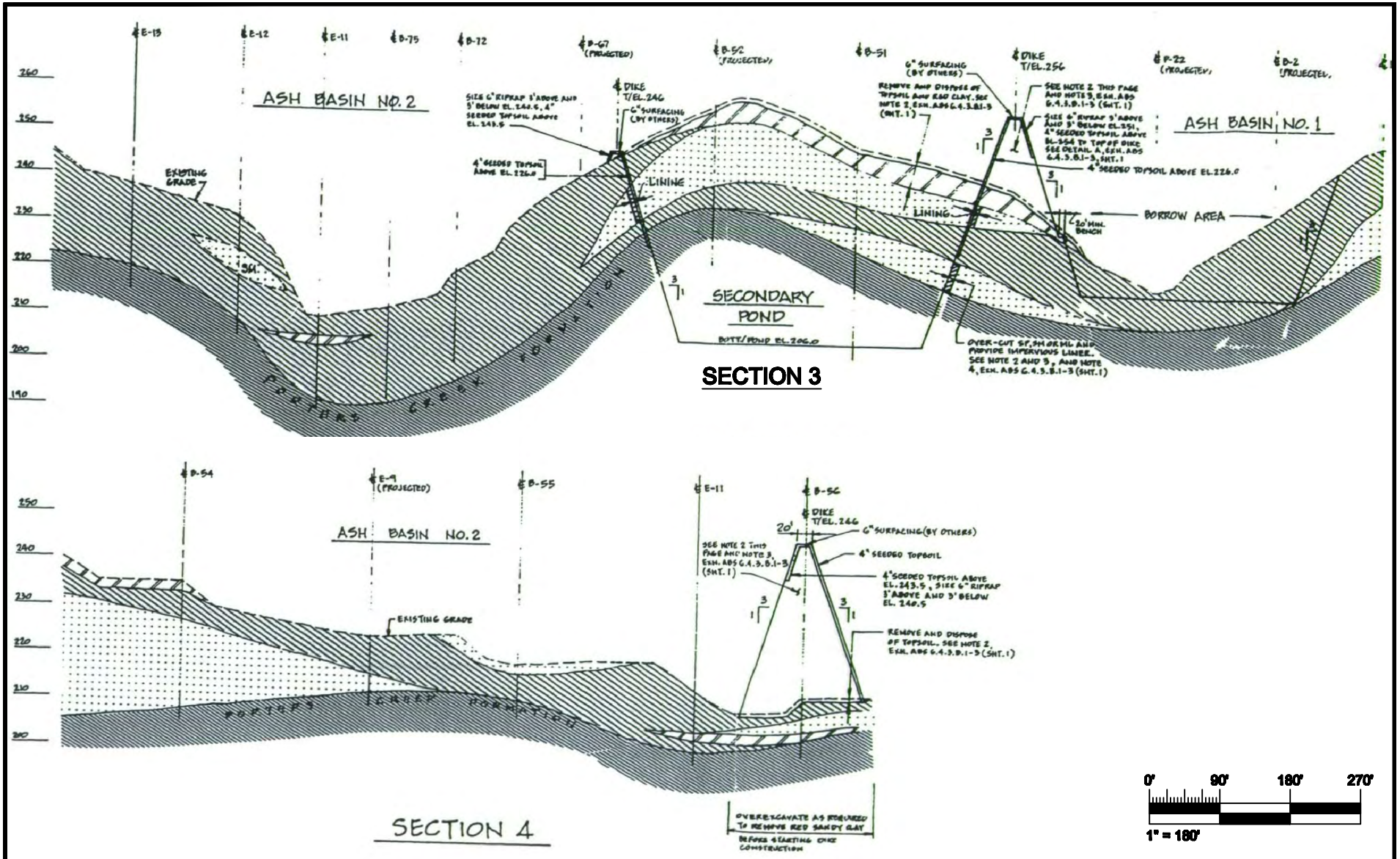

CLIENT LOGO	CLIENT UNITED STATES ENVIRONMENTAL PROTECTION AGENCY	DWN BY: CAE CHK'D BY: MOS	PROJECT ASSESSMENT OF DAM SAFETY OF COAL COMBUSTION SURFACE IMPOUNDMENTS	REV. NO.: A DATE: 11/5/10
AMEC Earth & Environmental 690 Commonwealth Center 11003 Bluegrass Parkway Louisville, Ky 40299 (502) 267-0700	amec	DATUM: PROJECTION: SCALE: AS SHOWN	TITLE AEP-SWEPCO/CLECO DOLET HILLS POWER STATION, MANSFIELD, LA BOTTOM ASH PONDS TYPICAL SECTIONS 3 AND 4	PROJECT NO: 3-2106-0183.0004 FIGURE No. 6

S:\Geosciences\Proposals\EPA Coal Impoundment Inspection\September Round 8\Dolet Hills\Dolet Hills Photos and CAD files\doletfig6_sec3and4.dwg – Layout1 – Nov. 17, 2010 1:31pm – chris.eger

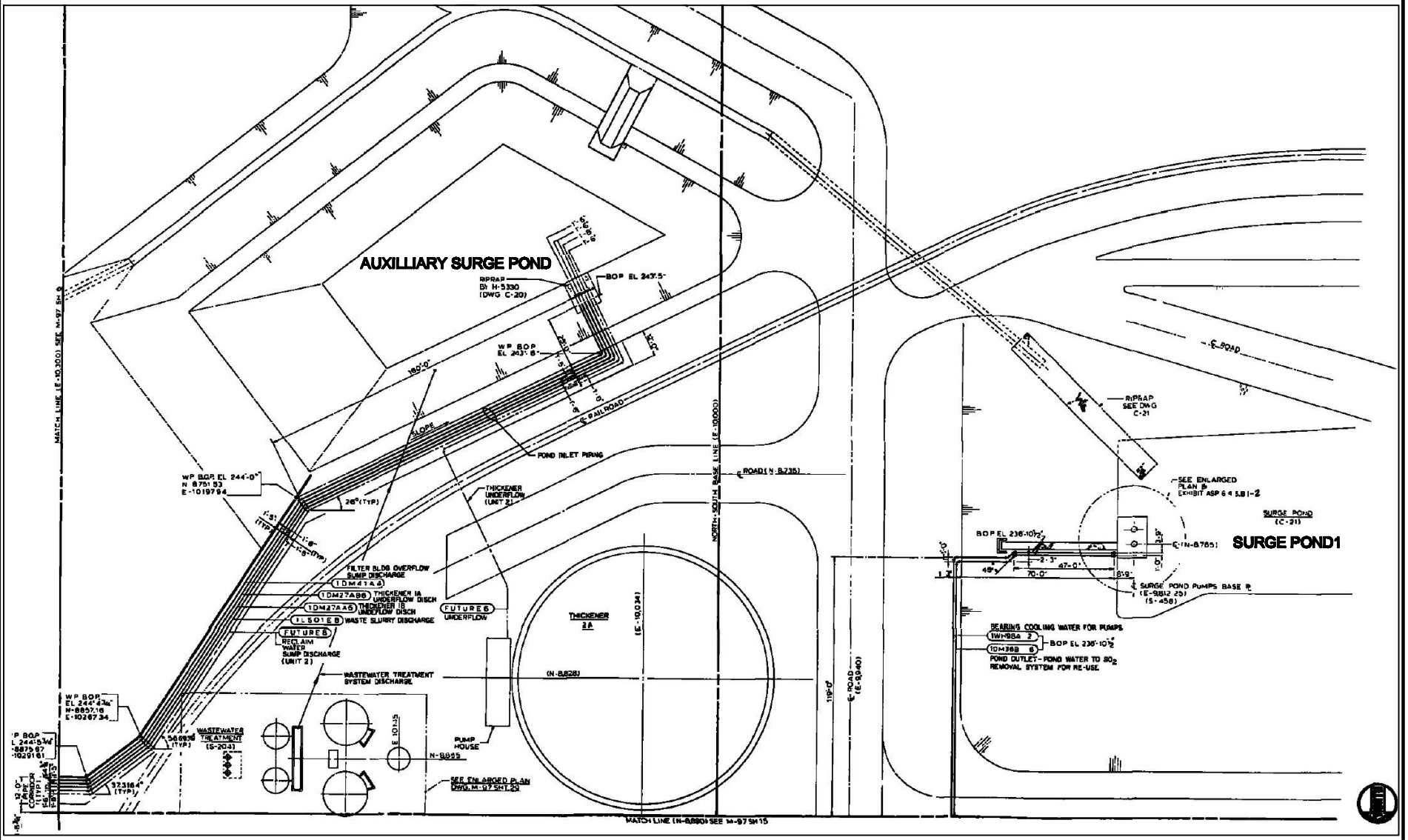

CLIENT LOGO	CLIENT UNITED STATES ENVIRONMENTAL PROTECTION AGENCY	DWN BY: CAE CHK'D BY: MOS	PROJECT ASSESSMENT OF DAM SAFETY OF COAL COMBUSTION SURFACE IMPOUNDMENTS	REV. NO.: A DATE: 11/5/10
AMEC Earth & Environmental 690 Commonwealth Center 11003 Bluegrass Parkway Louisville, Ky 40299 (502) 267-0700	amec	DATUM: PROJECTION: SCALE: NOT TO SCALE	TITLE AEP-SWEPCO/CLECO DOLET HILLS POWER STATION, MANSFIELD, LA AUXILIARY SURGE POND AND SURGE POND 1 PLAN	PROJECT NO: 3-2106-0183.0004 FIGURE No. 7

S:\Geosciences\Proposals\EPA Coal Impoundment Inspection\September Round 8\Dolet Hills\Dolet Hills Photos and CAD files\doletfig7_surgeauxpond.dwg – Layout1 – Nov. 17, 2010 1:38pm – chris.eger

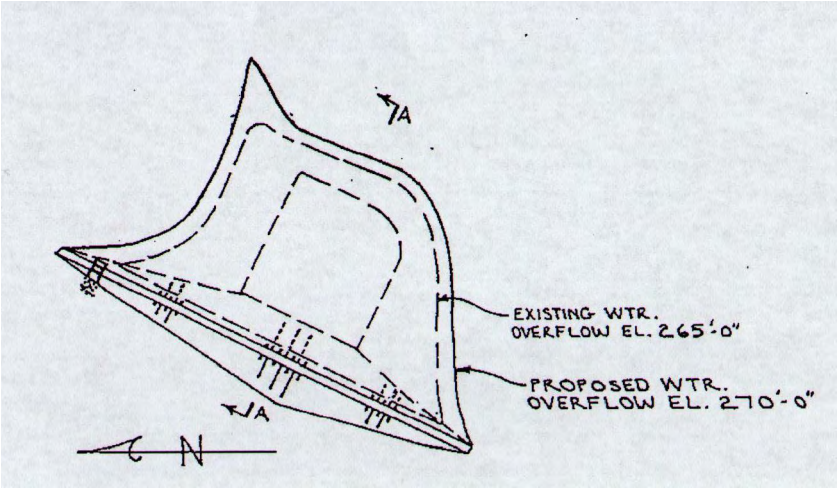

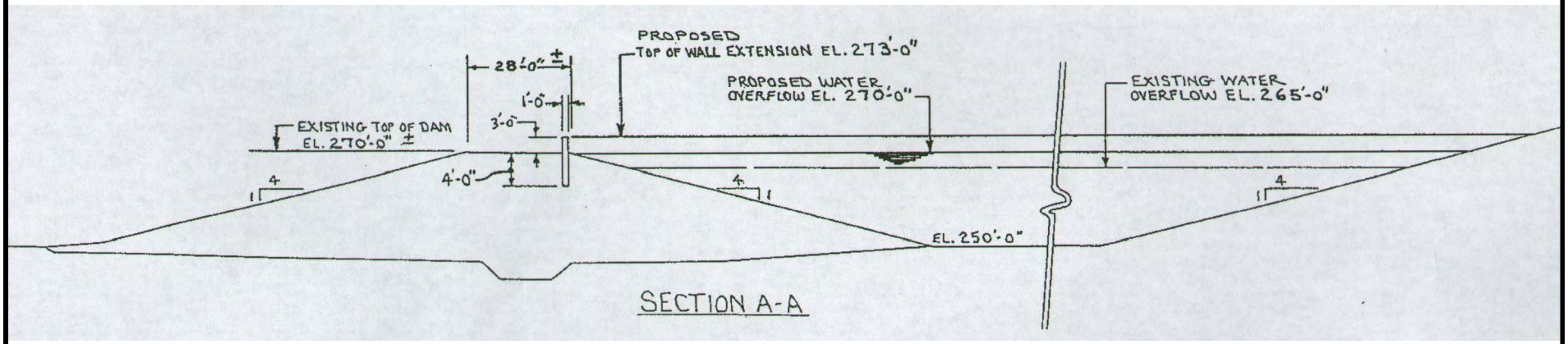

CLIENT LOGO	CLIENT UNITED STATES ENVIRONMENTAL PROTECTION AGENCY	DWN BY: CAE CHK'D BY: MOS	PROJECT ASSESSMENT OF DAM SAFETY OF COAL COMBUSTION SURFACE IMPOUNDMENTS	REV. NO.: A DATE: 11/5/10
AMEC Earth & Environmental 690 Commonwealth Center 11003 Bluegrass Parkway Louisville, Ky 40299 (502) 267-0700	amec	DATUM: PROJECTION: SCALE: NOT TO SCALE	TITLE AEP-SWEPCO/CLECO DOLET HILLS POWER STATION, MANSFIELD, LA FLYASH/FGD LANDFILL RUNOFF POND PLAN AND CROSS SECTION	PROJECT NO: 3-2106-0183.0004 FIGURE No. 8

S:\Geosciences\Proposals\EPA Coal Impoundment Inspection\September Round 8\Dolet Hills\Dolet Hills Photos and CAD files\doletfig8_flyash-fgd.dwg – Layout1 – Nov. 17, 2010 1:38pm – chris.eger

APPENDIX A
Waste Impoundment Inspection Forms

Coal Combustion Dam Inspection Checklist Form

US Environmental Protection Agency

Site Name: Dolet Hills	Date: October 20, 2010
Unit Name: Ash Basin No. 1	Operator's Name: Cleco
Unit I.D.:	Hazard Potential Classification: High Significant **Low**
Inspector's Name: Don Dotson/AMEC and Mary Sawitzki/AMEC	

Check the appropriate box below. Provide comments when appropriate. If not applicable or not available, record "N/A". Any unusual conditions or construction practices that should be noted in the comments section. For large diked embankments, separate checklists may be used for different embankment areas. If separate forms are used, identify approximate area that the form applies to in comments.

	Yes	No		Yes	No
1. Frequency of Company's Dam Inspections?	See Note		18. Sloughing or bulging on slopes?		X
2. Pool elevation (operator records)?	Dry		19. Major erosion or slope deterioration?		X
3. Decant inlet elevation (operator records)?	Unknown		20. Decant Pipes: N/A - SEE NOTE		
4. Open channel spillway elevation (operator records)?	253.5 ft		Is water entering inlet, but not exiting outlet?		
5. Lowest dam crest elevation (operator records)?	256.0 ft		Is water exiting outlet, but not entering inlet?		
6. If instrumentation is present, are readings recorded (operator records)? See Note	X		Is water exiting outlet flowing clear?		
7. Is the embankment currently under construction?		X	21. Seepage (specify location, if seepage carries fines, and approximate seepage rate below):		
8. Foundation preparation (remove vegetation,stumps, topsoil in area where embankment fill will be placed)?	X		From underdrain?		X
9. Trees growing on embankment? (If so, indicate largest diameter below)		X	At isolated points on embankment slopes?		X
10. Cracks or scarps on crest?		X	At natural hillside in the embankment area?		X
11. Is there significant settlement along the crest?		X	Over widespread areas?		X
12. Are decant trashracks clear and in place?	N/A		From downstream foundation area?		X
13. Depressions or sinkholes in tailings surface or whirlpool in the pool area?		X	"Boils" beneath stream or ponded water?		X
14. Clogged spillways, groin or diversion ditches?		X	Around the outside of the decant pipe?		X
15. Are spillway or ditch linings deteriorated?		X	22. Surface movements in valley bottom or on hillside?		X
16. Are outlets of decant or underdrains blocked?	See	note	23. Water against downstream toe?		X
17. Cracks or scarps on slopes?		X	24. Were Photos taken during the dam inspection?	X	

Major adverse changes in these items could cause instability and should be reported for further evaluation. Adverse conditions noted in these items should normally be described (extent, location, volume, etc.) in the space below and on the back of this sheet.

Inspection Issue # Comments

1. Daily log and six-month monitoring reports (including piezometer water surface elevations) by Cleco and annually by state of Louisiana.

6. Various monitoring wells and piezometers around site; read at least every six months according to personnel, unknown Whether recorded

8 .Construction Verification Program – Louisiana Department of Environmental Quality (LDEQ)

16. Not visible

20. Pond was dry and undergoing excavation during site visit. Decant is not performed directly from Ash Basin No. 1, basin is hydraulically connected to Secondary Basin via drop inlet pipe (submerged), decant is from Secondary Basin via pump

U. S. Environmental Protection Agency

Coal Combustion Waste (CCW)
Impoundment Inspection

Impoundment NPDES Permit # LA0062600 AI No.: 585 INSPECTOR: Don Dotson/AMEC
Date October 20, 2010 Mary Sawitzki/AMEC

Impoundment Name: Ash Basin No. 1
Impoundment Company: Cleco Power LLC and AEP-SWEPCO
EPA Region 6
State Agency (Field Office) Address: Louisiana Department of Environmental Quality
Galvez Building 602 N. Fifth St.
Baton Rouge, LA 70802

Name of Impoundment Dolet Hills Ash Basin No. 1
(Report each impoundment on a separate form under the same Impoundment NPDES Permit number)

New X Update _____

	Yes	No
Is impoundment currently under construction?		X
Is water or ccw currently being pumped into the impoundment?		X

IMPOUNDMENT FUNCTION: Receives coal combustion bottom ash sluice from facility

Nearest Downstream Town : Name Goss, LA
Distance from the impoundment approx. 2 miles
Impoundment
Location: Longitude -93 Degrees 33 Minutes 43.6 Seconds
Latitude 32 Degrees 1 Minutes 49.6 Seconds
State LA County DeSoto Parrish

Does a state agency regulate this impoundment? YES X NO _____

If So Which State Agency? Louisiana Department of Environmental Quality

HAZARD POTENTIAL (In the event the impoundment should fail, the following would occur):

_____**LESS THAN LOW HAZARD POTENTIAL:** Failure or misoperation of the dam results in no probable loss of human life or economic or environmental losses.

__X__**LOW HAZARD POTENTIAL:** Dams assigned the low hazard potential classification are those where failure or misoperation results in no probable loss of human life and low economic and/or environmental losses. Losses are principally limited to the owner's property.

_____**SIGNIFICANT HAZARD POTENTIAL:** Dams assigned the significant hazard potential classification are those dams where failure or misoperation results in no probable loss of human life but can cause economic loss, environmental damage, disruption of lifeline facilities, or can impact other concerns. Significant hazard potential classification dams are often located in predominantly rural or agricultural areas but could be located in areas with population and significant infrastructure.

_____**HIGH HAZARD POTENTIAL:** Dams assigned the high hazard potential classification are those where failure or misoperation will probably cause loss of human life.

DESCRIBE REASONING FOR HAZARD RATING CHOSEN:

Low economic/environmental impact, primarily to owner's property

CONFIGURATION:

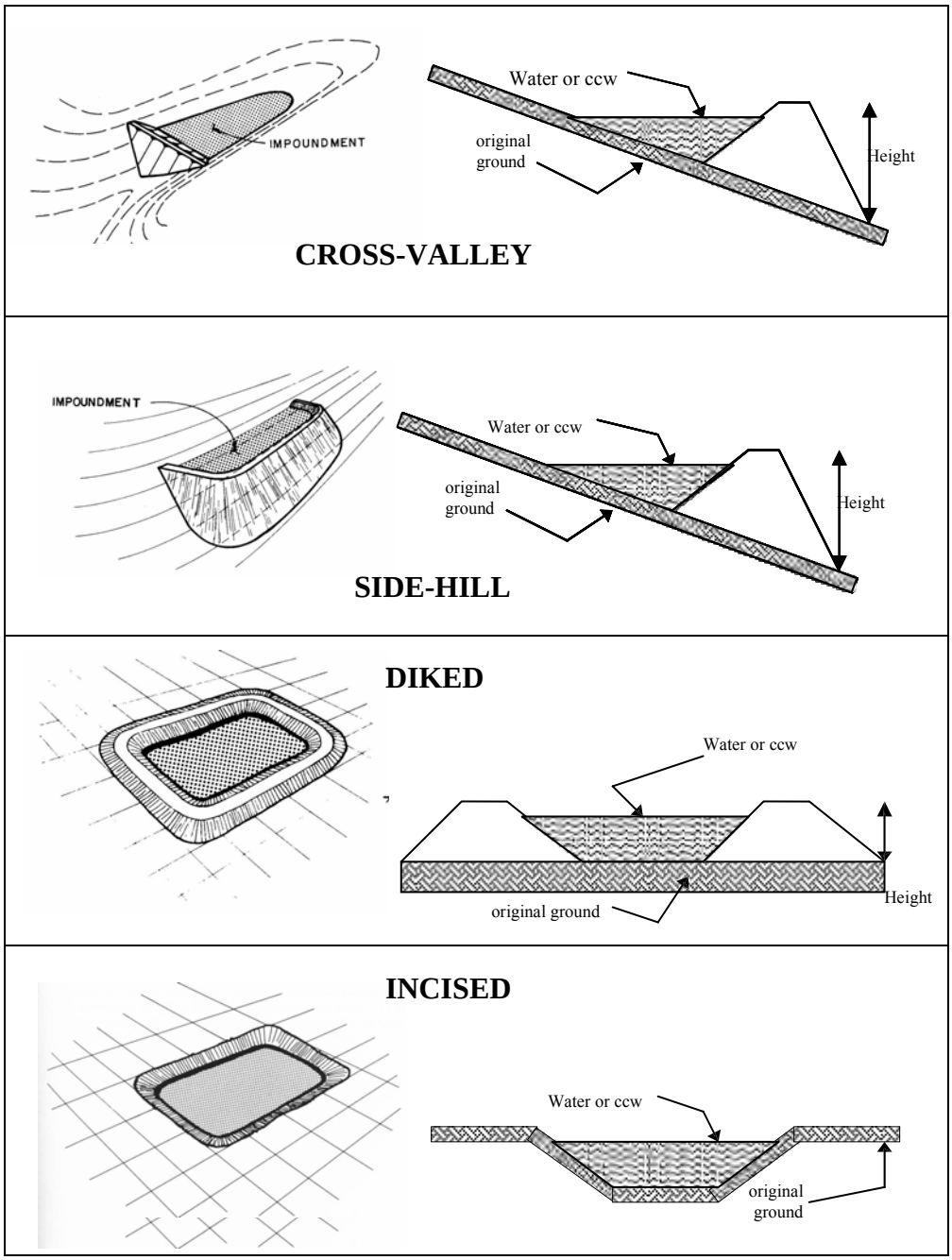

__X__Cross-Valley
__X__Side-Hill
_____Diked
_____Incised (form completion optional)
_____Combination Incised/Diked

Embankment Height __35.8_____feet Embankment Material__unknown
Pool Area _____30_____ acres Liner _equivalent to three ft. natural clay_
Current Freeboard ____dry_____ feet Liner Permeability _<1X10-7 cm/sec___

TYPE OF OUTLET (Mark all that apply)

_____**Open Channel Spillway**
_____Trapezoidal
_____Triangular
_____Rectangular
_____Irregular

_____depth
_____bottom (or average) width
_____top width
_____

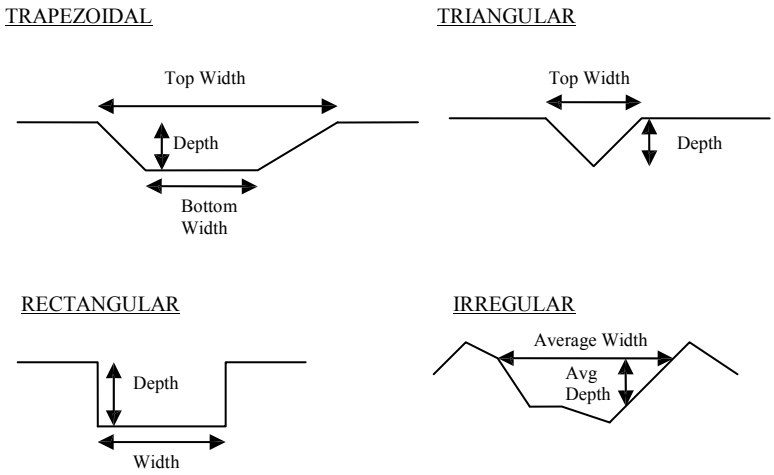

_____**Outlet**

_____inside diameter

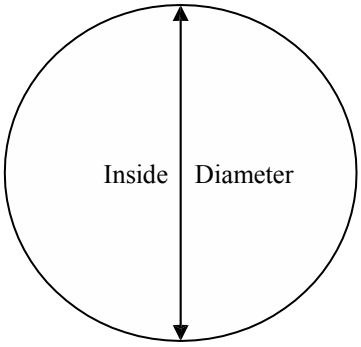

Material
_____corrugated metal
_____welded steel
_____concrete
_____plastic (hdpe, pvc, etc.)
_____other (specify) _____

_____
Is water flowing through the outlet? YES _____ NO __X____

_____**No Outlet**

_____

__X__**Other Type of Outlet** (specify) Hydraulic connection via vertical riser w/ stop log decant elevation control and pipe to Secondary Basin, pond dry at site visit

The Impoundment was Designed By Sargent & Lundy
_____

Has there ever been a failure at this site? YES _____NO ___X_____

If So When? _____

If So Please Describe : _____

Has there ever been significant seepages at this site? YES _____NO __X____

If So When? _____

IF So Please Describe: _____

Has there ever been any measures undertaken to monitor/lower Phreatic water table levels based on past seepages or breaches at this site? YES _____NO __X____

If so, which method (e.g., piezometers, gw pumping,...)? _____

If so Please Describe : _____

Coal Combustion Dam Inspection Checklist Form

US Environmental Protection Agency

Site Name: Dolet Hills	Date: October 20, 2010
Unit Name: Ash Basin No. 2	Operator's Name: Cleco
Unit I.D.:	Hazard Potential Classification: High Significant **Low**
Inspector's Name: Don Dotson/AMEC and Mary Sawitzki/AMEC	

Check the appropriate box below. Provide comments when appropriate. If not applicable or not available, record "N/A". Any unusual conditions or construction practices that should be noted in the comments section. For large diked embankments, separate checklists may be used for different embankment areas. If separate forms are used, identify approximate area that the form applies to in comments.

	Yes	No		Yes	No
1. Frequency of Company's Dam Inspections?	See Note		18. Sloughing or bulging on slopes?		X
2. Pool elevation (operator records)?	See Note		19. Major erosion or slope deterioration?		X
3. Decant inlet elevation (operator records)?	unknown		20. Decant Pipes: SEE NOTE		
4. Open channel spillway elevation (operator records)?	243.5 ft		Is water entering inlet, but not exiting outlet?		
5. Lowest dam crest elevation (operator records)?	246.0 ft		Is water exiting outlet, but not entering inlet?		
6. If instrumentation is present, are readings recorded (operator records)?	X		Is water exiting outlet flowing clear?		
7. Is the embankment currently under construction?		X	21. Seepage (specify location, if seepage carries fines, and approximate seepage rate below):		
8. Foundation preparation (remove vegetation,stumps, topsoil in area where embankment fill will be placed)?	X		From underdrain?		X
9. Trees growing on embankment? (If so, indicate largest diameter below)		X	At isolated points on embankment slopes?		X
10. Cracks or scarps on crest?		X	At natural hillside in the embankment area?		X
11. Is there significant settlement along the crest?		X	Over widespread areas?		X
12. Are decant trashracks clear and in place?	N/A		From downstream foundation area?		X
13. Depressions or sinkholes in tailings surface or whirlpool in the pool area?		X	"Boils" beneath stream or ponded water?		X
14. Clogged spillways, groin or diversion ditches?	X		Around the outside of the decant pipe?		X
15. Are spillway or ditch linings deteriorated?		X	22. Surface movements in valley bottom or on hillside?		X
16. Are outlets of decant or underdrains blocked?		X	23. Water against downstream toe?		X
17. Cracks or scarps on slopes?		X	24. Were Photos taken during the dam inspection?	X	

Major adverse changes in these items could cause instability and should be reported for further evaluation. Adverse conditions noted in these items should normally be described (extent, location, volume, etc.) in the space below and on the back of this sheet.

Inspection Issue # Comments

1. Daily log and six-month monitoring reports (including piezometer water surface elevations) by Cleco and annually by state of Louisiana.
2. Pond specifications note high operating water-level is 240.5 ft, actual water surface elevation during site visit unknown

6. Various monitoring wells and piezometers around site; read at least every six months according to personnel

14. Dual large diameter storm drain culvert pair at northern downstream toe – northern most culvert 50 percent clogged.

20. Decant from vertical riser w/ stop log level adjustment, could not determine if water flowing, decant flows to Secondary basin, entrance submerged

U. S. Environmental Protection Agency

Coal Combustion Waste (CCW)
Impoundment Inspection

Impoundment NPDES Permit # LA0062600 AI No.: 585 INSPECTOR: Don Dotson/AMEC
Date October 20, 2010 Mary Sawitzki/AMEC

Impoundment Name: Ash Basin No. 2
Impoundment Company: Cleco Power LLC and AEP-SWEPCO
EPA Region 6
State Agency (Field Office) Address: Louisiana Department of Environmental Quality
Galvez Building 602 N. Fifth St.
Baton Rouge, LA 70802

Name of Impoundment Dolet Hills Ash Basin No. 2
(Report each impoundment on a separate form under the same Impoundment NPDES Permit number)

New X Update _____

	Yes	No
Is impoundment currently under construction?		X
Is water or ccw currently being pumped into the impoundment?	X	

IMPOUNDMENT FUNCTION: Receives coal combustion bottom ash sluiced from facility

Nearest Downstream Town : Name Goss, LA
Distance from the impoundment approx. 2 miles
Impoundment
Location: Longitude -93 Degrees 33 Minutes 38.9 Seconds
Latitude 32 Degrees 2 Minutes 7.8 Seconds
State LA County DeSoto Parrish

Does a state agency regulate this impoundment? YES X NO _____

If So Which State Agency? Louisiana Department of Environmental Quality

HAZARD POTENTIAL (In the event the impoundment should fail, the following would occur):

_____**LESS THAN LOW HAZARD POTENTIAL:** Failure or misoperation of the dam results in no probable loss of human life or economic or environmental losses.

__X__**LOW HAZARD POTENTIAL:** Dams assigned the low hazard potential classification are those where failure or misoperation results in no probable loss of human life and low economic and/or environmental losses. Losses are principally limited to the owner's property.

_____**SIGNIFICANT HAZARD POTENTIAL:** Dams assigned the significant hazard potential classification are those dams where failure or misoperation results in no probable loss of human life but can cause economic loss, environmental damage, disruption of lifeline facilities, or can impact other concerns. Significant hazard potential classification dams are often located in predominantly rural or agricultural areas but could be located in areas with population and significant infrastructure.

_____**HIGH HAZARD POTENTIAL:** Dams assigned the high hazard potential classification are those where failure or misoperation will probably cause loss of human life.

DESCRIBE REASONING FOR HAZARD RATING CHOSEN:

Low economic/environmental impact, primarily to owner's property

CONFIGURATION:

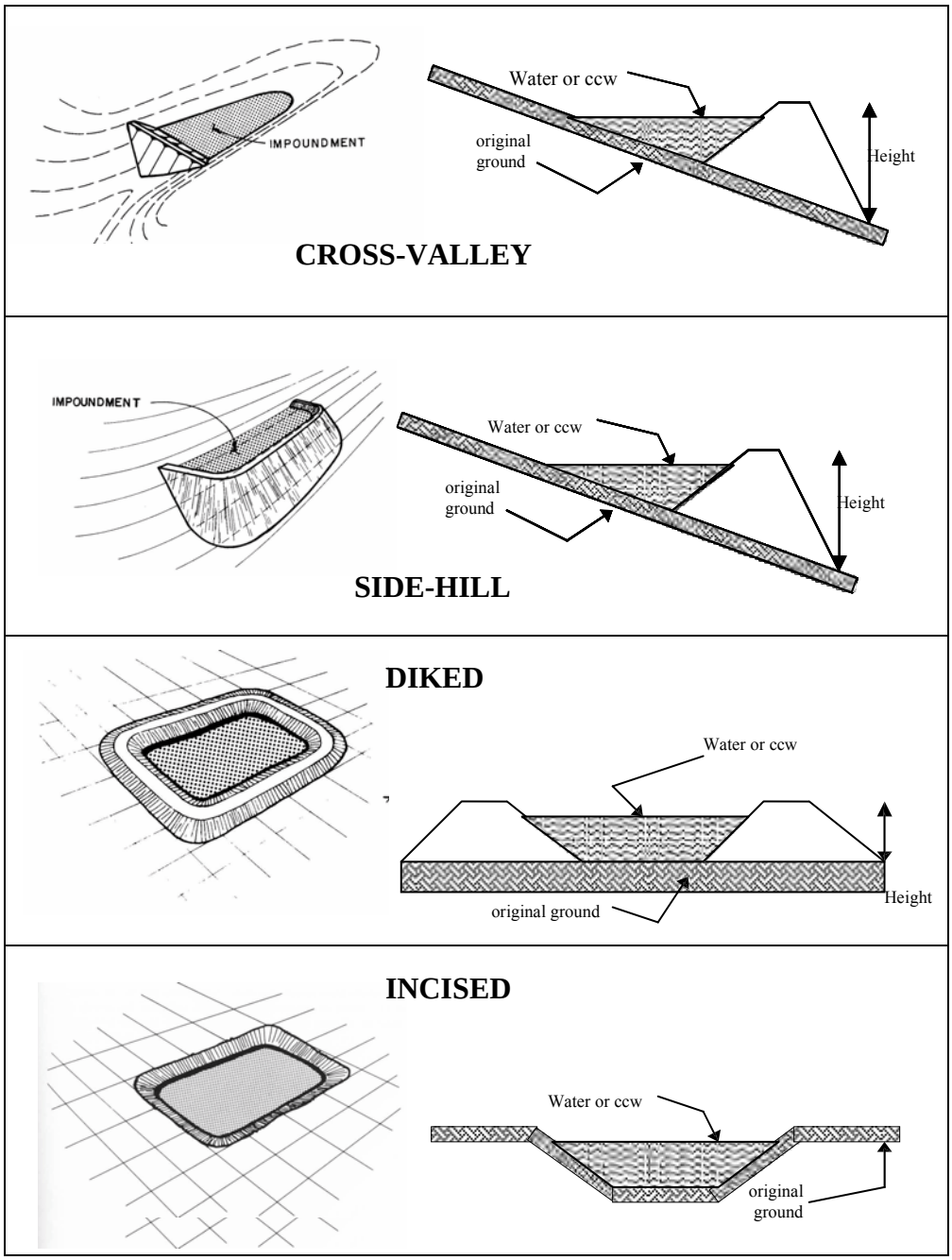

__X__Cross-Valley
_____Side-Hill
_____Diked
_____Incised (form completion optional)
_____Combination Incised/Diked

Embankment Height ___30.4____feet Embankment Material unknown_____
Pool Area _____31_____ acres Liner equivalent to three ft. natural clay
Current Freeboard 2 to 3 ft_____ feet Liner Permeability `_____

TYPE OF OUTLET (Mark all that apply)

_____**Open Channel Spillway**
_____Trapezoidal
_____Triangular
_____Rectangular
_____Irregular

_____depth
_____bottom (or average) width
_____top width
_____

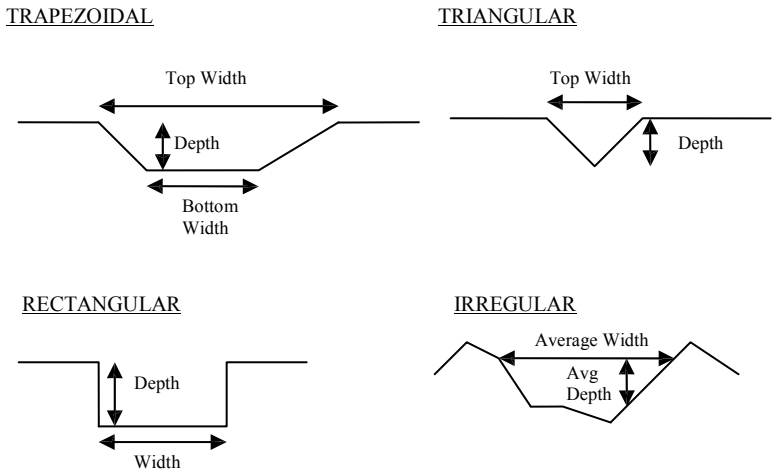

_____**Outlet**

_____inside diameter

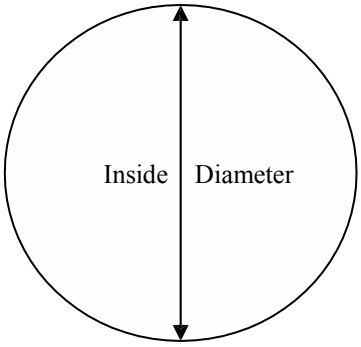

Material
_____corrugated metal
_____welded steel
_____concrete
_____plastic (hdpe, pvc, etc.)
_____other (specify) _____

_____

Is water flowing through the outlet? YES _____ NO _____
(unknown, submerged)

_____**No Outlet**

_____

__X__**Other Type of Outlet** (specify) Hydraulic connection via vertical riser w/ stop log decant elevation control and pipe to Secondary Basin, submerged

The Impoundment was Designed By Sargent & Lundy

Has there ever been a failure at this site? YES _____NO ___X_____

If So When? _____

If So Please Describe : _____

Has there ever been significant seepages at this site? YES _____NO ___X[1]___

If So When? _____

IF So Please Describe: _____

1 Mistakely marked YES in originally submitted forms and those submitted with November 2010 Draft Report, correction made to NO for FINAL report submitted in May 2011.

Has there ever been any measures undertaken to monitor/lower Phreatic water table levels based on past seepages or breaches at this site? YES _____NO ___X____

If so, which method (e.g., piezometers, gw pumping,...)? _____

If so Please Describe : _____

Coal Combustion Dam Inspection Checklist Form

US Environmental Protection Agency

Site Name: Dolet Hills	Date: October 20, 2010
Unit Name: Secondary Basin	Operator's Name: Cleco
Unit I.D.:	Hazard Potential Classification: High Significant **Low**
Inspector's Name: Don Dotson/AMEC and Mary Sawitzki/AMEC	

Check the appropriate box below. Provide comments when appropriate. If not applicable or not available, record "N/A". Any unusual conditions or construction practices that should be noted in the comments section. For large diked embankments, separate checklists may be used for different embankment areas. If separate forms are used, identify approximate area that the form applies to in comments.

	Yes	No		Yes	No
1. Frequency of Company's Dam Inspections?	See Note		18. Sloughing or bulging on slopes?		X
2. Pool elevation (operator records)?	See Note		19. Major erosion or slope deterioration?		X
3. Decant inlet elevation (operator records)?	See Note		20. Decant Pipes: SEE NOTE		
4. Open channel spillway elevation (operator records)?	N/A		Is water entering inlet, but not exiting outlet?		
5. Lowest dam crest elevation (operator records)?	246.0 ft		Is water exiting outlet, but not entering inlet?		
6. If instrumentation is present, are readings recorded (operator records)?	X		Is water exiting outlet flowing clear?		
7. Is the embankment currently under construction?		X	21. Seepage (specify location, if seepage carries fines, and approximate seepage rate below):		
8. Foundation preparation (remove vegetation,stumps, topsoil in area where embankment fill will be placed)?	X		From underdrain?		X
9. Trees growing on embankment? (If so, indicate largest diameter below)		X	At isolated points on embankment slopes?		X
10. Cracks or scarps on crest?		X	At natural hillside in the embankment area?		X
11. Is there significant settlement along the crest?		X	Over widespread areas?		X
12. Are decant trash racks clear and in place?	N/A		From downstream foundation area?		X
13. Depressions or sinkholes in tailings surface or whirlpool in the pool area?		X	"Boils" beneath stream or ponded water?		X
14. Clogged spillways, groin or diversion ditches?		X	Around the outside of the decant pipe?		X
15. Are spillway or ditch linings deteriorated?		X	22. Surface movements in valley bottom or on hillside?		X
16. Are outlets of decant or underdrains blocked?		X	23. Water against downstream toe?		X
17. Cracks or scarps on slopes?		X	24. Were Photos taken during the dam inspection?	X	

Major adverse changes in these items could cause instability and should be reported for further evaluation. Adverse conditions noted in these items should normally be described (extent, location, volume, etc.) in the space below and on the back of this sheet.

Inspection Issue #	Comments
1.	Daily log and six-month monitoring reports (including piezometer water surface elevations) by Cleco and annually by state of Louisiana.
2.	Pond specifications note high operating water level is 226.5 ft, actual water surface elevation during site visit unknown
3.	Discharge from Secondary Basin is pumped to facility as reuse or to open channel/swale for LPDES permitted outfall 002, pump suction elevation unknown
6.	Various monitoring wells and piezometers around site; read at least every six months according to personnel
20.	Decant from Secondary Basin was not in service during site visit

U. S. Environmental Protection Agency

Coal Combustion Waste (CCW)
Impoundment Inspection

Impoundment NPDES Permit # LA0062600 AI No.: 585 INSPECTOR: Don Dotson/AMEC
Date October 20, 2010 Mary Sawitzki/AMEC

Impoundment Name: Secondary Basin
Impoundment Company: Cleco Power LLC and AEP-SWEPCO
EPA Region 6
State Agency (Field Office) Address: Louisiana Department of Environmental Quality
Galvez Building 602 N. Fifth St.
Baton Rouge, LA 70802

Name of Impoundment Dolet Hills Secondary Basin
(Report each impoundment on a separate form under the same Impoundment NPDES Permit number)

New X Update _____

	Yes	No
Is impoundment currently under construction?		X
Is water or ccw currently being pumped into the impoundment? (gravity flowing from Ash Basin No. 2)	X	

IMPOUNDMENT FUNCTION: Receives decant from Bottom Ash Basins No. 1 & No. 2, decants/discharges via pump for reuse at facility or to LPDES Outfall #002

Nearest Downstream Town : Name Goss, LA
Distance from the impoundment approx. 2 miles
Impoundment
Location: Longitude -93 Degrees 33 Minutes 43.5 Seconds
Latitude 32 Degrees 1 Minutes 58 Seconds
State LA County DeSoto Parrish

Does a state agency regulate this impoundment? YES X NO _____

If So Which State Agency? Louisiana Department of Environmental Quality

HAZARD POTENTIAL (In the event the impoundment should fail, the following would occur):

_____**LESS THAN LOW HAZARD POTENTIAL:** Failure or misoperation of the dam results in no probable loss of human life or economic or environmental losses.

__X__**LOW HAZARD POTENTIAL:** Dams assigned the low hazard potential classification are those where failure or misoperation results in no probable loss of human life and low economic and/or environmental losses. Losses are principally limited to the owner's property.

_____**SIGNIFICANT HAZARD POTENTIAL:** Dams assigned the significant hazard potential classification are those dams where failure or misoperation results in no probable loss of human life but can cause economic loss, environmental damage, disruption of lifeline facilities, or can impact other concerns. Significant hazard potential classification dams are often located in predominantly rural or agricultural areas but could be located in areas with population and significant infrastructure.

_____**HIGH HAZARD POTENTIAL:** Dams assigned the high hazard potential classification are those where failure or misoperation will probably cause loss of human life.

DESCRIBE REASONING FOR HAZARD RATING CHOSEN:

Low economic/environmental impact, primarily to owner's property

CONFIGURATION:

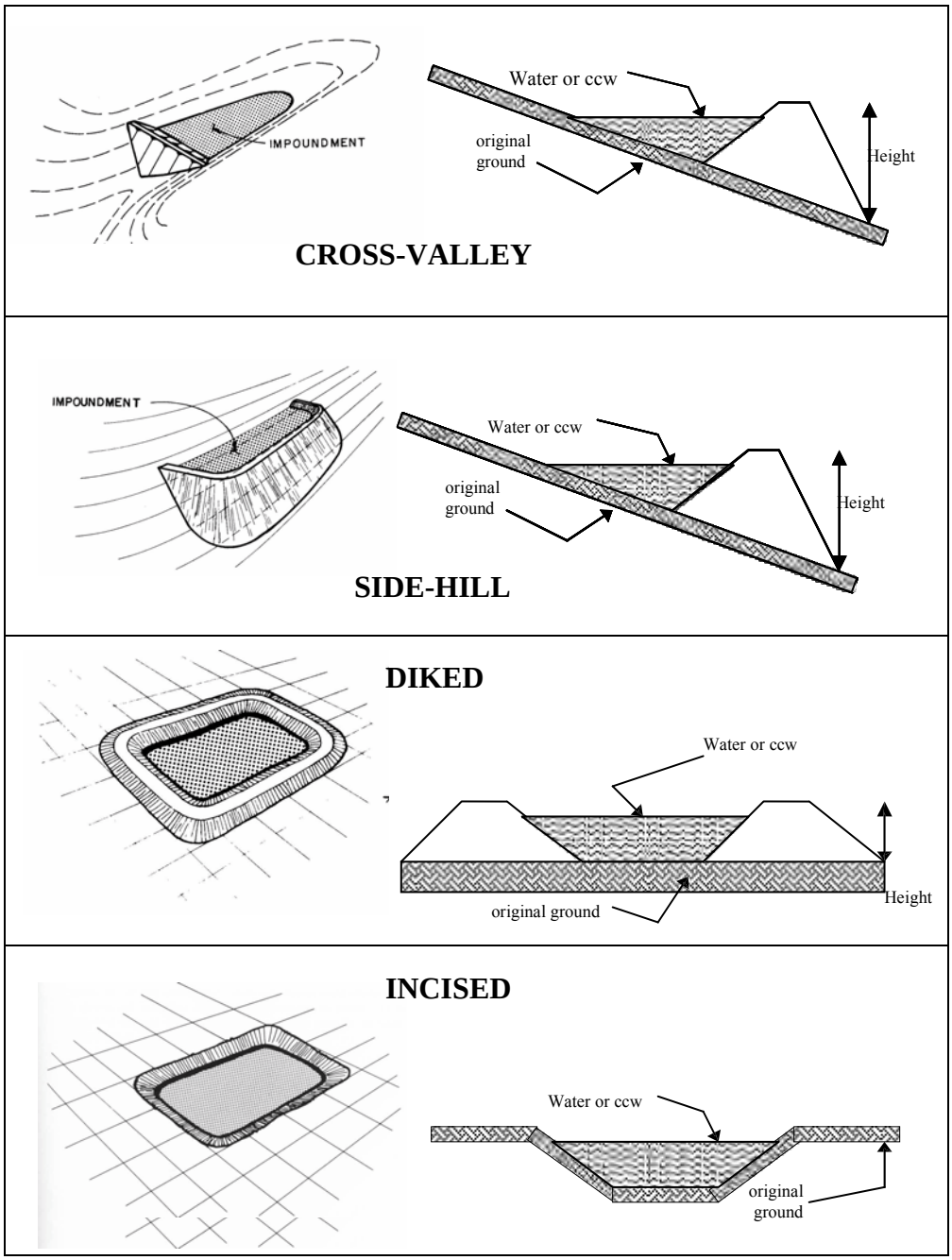

_____Cross-Valley
__X__Side-Hill (centered between Bottom Ash Basins 1 & 2, shares side embankments)
_____Diked
_____Incised (form completion optional)
_____Combination Incised/Diked

Embankment Height ____39.8____ feet Embankment Material unknown
Pool Area _____6.5___ acres Liner equivalent to three ft. natural clay
Current Freeboard ~ 20 ft to crest feet Liner Permeability <1X10-7 cm/sec

_____

TYPE OF OUTLET (Mark all that apply)

_____**Open Channel Spillway**
_____Trapezoidal
_____Triangular
_____Rectangular
_____Irregular

_____depth
_____bottom (or average) width
_____top width

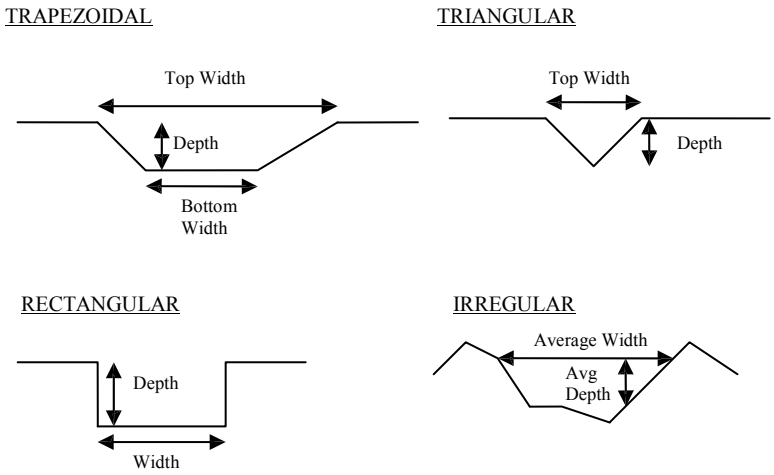

_____**Outlet**

_____inside diameter

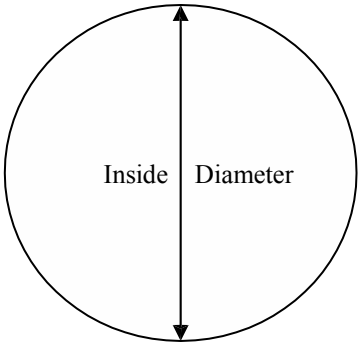

Material
_____corrugated metal
_____welded steel
_____concrete
_____plastic (hdpe, pvc, etc.)
_____other (specify) _____

Is water flowing through the outlet? YES _____ NO _X_____

_____**No Outlet**

__X__**Other Type of Outlet** (specify) pump

The Impoundment was Designed By Sargent & Lundy

Has there ever been a failure at this site? YES _____NO ____X_____

If So When? _____

If So Please Describe : _____

Has there ever been significant seepages at this site? YES _____NO ___X___

If So When? _____

IF So Please Describe: _____

Has there ever been any measures undertaken to monitor/lower Phreatic water table levels based on past seepages or breaches at this site? YES _____NO __X____

If so, which method (e.g., piezometers, gw pumping,...)? _____

If so Please Describe : _____

Coal Combustion Dam Inspection Checklist Form

US Environmental Protection Agency

Site Name: Dolet Hills	Date: October 20, 2010
Unit Name: Auxiliary Surge Pond	Operator's Name: Cleco
Unit I.D.:	Hazard Potential Classification: High Significant **Low**
Inspector's Name: Don Dotson/AMEC and Mary Sawitzki/AMEC	

Check the appropriate box below. Provide comments when appropriate. If not applicable or not available, record "N/A". Any unusual conditions or construction practices that should be noted in the comments section. For large diked embankments, separate checklists may be used for different embankment areas. If separate forms are used, identify approximate area that the form applies to in comments.

	Yes	No		Yes	No
1. Frequency of Company's Dam Inspections?	See Note		18. Sloughing or bulging on slopes?		X
2. Pool elevation (operator records)?	241.7 ft		19. Major erosion or slope deterioration?		X
3. Decant inlet elevation (operator records)?	N/A		20. Decant Pipes: N/A		
4. Open channel spillway elevation (operator records)?	unknown		Is water entering inlet, but not exiting outlet?		
5. Lowest dam crest elevation (operator records)?	243.0 ft		Is water exiting outlet, but not entering inlet?		
6. If instrumentation is present, are readings recorded (operator records)? SEE NOTE	X		Is water exiting outlet flowing clear?		
7. Is the embankment currently under construction?		X	21. Seepage (specify location, if seepage carries fines, and approximate seepage rate below):		
8. Foundation preparation (remove vegetation,stumps, topsoil in area where embankment fill will be placed)?	See	Note	From underdrain?		X
9. Trees growing on embankment? (If so, indicate largest diameter below)		X	At isolated points on embankment slopes?		X
10. Cracks or scarps on crest?		X	At natural hillside in the embankment area?		X
11. Is there significant settlement along the crest?		X	Over widespread areas?		X
12. Are decant trashracks clear and in place?	N/A		From downstream foundation area?		X
13. Depressions or sinkholes in tailings surface or whirlpool in the pool area?		X	"Boils" beneath stream or ponded water?		X
14. Clogged spillways, groin or diversion ditches?		X	Around the outside of the decant pipe?		X
15. Are spillway or ditch linings deteriorated?		X	22. Surface movements in valley bottom or on hillside?		X
16. Are outlets of decant or underdrains blocked?		X	23. Water against downstream toe?		X
17. Cracks or scarps on slopes?		X	24. Were Photos taken during the dam inspection?	X	

Major adverse changes in these items could cause instability and should be reported for further evaluation. Adverse conditions noted in these items should normally be described (extent, location, volume, etc.) in the space below and on the back of this sheet.

Inspection Issue #	Comments
1.	Daily log and six-month monitoring reports (including piezometer water surface elevations) by Cleco and annually by state of Louisiana.
6.	Various monitoring wells and piezometers around site; read at least every six months according to personnel
8.	Unknown

U. S. Environmental Protection Agency

Coal Combustion Waste (CCW)
Impoundment Inspection

Impoundment NPDES Permit # LA0062600 AI No.: 585 INSPECTOR: Don Dotson/AMEC
Date October 20, 2010 Mary Sawitzki/AMEC

Impoundment Name: Auxiliary Surge Pond
Impoundment Company: Cleco Power LLC and AEP-SWEPCO
EPA Region 6
State Agency (Field Office) Address: Louisiana Department of Environmental Quality
Galvez Building 602 N. Fifth St.
Baton Rouge, LA 70802

Name of Impoundment Dolet Hills Auxiliary Surge Pond
(Report each impoundment on a separate form under the same Impoundment NPDES Permit number)

New X Update _____

	Yes	No
Is impoundment currently under construction?		X
Is water or ccw currently being pumped into the impoundment?	X	

IMPOUNDMENT FUNCTION: Receives flue gas desulfurization process discharge from facility (FGD sludge, ash and sluice water)

Nearest Downstream Town : Name Goss, LA
Distance from the impoundment approx. 2 miles
Impoundment
Location: Longitude -93 Degrees 34 Minutes 13.9 Seconds
Latitude 32 Degrees 1 Minutes 46.7 Seconds
State LA County DeSoto Parrish

Does a state agency regulate this impoundment? YES X NO _____

If So Which State Agency? Louisiana Department of Environmental Quality

HAZARD POTENTIAL (In the event the impoundment should fail, the following would occur):

_____**LESS THAN LOW HAZARD POTENTIAL:** Failure or misoperation of the dam results in no probable loss of human life or economic or environmental losses.

__X__**LOW HAZARD POTENTIAL:** Dams assigned the low hazard potential classification are those where failure or misoperation results in no probable loss of human life and low economic and/or environmental losses. Losses are principally limited to the owner's property.

_____**SIGNIFICANT HAZARD POTENTIAL:** Dams assigned the significant hazard potential classification are those dams where failure or misoperation results in no probable loss of human life but can cause economic loss, environmental damage, disruption of lifeline facilities, or can impact other concerns. Significant hazard potential classification dams are often located in predominantly rural or agricultural areas but could be located in areas with population and significant infrastructure.

_____**HIGH HAZARD POTENTIAL:** Dams assigned the high hazard potential classification are those where failure or misoperation will probably cause loss of human life.

DESCRIBE REASONING FOR HAZARD RATING CHOSEN:

Low economic/environmental impact, primarily to owner's property

CONFIGURATION:

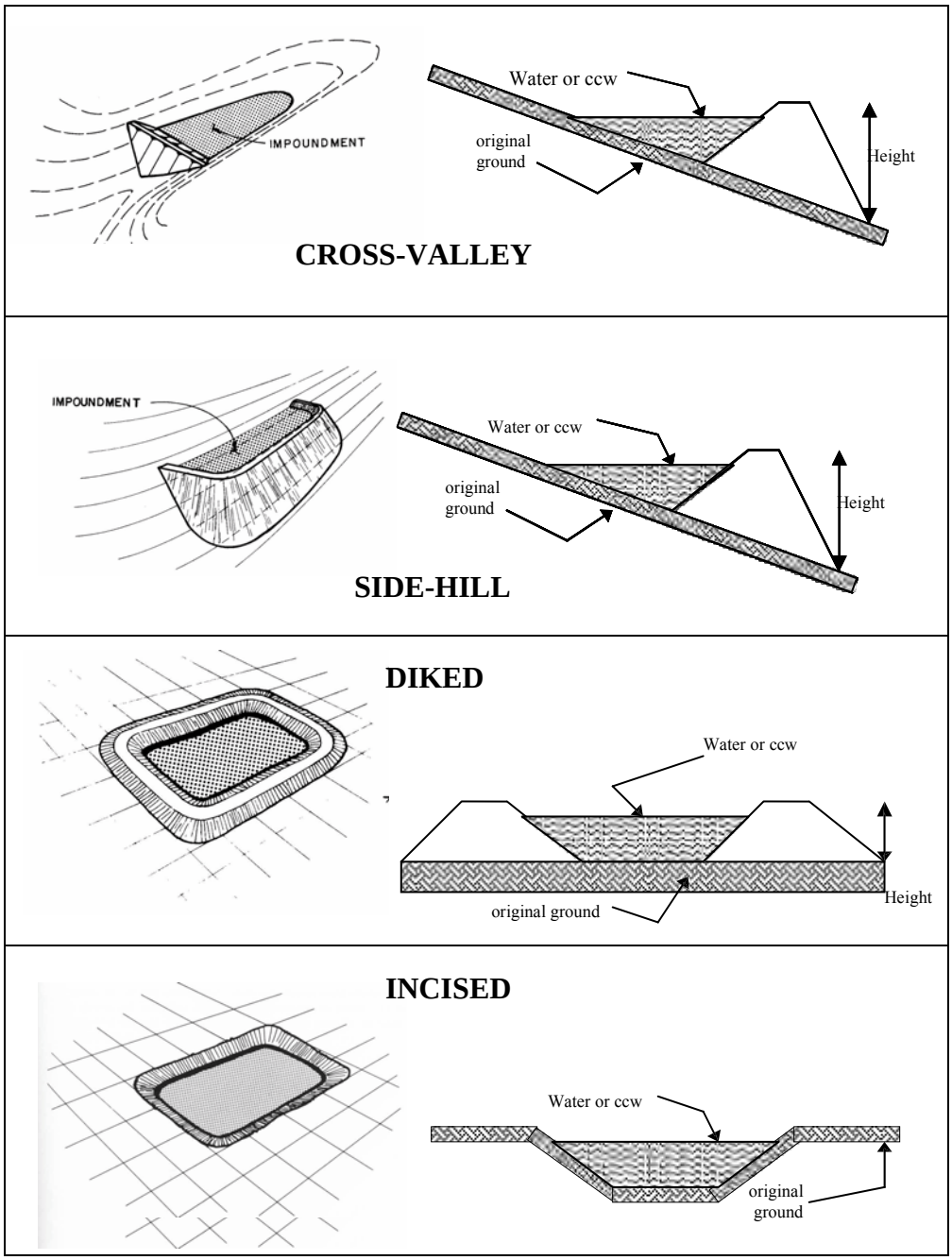

_____Cross-Valley
_____Side-Hill
_____Diked
_____Incised (form completion optional)
___X___Combination Incised/Diked

Embankment Height ____9_____feet Embankment Material unknown
Pool Area _____1.54___ acres Liner unknown
Current Freeboard unknown ____ feet Liner Permeability unknown

TYPE OF OUTLET (Mark all that apply)

_____**Open Channel Spillway**
__X__Trapezoidal**
_____Triangular
_____Rectangular
_____Irregular

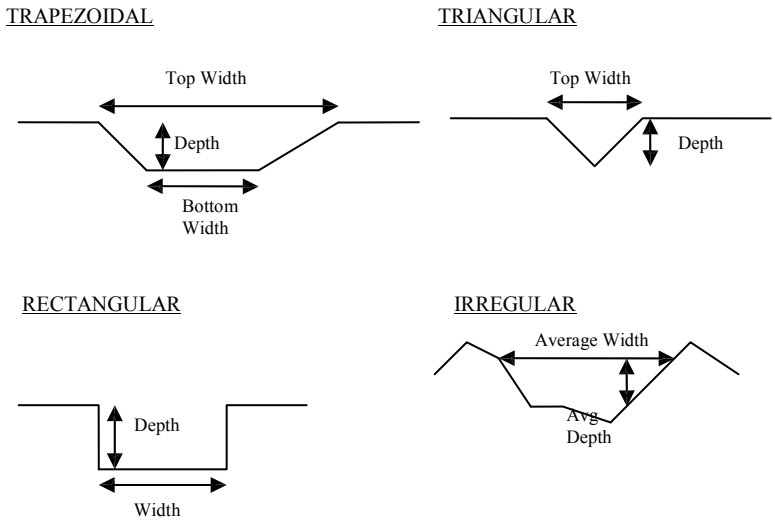

_unknown_depth
_unknown___bottom (or average) width
_unknown__top width

Note** Drawings not provided

_____**Outlet**

_____inside diameter

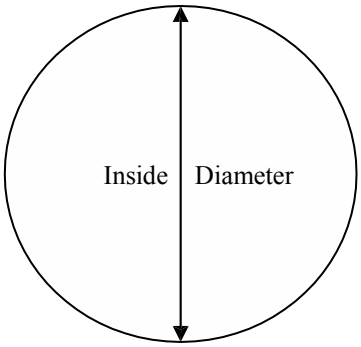

Material
_____corrugated metal
_____welded steel
_____concrete
_____plastic (hdpe, pvc, etc.)
_____other (specify) _____

_____

Is water flowing through the outlet? YES _____ NO _X_____

_____**No Outlet**

_____

_____**Other Type of Outlet** (specify) _____

The Impoundment was Designed By _Sargent & Lundy_____
_____

Has there ever been a failure at this site? YES _____NO ____X_____

If So When? _____

If So Please Describe : _____

Has there ever been significant seepages at this site? YES _____NO ___X___

If So When? _____

IF So Please Describe: _____

Has there ever been any measures undertaken to monitor/lower Phreatic water table levels based on past seepages or breaches at this site? YES _____NO __X____

If so, which method (e.g., piezometers, gw pumping,...)? _____

If so Please Describe : _____

Coal Combustion Dam Inspection Checklist Form

US Environmental Protection Agency

Site Name: Dolet Hills	Date: October 20, 2010
Unit Name: Surge Pond No. 1	Operator's Name: Cleco
Unit I.D.:	Hazard Potential Classification: High Significant **Low**
Inspector's Name: Don Dotson/AMEC and Mary Sawitzki/AMEC	

Check the appropriate box below. Provide comments when appropriate. If not applicable or not available, record "N/A". Any unusual conditions or construction practices that should be noted in the comments section. For large diked embankments, separate checklists may be used for different embankment areas. If separate forms are used, identify approximate area that the form applies to in comments.

	Yes	No		Yes	No
1. Frequency of Company's Dam Inspections?	See Note		18. Sloughing or bulging on slopes?		X
2. Pool elevation (operator records)?	See Note		19. Major erosion or slope deterioration?		X
3. Decant inlet elevation (operator records)?	See note		20. Decant Pipes: See Note		
4. Open channel spillway elevation (operator records)?	N/A		Is water entering inlet, but not exiting outlet?		
5. Lowest dam crest elevation (operator records)?	240.0 ft		Is water exiting outlet, but not entering inlet?		
6. If instrumentation is present, are readings recorded (operator records)?	X		Is water exiting outlet flowing clear?		
7. Is the embankment currently under construction?		X	21. Seepage (specify location, if seepage carries fines, and approximate seepage rate below):		
8. Foundation preparation (remove vegetation,stumps, topsoil in area where embankment fill will be placed)?	See	Note	From underdrain?		X
9. Trees growing on embankment? (If so, indicate largest diameter below)		X	At isolated points on embankment slopes?		X
10. Cracks or scarps on crest?		X	At natural hillside in the embankment area?		X
11. Is there significant settlement along the crest?		X	Over widespread areas?		X
12. Are decant trashracks clear and in place?	N/A		From downstream foundation area?		X
13. Depressions or sinkholes in tailings surface or whirlpool in the pool area?		X	"Boils" beneath stream or ponded water?		X
14. Clogged spillways, groin or diversion ditches?		X	Around the outside of the decant pipe?		X
15. Are spillway or ditch linings deteriorated?		X	22. Surface movements in valley bottom or on hillside?		X
16. Are outlets of decant or underdrains blocked?		X	23. Water against downstream toe?		X
17. Cracks or scarps on slopes?		X	24. Were Photos taken during the dam inspection?	X	

Major adverse changes in these items could cause instability and should be reported for further evaluation. Adverse conditions noted in these items should normally be described (extent, location, volume, etc.) in the space below and on the back of this sheet.

Inspection Issue #	Comments
1.	Daily log and six-month monitoring reports (including piezometer water surface elevations) by Cleco and annually by state of Louisiana.
2.	Max. water surface elev. 233.0 ft
3.	Decant is pumped
6.	Various monitoring wells and piezometers around site; read at least every six months according to personnel
8	Unknown
20.	Pump is used to decant, was not operating

U. S. Environmental Protection Agency

Coal Combustion Waste (CCW)
Impoundment Inspection

Impoundment NPDES Permit # LA0062600 AI No.: 585 INSPECTOR: Don Dotson/AMEC
Date October 20, 2010 Mary Sawitzki/AMEC

Impoundment Name: Surge Pond No. 1
Impoundment Company: Cleco Power LLC and AEP-SWEPCO
EPA Region 6
State Agency (Field Office) Address: Louisiana Department of Environmental Quality
Galvez Building 602 N. Fifth St.
Baton Rouge, LA 70802

Name of Impoundment Dolet Hills Surge Pond No. 1
(Report each impoundment on a separate form under the same Impoundment NPDES Permit number)

New X Update _____

	Yes	No
Is impoundment currently under construction?		X
Is water or ccw currently being pumped into the impoundment?		X*

*(flow not discharging from upstream auxiliary surge pond)

IMPOUNDMENT FUNCTION: Receives discharge from auxiliary surge pond

Nearest Downstream Town : Name Goss, LA
Distance from the impoundment approx. 2 miles
Impoundment
Location: Longitude -93 Degrees 34 Minutes 19.5 Seconds
Latitude 32 Degrees 1 Minutes 47.9 Seconds
State LA County DeSoto Parrish

Does a state agency regulate this impoundment? YES X NO _____

If So Which State Agency? Louisiana Department of Environmental Quality

HAZARD POTENTIAL (In the event the impoundment should fail, the following would occur):

_____**LESS THAN LOW HAZARD POTENTIAL:** Failure or misoperation of the dam results in no probable loss of human life or economic or environmental losses.

__X__**LOW HAZARD POTENTIAL:** Dams assigned the low hazard potential classification are those where failure or misoperation results in no probable loss of human life and low economic and/or environmental losses. Losses are principally limited to the owner's property.

_____**SIGNIFICANT HAZARD POTENTIAL:** Dams assigned the significant hazard potential classification are those dams where failure or misoperation results in no probable loss of human life but can cause economic loss, environmental damage, disruption of lifeline facilities, or can impact other concerns. Significant hazard potential classification dams are often located in predominantly rural or agricultural areas but could be located in areas with population and significant infrastructure.

_____**HIGH HAZARD POTENTIAL:** Dams assigned the high hazard potential classification are those where failure or misoperation will probably cause loss of human life.

DESCRIBE REASONING FOR HAZARD RATING CHOSEN:

Low economic/environmental impact, primarily to owner's property

CONFIGURATION:

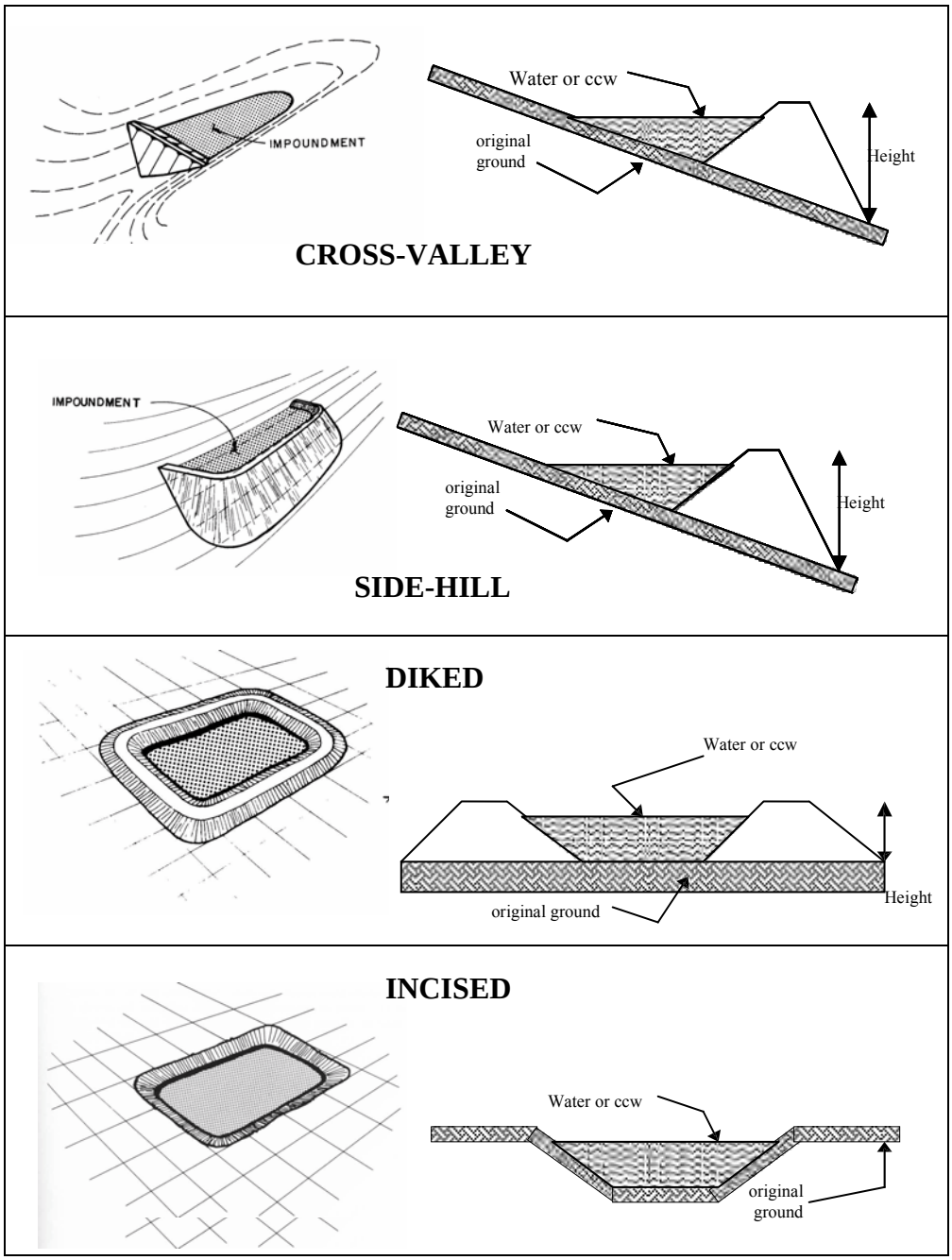

_____Cross-Valley
_____Side-Hill
_____Diked
_____Incised (form completion optional)
__X__Combination Incised/Diked

Embankment Height ___19_____feet Embankment Material unknown
Pool Area _____2.25___ acres Liner unknown
Current Freeboard __2 to 3_____ feet Liner Permeability unknown

TYPE OF OUTLET (Mark all that apply)

_____**Open Channel Spillway**
_____Trapezoidal
_____Triangular
_____Rectangular
_____Irregular

_____depth
_____bottom (or average) width
_____top width
_____

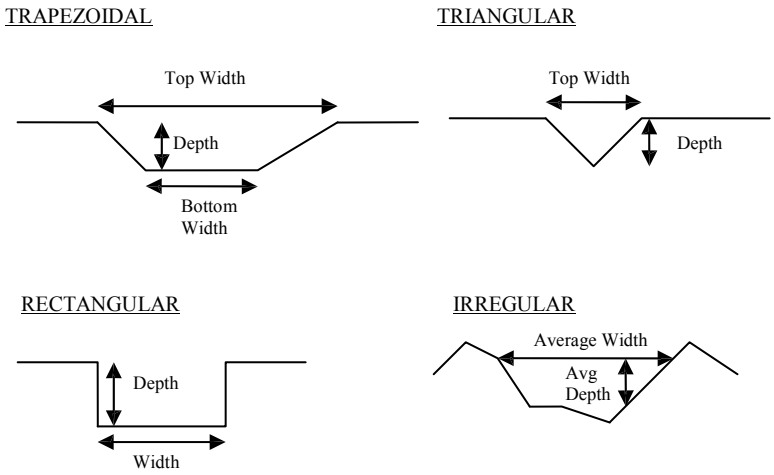

_____**Outlet**

_____inside diameter

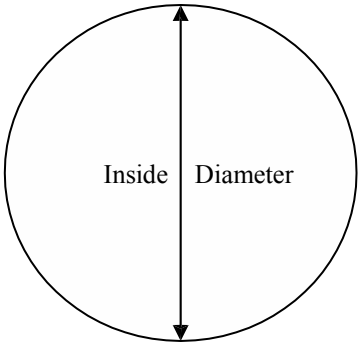

Material
_____corrugated metal
_____welded steel
_____concrete
_____plastic (hdpe, pvc, etc.)
_____other (specify) _____

_____
Is water flowing through the outlet? YES _____ NO __X____

_____**No Outlet**

_____

__X__**Other Type of Outlet** (specify) pump

The Impoundment was Designed By Sargent & Lundy

Has there ever been a failure at this site? YES _____NO ____X_____

If So When? _____

If So Please Describe : _____

Has there ever been significant seepages at this site? YES _____NO ___X___

If So When? _____

IF So Please Describe: _____

Has there ever been any measures undertaken to monitor/lower Phreatic water table levels based on past seepages or breaches at this site? YES _____NO __X____

If so, which method (e.g., piezometers, gw pumping,...)? _____

If so Please Describe : _____

Coal Combustion Dam Inspection Checklist Form

US Environmental Protection Agency

Site Name: Dolet Hills	Date: October 20, 2010
Unit Name: Surge Pond No. 2	Operator's Name: Cleco
Unit I.D.:	Hazard Potential Classification: High Significant **Low**
Inspector's Name: Don Dotson/AMEC and Mary Sawitzki/AMEC	

Check the appropriate box below. Provide comments when appropriate. If not applicable or not available, record "N/A". Any unusual conditions or construction practices that should be noted in the comments section. For large diked embankments, separate checklists may be used for different embankment areas. If separate forms are used, identify approximate area that the form applies to in comments.

	Yes	No		Yes	No
1. Frequency of Company's Dam Inspections?	See Note		18. Sloughing or bulging on slopes?		X
2. Pool elevation (operator records)?	not provided		19. Major erosion or slope deterioration?		X
3. Decant inlet elevation (operator records)?	N/A		20. Decant Pipes: N/A See note		
4. Open channel spillway elevation (operator records)?	N/A		Is water entering inlet, but not exiting outlet?		
5. Lowest dam crest elevation (operator records)?	not provided		Is water exiting outlet, but not entering inlet?		
6. If instrumentation is present, are readings recorded (operator records)? SEE NOTE	X		Is water exiting outlet flowing clear?		
7. Is the embankment currently under construction?		X	21. Seepage (specify location, if seepage carries fines, and approximate seepage rate below):		
8. Foundation preparation (remove vegetation,stumps, topsoil in area where embankment fill will be placed)?	See	Note	From underdrain?		X
9. Trees growing on embankment? (If so, indicate largest diameter below)		X	At isolated points on embankment slopes?		X
10. Cracks or scarps on crest?		X	At natural hillside in the embankment area?		X
11. Is there significant settlement along the crest?		X	Over widespread areas?		X
12. Are decant trashracks clear and in place?	N/A		From downstream foundation area?		X
13. Depressions or sinkholes in tailings surface or whirlpool in the pool area?		X	"Boils" beneath stream or ponded water?		X
14. Clogged spillways, groin or diversion ditches?		X	Around the outside of the decant pipe?		X
15. Are spillway or ditch linings deteriorated?		X	22. Surface movements in valley bottom or on hillside?		X
16. Are outlets of decant or underdrains blocked?		X	23. Water against downstream toe?		X
17. Cracks or scarps on slopes?		X	24. Were Photos taken during the dam inspection?	X	

Major adverse changes in these items could cause instability and should be reported for further evaluation. Adverse conditions noted in these items should normally be described (extent, location, volume, etc.) in the space below and on the back of this sheet.

Inspection Issue #	Comments
1.	Daily log and six-month monitoring reports (including piezometer water surface elevations) by Cleco and annually by state of Louisiana.
6.	Various monitoring wells and piezometers around site; read at least every six months according to personnel
8.	Unknown
20.	No decant piping or spillway other than crest, pond not in use during site visit, contained only small volume of discharge

U. S. Environmental Protection Agency

Coal Combustion Waste (CCW)
Impoundment Inspection

Impoundment NPDES Permit # LA0062600 AI No.: 585 INSPECTOR: Don Dotson/AMEC
Date October 20, 2010 Mary Sawitzki/AMEC

Impoundment Name: Surge Pond No. 2
Impoundment Company: Cleco Power LLC and AEP-SWEPCO
EPA Region 6
State Agency (Field Office) Address: Louisiana Department of Environmental Quality
Galvez Building 602 N. Fifth St.
Baton Rouge, LA 70802

Name of Impoundment Dolet Hills Surge Pond No. 2
(Report each impoundment on a separate form under the same Impoundment NPDES Permit number)

New X Update _____

	Yes	No
Is impoundment currently under construction?		X
Is water or ccw currently being pumped into the impoundment? (currently out of service due to extremely dry summer/fall)		X

IMPOUNDMENT FUNCTION: Receives excess volume (via pump) from Surge Pond No. 1

Nearest Downstream Town : Name Goss, LA
Distance from the impoundment approx. 2 miles
Impoundment
Location: Longitude -93 Degrees 34 Minutes 3.8 Seconds
Latitude 32 Degrees 1 Minutes 43.5 Seconds
State LA County DeSoto Parrish

Does a state agency regulate this impoundment? YES X NO _____

If So Which State Agency? Louisiana Department of Environmental Quality

HAZARD POTENTIAL (In the event the impoundment should fail, the following would occur):

_____**LESS THAN LOW HAZARD POTENTIAL:** Failure or misoperation of the dam results in no probable loss of human life or economic or environmental losses.

__X__**LOW HAZARD POTENTIAL:** Dams assigned the low hazard potential classification are those where failure or misoperation results in no probable loss of human life and low economic and/or environmental losses. Losses are principally limited to the owner's property.

_____**SIGNIFICANT HAZARD POTENTIAL:** Dams assigned the significant hazard potential classification are those dams where failure or misoperation results in no probable loss of human life but can cause economic loss, environmental damage, disruption of lifeline facilities, or can impact other concerns. Significant hazard potential classification dams are often located in predominantly rural or agricultural areas but could be located in areas with population and significant infrastructure.

_____**HIGH HAZARD POTENTIAL:** Dams assigned the high hazard potential classification are those where failure or misoperation will probably cause loss of human life.

DESCRIBE REASONING FOR HAZARD RATING CHOSEN:

Low economic/environmental impact, primarily to owner's property

CONFIGURATION:

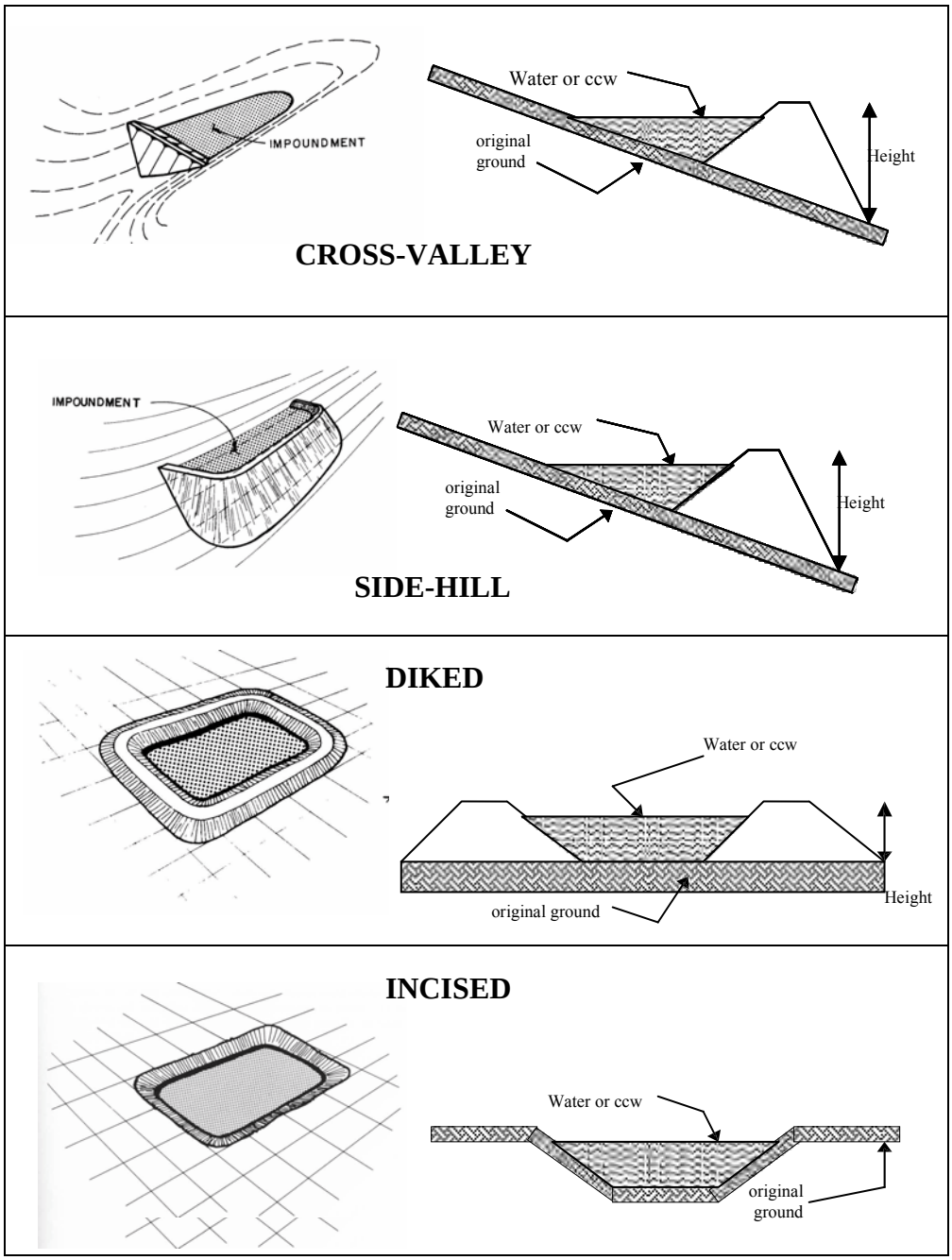

_____Cross-Valley
_____Side-Hill
__X__Diked
_____Incised (form completion optional)
_____Combination Incised/Diked

Embankment Height ___20.9___ feet Embankment Material unknown
Pool Area _____4.8___ acres Liner unknown
Current Freeboard ___~ 16___ feet Liner Permeability unknown

TYPE OF OUTLET (Mark all that apply)

_____**Open Channel Spillway**
_____Trapezoidal
_____Triangular
_____Rectangular
_____Irregular

_____depth
_____bottom (or average) width
_____top width
_____

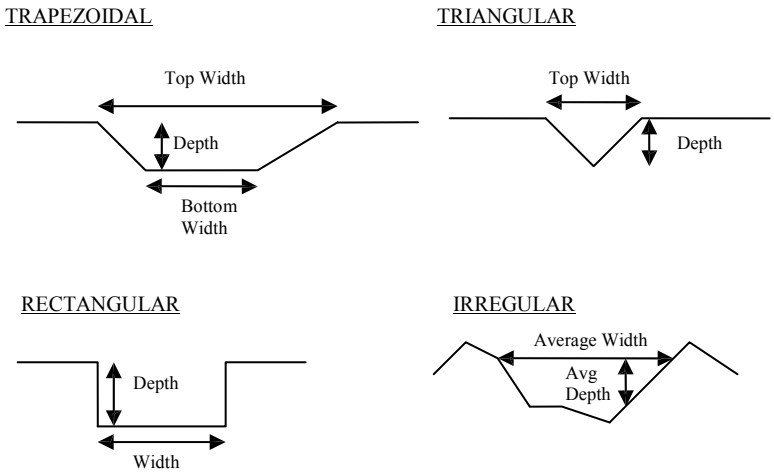

_____**Outlet**

_____inside diameter

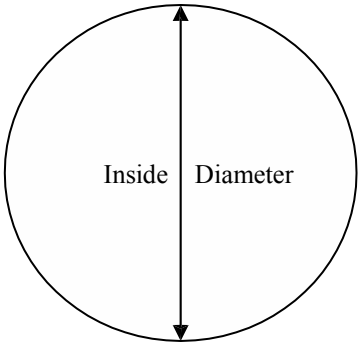

Material
_____corrugated metal
_____welded steel
_____concrete
_____plastic (hdpe, pvc, etc.)
_____other (specify) _____

_____
Is water flowing through the outlet? YES _____ NO _____

__X__**No Outlet**

_____

_____**Other Type of Outlet** (specify) _____

The Impoundment was Designed By Unknown
_____

Has there ever been a failure at this site? YES _____NO _____X_____

If So When? _____

If So Please Describe : _____

Has there ever been significant seepages at this site? YES _____NO ___X___

If So When? _____

IF So Please Describe: _____

Has there ever been any measures undertaken to monitor/lower Phreatic water table levels based on past seepages or breaches at this site? YES _____NO __X____

If so, which method (e.g., piezometers, gw pumping,...)? _____

If so Please Describe : _____

Coal Combustion Dam Inspection Checklist Form

US Environmental Protection Agency

Site Name: Dolet Hills	Date: October 20, 2010
Unit Name: Landfill Storm Water/Leachate	Operator's Name: Cleco
Unit I.D.: Runoff Pond	Hazard Potential Classification: High Significant **Low**
Inspector's Name: Don Dotson/AMEC and Mary Sawitzki/AMEC	

Check the appropriate box below. Provide comments when appropriate. If not applicable or not available, record "N/A". Any unusual conditions or construction practices that should be noted in the comments section. For large diked embankments, separate checklists may be used for different embankment areas. If separate forms are used, identify approximate area that the form applies to in comments.

	Yes	No		Yes	No
1. Frequency of Company's Dam Inspections?	See Note		18. Sloughing or bulging on slopes? SEE NOTE	X	
2. Pool elevation (operator records)?	not provided		19. Major erosion or slope deterioration?		X
3. Decant inlet elevation (operator records)?	not provided		20. Decant Pipes: SEE NOTE		
4. Open channel spillway elevation (operator records)?	not provided		Is water entering inlet, but not exiting outlet?		
5. Lowest dam crest elevation (operator records)?	not provided		Is water exiting outlet, but not entering inlet?		
6. If instrumentation is present, are readings recorded (operator records)?	See	Note	Is water exiting outlet flowing clear?		
7. Is the embankment currently under construction?		X	21. Seepage (specify location, if seepage carries fines, and approximate seepage rate below):		
8. Foundation preparation (remove vegetation, stumps, topsoil in area where embankment fill will be placed)?	See	Note	From underdrain?		X
9. Trees growing on embankment? (If so, indicate largest diameter below)	X		At isolated points on embankment slopes?		X
10. Cracks or scarps on crest?		X	At natural hillside in the embankment area?		X
11. Is there significant settlement along the crest?		X	Over widespread areas?		X
12. Are decant trashracks clear and in place?	N/A		From downstream foundation area?		X
13. Depressions or sinkholes in tailings surface or whirlpool in the pool area?		X	"Boils" beneath stream or ponded water?		X
14. Clogged spillways, groin or diversion ditches?		X	Around the outside of the decant pipe?		X
15. Are spillway or ditch linings deteriorated?		X	22. Surface movements in valley bottom or on hillside?		X
16. Are outlets of decant or underdrains blocked?		X	23. Water against downstream toe?		X
17. Cracks or scarps on slopes?		X	24. Were Photos taken during the dam inspection?	X	

Major adverse changes in these items could cause instability and should be reported for further evaluation. Adverse conditions noted in these items should normally be described (extent, location, volume, etc.) in the space below and on the back of this sheet.

Inspection Issue #	Comments
1.	Daily log and six-month monitoring reports (including piezometer water surface elevations) by Cleco and annually by state of Louisiana.
6.	Various monitoring wells and piezometers around site; read (recorded?) at least every six months according to personnel
8.	Unknown
9.	Diameters between 6” to 8”
18.	Small slump area adjacent to control valve on downstream section of pond discharge culvert (discharge pipe valved upstream and downstream)
20.	Decant pipe buried, valve operated, downstream valve was closed, no flow

U. S. Environmental Protection Agency

Coal Combustion Waste (CCW)
Impoundment Inspection

Impoundment NPDES Permit # LA0062600 AI No.: 585 INSPECTOR: Don Dotson/AMEC
Date October 20, 2010 Mary Sawitzki/AMEC

Impoundment Name: Landfill Storm Water/Leachate Runoff Pond
Impoundment Company: Cleco Power LLC and AEP-SWEPCO
EPA Region 6
State Agency (Field Office) Address: Louisiana Department of Environmental Quality
Galvez Building 602 N. Fifth St.
Baton Rouge, LA 70802

Name of Impoundment Dolet Hills Landfill Storm Water/Leachate Runoff Pond
(Report each impoundment on a separate form under the same Impoundment NPDES Permit number)

New X Update _____

	Yes	No
Is impoundment currently under construction?		X
Is water or ccw currently being pumped into the impoundment? (no flow during site visit)		X

IMPOUNDMENT FUNCTION: Receives primarily stormwater runoff from landfill (contains CCW)

Nearest Downstream Town : Name Goss, LA
Distance from the impoundment approx. 2 miles
Impoundment Location:
Longitude -93 Degrees 33 Minutes 59.8 Seconds
Latitude 32 Degrees 1 Minutes 13.5 Seconds
State LA County DeSoto Parrish

Does a state agency regulate this impoundment? YES X NO _____

If So Which State Agency? Louisiana Department of Environmental Quality

HAZARD POTENTIAL (In the event the impoundment should fail, the following would occur):

_____**LESS THAN LOW HAZARD POTENTIAL:** Failure or misoperation of the dam results in no probable loss of human life or economic or environmental losses.

__X__**LOW HAZARD POTENTIAL:** Dams assigned the low hazard potential classification are those where failure or misoperation results in no probable loss of human life and low economic and/or environmental losses. Losses are principally limited to the owner's property.

_____**SIGNIFICANT HAZARD POTENTIAL:** Dams assigned the significant hazard potential classification are those dams where failure or misoperation results in no probable loss of human life but can cause economic loss, environmental damage, disruption of lifeline facilities, or can impact other concerns. Significant hazard potential classification dams are often located in predominantly rural or agricultural areas but could be located in areas with population and significant infrastructure.

_____**HIGH HAZARD POTENTIAL:** Dams assigned the high hazard potential classification are those where failure or misoperation will probably cause loss of human life.

DESCRIBE REASONING FOR HAZARD RATING CHOSEN:

Low economic/environmental impact, primarily to owner's property

CONFIGURATION:

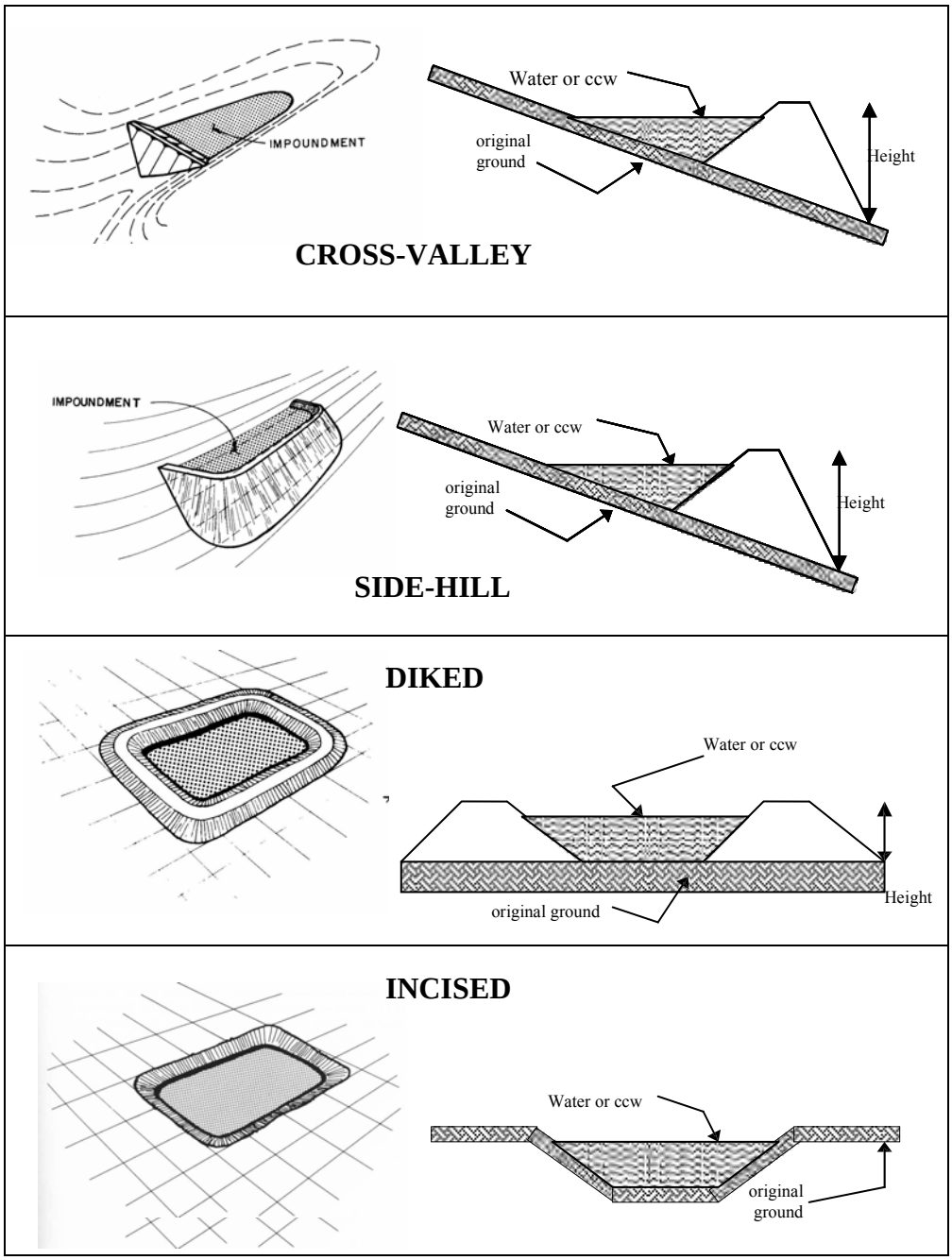

__X__Cross-Valley
_____Side-Hill
_____Diked
_____Incised (form completion optional)
_____Combination Incised/Diked

Embankment Height not provided feet Embankment Material not provided
Pool Area not provided acres Liner Clay
Current Freeboard not provided feet Liner Permeability not provided

TYPE OF OUTLET (Mark all that apply)

_____**Open Channel Spillway**
__X__Trapezoidal
_____Triangular
_____Rectangular
_____Irregular

_____Depth**
_____bottom (or average) width**
_____top width**

**Dimensions not provided

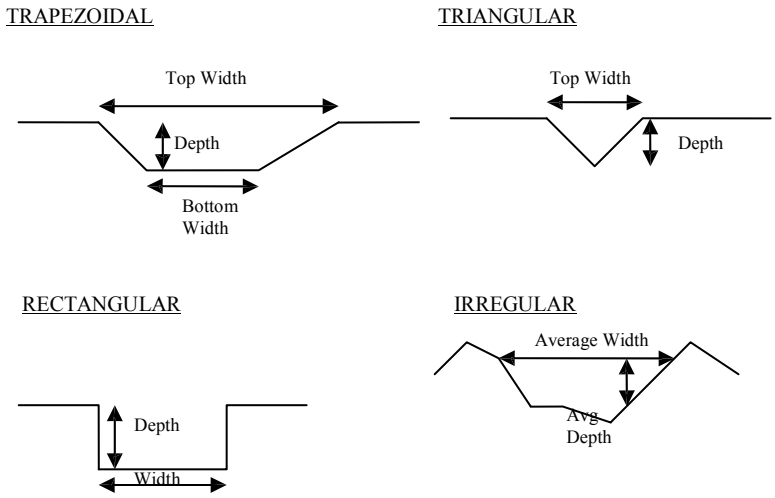

_____**Outlet**

_____inside diameter
(upstream and downstream valved culvert pipe)

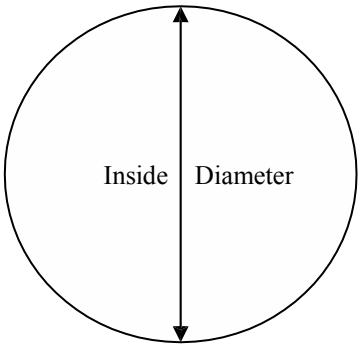

Material (unknown)
_____corrugated metal
_____welded steel
_____concrete
_____plastic (hdpe, pvc, etc.)
_____other (specify) _____

Is water flowing through the outlet? YES _____ NO __X__

_____**No Outlet**

_____**Other Type of Outlet** (specify) _____

The Impoundment was Designed By unknown

Has there ever been a failure at this site? YES _____NO _____X_____

If So When? _____

If So Please Describe : _____

Has there ever been significant seepages at this site? YES _____NO ___X___

If So When? _____

IF So Please Describe: _____

Has there ever been any measures undertaken to monitor/lower Phreatic water table levels based on past seepages or breaches at this site? YES _____NO ___X____

If so, which method (e.g., piezometers, gw pumping,...)? _____

If so Please Describe : _____

APPENDIX B
Site Photo Log Map and Site Photos

	UNITED STATES ENVIRONMENTAL PROTECTION AGENCY	DWN BY: DJC CKD BY: MS	ASSESSMENT OF DAM SAFETY OF COAL COMBUSTION SURFACE IMPOUNDMENTS	REV. No.: A Date: 11-9-10
AMEC Earth & Environmental 690 Commonwealth Business Center 11003 Bluegrass Parkway Louisville, KY 40299	amec	Datum: NAD 83 Projection: UTM 15 Scale: As Shown	AEP-SWEPCO/CLECO DOLET HILLS POWER STATION, MANSFIELD, LA PHOTO LOCATION MAP	Project No: 3-2106-0183-0004 Figure No: B-1

1

SECONDARY ASH POND-INFLUENT STRUCTURE

2

SECONDARY ASH POND-LOOKING SOUTHEAST FROM CREST

AMEC Earth & Environmental
690 Commonwealth Center
11003 Bluegrass Parkway
Louisville, Ky 40299
(502) 267-0700

PROJECT: ASSESSMENT OF DAM SAFETY OF COAL COMBUSTION SURFACE IMPOUNDMENTS	DWN BY: CAE	DATUM:	DATE: 11/4/10
TITLE: AEP-SWEPCO/CLECO DOLET HILLS POWER STATION, MANSFIELD, LA OUTFALL 0002 SITE PHOTOS	CHK'D BY: MOS	REV. NO.:	PROJECT NO: 3-2106-0183.0004
	PROJECTION:	SCALE: AS SHOWN	APPENDIX: B-2

CLIENT LOGO

CLIENT: UNITED STATES ENVIRONMENTAL PROTECTION AGENCY

3

SECONDARY ASH POND-LOOKING SOUTH FROM CREST

4

SECONDARY ASH POND-LOOKING SOUTHWEST FROM CREST

AMEC Earth & Environmental
690 Commonwealth Center
11003 Bluegrass Parkway
Louisville, Ky 40299
(502) 267-0700

CLIENT LOGO

CLIENT: UNITED STATES ENVIRONMENTAL PROTECTION AGENCY

PROJECT: ASSESSMENT OF DAM SAFETY OF COAL COMBUSTION SURFACE IMPOUNDMENTS	DWN BY: CAE	DATUM:	DATE: 11/4/10
TITLE: AEP-SWEPCO/CLECO DOLET HILLS POWER STATION, MANSFIELD, LA OUTFALL 0002 SITE PHOTOS	CHK'D BY: MOS	REV. NO.:	PROJECT NO: 3-2106-0183.0004
	PROJECTION:	SCALE: AS SHOWN	APPENDIX: B-3

5

SECONDARY ASH POND-LOOKING WEST FROM CREST

6

SECONDARY ASH POND-LOOKING NORTHWEST FROM CREST

AMEC Earth & Environmental
690 Commonwealth Center
11003 Bluegrass Parkway
Louisville, Ky 40299
(502) 267-0700

CLIENT LOGO

CLIENT: UNITED STATES ENVIRONMENTAL PROTECTION AGENCY

PROJECT: ASSESSMENT OF DAM SAFETY OF COAL COMBUSTION SURFACE IMPOUNDMENTS	DWN BY: CAE	DATUM:	DATE: 11/4/10
TITLE: AEP-SWEPCO/CLECO DOLET HILLS POWER STATION, MANSFIELD, LA OUTFALL 0002 SITE PHOTOS	CHK'D BY: MOS	REV. NO.:	PROJECT NO: 3-2106-0183.0004
	PROJECTION:	SCALE: AS SHOWN	APPENDIX: B-4

7

SECONDARY ASH POND-LOOKING NORTH ALONG ROADWAY WEST OF ASH POND EMBANKMENTS

8

SECONDARY ASH POND-LOOKING SOUTH ALONG ROADWAY WEST OF ASH POND EMBANKMENTS

AMEC Earth & Environmental
690 Commonwealth Center
11003 Bluegrass Parkway
Louisville, Ky 40299
(502) 267-0700

CLIENT LOGO	CLIENT	UNITED STATES ENVIRONMENTAL PROTECTION AGENCY	
PROJECT: ASSESSMENT OF DAM SAFETY OF COAL COMBUSTION SURFACE IMPOUNDMENTS	DWN BY: CAE	DATUM:	DATE: 11/4/10
TITLE: AEP-SWEPCO/CLECO DOLET HILLS POWER STATION, MANSFIELD, LA OUTFALL 0002 SITE PHOTOS	CHK'D BY: MOS	REV. NO.:	PROJECT NO: 3-2106-0183.0004
	PROJECTION:	SCALE: AS SHOWN	APPENDIX: B-5

9

SECONDARY ASH POND-LOOKING EAST AT SECONDARY ASH POND DISCHARGE PIPE AND VALVE OPERATOR (LPDES OUTFALL 002)

10

SECONDARY ASH POND-LOOKING SOUTH AT LPDES OUTFALL 002 DOWNSTREAM PIPE DISCHARGE AND CHANNEL ENTRANCE

AMEC Earth & Environmental
690 Commonwealth Center
11003 Bluegrass Parkway
Louisville, Ky 40299
(502) 267-0700

CLIENT LOGO	CLIENT	UNITED STATES ENVIRONMENTAL PROTECTION AGENCY	
PROJECT: ASSESSMENT OF DAM SAFETY OF COAL COMBUSTION SURFACE IMPOUNDMENTS	DWN BY: CAE	DATUM:	DATE: 11/4/10
TITLE: AEP-SWEPCO/CLECO DOLET HILLS POWER STATION, MANSFIELD, LA OUTFALL 0002 SITE PHOTOS	CHK'D BY: MOS	REV. NO.:	PROJECT NO: 3-2106-0183.0004
	PROJECTION:	SCALE: AS SHOWN	APPENDIX: B-6

11

SECONDARY ASH POND-LOOKING SOUTHWEST AT LPDES OUTFALL 002 CHANNEL

12

SECONDARY ASH POND-LOOKING WEST AT LPDES OUTFALL 002 CHANNEL AND PIPE CULVERT UNDER ROADWAY

AMEC Earth & Environmental 690 Commonwealth Center 11003 Bluegrass Parkway Louisville, Ky 40299 (502) 267-0700	amec	CLIENT LOGO	CLIENT UNITED STATES ENVIRONMENTAL PROTECTION AGENCY	
PROJECT ASSESSMENT OF DAM SAFETY OF COAL COMBUSTION SURFACE IMPOUNDMENTS		DWN BY: CAE	DATUM:	DATE: 11/4/10
TITLE AEP-SWEPCO/CLECO DOLET HILLS POWER STATION, MANSFIELD, LA OUTFALL 0002 SITE PHOTOS		CHK'D BY: MOS	REV. NO.:	PROJECT NO: 3-2106-0183.0004
		PROJECTION:	SCALE: AS SHOWN	APPENDIX: B-7

13

SECONDARY ASH POND-LOOKING SOUTH AT DRAINAGE SWALE ALONG ROAD BELOW POND EMBANKMENT

14

SECONDARY ASH POND-LOOKING NORTH AT DRAINAGE SWALE ALONG ROAD BELOW POND EMBANKMENT

AMEC Earth & Environmental 690 Commonwealth Center 11003 Bluegrass Parkway Louisville, Ky 40299 (502) 267-0700	amec	CLIENT LOGO	CLIENT UNITED STATES ENVIRONMENTAL PROTECTION AGENCY	
PROJECT ASSESSMENT OF DAM SAFETY OF COAL COMBUSTION SURFACE IMPOUNDMENTS		DWN BY: CAE	DATUM:	DATE: 11/4/10
TITLE AEP-SWEPCO/CLECO DOLET HILLS POWER STATION, MANSFIELD, LA OUTFALL 0002 SITE PHOTOS		CHK'D BY: MOS	REV. NO.:	PROJECT NO: 3-2106-0183.0004
		PROJECTION:	SCALE: AS SHOWN	APPENDIX: B-8

15
ASH POND 1-LOOKING NORTH FROM CREST

16
ASH POND 1-LOOKING NORTHEAST
AT DISCHARGE STRUCTURE

AMEC Earth & Environmental
690 Commonwealth Center
11003 Bluegrass Parkway
Louisville, Ky 40299
(502) 267-0700

CLIENT LOGO

CLIENT: UNITED STATES ENVIRONMENTAL PROTECTION AGENCY

PROJECT: ASSESSMENT OF DAM SAFETY OF COAL COMBUSTION SURFACE IMPOUNDMENTS	DWN BY: CAE	DATUM:	DATE: 11/4/10
TITLE: AEP-SWEPCO/CLECO DOLET HILLS POWER STATION, MANSFIELD, LA OUTFALL 0002 SITE PHOTOS	CHK'D BY: MOS	REV. NO.:	PROJECT NO: 3-2106-0183.0004
	PROJECTION:	SCALE: AS SHOWN	APPENDIX: B-9

17
ASH POND 1-LOOKING SOUTHEAST ACROSS POND

18
ASH POND 1-LOOKING SOUTH ALONG CREST

AMEC Earth & Environmental
690 Commonwealth Center
11003 Bluegrass Parkway
Louisville, Ky 40299
(502) 267-0700

CLIENT LOGO	CLIENT	UNITED STATES ENVIRONMENTAL PROTECTION AGENCY	
PROJECT: ASSESSMENT OF DAM SAFETY OF COAL COMBUSTION SURFACE IMPOUNDMENTS	DWN BY: CAE	DATUM:	DATE: 11/4/10
TITLE: AEP-SWEPCO/CLECO DOLET HILLS POWER STATION, MANSFIELD, LA OUTFALL 0002 SITE PHOTOS	CHK'D BY: MOS	REV. NO.:	PROJECT NO: 3-2106-0183.0004
	PROJECTION:	SCALE: AS SHOWN	APPENDIX: B-10

19

ASH POND 1-LOOKING SOUTHEAST AT EROSION ON SIDE OF ROADWAY LEADING TO ASH POND 1 EMBANKMENT CREST

20

ASH POND 1-LOOKING SOUTH AT EROSION ON SIDE OF ROADWAY LEADING TO ASH POND 1 EMBANKMENT CREST

AMEC Earth & Environmental 690 Commonwealth Center 11003 Bluegrass Parkway Louisville, Ky 40299 (502) 267-0700	amec	CLIENT LOGO	CLIENT UNITED STATES ENVIRONMENTAL PROTECTION AGENCY	
PROJECT ASSESSMENT OF DAM SAFETY OF COAL COMBUSTION SURFACE IMPOUNDMENTS		DWN BY: CAE	DATUM:	DATE: 11/4/10
TITLE AEP-SWEPCO/CLECO DOLET HILLS POWER STATION, MANSFIELD, LA OUTFALL 0002 SITE PHOTOS		CHK'D BY: MOS	REV. NO.:	PROJECT NO: 3-2106-0183.0004
		PROJECTION:	SCALE: AS SHOWN	APPENDIX: B-11

21

ASH POND 1-LOOKING SOUTHWEST AT EROSION ON SIDE OF ROADWAY LEADING TO ASH POND 1 EMBANKMENT CREST

22

ASH POND 1-MONITORING WELL 16 LOCATED ADJACENT TO ASH POND 1

AMEC Earth & Environmental 690 Commonwealth Center 11003 Bluegrass Parkway Louisville, Ky 40299 (502) 267-0700	amec	CLIENT LOGO	CLIENT UNITED STATES ENVIRONMENTAL PROTECTION AGENCY	
PROJECT ASSESSMENT OF DAM SAFETY OF COAL COMBUSTION SURFACE IMPOUNDMENTS		DWN BY: CAE	DATUM:	DATE: 11/4/10
TITLE AEP-SWEPCO/CLECO DOLET HILLS POWER STATION, MANSFIELD, LA OUTFALL 0002 SITE PHOTOS		CHK'D BY: MOS	REV. NO.:	PROJECT NO: 3-2106-0183.0004
		PROJECTION:	SCALE: AS SHOWN	APPENDIX: B-12

23

ASH POND 1-VIEW FROM SOUTH END OF EMBANKMENT LOOKING EAST

24

ASH POND 2-LOOKING NORTHEAST FROM CREST

AMEC Earth & Environmental 690 Commonwealth Center 11003 Bluegrass Parkway Louisville, Ky 40299 (502) 267-0700	amec	CLIENT LOGO	CLIENT UNITED STATES ENVIRONMENTAL PROTECTION AGENCY	
PROJECT ASSESSMENT OF DAM SAFETY OF COAL COMBUSTION SURFACE IMPOUNDMENTS		DWN BY: CAE	DATUM:	DATE: 11/4/10
TITLE AEP-SWEPCO/CLECO DOLET HILLS POWER STATION, MANSFIELD, LA OUTFALL 0002 SITE PHOTOS		CHK'D BY: MOS	REV. NO.:	PROJECT NO: 3-2106-0183.0004
		PROJECTION:	SCALE: AS SHOWN	APPENDIX: B-13

25
ASH POND 2-LOOKING EAST AT STACKED ASH

26
ASH POND 2-LOOKING SOUTH AT STACKED ASH

AMEC Earth & Environmental
690 Commonwealth Center
11003 Bluegrass Parkway
Louisville, Ky 40299
(502) 267-0700

CLIENT LOGO	CLIENT	UNITED STATES ENVIRONMENTAL PROTECTION AGENCY	
PROJECT: ASSESSMENT OF DAM SAFETY OF COAL COMBUSTION SURFACE IMPOUNDMENTS	DWN BY: CAE	DATUM:	DATE: 11/4/10
TITLE: AEP-SWEPCO/CLECO DOLET HILLS POWER STATION, MANSFIELD, LA OUTFALL 0002 SITE PHOTOS	CHK'D BY: MOS	REV. NO.:	PROJECT NO: 3-2106-0183.0004
	PROJECTION:	SCALE: AS SHOWN	APPENDIX: B-14

27

ASH POND 2-LOOKING SOUTHWEST TOWARD PLANT FROM EMBANKMENT

28

ASH POND 2-LOOKING NORTHEAST ALONG DOWNSTREAM EMBANKMENT FACE

AMEC Earth & Environmental
690 Commonwealth Center
11003 Bluegrass Parkway
Louisville, Ky 40299
(502) 267-0700

CLIENT LOGO	CLIENT	UNITED STATES ENVIRONMENTAL PROTECTION AGENCY	
PROJECT: ASSESSMENT OF DAM SAFETY OF COAL COMBUSTION SURFACE IMPOUNDMENTS	DWN BY: CAE	DATUM:	DATE: 11/4/10
TITLE: AEP-SWEPCO/CLECO DOLET HILLS POWER STATION, MANSFIELD, LA OUTFALL 0002 SITE PHOTOS	CHK'D BY: MOS	REV. NO.:	PROJECT NO: 3-2106-0183.0004
	PROJECTION:	SCALE: AS SHOWN	APPENDIX: B-15

29

ASH POND 2-LOOKING SOUTHWEST AT RESEEDING ALONG DOWNSTREAM EMBANKMENT FACE

30

ASH POND 2-OBSERVATION WELL NO. 18

AMEC Earth & Environmental 690 Commonwealth Center 11003 Bluegrass Parkway Louisville, Ky 40299 (502) 267-0700	amec	CLIENT LOGO	CLIENT UNITED STATES ENVIRONMENTAL PROTECTION AGENCY	
PROJECT ASSESSMENT OF DAM SAFETY OF COAL COMBUSTION SURFACE IMPOUNDMENTS		DWN BY: CAE	DATUM:	DATE: 11/4/10
TITLE AEP-SWEPCO/CLECO DOLET HILLS POWER STATION, MANSFIELD, LA OUTFALL 0002 SITE PHOTOS		CHK'D BY: MOS	REV. NO.:	PROJECT NO: 3-2106-0183.0004
		PROJECTION:	SCALE: AS SHOWN	APPENDIX: B-16

31

ASH POND 2-EXAMPLE OF OBSERVATION WELL IDENTIFICATION PLATE

32

ASH POND 2-LOOKING SOUTH ALONG RESEEDED EMBANKMENT FACE

AMEC Earth & Environmental 690 Commonwealth Center 11003 Bluegrass Parkway Louisville, Ky 40299 (502) 267-0700	amec	CLIENT LOGO	CLIENT UNITED STATES ENVIRONMENTAL PROTECTION AGENCY	
PROJECT ASSESSMENT OF DAM SAFETY OF COAL COMBUSTION SURFACE IMPOUNDMENTS		DWN BY: CAE	DATUM:	DATE: 11/4/10
TITLE AEP-SWEPCO/CLECO DOLET HILLS POWER STATION, MANSFIELD, LA OUTFALL 0002 SITE PHOTOS		CHK'D BY: MOS	REV. NO.:	PROJECT NO: 3-2106-0183.0004
		PROJECTION:	SCALE: AS SHOWN	APPENDIX: B-17

33

ASH POND 2-LOOKING WEST AT DUAL STORMWATER CULVERTS

34

ASH POND 2-APPARENT SEEPAGE UPSTREAM OF STORMWATER CULVERTS, RIGHT (NORTH) CULVERT HALF FILLED WITH SEDIMENT

CE

AMEC Earth & Environmental 690 Commonwealth Center 11003 Bluegrass Parkway Louisville, Ky 40299 (502) 267-0700	amec	CLIENT LOGO	CLIENT UNITED STATES ENVIRONMENTAL PROTECTION AGENCY	
PROJECT ASSESSMENT OF DAM SAFETY OF COAL COMBUSTION SURFACE IMPOUNDMENTS		DWN BY: CAE	DATUM:	DATE: 11/4/10
TITLE AEP-SWEPCO/CLECO DOLET HILLS POWER STATION, MANSFIELD, LA OUTFALL 0002 SITE PHOTOS		CHK'D BY: MOS	REV. NO.:	PROJECT NO: 3-2106-0183.0004
		PROJECTION:	SCALE: AS SHOWN	APPENDIX: B-18

35

ASH POND 2-LOOKING NORTH ALONG LINED DRAINAGE SWALE AT EMBANKMENT TOE

36

ASH POND 2-WOVEN AND PLASTIC FABRIC DRAINAGE SWALE PROTECTION

AMEC Earth & Environmental
690 Commonwealth Center
11003 Bluegrass Parkway
Louisville, Ky 40299
(502) 267-0700

CLIENT LOGO	CLIENT	UNITED STATES ENVIRONMENTAL PROTECTION AGENCY	
PROJECT: ASSESSMENT OF DAM SAFETY OF COAL COMBUSTION SURFACE IMPOUNDMENTS	DWN BY: CAE	DATUM:	DATE: 11/4/10
TITLE: AEP-SWEPCO/CLECO DOLET HILLS POWER STATION, MANSFIELD, LA OUTFALL 0002 SITE PHOTOS	CHK'D BY: MOS	REV. NO.:	PROJECT NO: 3-2106-0183.0004
	PROJECTION:	SCALE: AS SHOWN	APPENDIX: B-19

37

ASH POND 2-EROSION ON DRAINAGE SWALE OUTSIDE AND AWAY FROM DOWNSTREAM EMBANKMENT TOE

38

ASH POND 2-LOOKING UPSTREAM (EAST) AT ROADWAY EMBANKMENT STORM DRAIN

AMEC Earth & Environmental
690 Commonwealth Center
11003 Bluegrass Parkway
Louisville, Ky 40299
(502) 267-0700

CLIENT LOGO	CLIENT	UNITED STATES ENVIRONMENTAL PROTECTION AGENCY	
PROJECT: ASSESSMENT OF DAM SAFETY OF COAL COMBUSTION SURFACE IMPOUNDMENTS	DWN BY: CAE	DATUM:	DATE: 11/4/10
TITLE: AEP-SWEPCO/CLECO DOLET HILLS POWER STATION, MANSFIELD, LA OUTFALL 0002 SITE PHOTOS	CHK'D BY: MOS	REV. NO.:	PROJECT NO: 3-2106-0183.0004
	PROJECTION:	SCALE: AS SHOWN	APPENDIX: B-20

39

ASH POND 2-LOOKING DOWNSTREAM (WEST)
AT ROADWAY EMBANKMENT STORM DRAIN

40

ASH POND 2-LOOKING DOWNSTREAM (WEST)
AT ROADWAY EMBANKMENT STORM DRAIN

AMEC Earth & Environmental
690 Commonwealth Center
11003 Bluegrass Parkway
Louisville, Ky 40299
(502) 267-0700

CLIENT LOGO	CLIENT	UNITED STATES ENVIRONMENTAL PROTECTION AGENCY	
PROJECT: ASSESSMENT OF DAM SAFETY OF COAL COMBUSTION SURFACE IMPOUNDMENTS	DWN BY: CAE	DATUM:	DATE: 11/4/10
TITLE: AEP-SWEPCO/CLECO DOLET HILLS POWER STATION, MANSFIELD, LA OUTFALL 0002 SITE PHOTOS	CHK'D BY: MOS	REV. NO.:	PROJECT NO: 3-2106-0183.0004
	PROJECTION:	SCALE: AS SHOWN	APPENDIX: B-21

41
AUXILIARY SURGE POND-INFLUENT PIPE

42
AUXILIARY SURGE POND-DISCHARGE SPILLWAY

AMEC Earth & Environmental
690 Commonwealth Center
11003 Bluegrass Parkway
Louisville, Ky 40299
(502) 267-0700

CLIENT LOGO

CLIENT: UNITED STATES ENVIRONMENTAL PROTECTION AGENCY

PROJECT: ASSESSMENT OF DAM SAFETY OF COAL COMBUSTION SURFACE IMPOUNDMENTS	DWN BY: CAE	DATUM:	DATE: 11/4/10
TITLE: AEP-SWEPCO/CLECO DOLET HILLS POWER STATION, MANSFIELD, LA OUTFALL 0002 SITE PHOTOS	CHK'D BY: MOS	REV. NO.:	PROJECT NO: 3-2106-0183.0004
	PROJECTION:	SCALE: AS SHOWN	APPENDIX: B-22

43

AUXILIARY SURGE POND-DISCHARGE RECEIVING CHANNEL

44

AUXILIARY SURGE POND-LOOKING EAST FROM SOUTHWEST CORNER

AMEC Earth & Environmental
690 Commonwealth Center
11003 Bluegrass Parkway
Louisville, Ky 40299
(502) 267-0700

CLIENT LOGO	CLIENT	UNITED STATES ENVIRONMENTAL PROTECTION AGENCY	
PROJECT: ASSESSMENT OF DAM SAFETY OF COAL COMBUSTION SURFACE IMPOUNDMENTS	DWN BY: CAE	DATUM:	DATE: 11/4/10
TITLE: AEP-SWEPCO/CLECO DOLET HILLS POWER STATION, MANSFIELD, LA OUTFALL 0002 SITE PHOTOS	CHK'D BY: MOS	REV. NO.:	PROJECT NO: 3-2106-0183.0004
	PROJECTION:	SCALE: AS SHOWN	APPENDIX: B-23

45

AUXILIARY SURGE POND-LOOKING WEST FROM SOUTHWEST CORNER ALONG SURGE POND 1 EMBANKMENT

46

MONITORING WELL 33 LOCATED SOUTHEAST OF AUXILIARY SURGE POND

AMEC Earth & Environmental 690 Commonwealth Center 11003 Bluegrass Parkway Louisville, Ky 40299 (502) 267-0700	amec	CLIENT LOGO	CLIENT UNITED STATES ENVIRONMENTAL PROTECTION AGENCY	
PROJECT ASSESSMENT OF DAM SAFETY OF COAL COMBUSTION SURFACE IMPOUNDMENTS		DWN BY: CAE	DATUM:	DATE: 11/4/10
TITLE AEP-SWEPCO/CLECO DOLET HILLS POWER STATION, MANSFIELD, LA OUTFALL 0002 SITE PHOTOS		CHK'D BY: MOS	REV. NO.:	PROJECT NO: 3-2106-0183.0004
		PROJECTION:	SCALE: AS SHOWN	APPENDIX: B-24

47

LOOKING NORTHWEST ALONG BOTTOM OF EMBANKMENT ADJACENT TO AUXILIARY SURGE POND-SEE SURGE POND 1 EMBANKMENT IN DISTANCE

48

CONCRETE WELL BELOW AUXILIARY SURGE POND EMBANKMENT WITH 18-INCH CMP EXITING TO LEFT (WEST)

AMEC Earth & Environmental
690 Commonwealth Center
11003 Bluegrass Parkway
Louisville, Ky 40299
(502) 267-0700

PROJECT: ASSESSMENT OF DAM SAFETY OF COAL COMBUSTION SURFACE IMPOUNDMENTS	DWN BY: CAE	DATUM:	DATE: 11/4/10
TITLE: AEP-SWEPCO/CLECO DOLET HILLS POWER STATION, MANSFIELD, LA OUTFALL 0002 SITE PHOTOS	CHK'D BY: MOS	REV. NO.:	PROJECT NO: 3-2106-0183.0004
	PROJECTION:	SCALE: AS SHOWN	APPENDIX: B-25

CLIENT LOGO

CLIENT: UNITED STATES ENVIRONMENTAL PROTECTION AGENCY

49

BELOW AUXILIARY SURGE POND EMBANKMENT-LOOKING WEST ALONG SURGE POND 1 EMBANKMENT

50

SURGE POND 1-ANIMAL BURROW LOCATED ON SOUTH FACE OF EMBANKMENT

AMEC Earth & Environmental
690 Commonwealth Center
11003 Bluegrass Parkway
Louisville, Ky 40299
(502) 267-0700

CLIENT LOGO	CLIENT	UNITED STATES ENVIRONMENTAL PROTECTION AGENCY	
PROJECT: ASSESSMENT OF DAM SAFETY OF COAL COMBUSTION SURFACE IMPOUNDMENTS	DWN BY: CAE	DATUM:	DATE: 11/4/10
TITLE: AEP-SWEPCO/CLECO DOLET HILLS POWER STATION, MANSFIELD, LA OUTFALL 0002 SITE PHOTOS	CHK'D BY: MOS	REV. NO.:	PROJECT NO: 3-2106-0183.0004
	PROJECTION:	SCALE: AS SHOWN	APPENDIX: B-26

51

SURGE POND 1-LOOKING EAST ALONG SOUTHERN EMBANKMENT

52

SURGE POND 1-LOOKING WEST ALONG SOUTHERN EMBANKMENT

AMEC Earth & Environmental 690 Commonwealth Center 11003 Bluegrass Parkway Louisville, Ky 40299 (502) 267-0700	amec	CLIENT LOGO	CLIENT UNITED STATES ENVIRONMENTAL PROTECTION AGENCY	
PROJECT ASSESSMENT OF DAM SAFETY OF COAL COMBUSTION SURFACE IMPOUNDMENTS		DWN BY: CAE	DATUM:	DATE: 11/4/10
TITLE AEP-SWEPCO/CLECO DOLET HILLS POWER STATION, MANSFIELD, LA OUTFALL 0002 SITE PHOTOS		CHK'D BY: MOS	REV. NO.:	PROJECT NO: 3-2106-0183.0004
		PROJECTION:	SCALE: AS SHOWN	APPENDIX: B-27

53

SURGE POND 1-LOOKING EAST ACROSS NORTHERN CREST

54

SURGE POND 1-LOOKING SOUTHEAST ACROSS WEST END

AMEC Earth & Environmental
690 Commonwealth Center
11003 Bluegrass Parkway
Louisville, Ky 40299
(502) 267-0700

PROJECT: ASSESSMENT OF DAM SAFETY OF COAL COMBUSTION SURFACE IMPOUNDMENTS	DWN BY: CAE	DATUM:	DATE: 11/4/10
TITLE: AEP-SWEPCO/CLECO DOLET HILLS POWER STATION, MANSFIELD, LA OUTFALL 0002 SITE PHOTOS	CHK'D BY: MOS	REV. NO.:	PROJECT NO: 3-2106-0183.0004
	PROJECTION:	SCALE: AS SHOWN	APPENDIX: B-28

CLIENT LOGO

CLIENT: UNITED STATES ENVIRONMENTAL PROTECTION AGENCY

55

SURGE POND 1-MOSTLY SUBMERGED INFLUENT CULVERT

56

SURGE POND 2-MONITORING WELL 24 LOCATED AT SOUTHWEST CORNER

AMEC Earth & Environmental 690 Commonwealth Center 11003 Bluegrass Parkway Louisville, Ky 40299 (502) 267-0700	amec	CLIENT LOGO	CLIENT UNITED STATES ENVIRONMENTAL PROTECTION AGENCY	
PROJECT ASSESSMENT OF DAM SAFETY OF COAL COMBUSTION SURFACE IMPOUNDMENTS		DWN BY: CAE	DATUM:	DATE: 11/4/10
TITLE AEP-SWEPCO/CLECO DOLET HILLS POWER STATION, MANSFIELD, LA OUTFALL 0002 SITE PHOTOS		CHK'D BY: MOS	REV. NO.:	PROJECT NO: 3-2106-0183.0004
		PROJECTION:	SCALE: AS SHOWN	APPENDIX: B-29

57

SURGE POND 2-ANIMAL BURROW LOCATED BEHIND WALL SHOWN ADJACENT TO MONITORING WELL 24

58

SURGE POND 2-LOOKING SOUTH AT DOWNSTREAM EMBANKMENT

AMEC Earth & Environmental 690 Commonwealth Center 11003 Bluegrass Parkway Louisville, Ky 40299 (502) 267-0700	amec	CLIENT LOGO	CLIENT UNITED STATES ENVIRONMENTAL PROTECTION AGENCY	
PROJECT ASSESSMENT OF DAM SAFETY OF COAL COMBUSTION SURFACE IMPOUNDMENTS		DWN BY: CAE	DATUM:	DATE: 11/4/10
TITLE AEP-SWEPCO/CLECO DOLET HILLS POWER STATION, MANSFIELD, LA OUTFALL 0002 SITE PHOTOS		CHK'D BY: MOS	REV. NO.:	PROJECT NO: 3-2106-0183.0004
		PROJECTION:	SCALE: AS SHOWN	APPENDIX: B-30

59

SURGE POND 2-LOOKING WEST AT DOWNSTREAM EMBANKMENT

60

LANDFILL RUNOFF POND-LOOKING EAST ACROSS NORTH END OF POND

AMEC Earth & Environmental 690 Commonwealth Center 11003 Bluegrass Parkway Louisville, Ky 40299 (502) 267-0700	amec	CLIENT LOGO	CLIENT UNITED STATES ENVIRONMENTAL PROTECTION AGENCY	
PROJECT ASSESSMENT OF DAM SAFETY OF COAL COMBUSTION SURFACE IMPOUNDMENTS		DWN BY: CAE	DATUM:	DATE: 11/4/10
TITLE AEP-SWEPCO/CLECO DOLET HILLS POWER STATION, MANSFIELD, LA OUTFALL 0002 SITE PHOTOS		CHK'D BY: MOS	REV. NO.:	PROJECT NO: 3-2106-0183.0004
		PROJECTION:	SCALE: AS SHOWN	APPENDIX: B-30

59

SURGE POND 2-LOOKING WEST AT DOWNSTREAM EMBANKMENT

60

LANDFILL RUNOFF POND-LOOKING
EAST ACROSS NORTH END OF POND

AMEC Earth & Environmental 690 Commonwealth Center 11003 Bluegrass Parkway Louisville, Ky 40299 (502) 267-0700	amec	CLIENT LOGO	CLIENT UNITED STATES ENVIRONMENTAL PROTECTION AGENCY	
PROJECT ASSESSMENT OF DAM SAFETY OF COAL COMBUSTION SURFACE IMPOUNDMENTS		DWN BY: CAE	DATUM:	DATE: 11/4/10
TITLE AEP-SWEPCO/CLECO DOLET HILLS POWER STATION, MANSFIELD, LA OUTFALL 0002 SITE PHOTOS		CHK'D BY: MOS	REV. NO.:	PROJECT NO: 3-2106-0183.0004
		PROJECTION:	SCALE: AS SHOWN	APPENDIX: B-31

61
LANDFILL RUNOFF POND-LOOKING
SOUTHWEST ALONG EMBANKMENT CREST

62
LANDFILL RUNOFF POND-LOOKING SOUTHWEST
ALONG DOWNSTREAM EMBANKMENT

AMEC Earth & Environmental
690 Commonwealth Center
11003 Bluegrass Parkway
Louisville, Ky 40299
(502) 267-0700

CLIENT LOGO	CLIENT	UNITED STATES ENVIRONMENTAL PROTECTION AGENCY	
PROJECT: ASSESSMENT OF DAM SAFETY OF COAL COMBUSTION SURFACE IMPOUNDMENTS	DWN BY: CAE	DATUM:	DATE: 11/4/10
TITLE: AEP-SWEPCO/CLECO DOLET HILLS POWER STATION, MANSFIELD, LA OUTFALL 0002 SITE PHOTOS	CHK'D BY: MOS	REV. NO.:	PROJECT NO: 3-2106-0183.0004
	PROJECTION:	SCALE: AS SHOWN	APPENDIX: B-32

63

LANDFILL RUNOFF POND-VALVE CONTROL AT DISCHARGE

64

LANDFILL RUNOFF POND-SLUMP
ADJACENT TO POND DISCHARGE VALVE

AMEC Earth & Environmental 690 Commonwealth Center 11003 Bluegrass Parkway Louisville, Ky 40299 (502) 267-0700	amec	CLIENT LOGO	CLIENT UNITED STATES ENVIRONMENTAL PROTECTION AGENCY	
PROJECT ASSESSMENT OF DAM SAFETY OF COAL COMBUSTION SURFACE IMPOUNDMENTS		DWN BY: CAE	DATUM:	DATE: 11/4/10
TITLE AEP-SWEPCO/CLECO DOLET HILLS POWER STATION, MANSFIELD, LA OUTFALL 0002 SITE PHOTOS		CHK'D BY: MOS	REV. NO.:	PROJECT NO: 3-2106-0183.0004
		PROJECTION:	SCALE: AS SHOWN	APPENDIX: B-33

65
LANDFILL RUNOFF POND-TREES ON
DOWNSTREAM TOE OF EMBANKMENT

66
LANDFILL RUNOFF POND-LOOKING
NORTHEAST ACROSS EMERGENCY SPILLWAY

AMEC Earth & Environmental
690 Commonwealth Center
11003 Bluegrass Parkway
Louisville, Ky 40299
(502) 267-0700

CLIENT LOGO	CLIENT	UNITED STATES ENVIRONMENTAL PROTECTION AGENCY	
PROJECT: ASSESSMENT OF DAM SAFETY OF COAL COMBUSTION SURFACE IMPOUNDMENTS	DWN BY: CAE	DATUM:	DATE: 11/4/10
TITLE: AEP-SWEPCO/CLECO DOLET HILLS POWER STATION, MANSFIELD, LA OUTFALL 0002 SITE PHOTOS	CHK'D BY: MOS	REV. NO.:	PROJECT NO: 3-2106-0183.0004
	PROJECTION:	SCALE: AS SHOWN	APPENDIX: B-34

67
LANDFILL RUNOFF POND-LOOKING
EAST AT EMERGENCY SPILLWAY

68
LANDFILL RUNOFF POND-DOWNSTREAM
PORTION OF EMERGENCY SPILLWAY

AMEC Earth & Environmental
690 Commonwealth Center
11003 Bluegrass Parkway
Louisville, Ky 40299
(502) 267-0700

CLIENT LOGO	CLIENT	UNITED STATES ENVIRONMENTAL PROTECTION AGENCY	
PROJECT: ASSESSMENT OF DAM SAFETY OF COAL COMBUSTION SURFACE IMPOUNDMENTS	DWN BY: CAE	DATUM:	DATE: 11/4/10
TITLE: AEP-SWEPCO/CLECO DOLET HILLS POWER STATION, MANSFIELD, LA OUTFALL 0002 SITE PHOTOS	CHK'D BY: MOS	REV. NO.:	PROJECT NO: 3-2106-0183.0004
	PROJECTION:	SCALE: AS SHOWN	APPENDIX: B-35

69

LANDFILL RUNOFF POND-LOOKING SOUTHWEST
AT POND INFLUENT PIPE

70

LANDFILL RUNOFF POND-LOOKING NORTHEAST
AT POND INFLUENT CHANNEL

AMEC Earth & Environmental 690 Commonwealth Center 11003 Bluegrass Parkway Louisville, Ky 40299 (502) 267-0700	amec	CLIENT LOGO	CLIENT UNITED STATES ENVIRONMENTAL PROTECTION AGENCY	
PROJECT ASSESSMENT OF DAM SAFETY OF COAL COMBUSTION SURFACE IMPOUNDMENTS		DWN BY: CAE	DATUM:	DATE: 11/4/10
TITLE AEP-SWEPCO/CLECO DOLET HILLS POWER STATION, MANSFIELD, LA OUTFALL 0002 SITE PHOTOS		CHK'D BY: MOS	REV. NO.:	PROJECT NO: 3-2106-0183.0004
		PROJECTION:	SCALE: AS SHOWN	APPENDIX: B-36

APPENDIX C
Inventory of Provided Materials

DHPS Solid Waste

- 11_8 Response to Dolet Hills Draft Assessment Report Questions.txt
- 11_15 Response to Dolet Hills Assessment Report Questions.txt
- Bottom Ash Ponds Updated Mand. Modifications.pdf
- CBI_Dolet Ash Pond Slope Failure Investigation Nov 1 1993 .pdf
- CBI_Dolet Ash Ponds Seepage Impact Assessment Plan Oct 1988 .pdf
- CBI_Dolet Surge Pond const pics by LDEQ Sept 1985.pdf
- CBI_Dolet Surge Ponds initial compliance inspection Sept 1985.pdf
- CBI_Dolet Wastewater Ponds Const Verif Program Oct 2 1984.pdf
- cleco_dolethills_RRFI.pdf
- DHPS2006WaterBalance (2).pdf
- DHPS Water level summary (Landfill).pdf
- Dolet Oct 1988 Ash Ponds Geotech Investigation.pdf
- Dolet original impoundment permit applicaiton March 1985 .pdf
- Dolet water level summaries Impoundments.pdf
- FA Scrubber Sldg Lanfill Monit. Well and Piez. Location Map.pdf
- LDEQWaterDischargePermit (2).pdf
- Surge_Aux. Surge Ponds Updated Mand. Modifications.pdf

Comments on Draft Assessment Report, by EPA, and Louisiana Department of Transportation and Development, Dam Safety Program, undated