Report of Dam Safety Assessment of Coal Combustion Surface Impoundments
Dayton Power and Light Company
O.H. Hutchings Electric Generating Station
Miamisburg, OH

AMEC Project No. 3-2106-0177.0006

Prepared By:

AMEC Earth & Environmental, Inc.
690 Commonwealth Center
11003 Bluegrass Parkway
Louisville, KY 40299

Prepared For:

Mr. Stephen Hoffman
U.S. EPA
Emergency Response Service Center
1200 Pennsylvania Ave., NW
Washington, DC 20460

September 2010

DRAFT

I certify that the management units referenced herein:

Dayton Power and Light Company, O.H. Hutchings Electric Generating Station: East Primary Settling Pond, West Primary Settling Pond, and Secondary Settling Pond were assessed on August 18, 2010.

Signature _____

Don Dotson, PE
Senior Geotechnical Engineer

List of AMEC Participants who have participated in the assessment of the management units and in preparation of the report:

- Chris Eger
  CADD Technician
- Dan Conn
  GIS Specialist
- Mary Swiderski, EIT
  Staff Engineer

DRAFT

TABLE OF CONTENTS

SECTION **PAGE NO.**

1.0 INTRODUCTION AND PROJECT DESCRIPTION 1

1.1 Introduction 1
1.2 Project Background 1
1.2.1 State Issued Permits 4
1.3 Site Description and Location 4
1.4 Process Ponds 4
1.4.1 Ash Handling and Flow Summary 4
1.4.2 Ash Ponds 5
1.5 Previously Identified Safety Issues 6
1.6 Site Geology 6
1.7 Inventory of Provided Materials 6

2.0 FIELD ASSESSMENT 7

2.1 Visual Observations 7
2.2 East Primary Settling Pond -Visual Observations 7
2.2.1 East Primary Settling Pond - Embankments and Crest 8
2.2.2 East Primary Settling Pond - Outlet Control Structure 8
2.3 West Primary Settling Pond -Visual Observations 8
2.3.1 West Primary Settling Pond - Embankments and Crest 8
2.3.2 West Primary Settling Pond - Outlet Control Structure 9
2.4 Secondary Settling Pond -Visual Observations 9
2.4.1 Secondary Settling Pond - Embankments and Crest 9
2.4.2 Secondary Settling Pond - Outlet Control Structure 9
2.5 Monitoring Instrumentation 10

3.0 DATA EVALUATION 11

3.1 Design Assumptions 11
3.2 Hydrologic and Hydraulic Design 11
3.2.1 Ash Ponds 14
3.3 Structural Adequacy & Stability 15
3.3.1 Hutchings Ash Pond Structural Adequacy & Stability 15
3.4 Foundation Conditions 17
3.5 Operations and Maintenance 17
3.5.1 Instrumentation 17
3.5.2 Inspections 17

4.0 COMMENTS AND RECOMMENDATIONS 21

4.1 Acknowledgement of Management Unit Conditions 21
4.2.1 Hydrologic and Hydraulic Recommendations 21
4.2.2 Geotechnical and Stability Recommendations 22
4.2.3 Monitoring and Instrumentation Recommendations 22
4.2.4 Inspection Recommendations 22

5.0 CLOSING 23

DRAFT

TABLES

Table 1. Site Visit Attendees 1
Table 2. Hutchings Station Rainfall Data 7
Table 3. MSHA Minimum Long Term Hydrologic Design Criteria 13
Table 4. Minimum Required Dam Safety Factors 15
Table 5. Laboratory Test Results 16
Table 6. Soil Parameters 16
Table 7. Factors of Safety 16

FIGURES

Site Location & Vicinity Map ..... Figure 1
Site Map ..... Figure 2
Critical Infrastructure Map ..... Figure 3
Surficial Geologic Map ..... Figure 4
Plan View of Ash Ponds ..... Figure 5
Plan View of Secondary Settling Pond ..... Figure 6
East and West Primary Settling Pond Cross Sections ..... Figure 7
1976 Slope Stability Cross-Sections and Boring Locations. ..... Figure 8

APPENDICES

EPA Coal Combustion Dam Inspection Checklists and Coal Combustion Waste Impoundment Inspection Forms - August 2010 ..... Appendix A
Site Photo Log Maps and Site Photos ..... Appendix B
Inventory of Provided Materials ..... Appendix C

DRAFT

1.0 INTRODUCTION AND PROJECT DESCRIPTION

1.1 Introduction

AMEC Earth and Environmental, Inc. (AMEC) was contracted by the United States Environmental Protection Agency (EPA), via contract BPA EP09W001702, to perform site assessments of selected coal combustion byproducts surface impoundments. As part of this contract with EPA, AMEC was assigned to perform a site assessment of Dayton Power and Light Company (DP&L) O.H. Hutchings Station. Hutchings Station is located approximately 0.8 miles south of Miamisburg, Ohio as shown on Figure 1, the Project Location Map.

A site visit to Hutchings Station was made by AMEC on August 18, 2010. The purpose of the visit was to perform visual observations, to inventory coal combustion waste (CCW) surface impoundments, assess the containment dikes, and to collect relevant historical impoundment documentation.

AMEC engineers, Don Dotson, PE and Mary Swiderski, EIT were accompanied during the site visit by the following individuals:

Table 1. Site Visit Attendees

Company or Organization	Name and Title
Dayton Power and Light Company	Scott Arentsen, Environmental Specialist
Dayton Power and Light Company	Robert A. Cary, Maintenance Manager
Dayton Power and Light Company	John Hendrix, PE
Dayton Power and Light Company	Kris E. Singleton, Environmental Health & Safety Engineer
Ohio Dam Safety	Keith Banachowski, PE, Program Manager

1.2 Project Background

CCW results from the power production processes at coal fired power plants. Impoundments (dams) are designed and constructed to provide storage and disposal for the CCW that are produced. DP&L refers to the three CCW impoundments at the Hutchings Station as the “East Primary Settling Pond”, “West Primary Settling Pond”, and “Secondary Settling Pond”.

The Ohio Department of Natural Resources (ODNR) Division of Soil and Water Resources Dam Safety Program defines the term *dam*, as well as regulates dam design, construction, and repair. According to ODNR, a dam is defined as “an artificial barrier usually constructed across a stream channel to impound water.” ODNR evaluates the height of the dam, storage volume, and potential downstream hazard to determine and assign a dam hazard classification to each structure. ODNR has established rules regarding Dams and Dam Safety which provides minimum hydrologic and hydraulics related design criteria, as well as hazard classification definitions for dam structures. Dam hazard classifications include Class I, II, III, and IV. According to Ohio Administration Code (OAC) Rule 1501:21-13-01, Paragraph A, Classification of Dams, the dam classifications are described as follows:

DRAFT

- A Class I dam classification is assigned to structures "having a total storage volume greater than five thousand acre-feet or a height of greater than sixty feet. A dam shall be placed in Class I when sudden failure of the dam would result in one of the following conditions:"

    a) Probable loss of human life.
    b) Structural collapse of at least one residence or one commercial or industrial business.

- A Class II dam classification is assigned to structures "having a total storage volume greater than five hundred acre-feet or a height of greater than forty feet. A dam shall be placed in Class II when sudden failure of the dam would result in one of the following conditions, but loss of human life is not probable:"

    a) Disruption of public water supply or wastewater treatment facility, release of health hazardous industrial or commercial waste, or other health hazards.
    b) Flooding of residential, commercial, industrial, or publicly owned structures.
    c) Damage or disruption to major roads including but not limited to interstate and state highways, and the only access to residential or other critical areas such as hospitals, nursing homes, or correctional facilities as determined by the chief.
    d) Damage or disruption to railroads or public utilities.
    e) Damage to downstream class I, II, or III dams or levees, or other dams or levees of high value. Damage to dams or levees can include, but is not limited to, overtopping of the structure.

- A Class III dam classification is assigned to structures "having a total storage volume greater than fifty acre-feet or a height of greater than twenty-five feet. A dam shall be placed in Class III when sudden failure of the dam would result in one of the following conditions, but loss of human life is not probable:"

    a) Property losses including but not limited to rural buildings not otherwise described in paragraph (A) of this rule, and class IV dams and levees not otherwise listed as high-value property in paragraph (A) of this rule. At the request of the dam owner, the chief may exempt dams from the criterion of this paragraph if the dam owner owns the potentially affected property.
    b) Damage or disruption to local roads including but not limited to roads not otherwise listed as major roads in paragraph (A) of this rule.

- A Class IV dam classification is assigned to structures "which are twenty-five feet or less in height and have a total storage volume of fifty acre-feet or less may be placed in Class IV. When sudden failure of the dam would result in property losses restricted mainly to the dam and rural lands, and loss of human life is not probable, the dam may be placed in Class IV. Class IV dams are exempt from the permit requirements…"

A dam is exempt from the state's authority under OAC Section 1521.06 if it is 6 feet or less in height regardless of total storage, less than 10 feet in height with not more than 50 acre-feet of storage, or not more than 15 acre-feet of total storage regardless of height.

DRAFT

Each dam is evaluated on the preceding criteria and placed in the highest class that any one of these criteria might meet (height of dam, storage volume, or potential downstream hazard). ODNR may reclassify any dam as a result of a change in circumstance not in existence at the time of the initial classification.

According to OAC Rule 1501:21-21 Periodic Inspection, "the chief [of ODNR] shall make periodic inspections and evaluations of all class I, class II, and class III dams and levees to assure that their continued operation and use does not constitute a hazard to life, health, or property." The term "periodic" is not defined. Class IV dams are inspected as deemed necessary by the chief. At the time of the inspection, the dam classification shall be reviewed and may be changed as a result of the inspection, if necessary.

An inspection was first completed by ODNR on November 17, 2009 of the three ash ponds at Hutchings Station. Prior to this first inspection, ODNR's database indicated the ponds were incised, and did not warrant an inspection. The state had therefore permitted the three ponds as one unit, and refered to them as the Hutchings Station Ash Pond Dam. After a review of DP&L's response to EPA's Request for Information under Section 104(e) of the Comprehensive Environmental Response and two-foot contour maps, ODNR realized the ponds were a regulated structure. ODNR classified the Ash Pond as a Hazard Class II. According to the ODNR Dam Classification Checklist, both the height classification and storage classification result in a Hazard Class III. The Potential Downstream Hazard chart contained in the ODNR inspection report indicates that a failure of the structure would result in "loss of public water supply or wastewater treatment facility, release of health hazardous waste" and "flooding of structure or high-value property" which qualifies for a Hazard Class II. The rules state the dam is to be placed in the highest class that any of the criteria meet, therefore the dam is classified as Class II.

The National Inventory of Dams (NID), administered by the U.S. Army Corps of Engineers (USACE), provides a list of many dams within the United States, as well as hazard potentials related to the listed dams. The information is provided to the USACE for inclusion in the NID database primarily by the states. The ash ponds at the Hutchings Station are not included within the NID database.

As part of the observations and evaluations performed at Hutchings Station, AMEC completed EPA's Coal Combustion Dam Inspection Checklists and Coal Combustion Waste (CCW) Impoundment Inspection Forms. Copies of the ash Impoundment Inspection Forms are provided in Appendix A. The Impoundment Inspection Forms include a section that assigns a "Hazard Potential" to indicate what would occur following failure of an impoundment. "Hazard Potential" choices include "Less than Low," "Low," "Significant," and "High." Based on the site visit evaluation of the impoundments, AMEC engineers assigned a "Significant Hazard Potential" classification to each of the Hutchings Ash Ponds. As defined on the Inspection Form, dams assigned a "Significant Hazard Potential" classification are those dams where failure or misoperation results in no probable loss of human life but can cause economic loss, environmental damage, disruption of lifeline facilities, or can impact other concerns. Significant hazard potential classification dams are often located in predominantly rural or agricultural areas but could be located in areas with population and significant infrastructure. AMEC assigned the "Significant Hazard Potential" classification to these impoundments based on their proximity to the Great Miami River.

DRAFT

1.2.1 State Issued Permits

The Ohio Environmental Protection Agency (EPA) has issued National Pollutant Discharge Elimination System Permit No. OH0009261 to Dayton Power and Light Company. The permit provided by the Ohio EPA authorizes DP&L to discharge from O.H. Hutchings Electric Generating Station to the Great Miami River. The permit became effective on August, 2009 and will expire on July 31, 2014.

1.3 Site Description and Location

DP&L Hutchings Station is located approximately 0.8 miles south of Miamisburg, Ohio. The area surrounding the plant boundary is a mixture of commercial and residential development. The Site Location and Vicinity Map, included as Figure 1, illustrates the location of Hutchings Station relative to Miamisburg. The Great Miami River is located to the north, east, and south of the plant facilities. The distance between the closest point of the ash pond and the Great Miami River is approximately 70 feet, 50 feet to Chautauqua Road, and 125 feet to the Power Plant. The Photo Site Plan, included as Figure 2, shows the location of the Ash Ponds and their proximity to the Great Miami River.

An aerial photograph of the region indicating the location of Hutchings Station ash ponds in relation to schools, hospitals, and other critical infrastructure located within approximately 5 miles downstream of the structures is included as Figure 3, the Critical Infrastructure Map. A table that provides names and coordinate data for the infrastructure is included on the map.

1.4 Process Ponds

1.4.1 Ash Handling and Flow Summary

Hutchings Station consumes coal in the production of electricity. In this process, two types of CCW ash are generated: bottom ash and fly ash. Typically, power plants like Hutchings discharge CCW by wet sluicing it into large impoundments designed to hold the CCW solids as well as the liquid added for sluicing. In addition to the fly ash and bottom ash transport water, the ponds also receive wastewater from several sources including: coal yard runoff, boiler rinse water, boiler blow down water, spent deepwell bleaching, treated boiler cleaning wastewater, and filter system backwash. Currently, all three ponds at Hutchings Station are active, the East and West Settling Ponds directly receive ash. After settling, water flows by gravity to the Secondary Settling Pond.

According to the Ash System Narrative provided by DP&L, Hutchings Station disposes of bottom ash (the heavier of the two types) and fly ash from Units 1 through 6 through pipelines as wet slurry to the East or West Settling Pond. The east and west ponds are not active simultaneously. At the time of the site visit, only the east pond was active. The inactive pond is periodically dredged and the removed ash is taken offsite and used for beneficial reuse. After settling, water will flow by gravity from the East or West Primary Settling Pond to the Secondary Settling Pond. Water from the secondary pond flows by gravity to the pressure filter system, which removes any suspended solids to a level acceptable to the Ohio EPA. Discharge from the pressure filter system flows by means of three filter pumps to the Great Miami River via NPDES permitted outfalls (Outfall 002) or as filter backwash water to the east or west ash pond.

DRAFT

1.4.2 Ash Ponds

The following information was provided by DP&L in their response to EPA's Request for Information under Section 104(e) dated March 12, 2009. The three ash ponds at Hutchings Station were designed and constructed under the direction of a professional engineer, and were commissioned circa 1964. Currently the ponds are not inspected by a professional engineer. The maximum height of the three units was reported to the EPA to be 18 feet. However, the 2009 Dam Safety Inspection report provided by ODNR indicates a dam height of 28 feet. Provided design drawings (1301-11-1902 and 1301-11-1913) were reviewed by AMEC and indicate a maximum embankment height of approximately 23 feet for the East and West Settling Ponds, and 16 feet for the Secondary Settling Pond. The 2009 inspection report prepared by ODNR lists upstream and downstream slopes at the Hutchings Station as 2.5H:1V. The ODNR report lists the pond drainage area as 0.02 square miles, or 14.5 acres.

East Primary Settling Pond

DP&L's response to the EPA March 2009 information request indicate the East Primary Settling Pond has a total storage capacity of 90,000 tons (AMEC estimates 81 acre-feet) and an April 2009 estimate indicates an in-place ash quantity of 20,000 tons. According to the EPA response, the corresponding surface area is 4.5 acres.

Review of a provided design drawing (1301-11-1902) by AMEC indicate a 2.5H:1V slope along the interior dikes of the common embankment between the East Primary Settling Basin and West Primary Settling Basin. Section C-C of this drawing illustrates an area along the northern section of the east downstream dike of the East Settling Pond with a downstream slope of 2H:1V. A toe berm with a slope of 2.5H:1V constructed 16 feet from the dam crest had been proposed along this cross section. Section D-D labeled "Typical repair method of the dike", is located along the southern portion of the eastern downstream dike of the East Settling Pond and illustrates a repair of the sloughed area. This included a five-foot bench above the repair area, excavating soil from the sloughed area, and filling with coarse stone. Filter fabric was to be placed around the surrounding soil. Downstream slopes of 1H:2.5V are noted along the upper portion of the cross section and slopes for the repair section were reported as 1H:3V. We note that provided drawings did not illustrate a typical cross section around the north or south dike of the East Primary Settling Pond. A plan view and cross sections of the East Primary Settling Pond is included as Figures 4 and 7.

A report entitled *Soil Investigation in Area of Ash Ponds and Treatment Facilities, O.H. Hutchings Station, Chautauqua, Ohio* prepared by Bowser-Morner Testing Laboratories, Inc. dated May 17, 1976, discusses a slope stability analyses performed. Within the report, a drawing entitled "Boring Location Plan," illustrates a line along the eastern dike of the east pond labeled "approximate line of seepage." Additionally, the plan identifies two areas along the eastern dike of "existing slides." The report states that "an on-site inspection was performed on April 21, 1976 to determine the general conditions of the existing dikes. More specifically, seepage conditions and the locations and extent of existing slides were determined." No further information was provided regarding the observed seepage or slides.

West Primary Settling Pond

DP&L's response to the EPA March 2009 information request state that the West Primary Settling Pond has a total storage capacity of 120,000 tons (AMEC estimates 131 acre-feet) and an April 2009 estimate indicates an in-place ash quantity of 63,000 tons. The corresponding surface area is 7.3 acres. Review of a provided design drawing (1301-11-1902) by AMEC indicate a 2.5H:1V along the interior dikes of the common embankment between the East

DRAFT

Primary Settling Basin and West Primary Settling Basin. Provided drawings did not illustrate a typical cross section around the north, south, or west dike of the West Primary Settling Pond. A plan view and cross section of the West Primary Settling Pond is included as Figures 4 and 7.

Secondary Settling Pond

DP&L's response to the EPA March 2009 information request indicate the Secondary Settling Pond has a total storage capacity of 9,000 cubic yards (CY) (AMEC estimates 5.4 acre-feet) and an April 2009 estimate indicates an in-place ash quantity of 7,000 CY. The corresponding surface area is 0.3 acres. Provided drawings did not illustrate typical cross sections around the Secondary Settling Pond. A plan view of the Secondary Settling Pond is included as Figure 6.

Drawing 1301-11-1910 provided by DP&L illustrates a grout curtain located to the east of the treatment building along the Secondary Settling Pond east crest. Drawing 1301-11-1913 provides a detail of the grout curtain, and states "install grout curtain care taken to avoid damage to 21-inch reinforced concrete pipe (depth may vary)". The drawing indicates the curtain extends from approximate elevation 708 feet to 680.0 feet or lower, at approximately station 0+85. No information was provided regarding the installation of the grout curtain.

1.5 Previously Identified Safety Issues

Discussions with plant personnel and review of provided documentation indicate that there are no current or previously identified safety issues at the Hutchings Station impoundments.

1.6 Site Geology

The United States Geological Investigations Series I-2789 indicates the surficial geology for the Hutchings site is alluvial, outwash, ice-contact, and glacial-lake deposits. Figure 4 is included to illustrate local geology.

1.7 Inventory of Provided Materials

DP&L provided AMEC with numerous documents pertaining to the design and operation of Hutchings Station. These documents were used in the preparation of this report and are listed in Appendix C, Inventory of Provided Materials.

DRAFT

2.0 FIELD ASSESSMENT

2.1 Visual Observations

AMEC performed visual assessments of the Hutchings Station ash ponds on August 18, 2010. Assessment of the ash ponds were completed in general accordance with *FEMA's Federal Guidelines for Dam Safety, Hazard Potential Classification System for Dams, April 2004*. The EPA Coal Combustion Dam Inspection Checklist and Coal Combustion Waste (CCW) Impoundment Inspection Forms were completed for the ash ponds during the site visit. The completed forms were provided to the EPA via email five business days following the site visit. Copies of the completed checklists are included in Appendix A. In addition to completing the checklist and assessment forms, photographs were taken of the impoundment during the site visit. A photo site location map and descriptive photos are included in Appendix B. Rainfall data for the Miamisburg, Ohio area was collected for the 30 days prior to the site visit. Table 2, below, summarizes the rainfall data for the days immediately preceding AMEC's site visit.

Table 2. Hutchings Station Rainfall Data

Rainfall Prior to Site Visit	
Date	**Rainfall (in.)**
August 10, 2010	0.00
August 11, 2010	0.01
August 12, 2010	0.01
August 13, 2010	0.00
August 14, 2010	0.38
August 15, 2010	0.04
August 16, 2010	0.00
August 17, 2010	0.00
Total (7 days prior to visit)	**0.44**
Total (30 days prior to visit)	**2.36**

Source: Weather Underground (wunderground.com) for the Dayton Wright Airport Area.

2.2 East Primary Settling Pond -Visual Observations

The East Primary Settling Pond contains fly ash and bottom ash. At the time of AMEC's field inspection, the pond was receiving CCW. The inlet from the plant is located at the southwest corner of the pond (photo E-4). The western dike of the ash pond is a dividing dike shared with the West Primary Settling Pond. The Great Miami River is located along the northern and eastern downstream toe.

DRAFT

2.2.1 East Primary Settling Pond - Embankments and Crest

The East Primary Settling Pond has a diked configuration. Because survey data was not available and gauges are not located within the pond, freeboard was not able to be determined. The northern, eastern, and southern crest and dikes (upstream and downstream) of the dam are primarily surfaced with grass and heavy vegetation (photos E-1, E-4, E-7, E-13, and E-16). Heavy vegetation included grasses, brush, and trees up to 6 inches in diameter. The surface of the common dike is covered with an 8-inch crushed stone surface (photo E-2). Animal burrows were observed along the eastern crest. Several low spots and erosion rills were present along the crest and interior slope of the common dike (photo E-17). Erosion was observed along the southern interior slopes. Wet areas were noted along the southern downstream toe. According to site personnel, ponding water is typical in this area (photos E-11, E-12 and E-13). A storm drain and 7-foot diameter pipe outlet was present along the southwestern downstream toe (photo E-14 and E-15). Filter backwash from the treatment plant was observed in the north western portion of the pond (photo E-20); two power poles indicated the location of the backwash (photo E-5).

2.2.2 East Primary Settling Pond - Outlet Control Structure

The primary outlet is located within the northwestern portion of the pond. The outlet is a 24-inch concrete vertical structure with trash rack (photos E-6 and E-19). Flow from the primary outlet structure is conveyed through a 24-inch reinforced concrete pipe (RCP) located beneath the common dike crest between the east and west ponds. The West Primary Settling Pond discharges to the same concrete pipe. Flow from the concrete pipe moves by gravity and discharges into the Secondary Settling Pond. At the time of the site visit, the outlet into the Secondary Settling Pond was submerged and could not be observed.

As originally constructed, there was a double head-wall system between the east and west ponds. The concrete structure consisted of an adjustable stop log unit which facilitated water level adjustment as needed, based on facility operations. This outlet connected to the same 24-inch concrete pipe currently used. Due to maintenance issues, the headwall system was replaced with the vertical structure.

The emergency overflow is an 18-inch RCP located along the northwestern interior dike of the pond 50 feet south of the primary outlet (photos E-8 and E-18). Flow from the pipe is discharged into the West Primary Settling Pond.

2.3 West Primary Settling Pond -Visual Observations

The West Primary Settling Pond contains fly ash and bottom ash. At the time of AMEC's field inspection, the pond was inactive. The inlet from the plant is located at the southeast corner of the pond (photos W-7, W-8, and W-9). The eastern dike of the ash pond is a dividing dike shared with the East Primary Settling Pond. The northern dike is a shared dike with the Secondary Settling Pond. Railroad tracks were located along the Western dike (photos W-5 and W-14).

2.3.1 West Primary Settling Pond - Embankments and Crest

The West Primary Settling Pond has a diked configuration. Because survey data was not available and gauges are not located within the pond, freeboard was not able to be determined. The southern crest and dikes (upstream and downstream) and western interior of the dam are

primarily surfaced with grass and heavy vegetation (photos W-2, W-5 and W-10). Heavy vegetation included grasses, brush, and trees up to 2 inches in diameter. The surface of the common dike is covered with an approximately 8-inch thick crushed stone surface (photo E-2). Several low spots and erosion rills which could affect freeboard were observed along the crest of the common dike (photo W-16). Erosion was noted along the southern interior slopes (photo W-11). Wet areas were suspected along the southern downstream toe due to wetland vegetation (cattails shown in photo W-13), however due to the density of the vegetation, could not be confirmed.

2.3.2 West Primary Settling Pond - Outlet Control Structure

The primary outlet is located within the northeastern portion of the pond. The outlet is a head-wall system with an adjustable stop log unit which facilitates water level adjustment as needed, based on facility operations (photos W-15, W-18, W-19, and W-20). Flow from the primary outlet structure is conveyed through a 24-inch (RCP) which is located beneath the common dike crest between the east and west ponds. The East Primary Settling Pond discharges to the same concrete pipe. Flow from the concrete pipe moves by gravity and discharges into the Secondary Settling Pond. At the time of the site visit, the water level in the Secondary Settling Pond was approximately two feet higher than the pond water, reversing the flow of water into the west pond and submerging the outlet in the secondary pond. The outlet into the Secondary Settling Pond could not be observed.

The emergency overflow is an 18-inch RCP located along the northeastern interior dike of the pond 50 feet south of the primary outlet (photo W-17). Flow from the pipe is discharged into the West Primary Settling Pond.

2.4 Secondary Settling Pond -Visual Observations

The Secondary Settling Pond contains fly ash, bottom ash, and water from the oily waste pond. The inlet from the east and west pond is located along the southern interior dike, however the inlet was submerged at the time of the site visit. The southern dike of the ash pond is a dividing dike shared with the West Primary Settling Pond. Railroad tracks were located along the western dike (photos S-1 and S-4). The treatment facility is located along the eastern dike (photo S-2). The Great Miami River is located along the northern downstream toe.

2.4.1 Secondary Settling Pond - Embankments and Crest

The Secondary Settling Pond has a diked configuration. Because survey data was not available and gauges are not located within the pond, freeboard was not able to be determined. The crest and dikes (upstream and downstream) of the dam are primarily surfaced with grass and/or heavy vegetation (photos S-1, S-3, S-4, S-5, and S-6). Heavy vegetation included grasses, brush, and trees up to 6 inches in diameter. An irregular surface was noted along the northern downstream toe.

2.4.2 Secondary Settling Pond - Outlet Control Structure

The primary outlet is located within the northeastern portion of the pond. Flow from the primary outlet structure is conveyed through a 21-inch RCP. Flow in the pipe moves by gravity to the pressure filter system. Once treated, the filter system discharges the filtered water via pumps to the Great Miami River or to the east or west pond as filter backwash water. At the time of the site visit, the inlet to the primary outlet could not be observed due to heavy vegetation. Water

DRAFT

was observed flowing within the manhole that is located between the pond outlet and NPDES outlet along the Great Miami River (photos S-7 and S-8). Due to heavy vegetation the outlet along the Great Miami River was not observed.

Drawing titled "Secondary Settling Pond Site Plan" dated August 1977 indicates a secondary 24-inch RCP outlet. The drawing states that the "outlet structure to act as a temporary discharge during construction." Existence/removal of the pipe cannot be confirmed due to dense vegetation at the time of the site visit.

2.5 Monitoring Instrumentation

At the time of AMEC's site visit, one monitoring well was observed along the southern portion of the eastern crest of the East Primary Settling Pond (photo E-10). Site personnel indicated that additional monitoring wells were recently discovered, however, are not monitored.

DRAFT

3.0 DATA EVALUATION

3.1 Design Assumptions

This section provides a summary of accepted minimum design criteria for dams and impoundments with respect to hydrologic, hydraulic, and stability design of those structures. The relevant methodology, design criteria, data, and analyses that were provided for the Hutchings Station ash ponds concerning hydrologic and hydraulic issues, as well as for structural adequacy and stability issues is then presented and compared to the accepted minimum industry criteria.

3.2 Hydrologic and Hydraulic Design

ODNR

Design flood for dams and determination of critical flood is determined from OAC Rule 1501:21-13-02. This rule provides the magnitude of the design flood for all dams that are constructed within the state of Ohio.

> *The magnitude of the flood event for each dam is set by the chief, and determined from actual streamflow and flood frequency records or from synthetic hydrologic criteria based on current publications prepared by the division, the United States corps of engineers, the United States geological survey, the national oceanic and atmospheric administration, or others acceptable to the chief.*

Precipitation values to be used in determination of the minimum design flood for Class I, II, and III dams are provided by Rule 1501:21-13-02 and are as follows.

Minimum Design Flood

Class (I)	Probable Maximum Flood (PMF) or the critical flood
Class (II)	Fifty percent of the PMF or the critical flood
Class (III)	Twenty-five percent of the PMF or the critical flood

According to rule, selection of the critical flood as the design flood is acceptable. To determine an acceptable critical (design) flood event, two flood simulations shall be compared. The first includes a base-flow flood that would cause failure of the dam, modeled without any effects from a dam failure. The second simulation would include the same flood event, however the most severe hypothetical dam failure that is possible shall be modeled. The flood simulations are routed through areas downstream of the dam to determine floodwater damages. The design flood and spillway capacity are considered acceptable if the dam failure (second simulation) would case no expected additional loss of life and would not cause significant incremental flood damages downstream of the dam. Additional loss of life is expected if the depth of flow between the two models (non-dam failure and dam failure) is greater than 2 feet, or if the product of the average flood plain flow velocity and the incremental depth is greater than 7.0 ft^2 per second.

DRAFT

The minimum critical flood shall be no less than the following:

Minimum Critical Flood

Class (I)	Forty percent of the PMF
Class (II)	Twenty percent of the PMF
Class (III)	The one-hundred-year flood

With respect to the principal spillway, OAC Rule 1501:21-13-03, Spillway design, general requirements "Every dam shall have a spillway system which will safely operate during the design flood without endangering the safety of the dam." The spillway capacity must be equal to the peak inflow rate of the design flood, unless it has been demonstrated with flood routing procedures that the dam will safely pass the design flood. Every "upground reservoir shall have an overflow or other device to preclude the overfilling the reservoir during normal operations…" The overflow device shall not be more than one-half foot above the designed maximum operating pool level. Additionally, the overflow device must prevent the pool level from rising more than one-half foot above the designed maximum operating pool level.

According to OAC Rule 1501:21-13-07, Freeboard requirements for dams, "Sufficient freeboard shall be provided to prevent overtopping of the dam due to passage of the design flood and other factors including, but not limited to, ice and wave action. The chief may approve a lower freeboard requirement if the dam is armored against overtopping erosion." Additional requirements are:

Freeboard Requirements

Class (I) Upground Reservoir	Five feet higher than elevation of the design maximum operating pool level, unless otherwise approved by the chief.
Class (II) Upground Reservoir	Five feet higher than elevation of the design maximum operating pool level, unless otherwise approved by the chief.
Class (III) Upground Reservoir	Three feet higher than elevation of the design maximum operating pool level, unless otherwise approved by the chief.

Mine Safety and Health Administration

Chapter 8 - Impoundment Design Guidelines of the Mining Safety and Health Administration (MSHA) Coal Mine Impoundment Inspection and Plan Review Handbook (Number PH07-01) published by the U.S. Department of Labor, Mine Safety and Health Administration, Coal Mine Safety and Health, October 2007 provides another source for minimum hydrologic design criteria.

DRAFT

When detailing impoundment design storm criteria, MSHA states that dams need "to be able to safely accommodate the inflow from a storm event that is appropriate for the size of the impoundment and the hazard potential in the event of failure of the dam." Additionally, MSHA notes that sufficient freeboard, adequate factors of safety for embankment stability, and the prevention of significant erosion to discharge facilities, are all design elements that are required for dam structures under their review. Additional impoundment and design storm criteria are as shown in Table 3, MSHA Minimum Long Term Hydrologic Design Criteria.

Table 3. MSHA Minimum Long Term Hydrologic Design Criteria

Hazard Potential	Impoundment Size	
	< 1000 acre-feet < 40 feet deep	**≥ 1000 acre-feet ≥ 40 feet deep**
Low - Impoundments located where failure of the dam would result in no probable loss of human life and low economic and/or environmental losses.	100 - year rainfall*	½ PMF
Significant/Moderate - Impoundments located where failure of the dam would result in no probably loss of human life but can cause economic loss, environmental damage, or disruption of lifeline facilities.	½ PMF	PMF
High - Facilities located where failure of the dam will probably cause loss of human life.	PMF	PMF

After Mining Safety and Health Administration (MSHA) Coal Mine Impoundment Inspection and Plan Review Handbook (Number PH07-01) published by the U.S. Department of Labor, Mine Safety and Health Administration, Coal Mine Safety and Health, October 2007

*Per MSHA, the 24-hour duration shall be used with the 100-year frequency rainfall.

Probable maximum flood (PMF) is, per MSHA, "the maximum runoff condition resulting from the most severe combination of hydrologic and meteorological conditions that are considered reasonably possible for the drainage area." Additionally, MSHA notes the designer should consider several components of the PMF that are site specific. These components include: "antecedent storm; principal storm; subsequent storm; time and spatial distribution of the rainfall and snowmelt; and runoff conditions." Basic agreement, it was noted, exists between dam safety authorities regarding "combinations of conditions and events that comprise the PMF;" however, there are "differences in the individual components that are used." MSHA provided the following as a "reasonable set of conditions for the PMF:

- Antecedent Storm: 100-year frequency, 24 hour duration, with antecedent moisture condition II (AMC), occurring 5 days prior to the principal storm.

- Principal Storm: Probable maximum precipitation (PMP), with AMC III. The principal storm rainfall must be distributed spatially and temporally to produce the most sever conditions with respect to impoundment freeboard and spillway discharge.

DRAFT

- Subsequent Storm: A subsequent storm is considered to be handled by meeting the "storm inflow drawdown criteria," as described subsequently in the document.

With regard to subsequent storms, MSHA Impoundment Design Guidelines noted that:

> *Impoundments must be capable of handling the design storms that occur in close succession. To accomplish this, the discharge facilities must be able to discharge, within 10 days, at least 90 percent of the volume of water stored during the design storm above the allowable normal operating water level. The 10-day drawdown criterion begins at the time the water surface reaches the maximum elevation attainable for the design storm. Alternatively, plans can provide for sufficient reservoir capacity to store the runoff from two design storms, while specifying means to evacuate the storage from both storms in a reasonable period of time – generally taken to be at a discharge rate that removes at least 90% of the second storm inflow volume within 30 days……When storms are stored, the potential for an elevated saturation level to affect the stability of the embankment needs to be taken into account.*

In "Mineral Resources Department of Labor Mine Safety and Health Administration," Title *30 CFR § 77.216-2 Water, sediment, or slurry impoundments and impounding structures; minimum plan requirements; changes or modifications, certification*, information relevant to the duration of the probable maximum precipitation is given. Sub-section *(10)* of *77.216-2* states that a "statement of the runoff attributable to the probable maximum precipitation of 6-hour duration and the calculations used in determining such runoff" shall be provided at minimum in submitted plans for water, sediment or slurry impoundments and impounding structures."

The definition of design freeboard, according to the MSHA Guidelines, is "the vertical distance between the lowest point on the crest of the embankment and the maximum water surface elevation resulting from the design storm." Additionally, the Handbook states that "sufficient documentation should be provided in impoundment plans to verify the adequacy of the freeboard." Recommended items to consider when determining freeboard include "potential wave run-up on the upstream slope, ability of the embankment to resist erosion, and potential for embankment foundation settlement." Lastly, the Handbook states, "without documentation, and absent unusual conditions, a minimum freeboard of 3 feet is generally accepted for impoundments with a fetch of less than 1 mile."

3.2.1 Ash Ponds

The Hutchings Station is classified by ODNR as a Class II; therefore, the owner is required by the state to provide a hydrologic and hydraulic design for the ash pond that meets regulatory criteria of a ½ PMF or critical flood.

Based on their size, the three ash ponds (East Primary Settling Pond, West Primary Settling Pond, and Secondary Settling Pond) qualify for the first, smaller category as defined by MSHA. The Handbook states that a significant hazard potential dam (as assigned by AMEC) that is sized such that it falls within the ranges of the smaller category shall use precipitation from the ½ PMF storm for hydrologic and hydraulic design purposes.

No hydrologic/hydraulic information was provided by DP&L for the three ash ponds.

DRAFT

3.3 Structural Adequacy & Stability

OAC Rule 1501:21-13-08, Additional design requirements for dams, states that, "the safety factors for the various elements of the dam shall conform to good engineering practice as approved by the chief." According to discussions with ODNR personnel, the state will accept minimum slope stability factors of safety for different loading conditions from well regarded sources such as The United States Army Corps of Engineers (USACE) and the United States Mine Safety and Health Administration (MHSA). Minimum recommended factors of safety for different loading conditions can be found in those agency publications. Factors of safety recommended by these sources are shown in Table 4.

Table 4. Minimum Required Dam Safety Factors

Load Case	MSHA Criteria[1]	USACE[2]
Rapid Drawdown	1.3	1.1[3]-1.3[4]
Long- Term Steady State Seepage	1.5	1.5
Earthquake Loading	1.2	---[5]

[1] Coal Mine Impoundment Inspection and Plan Review Handbook, 2007, US Mine Safety and Health Administration
[2] Slope Stability Publication, EM1110-2-1902, 2003, US Army Corps of Engineers, Table 3-1: New Earth and Rock-Fill Dams
[3] Applies to drawdown from maximum surcharge pool
[4] Applies to drawdown from maximum storage pool
[5] Refers to USACE Engineer Circular "Dynamic Analysis of Embankment Dams" document that is still in preparation

To analyze the structural adequacy and stability of the Ash Ponds at Hutchings Station, AMEC reviewed the material provided by DP&L with respect to the load cases shown in Table 4. Factors of safety documented in the provided material were compared with those factors outlined in Table 4 to help determine whether the impoundments meet the requirements for acceptable stability.

3.3.1 Hutchings Ash Pond Structural Adequacy & Stability

1976 Slope Stability Analysis

A report entitled *Soil Investigation in Area of Ash Ponds and Treatment Facilities, O.H. Hutchings Station, Chautauqua, Ohio* prepared by Bowser-Morner Testing Laboratories, Inc. dated May 17, 1976 discusses a slope stability analyses performed. The geotechnical exploration program was conducted in February 1976 and included a total of 8 borings varying in depth from 33 feet to 51 feet below ground surface. Boring locations are illustrated on Figure 8. Nine in-place permeability tests were conducted during the drilling exploration. Based on the average results, the average coefficient of permeability in the fill and original sand and gravel is equal to 7×10^{-3} centimeters per second and 1.4×10^{-2} centimeters per second, respectively. The report states that an on-site inspection was performed to determine the seepage conditions and location and extent of the existing slides. Cross sections of the dike were taken at four different locations. Figure 8 illustrates the location of the slides, and extent of the seepage.

The soil parameters were determined by a geotechnical laboratory testing program which consisted of classification tests including Atterberg Limits, grain-size analyses, moisture contents, and unit weight determinations. A total of three consolidated-undrained triaxial shear tests with pore pressure measurements were completed. Of the three tests, one was performed on fill material, and the remaining two tests were performed on the underlying original sand and gravel and black ash.

DRAFT

Soil parameters determined from the laboratory testing are shown in Table 5.

Table 5. Laboratory Test Results

Test No.	Type of Material	Effective Strength Parameters	
		Friction Angle Φ' (degrees)	Cohesion C' (psi)
1	Original Brown or Gray Sand and Gravel, trace amounts of silt	34.6	0
2	Fill of Brown Sand with varying amounts of Silt and Gravel	38	0
3	Black Ash	37	0

Slope stability analyses were "performed on the cross section of the existing dike provided by the client." The analyses were conducted by a computer program utilizing a Modified Bishop method of slices. The factors of safety for the different failure circles were determined. All failures were assumed in the long term condition and are based on the results of the triaxial tests. Assumed strength parameters were used for the underlying original black organic silty and the original toe materials. The location of the phreatic surface was determined from the depths of water encountered during drilling operations, and on the seepage conditions determined from the on-site inspection. Earthquake forces were included, with a coefficient of earthquake design of 0.05, which is indicative Zone 1 earthquake zone for the United States.

The soil parameters in Table 6 were utilized in the slope stability analyses:

Table 6. Soil Parameters

Material	Unit Weight (pcf)	Long Term (Effective Stress) Parameters	
		Cohesion, C' (psf)	Friction Angle Φ' (degrees)
Dike Material	134	0	38
Ash Material	80	0	37
Original Underlying Sand and Gravel	140	0	34.6
Original Toe Material	125	260	33

The following table lists the various assumed modes of failure and the factors of safety for each particular mode:

Table 7. Factors of Safety

Circle Number	Location of Slide Plane	Factor of Safety	
		Static	Earthquake
1	Mini Slide on Saturated Portion of Slope	0.94	0.80
2	Interface between Embankment Material and Ash	1.27	1.10
3	Interface between Ash and Black Organic Silt	1.34	1.17
4	Interface between Black Organic Silt and Original Sand and Gravel	1.09	0.94

DRAFT

In regard to the calculated factors of safety, the report states

> *Reference to the factors of safety so determined reveals that failure along the saturated portion of the slope should occur with the factor of safety being approximately 1.0. This is in substantial agreement with the existence of several slides detected during the on-site inspection. It should be noted that in determining the soil profile for the given cross section geometry submitted, the worst soil assumptions were determined consistent with the results of the soil borings.*

3.4 Foundation Conditions

Bowser-Morner completed eight borings in February of 1976 in support of the slope stability analyses described in Section 3.3.1. Four borings were performed along the east dike of the Secondary Settling Pond and the East Primary Settling Basin. Two borings were performed along the dividing dike between the east and west settling pond. One boring was completed on the west dike of the west settling pond, and the final boring was completed near the power plant. The boring logs indicate natural soils underlying 6.5 feet to 34.5 feet of fill. The insitu soil primarily consisted of a combination of sand and gravel and organic silt; clay is noted throughout the borings. As expected, the boring logs indicate thicker layers of the fill strata in the diked areas of the ponds (along the east dike of the settling pond and east settling basin and along the dividing dike between the east and west pond).

3.5 Operations and Maintenance

DP&L states that on-site personnel perform safety and surveillance inspections for the ash pond at the Hutchings Station quarterly and undocumented inspections are completed daily. However, no record of inspection dates or observations were provided to AMEC. Furthermore, no information was provided to indicate the general procedure or extent of the inspection area(s). Due to heavy vegetation obstructing the condition of the slopes (interior and exterior) and toe of the embankments, AMEC cannot render an opinion regarding major operational or maintenance issues that might need to be addressed.

3.5.1 Instrumentation

During AMEC's site visit, one monitoring well was noted along the east crest of the East Primary Settling Pond. Site personnel indicated other monitoring wells were recently discovered, however are not monitored.

3.5.2 Inspections

State Inspections

An inspection was completed by ODNR on November 17, 2009 of the three ash ponds at Hutchings Station. See Section 1.2, above. The next state inspection is planned from 2010 to 2011.

Review of the inspection indicates the following items were to be addressed:

1. Remove trees and brush from the interior and exterior slopes of the entire embankment within a year of this report;

DRAFT

2. Low-areas were noted on the crest near the pump house and along the east side of the east pond. The low-areas must be raised to the current crest elevation;
3. A number of rodent burrows were noted along the exterior slope. Immediately flowing the removal of trees and brush on the exterior slope, located and remove all rodents, then fill and seal the rodent holes accordingly;
4. Provide information regarding the design maximum operating levels of both cells of the ash ponds and the secondary pond. If less than 5 feet of freeboard is proposed, then a variance must be requested or the design operating levels must be adjusted;
5. An appropriate staff gauge must be installed in both cells of the ash pond and in the secondary pond. In addition, signage showing the design maximum operating levels must be provided;
6. Prepare an operating, maintenance, and inspection manual (OMI) and an emergency action plan (EAP). Guidelines for the preparation of these documents are included with this report. The OMI must address how the pool levels in each part of the structure would be lowered in the event of an emergency or potential emergency.

In regard to item 6 above, the Dam Safety Inspection Checklist for Upground Reservoirs, provided within the 2009 ODNR inspection, states that DP&L is „working with consultant' in terms of creating an EAP and OMI. No documentation was provided by DP&L to verify this.

According to state rules, for a Class II dam, at least five feet of freeboard is required between the top of dam elevation (708.00), and the maximum designed operating pool level (705.00). At the time of ODNR's inspection, a freeboard of 3.0 feet was noted, which is in violation of the states five-foot requirement. However, correspondence with state personnel indicates that ODNR regularly grants variance for freeboard down to three feet, which has been done in the case of Hutchings Station. The owner must request this variance, and it needs to be done in conjunction with overfilling prevention (free overflows or inflow shutoffs for pumps).

<u>2009 Inspection</u>
Civil & Environmental Consultants (CEC) performed an inspection of the three Hutchings Station ash ponds on February 12, 2009. DP&L provided the April 30, 2009 CEC report entitled *Coal Ash Impoundment Inspection Report DP&L O.H. Hutchings Station 9200 Chautauqua Road, Miamisburg, Ohio 45342*. The report included an executive summary, drawing figures, photograph records, site inspection checklists, and ODNR Dam Safety Fact Sheets. CEC determined the ponds appeared to be in average condition (options included poor, average, good, and excellent). No definition of „average' was provided. The inspection focused on the interior slope, crest exterior slope, and inlet and outlet structures associated with each impoundment.

The following action items are detailed in CEC's report:

The following three items were to be addressed as soon as practicable:

- The east face of the exterior slope of the east settling pond has an area of washout and erosion that appears to have been created during a temporary pond dewatering effort by means of a discharge hose placed over the crest of the pond.
- It appears that brush and numerous trees were removed from the top of the eastern exterior slope of the east pond and secondary settling pond leaving large depressions in the slope. The remaining portion of the exterior slope is very heavily vegetated. We recommend clearing the remaining trees and brush along all exterior slopes of all ponds backfilling and regrading depressions as necessary, followed by a compete reseeding of any disturbed or bare areas on these slopes.

- Repair rodent burrows in various locations along the north and east exterior slopes of the east ash pond.

Inlet/Outlet Structures

- The trash rack on the 24-inch riser pipe in the east pond needs to be cleaned and cleared of debris and reset to be level.
- Erosion is evident around the concrete headwall at the west pond primary spillway as well as at the 12-inch crossover pipe in both the east and west ponds. We recommend regarding and replacing ash with suitable embankment soil, compacting, and reseeding the entire area.

Interior Slopes

- The interior slopes on all three ponds show signs of being over-excavated during ash excavation operations. The slopes have been exposed to wave erosion and are intermittently sloughing in areas where they have become too steep. In addition, the soil composing the interior slopes over time appears to have been heavily mixed with bottom ash possible creating less stable embankments. During the next regularly scheduled dewatering and ash excavations cycle, we recommend the interior slopes be regarded, bottom ash material removed and replaced with more suitable embankment materials, and the slopes recompacted, and reseeded.
- The northern interior surface of west ash pond has a runoff erosion gully. We recommend filling and compacting the erosion gullies.
- There is a small crack along the east interior slope of the east ash pond. We recommend filling and compacting the crack to stop runoff water from entering.

Crest

- The crest of the ponds, specifically the center dike separating the east and west ponds has multiple sink holes evident, as well as some vehicle rutting. Backfilling and compacting all sink holes and ruts is recommended.
- There are mutilipele areas where the ash excavation efforts in the ponds have resulted in over-excavation of the interior slopes (see above), creating a diminished width of the crest. Our recommended remedy for this problem is the same as the recommendations for the interior slope remedial measures.

Exterior Slopes

- There is an approximate 300 linear foot area of seepage with visible small clear water flows on the south exterior face of the west ash pond. The seepage appears to have been present long enough for aquatic vegetation to establish on the bottom one-third of the exterior face. At the toe of the embankment is a stream that is bright green in appearance at this location and is clear just upstream of this location. We recommend monitoring of this area until further investigation and repair recommendations are prepared in Phase II of the report.
- This is an approximate 150 linear foot area of seepage with standing water saturation but no visible flows on the south exterior face of the east ash pond. We recommend monitoring of this area until further investigation and repair recommendations are prepared in Phase II of the project.
- The western portion of the south exterior face of the west ash pond is completely cleared, leaving bare soil with no permanent vegetation. We recommend this portion of the embankment be reseeded to establish healthy vegetative growth.

DRAFT

DP&L Response to Inspection Issues

In response to ODNR's and CEC's 2009 inspection recommendations concerning the removal of trees and brush, DP&L contracted with Greentech Corporation in order to "clear all trees, shrubs, and bushes around Hutchings Station Ash ponds per ODNR requirements. Contractor to remove trees and large brush by cutting below ground level and covering stump with top soil to be seeded." DP&L provided a signed purchase order dated August 11, 2009 with Greentech Corporation. Conversation with Hutchings Station site personnel, indicated clearing began September 13, 2010.

DP&L contracted with Critter Control of Dayton to address the rodent burrow issues identified by CEC and ODNR. The provided purchase order states "price includes all labor, materials, equipment, supplies, removal of animals, set up and return visits daily Monday thru Friday" with a planned duration from September 10, 2010 to November 10, 2010. Correspondence with DP&L confirmed Critter Control's presence on site.

DRAFT

4.0 COMMENTS AND RECOMMENDATIONS

Condition assessment definitions, as accepted by the National Dam Safety Review Board, are as follows:

SATISFACTORY

No existing or potential dam safety deficiencies are recognized. Acceptable performance is expected under all loading conditions (static, hydrologic, seismic) in accordance with the applicable regulatory criteria or tolerable risk guidelines.

FAIR

No existing dam safety deficiencies are recognized for normal loading conditions. Rare or extreme hydrologic and/or seismic events may result in a dam safety deficiency. Risk may be in the range to take further action.

POOR

A dam safety deficiency is recognized for loading conditions which may realistically occur. Remedial action is necessary. POOR may also be used when uncertainties exist as to critical analysis parameters which identify a potential dam safety deficiency. Further investigations and studies are necessary.

UNSATISFACTORY

A dam safety deficiency is recognized that requires immediate or emergency remedial action for problem resolution.

NOT RATED

The dam has not been inspected, is not under state jurisdiction, or has been inspected but, for whatever reason, has not been rated.

4.1 Acknowledgement of Management Unit Conditions

I certify that the management units referenced herein (East Primary Settling Pond, West Primary Settling Pond, and Secondary Settling Pond) were personally assessed by me and were found to be in the following condition: **Poor**

The East Primary Settling Pond, West Primary Settling Pond, and Secondary Settling Pond are rated poor due to lack of critical analyses which would verify the units would be stable under required loading conditions.

4.2.1 Hydrologic and Hydraulic Recommendations

AMEC recommends that an appropriate design storm rainfall and freeboard depth in accordance with MSHA guidelines be applied to the impoundment,s watershed to assess whether the dams and decant systems can safely store, control, and discharge the design flow. Based on the size and rating for the three ash ponds, the MSHA design storm would be the ½

DRAFT

PMF. Hydraulic calculations should also be completed to determine the rate at which the discharge structure and associated piping could pass the design storm, if necessary, or draw down elevated water surfaces following such an event. The analysis should consider all critical stages over the life of the pond including full pond conditions.

4.2.2 Geotechnical and Stability Recommendations

AMEC recommends that a stability analyses be completed for the East Primary Settling Pond, West Primary Settling Pond, and Secondary Settling Pond that includes the maximum design water levels and appropriate steady-state phreatic surfaces. Likewise, the stability analyses should consider all critical stages during the life of the facility, such as maximum pool area and any potential surcharges, as well as likely loading combinations. AMEC recommends that the slope stability analyses include slip surface optimization to allow for noncircular failure surfaces.

4.2.3 Monitoring and Instrumentation Recommendations

AMEC recommends additional instrumentation to monitor slope stability and landslide conditions. In order to monitor these parameters, DP&L should install combination slope inclinometers and additional piezometers in the river side dike of each ash pond. These instruments may be installed within the same borehole. Routine monitoring should be established with corresponding elevations within the ash ponds at the time of the measurement in order to establish an understanding of the embankment behavior.

In order to monitor change of water surface, a gauge should be added to the East and West Primary Settling Pond and the Secondary Settling Basin. Routine monitoring should be established and read in conjunction with slope inclinometer and piezometer readings.

4.2.4 Inspection Recommendations

DP&L plant personnel currently perform quarterly and daily inspections of the ash ponds that are not documented. Although daily inspection by DP&L is commendable, a more detailed and documented record would be appropriate. AMEC recommends that the current inspection program by the plant be expanded to include at least monthly documented inspections which identify potential problems, areas inspected, instrumentation monitoring (when installed) and pond and river levels. Inspections of the ponds should be performed after significant rainfall events.

AMEC understands a Professional Engineer performed an inspection in 2009. We recommend this type of inspection program and report by a Professional Engineer be continued at least annually, in addition to the recommended monthly inspections by facility personnel.

DRAFT

5.0 CLOSING

This report is prepared for the exclusive use of the Environmental Protection Agency for the site and criteria stipulated herein. This report does not address regulatory issues associated with storm water runoff, the identification and modification of regulated wetlands, or ground water recharge areas. Further, this report does not include review or analysis of environmental or regional geo-hydrologic aspects of the site, except as noted herein. Questions or interpretation regarding any portion of the report should be addressed directly by the geotechnical engineer.

Any use, reliance on, or decisions to be made based on this report by a third party are the responsibility of such third parties. AMEC accepts no responsibility for damages, if any, suffered by any third party as a result of decisions made or actions based on this report.

The conclusions and recommendations given in this report are based on visual observations, our partial knowledge of the history of Hutchings Station impoundments, and information provided to us by others. This report has been prepared in accordance with normally accepted geotechnical engineering practices. No other warranty is expressed or implied.

DRAFT

FIGURES

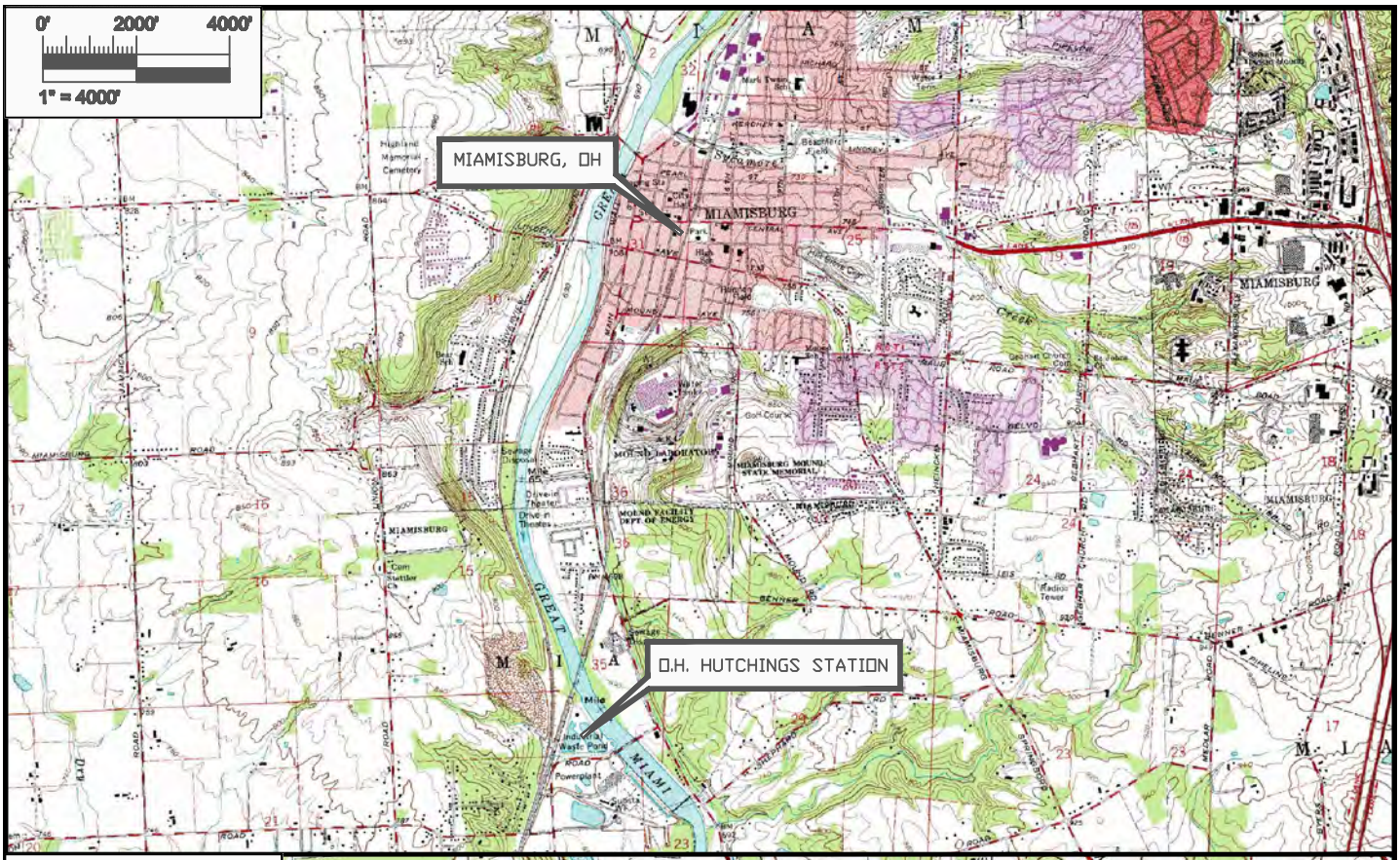

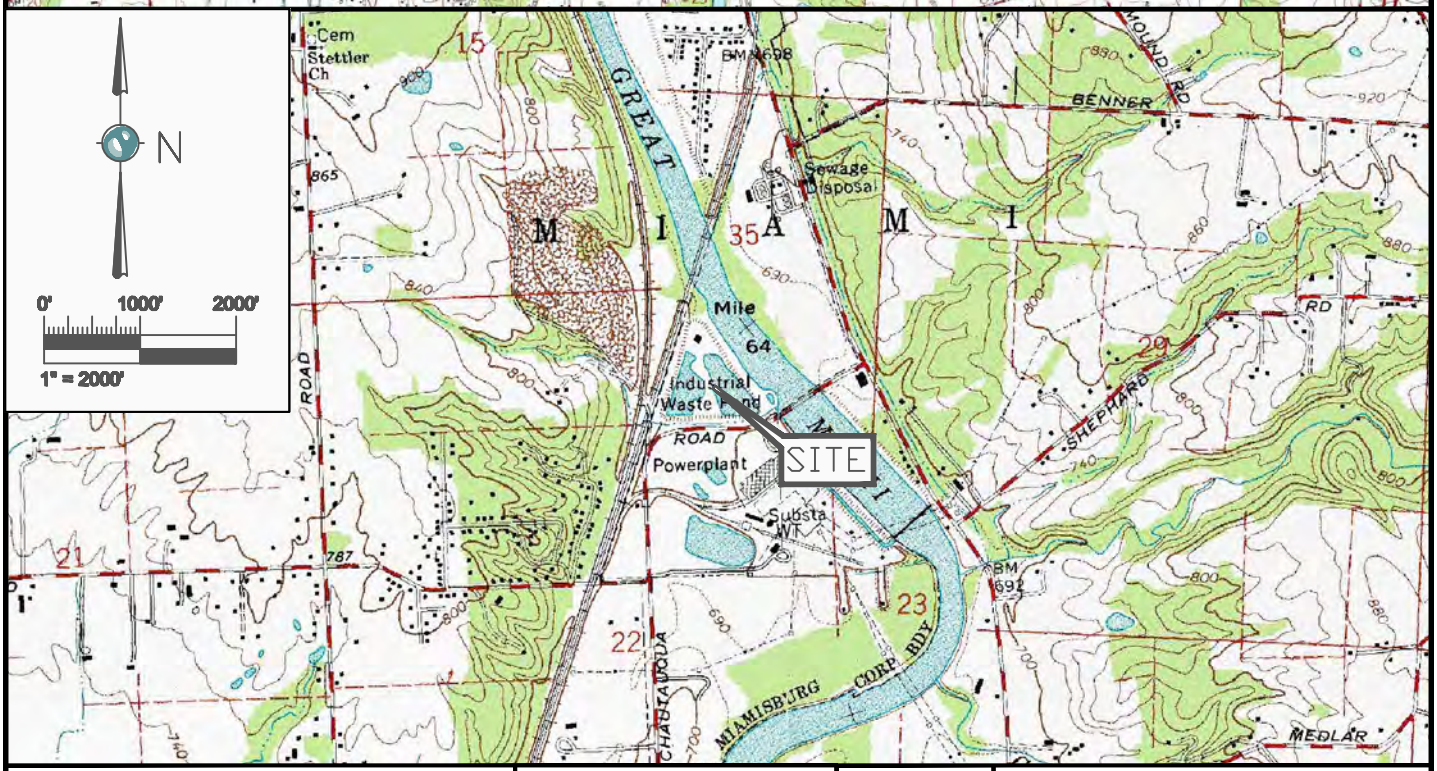

AMEC Earth & Environmental

600 Commonwealth Center
11003 Bluegrass Parkway
Louisville, Ky 40299
(502) 267-0700

amec

CLIENT LOGO

CLIENT: UNITED STATES ENVIRONMENTAL PROTECTION AGENCY

PROJECT: ASSESSMENT OF DAM SAFETY OF COAL COMBUSTION SURFACE IMPOUNDMENTS	DWN BY: CAE	DATUM:	DATE: 9/17/10
TITLE: DAYTON POWER AND LIGHT COMPANY O.H. HUTCHINGS STATION, MIAMISBURG, OH SITE LOCATION & VICINITY MAP	CHK'D BY: MSC	REV. NO.:	PROJECT NO: 3-2106-0177-0006
	PROJECTION:	SCALE: AS SHOWN	FIGURE No. 1

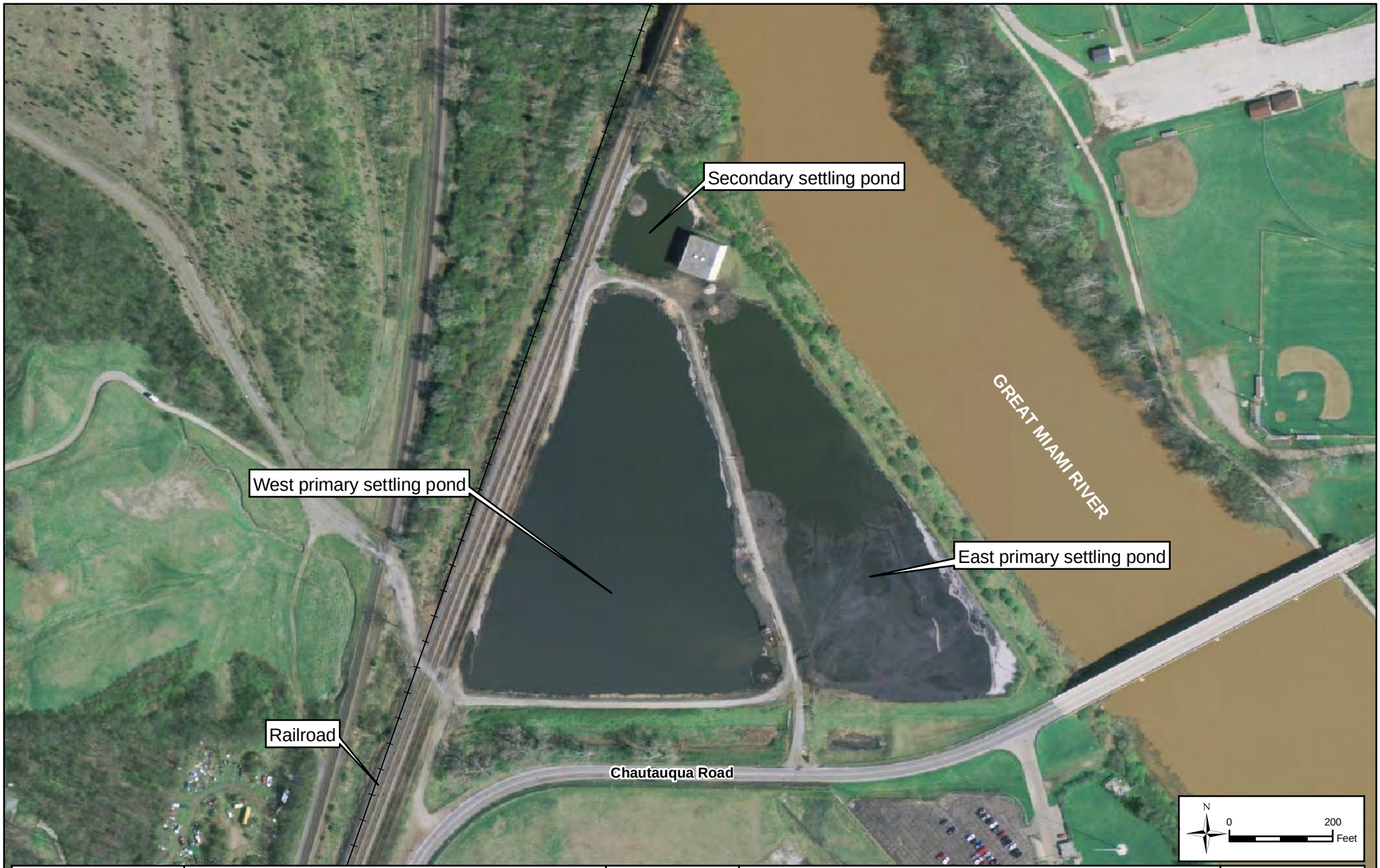

UNITED STATES ENVIRONMENTAL PROTECTION AGENCY	DWN BY: DJC CKD BY: MS	ASSESSMENT OF DAM SAFETY OF COAL COMBUSTION SURFACE IMPOUNDMENTS	REV. No.: A Date: 9-15-10	
AMEC Earth & Environmental 690 Commonwealth Business Center 11003 Bluegrass Parkway Louisville, KY 40299	Datum: NAD 83 Projection: Ohio SPC S Scale: As Shown	DAYTON POWER AND LIGHT COMPANY O.H. HUTCHINGS ELECTRIC GENERATING STATION SITE MAP	Project No: 3-2106-0177-0006 Figure No: 2	

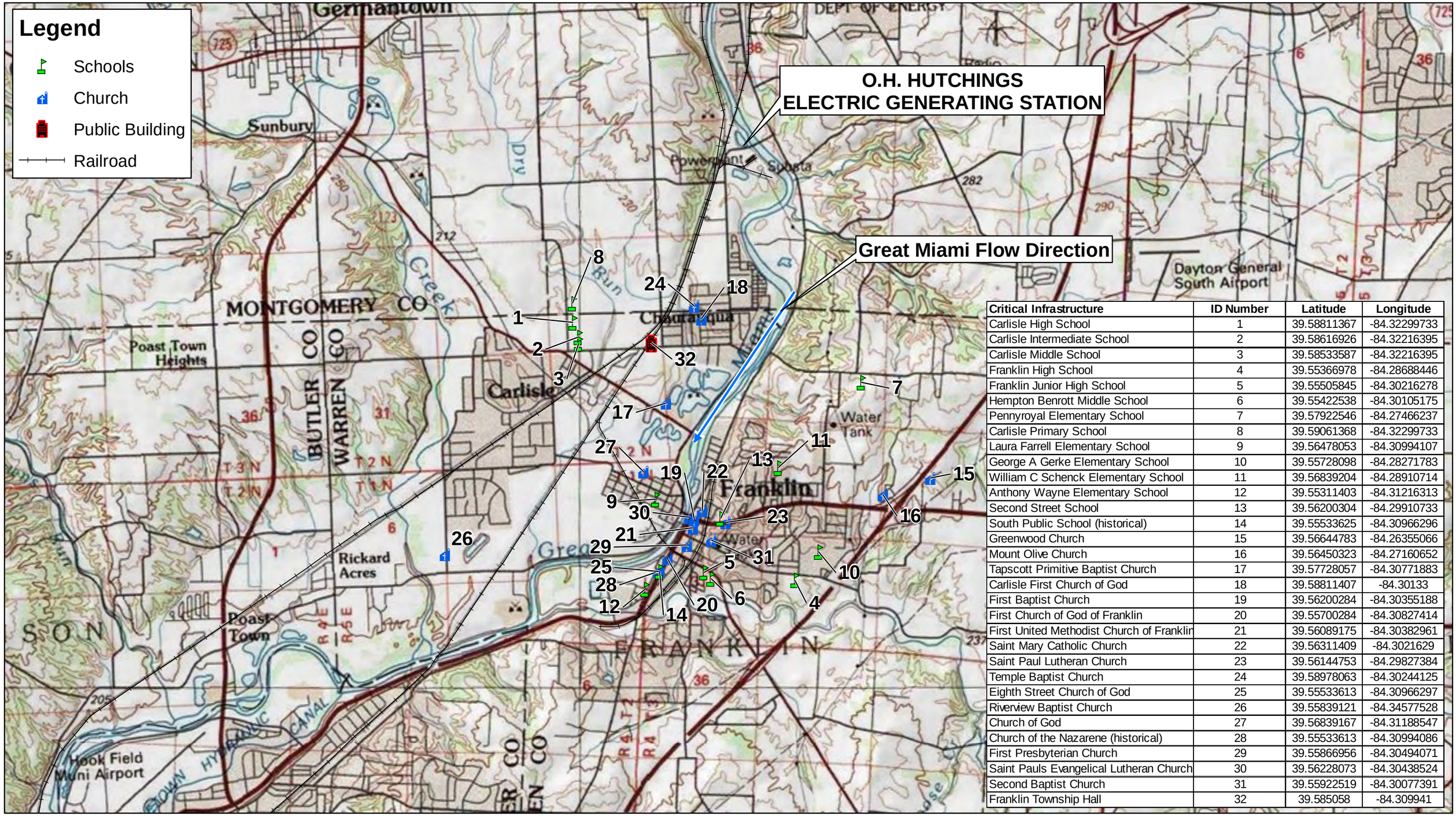

Critical Infrastructure	ID Number	Latitude	Longitude
Carlisle High School	1	39.58811367	-84.32299733
Carlisle Intermediate School	2	39.58616926	-84.32216395
Carlisle Middle School	3	39.58533587	-84.32216395
Franklin High School	4	39.55366978	-84.28688446
Franklin Junior High School	5	39.55505845	-84.30216278
Hempton Benrott Middle School	6	39.55422538	-84.30105175
Pennyroyal Elementary School	7	39.57922546	-84.27466237
Carlisle Primary School	8	39.59061368	-84.32299733
Laura Farrell Elementary School	9	39.56478053	-84.30994107
George A Gerke Elementary School	10	39.55728098	-84.28271783
William C Schenck Elementary School	11	39.56839204	-84.28910714
Anthony Wayne Elementary School	12	39.55311403	-84.31216313
Second Street School	13	39.56200304	-84.29910733
South Public School (historical)	14	39.55533625	-84.30966296
Greenwood Church	15	39.56644783	-84.26355066
Mount Olive Church	16	39.56450323	-84.27160652
Tapscott Primitive Baptist Church	17	39.57728057	-84.30771883
Carlisle First Church of God	18	39.58811407	-84.30133
First Baptist Church	19	39.56200284	-84.30355188
First Church of God of Franklin	20	39.55700284	-84.30827414
First United Methodist Church of Franklin	21	39.56089175	-84.30382961
Saint Mary Catholic Church	22	39.56311409	-84.3021629
Saint Paul Lutheran Church	23	39.56144753	-84.29827384
Temple Baptist Church	24	39.58978063	-84.30244125
Eighth Street Church of God	25	39.55533613	-84.30966297
Riverview Baptist Church	26	39.55839121	-84.34577528
Church of God	27	39.56839167	-84.31188547
Church of the Nazarene (historical)	28	39.55533613	-84.30994086
First Presbyterian Church	29	39.55866956	-84.30494071
Saint Pauls Evangelical Lutheran Church	30	39.56228073	-84.30438524
Second Baptist Church	31	39.55922519	-84.30077391
Franklin Township Hall	32	39.585058	-84.309941

AMEC Earth & Environmental
690 Commonwealth Business Center
11003 Bluegrass Parkway
Louisville, KY 40299

UNITED STATES
ENVIRONMENTAL PROTECTION AGENCY

DRAWN BY: DJC
CHK'D BY: MS
DATUM: NAD83
PROJECTION: Albers
SCALE: AS SHOWN
DATE: 8/19/2010

ASSESSMENT OF DAM SAFETY OF
COAL COMBUSTION SURFACE IMPOUNDMENTS

DAYTON POWER AND LIGHT COMPANY
O.H. HUTCHINGS ELECTRIC GENERATING STATION
CRITICAL INFRASTRUCTURE

N
0 1 Miles
0 1 Kilometers

Notes: Critical infrastructure data provided by ESRI

FIGURE 3

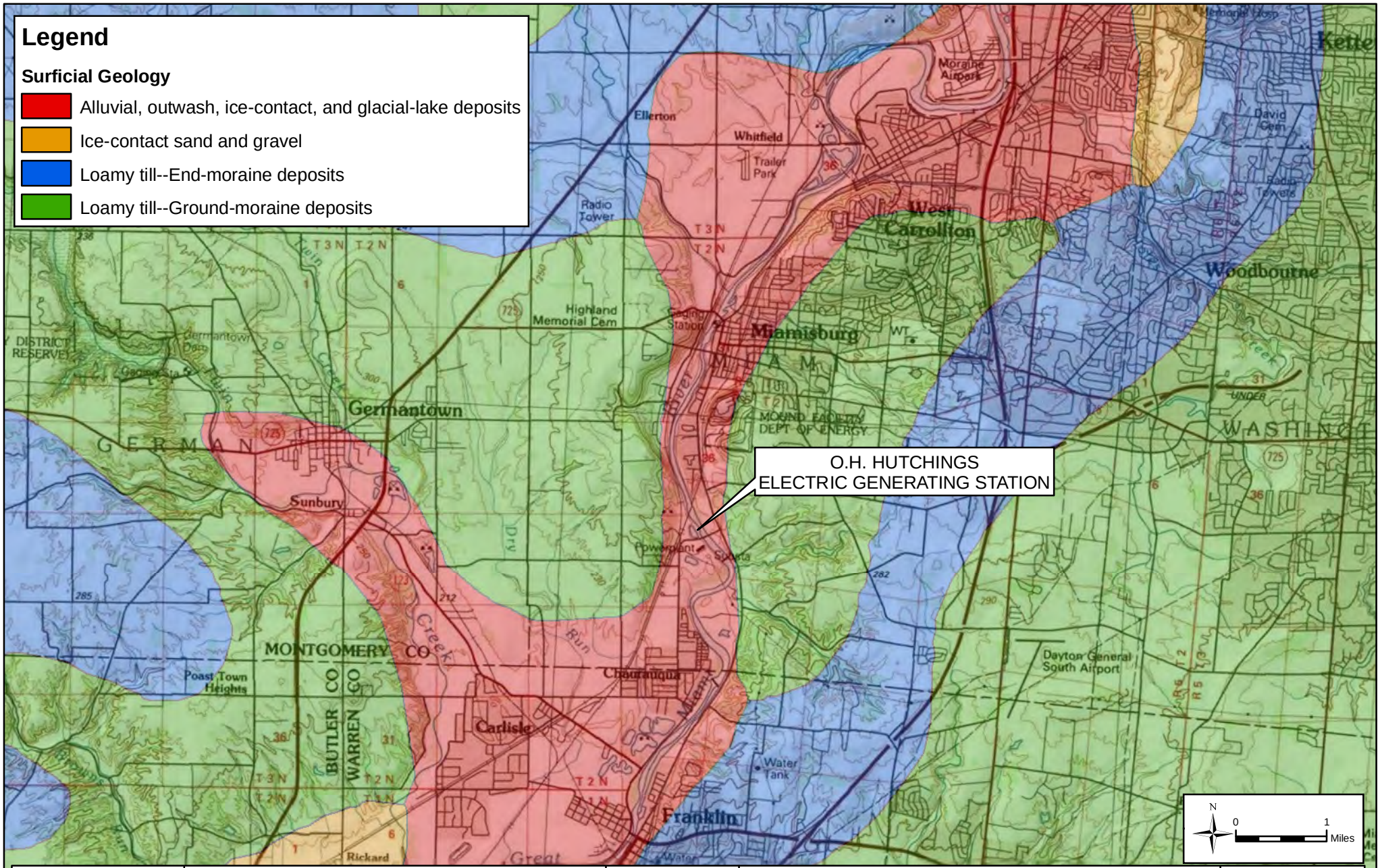

UNITED STATES ENVIRONMENTAL PROTECTION AGENCY	DWN BY: DJC	ASSESSMENT OF DAM SAFETY OF COAL COMBUSTION SURFACE IMPOUNDMENTS	REV. No.: A
	CKD BY: MS		Date: 9-15-10
AMEC Earth & Environmental 690 Commonwealth Business Center 11003 Bluegrass Parkway Louisville, KY 40299	Datum: NAD 83	DAYTON POWER AND LIGHT COMPANY O.H. HUTCHINGS ELECTRIC GENERATING STATION SURFICIAL GEOLOGIC MAP	Project No: 3-2106-0177-0006
	Projection: Ohio SPC S		Figure No: 4
	Scale: As Shown		

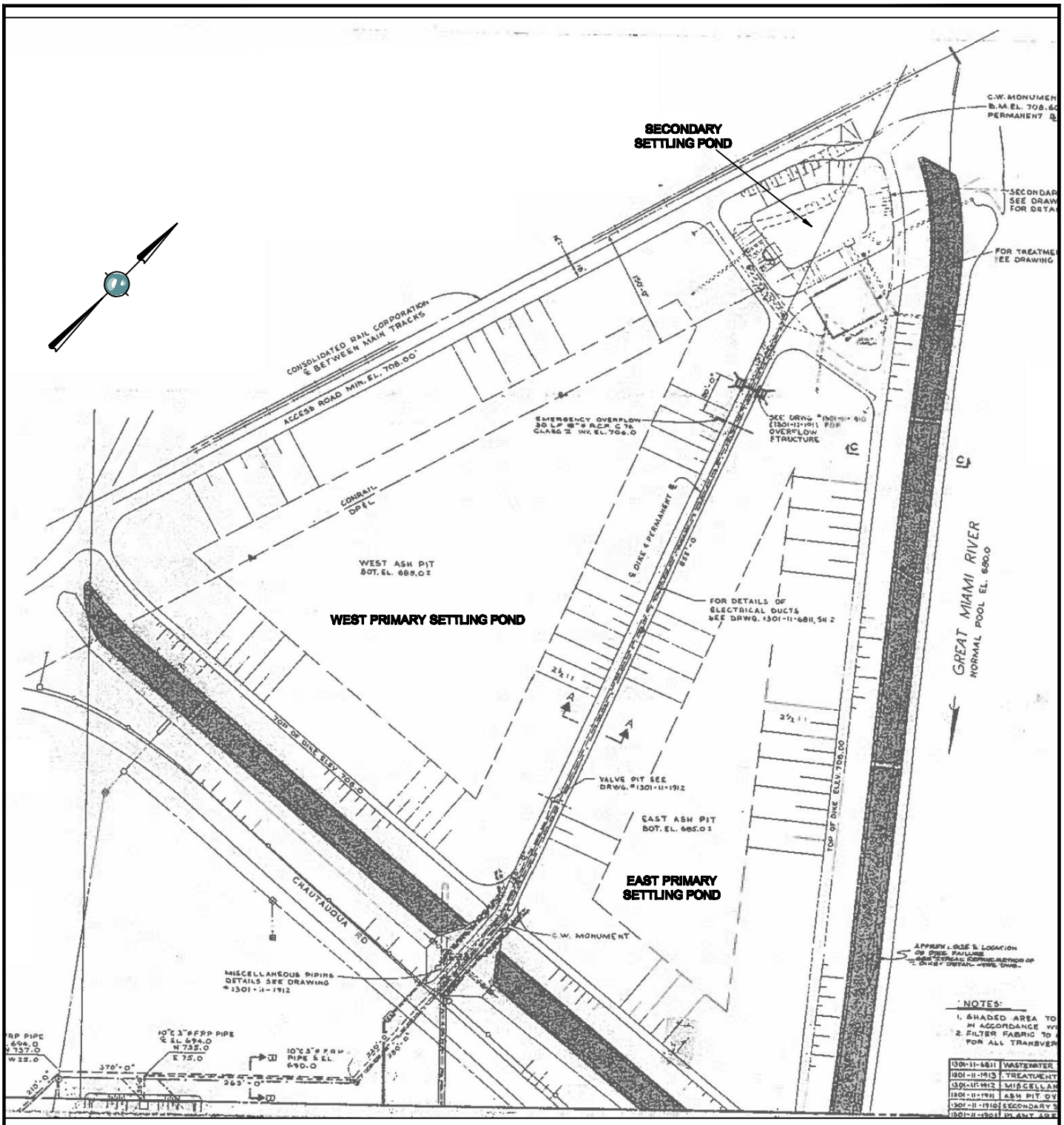

SOURCE: ASH PIT AREA-SITE PLAN, DRAWING 1301-11-1902, PREPARED BY DAYTON POWER AND LIGHT COMPANY, DATED AUGUST 1977.

AMEC Earth & Environmental 690 Commonwealth Center 11003 Bluegrass Parkway Louisville, Ky 40299 (502) 267-0700	amec	CLIENT LOGO	CLIENT UNITED STATES ENVIRONMENTAL PROTECTION AGENCY	
PROJECT ASSESSMENT OF DAM SAFETY OF COAL COMBUSTION SURFACE IMPOUNDMENTS		DWN BY: CAE	DATUM:	DATE: 9/16/10
TITLE DAYTON POWER AND LIGHT COMPANY O.H. HUTCHINGS STATION, MIAMISBURG, OH PLAN VIEW OF ASH PONDS		CHK'D BY: MSC	REV. NO.:	PROJECT NO: 3-2106-0177-0006
		PROJECTION:	SCALE: AS SHOWN	FIGURE No. 5

SOURCE: SECONDARY SETTLING POND SITE PLAN, DRAWING 1301-11-1910, PREPARED BY DAYTON POWER AND LIGHT COMPANY, DATED AUGUST 1977

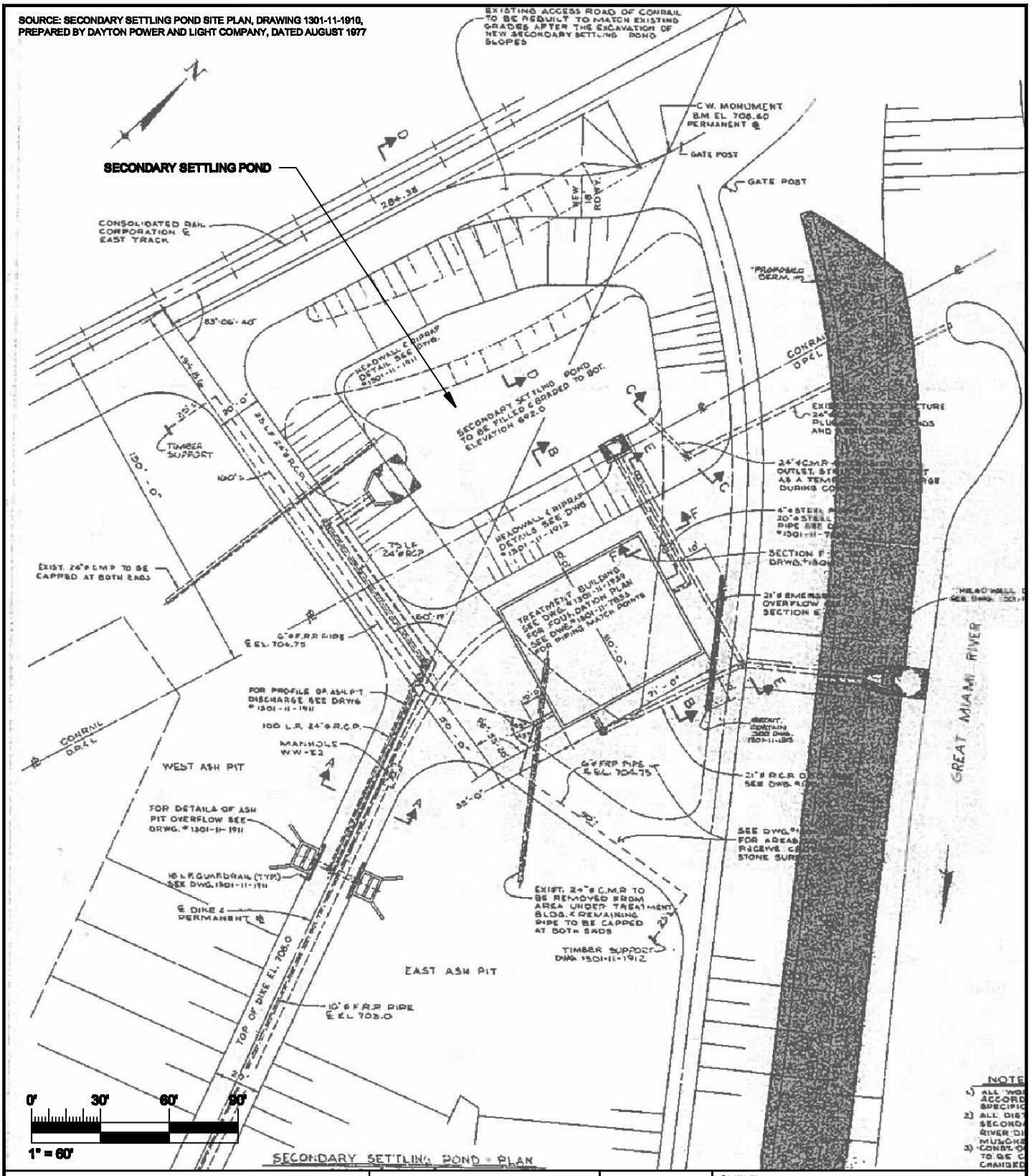

AMEC Earth & Environmental 690 Commonwealth Center 11003 Bluegrass Parkway Louisville, Ky 40299 (502) 267-0700	amec	CLIENT LOGO	CLIENT UNITED STATES ENVIRONMENTAL PROTECTION AGENCY	
PROJECT ASSESSMENT OF DAM SAFETY OF COAL COMBUSTION SURFACE IMPOUNDMENTS		DWN BY: CAE	DATUM:	DATE: 9/16/10
TITLE DAYTON POWER AND LIGHT COMPANY O.H. HUTCHINGS STATION, MIAMISBURG, OH PLAN VIEW OF SECONDARY SETTLING POND		CHK'D BY: MSC	REV. NO.:	PROJECT NO: 3-2106-0177-0006
		PROJECTION:	SCALE: AS SHOWN	FIGURE No. 6

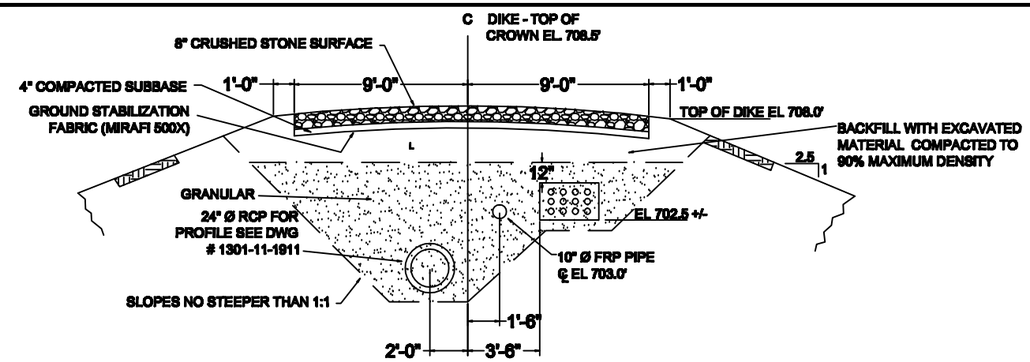

SECTION A-A EAST AND WEST PRIMARY SETTLING POND TYPICAL COMMON DIKE CROSS SECTION

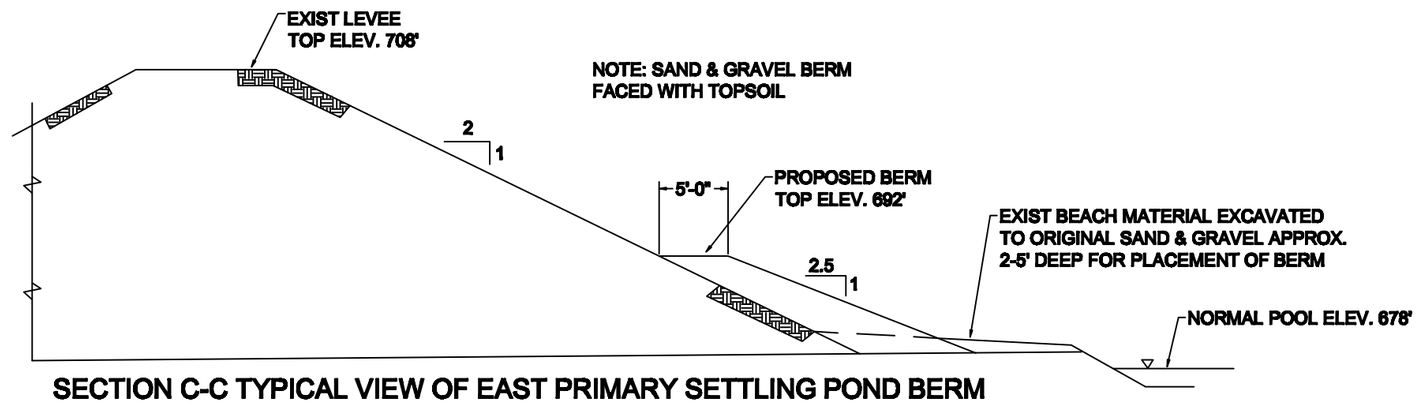

SECTION C-C TYPICAL VIEW OF EAST PRIMARY SETTLING POND BERM AT RIVER BERM, SIMILAR ALONG DITCH AT ROAD

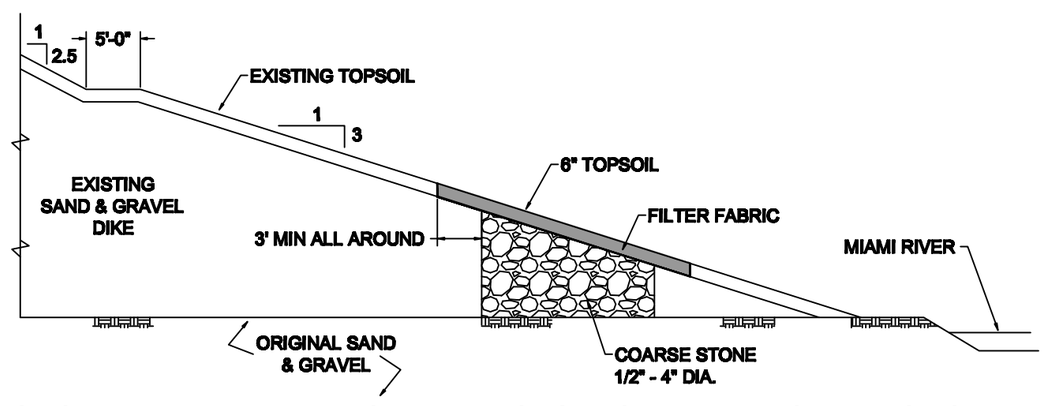

SECTION D-D - REPAIR AREA OF DIKE ALONG EAST PRIMARY SETTLING POND

SOURCE (A-A): SECONDARY SETTLING POND SITE PLAN, DRAWING 1301-11-1910, PREPARED BY DAYTON POWER AND LIGHT COMPANY, DATED AUGUST 1977

SOURCE (C-C & D-D): ASH PIT AREA-SITE PLAN, PREPARED BY DAYTON POWER AND LIGHT COMPANY, DATED AUGUST 1977

NOTE: THIS DRAWING SHOULD BE READ IN CONJUNCTION WITH THE AMEC EARTH & ENVIRONMENTAL REPORT

CLIENT LOGO

CLIENT: UNITED STATES ENVIRONMENTAL PROTECTION AGENCY

AMEC Earth & Environmental
690 Commonwealth Center
11003 Bluegrass Parkway
Louisville, Ky 40299
(502) 267-0700

DWN BY:	CAE
CHK'D BY:	MGS
DATUM:	
PROJECTION:	
SCALE:	AS SHOWN

PROJECT: ASSESSMENT OF DAM SAFETY OF COAL COMBUSTION SURFACE IMPOUNDMENTS

TITLE: DAYTON POWER AND LIGHT COMPANY O.H. HUTCHINGS STATION, MIAMISBURG, OH EAST AND WEST PRIMARY SETTLING POND CROSS SECTIONS

DATE:	9/15/10
PROJECT NO:	3-2106-0177-0006
REV. NO.:	
FIGURE No.	7

S:\Geosciences\Proposals\EPA Coal Impoundment Inspection\EPA CCW June Round 6\Dayton Power– Hutchings\CAD GIS Files\hutchingsfig7.dwg – Layout1 – Sep. 16, 2010 9:58am – chris.eger

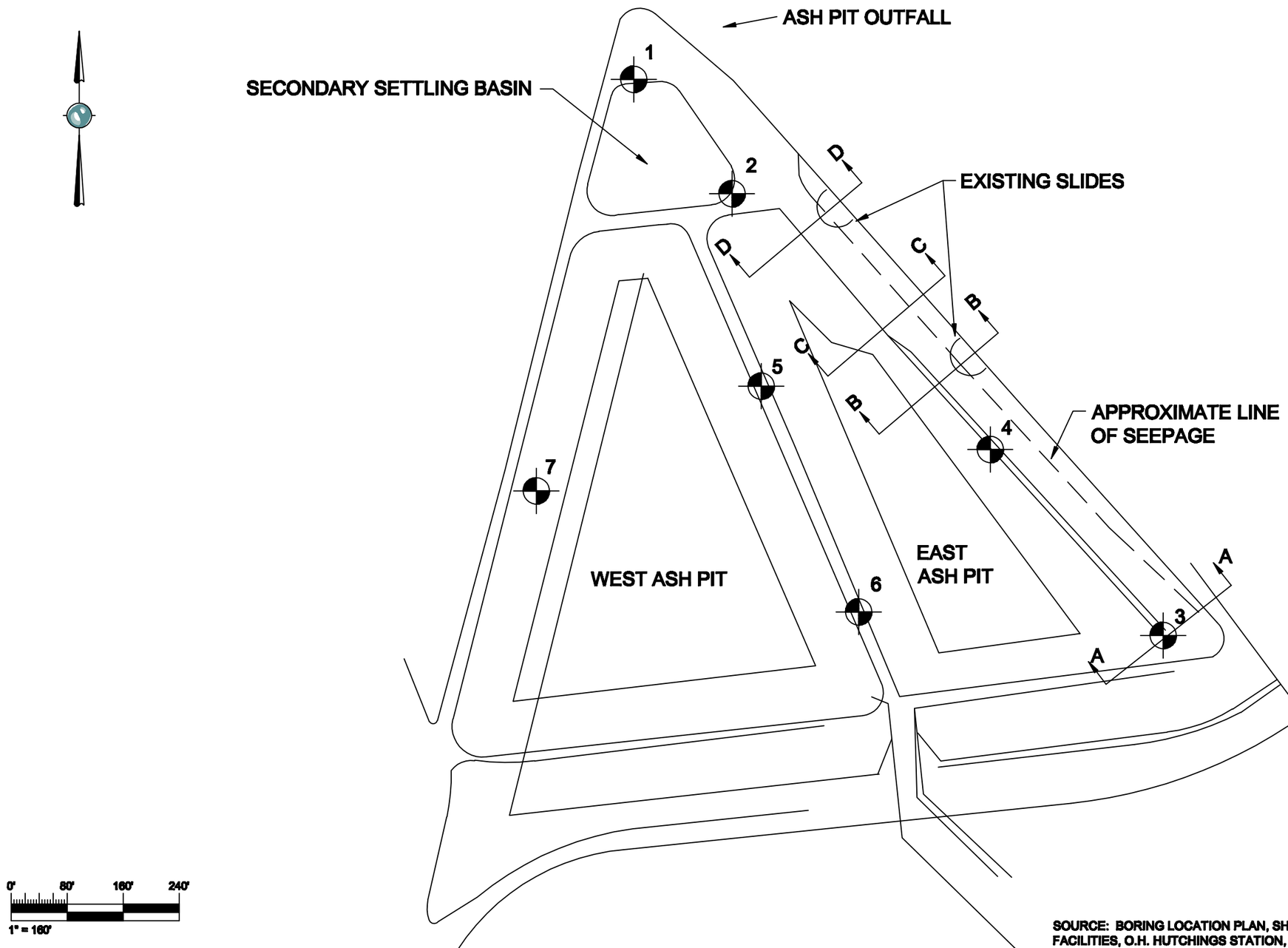

SOURCE: BORING LOCATION PLAN, SHEET 1 OF 2, SOIL INVESTIGATION IN AREA OF ASH PONDS AND TREATMENT FACILITIES, O.H. HUTCHINGS STATION, CHAUTAUQUA, OHIO, PREPARED BY BOWSER MORNER, DATED MAY 17, 1976

NOTE: THIS DRAWING SHOULD BE READ IN CONJUNCTION WITH THE AMEC EARTH & ENVIRONMENTAL REPORT

CLIENT LOGO

CLIENT:
UNITED STATES ENVIRONMENTAL PROTECTION AGENCY

AMEC Earth & Environmental
690 Commonwealth Center
11003 Bluegrass Parkway
Louisville, Ky 40299
(502) 267-0700

DWN BY:	CAE
CHK'D BY:	MGS
DATUM:	
PROJECTION:	
SCALE:	AS SHOWN

PROJECT
ASSESSMENT OF DAM SAFETY OF COAL COMBUSTION SURFACE IMPOUNDMENTS

TITLE
DAYTON POWER AND LIGHT COMPANY
O.H. HUTCHINGS STATION, MIAMISBURG, OH
1976 SLOPE STABILITY CROSS SECTIONS AND BORING LOCATIONS

DATE:	9/15/10
PROJECT NO:	3-2106-0177-0006
REV. NO.:	
FIGURE No.	8

S:\Geosciences\Proposals\EPA Coal Impoundment Inspection\EPA CCW June Round 6\Dayton Power- Hutchings\CAD GIS Files\hutchingsfig8.dwg - Layout1 - Sep. 16, 2010 9:44am - chris.eger

APPENDIX A
Waste Impoundment Inspection Forms

Coal Combustion Dam Inspection Checklist Form

US Environmental Protection Agency

Site Name: O. H. Hutchings Station	Date: August 18, 2010
Unit Name: East Primary Settling Pond	Operator's Name: Dayton Power and Light Co.
Unit I.D.:	Hazard Potential Classification: High **Significant** Low
Inspector's Name: Don Dotson, P.E., Mary Swiderski, EIT	

Check the appropriate box below. Provide comments when appropriate. If not applicable or not available, record "N/A". Any unusual conditions or construction practices that should be noted in the comments section. For large diked embankments, separate checklists may be used for different embankment areas. If separate forms are used, identify approximate area that the form applies to in comments.

	Yes	No		Yes	No
1. Frequency of Company's Dam Inspections?	Quarterly		18. Sloughing or bulging on slopes?		X
2. Pool elevation (operator records)?	unknown		19. Major erosion or slope deterioration?	X	
3. Decant inlet elevation (operator records)?	700.00		20. Decant Pipes:		
4. Open channel spillway elevation (operator records)?	n/a		Is water entering inlet, but not exiting outlet?	undetermined	
5. Lowest dam crest elevation (operator records)?	unknown		Is water exiting outlet, but not entering inlet?	undetermined	
6. If instrumentation is present, are readings recorded (operator records)?		X	Is water exiting outlet flowing clear?	undetermined	
7. Is the embankment currently under construction?		X	21. Seepage (specify location, if seepage carries fines, and approximate seepage rate below):		
8. Foundation preparation (remove vegetation,stumps, topsoil in area where embankment fill will be placed)?	unknown		From underdrain?		X
9. Trees growing on embankment? (If so, indicate largest diameter below)	X		At isolated points on embankment slopes?	X	
10. Cracks or scarps on crest?		X	At natural hillside in the embankment area?		X
11. Is there significant settlement along the crest?	X		Over widespread areas?		X
12. Are decant trashracks clear and in place?	X		From downstream foundation area?	X	
13. Depressions or sinkholes in tailings surface or whirlpool in the pool area?		X	"Boils" beneath stream or ponded water?		X
14. Clogged spillways, groin or diversion ditches?		X	Around the outside of the decant pipe?		X
15. Are spillway or ditch linings deteriorated?		X	22. Surface movements in valley bottom or on hillside?		X
16. Are outlets of decant or underdrains blocked?	unknown		23. Water against downstream toe?	X	
17. Cracks or scarps on slopes?		X	24. Were Photos taken during the dam inspection?	X	

Major adverse changes in these items could cause instability and should be reported for further evaluation. Adverse conditions noted in these items should normally be described (extent, location, volume, etc.) in the space below and on the back of this sheet.

Inspection Issue #	Comments
1	Quarterly inspections beginning in 2010, undocumented daily inspections performed by plant personnel.
2,5	No survey data, no staff gauges installed in ponds.
9	Maximum tree size – approximately 6 inch diameter.
11	Noticeable depressions which would affect freeboard.
16	Water level in secondary settling pond was 2 feet higher than pond water, flow of water reversed and outlets were submerged, unable to determine if blocked.
19	Southern interior slope appeared to be eroded.
20	Observed water entering inlet, however could not see exiting outlet (see note from inspection issue 16).
21	Seepage observed along southern downstream toe.
23	Great Miami River along Northern and Eastern downstream toe.

Coal Combustion Waste (CCW)
Impoundment Inspection

Impoundment NPDES Permit # OH0009261

INSPECTOR Don Dotson P.E/ Mary Swiderski

Date August 18, 2010

Impoundment Name East Primary Settling Pond
Impoundment Company Dayton Power and Light Company – O.H. Hutchings Station
EPA Region 5
State Agency (Field Office) Address
401 East Fifth Street
Dayton, OH 45402

Name of Impoundment East Primary Settling Pond
(Report each impoundment on a separate form under the same Impoundment NPDES Permit number)

New x Update _____

	Yes	No
Is impoundment currently under construction?		x
Is water or ccw currently being pumped into the impoundment?	x	

IMPOUNDMENT FUNCTION: Fly ash and bottom ash settling pond

Nearest Downstream Town : Name Chautauqua, OH
Distance from the impoundment 1 ¼ miles
Impoundment Location: Longitude -84 Degrees 17 Minutes 36.8 Seconds
Latitude 39 Degrees 36 Minutes 42.4 Seconds
State OH County Montgomery

Does a state agency regulate this impoundment? YES X NO _____

If So Which State Agency? Ohio Dam Safety

HAZARD POTENTIAL (In the event the impoundment should fail, the following would occur):

_____**LESS THAN LOW HAZARD POTENTIAL:** Failure or misoperation of the dam results in no probable loss of human life or economic or environmental losses.

_____**LOW HAZARD POTENTIAL:** Dams assigned the low hazard potential classification are those where failure or misoperation results in no probable loss of human life and low economic and/or environmental losses. Losses are principally limited to the owner's property.

__X___**SIGNIFICANT HAZARD POTENTIAL:** Dams assigned the significant hazard potential classification are those dams where failure or misoperation results in no probable loss of human life but can cause economic loss, environmental damage, disruption of lifeline facilities, or can impact other concerns. Significant hazard potential classification dams are often located in predominantly rural or agricultural areas but could be located in areas with population and significant infrastructure.

_____**HIGH HAZARD POTENTIAL:** Dams assigned the high hazard potential classification are those where failure or misoperation will probably cause loss of human life.

DESCRIBE REASONING FOR HAZARD RATING CHOSEN:

- Close proximity to the Great Miami River and local access roads

CONFIGURATION:

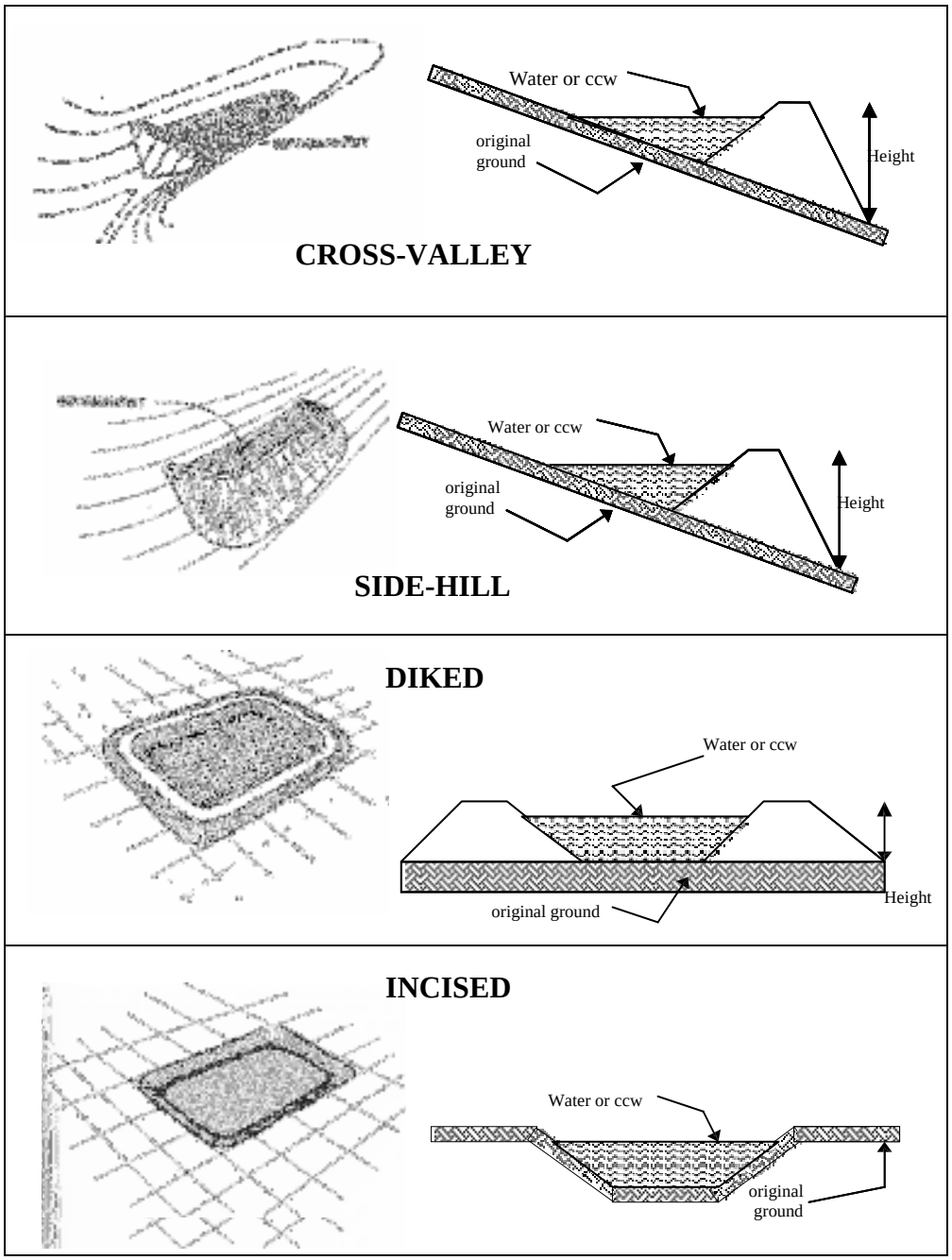

_____Cross-Valley
_____Side-Hill
__x__Diked
_____Incised (form completion optional)
_____Combination Incised/Diked

Embankment Height __23_____feet Embankment Material__Earthern Mtls.__
Pool Area ____5.40_____ acres Liner _undertermined_____
Current Freeboard _unknown*_ feet Liner Permeability _-_____

*No gauges/recent surveys to indicate water elevation.

TYPE OF OUTLET (Mark all that apply)

_n/a__Open Channel Spillway
_____Trapezoidal
_____Triangular
_____Rectangular
_____Irregular

_____depth
_____bottom (or average) width
_____top width
_____

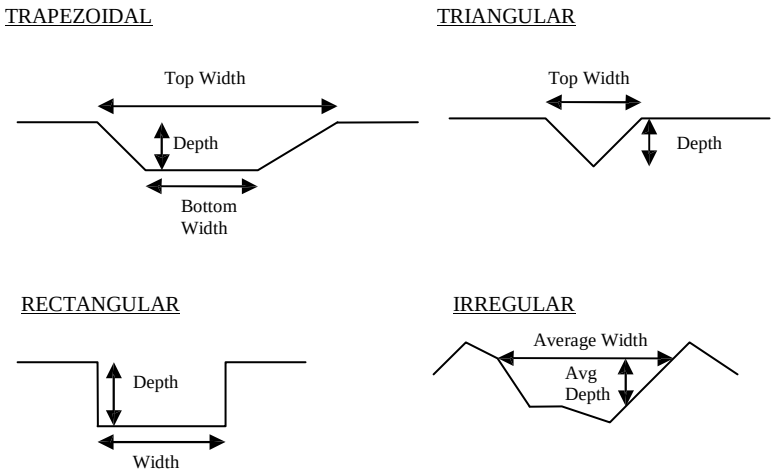

__x__Outlet

__24”__inside diameter

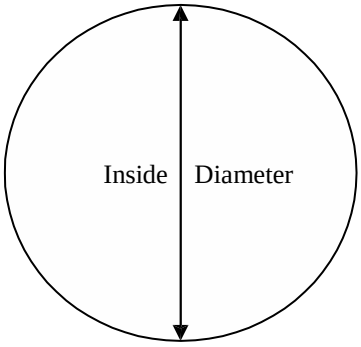

Material
_____corrugated metal
_____welded steel
__x___concrete
_____plastic (hdpe, pvc, etc.)
_____other (specify) _____

_____

Is water flowing through the outlet? YES _____ NO _____
Unknown-could not see outlet

_____No Outlet

__X___Other Type of Outlet (specify) Emergency outlet between east and west ponds, at elevation 706 feet, 18” RCP

The Impoundment was Designed By unknown

Has there ever been a failure at this site? YES _____NO ___x_____

If So When? _____

If So Please Describe : _____

Has there ever been significant seepages at this site? YES __X_____NO _____

If So When? _____

IF So Please Describe: _____

A report prepared by Bowser Morner titled "Soil Investigation in Area of Ash Ponds and Treatment Facilities, O.H. Hutchings Station, Chautauqua, Ohio" dated May 17, 1976 includes drawing "Boring Location Plan" sheet 1 of 2 identifies an area of "approximate line of seepage" and "existing slides." Plant personnel indicate the presence of a grout curtain along the eastern dike of the East Primary Settling Pond in the area of observed seepage. Details regarding design of the curtain were not available. Additionally, seepage along the southern downstream toe, which was noted during the on-site inspection, is considered typical.

Has there ever been any measures undertaken to monitor/lower Phreatic water table levels based on past seepages or breaches at this site? YES _____NO _____
UNKNOWN

If so, which method (e.g., piezometers, gw pumping,...)? _____

If so Please Describe : _____

Coal Combustion Dam Inspection Checklist Form

US Environmental Protection Agency

Site Name: O. H. Hutchings Station	Date: August 18, 2010
Unit Name: West Primary Settling Pond	Operator's Name: Dayton Power and Light Co.
Unit I.D.:	Hazard Potential Classification: High **Significant** Low
Inspector's Name: Don Dotson, P.E., Mary Swiderski, EIT	

Check the appropriate box below. Provide comments when appropriate. If not applicable or not available, record "N/A". Any unusual conditions or construction practices that should be noted in the comments section. For large diked embankments, separate checklists may be used for different embankment areas. If separate forms are used, identify approximate area that the form applies to in comments.

	Yes	No		Yes	No
1. Frequency of Company's Dam Inspections?	Quarterly		18. Sloughing or bulging on slopes?	X	
2. Pool elevation (operator records)?	unknown		19. Major erosion or slope deterioration?	X	
3. Decant inlet elevation (operator records)?	700.00		20. Decant Pipes:		
4. Open channel spillway elevation (operator records)?	n/a		Is water entering inlet, but not exiting outlet?	undetermined	
5. Lowest dam crest elevation (operator records)?	unknown		Is water exiting outlet, but not entering inlet?	undetermined	
6. If instrumentation is present, are readings recorded (operator records)?		X	Is water exiting outlet flowing clear?	undetermined	
7. Is the embankment currently under construction?		X	21. Seepage (specify location, if seepage carries fines, and approximate seepage rate below):		
8. Foundation preparation (remove vegetation,stumps, topsoil in area where embankment fill will be placed)?	unknown		From underdrain?		X
9. Trees growing on embankment? (If so, indicate largest diameter below)	X		At isolated points on embankment slopes?		X
10. Cracks or scarps on crest?		X	At natural hillside in the embankment area?		X
11. Is there significant settlement along the crest?	X		Over widespread areas?		X
12. Are decant trashracks clear and in place?		X	From downstream foundation area?	X	
13. Depressions or sinkholes in tailings surface or whirlpool in the pool area?		X	"Boils" beneath stream or ponded water?		X
14. Clogged spillways, groin or diversion ditches?		X	Around the outside of the decant pipe?		X
15. Are spillway or ditch linings deteriorated?		X	22. Surface movements in valley bottom or on hillside?		X
16. Are outlets of decant or underdrains blocked?	unknown		23. Water against downstream toe?		X
17. Cracks or scarps on slopes?	unknown		24. Were Photos taken during the dam inspection?	X	

Major adverse changes in these items could cause instability and should be reported for further evaluation. Adverse conditions noted in these items should normally be described (extent, location, volume, etc.) in the space below and on the back of this sheet.

Inspection Issue #	Comments
1	Quarterly inspections beginning in 2010, undocumented daily inspections performed by plant personnel.
2,5	No survey data, no staff gauges installed in ponds.
9	Maximum tree size – approximately 2 inch diameter along southern downstream slope.
11	Noticeable depressions which would affect freeboard.
16	Water level in secondary settling pond was 2 feet higher than pond water, flow of water reversed and outlets were submerged, unable to determine if blocked.
17	Heavy vegetation obstructing view.
18,19	Southern interior slope appeared over steep.
20	Observed water entering inlet, however could not see exiting outlet (see note from inspection issue 16).
21	Seepage observed along southern downstream toe.

Coal Combustion Waste (CCW)
Impoundment Inspection

Impoundment NPDES Permit # OH0009261

INSPECTOR Don Dotson P.E/ Mary Swiderski

Date August 18, 2010

Impoundment Name West Primary Settling Pond
Impoundment Company Dayton Power and Light Company – O.H. Hutchings Station
EPA Region 5
State Agency (Field Office) Address
401 East Fifth Street
Dayton, OH 45402

Name of Impoundment West Primary Settling Pond
(Report each impoundment on a separate form under the same Impoundment NPDES Permit number)

New x Update _____

	Yes	No
Is impoundment currently under construction?		x
Is water or ccw currently being pumped into the impoundment?	x	

IMPOUNDMENT FUNCTION: Fly ash and bottom ash settling pond

Nearest Downstream Town : Name Chautauqua, OH
Distance from the impoundment 1 ¼ miles
Impoundment Location:
Longitude -84 Degrees 17 Minutes 41.79 Seconds
Latitude 39 Degrees 36 Minutes 41.87 Seconds
State OH County Montgomery

Does a state agency regulate this impoundment? YES X NO _____

If So Which State Agency? Ohio Dam Safety

HAZARD POTENTIAL (In the event the impoundment should fail, the following would occur):

_____**LESS THAN LOW HAZARD POTENTIAL:** Failure or misoperation of the dam results in no probable loss of human life or economic or environmental losses.

_____**LOW HAZARD POTENTIAL:** Dams assigned the low hazard potential classification are those where failure or misoperation results in no probable loss of human life and low economic and/or environmental losses. Losses are principally limited to the owner's property.

__X___**SIGNIFICANT HAZARD POTENTIAL:** Dams assigned the significant hazard potential classification are those dams where failure or misoperation results in no probable loss of human life but can cause economic loss, environmental damage, disruption of lifeline facilities, or can impact other concerns. Significant hazard potential classification dams are often located in predominantly rural or agricultural areas but could be located in areas with population and significant infrastructure.

_____**HIGH HAZARD POTENTIAL:** Dams assigned the high hazard potential classification are those where failure or misoperation will probably cause loss of human life.

DESCRIBE REASONING FOR HAZARD RATING CHOSEN:

- Close proximity to the Great Miami River and local access roads

CONFIGURATION:

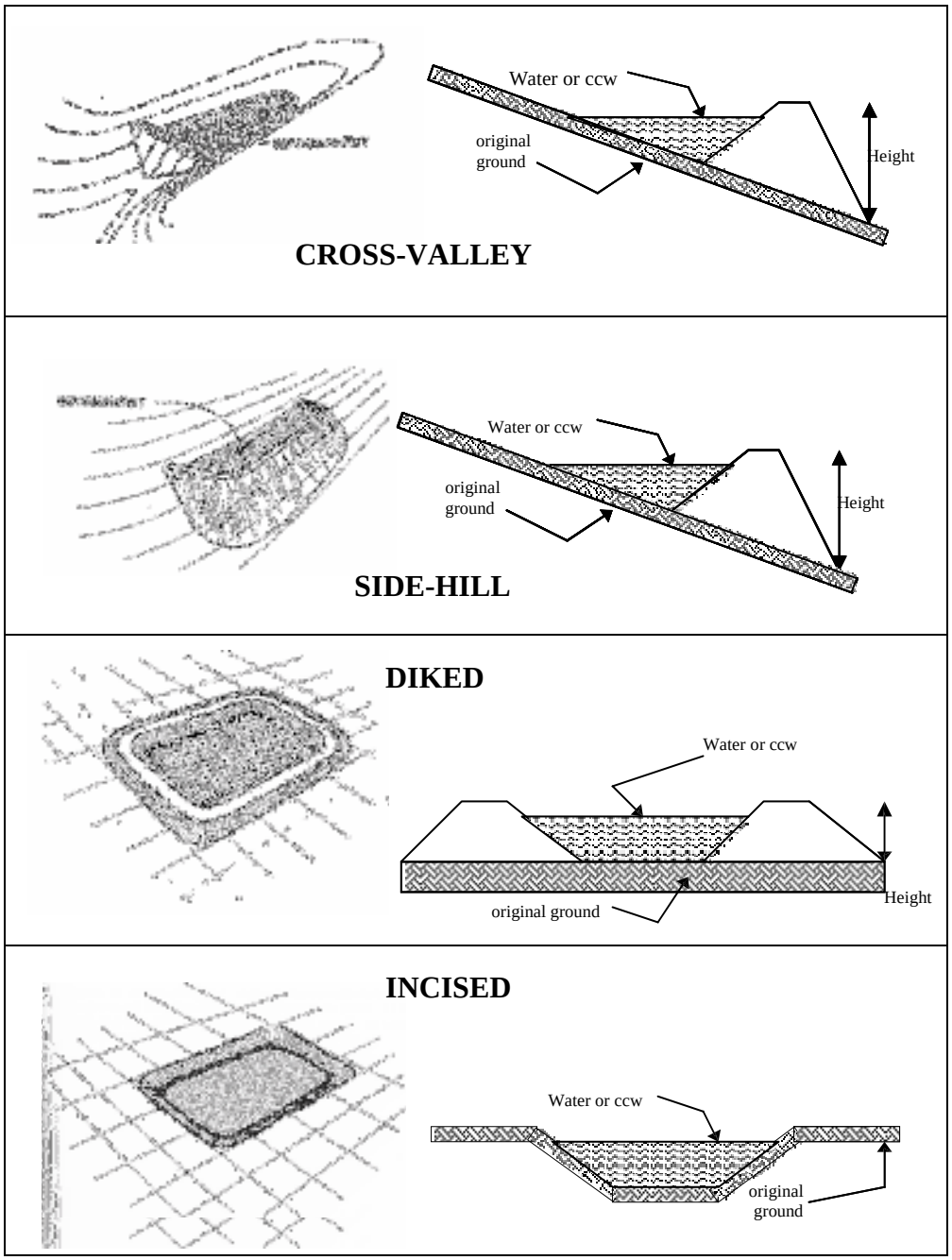

_____Cross-Valley
_____Side-Hill
__x__Diked
_____Incised (form completion optional)
_____Combination Incised/Diked

Embankment Height __23_____feet Embankment Material__Earthern Mtls.__
Pool Area ____7.88_____ acres Liner _undertermined_____
Current Freeboard _unknown*_ feet Liner Permeability _-_____

*No gauges/recent surveys to indicate water elevation.

TYPE OF OUTLET (Mark all that apply)

_n/a__Open Channel Spillway
_____Trapezoidal
_____Triangular
_____Rectangular
_____Irregular

_____depth
_____bottom (or average) width
_____top width
_____

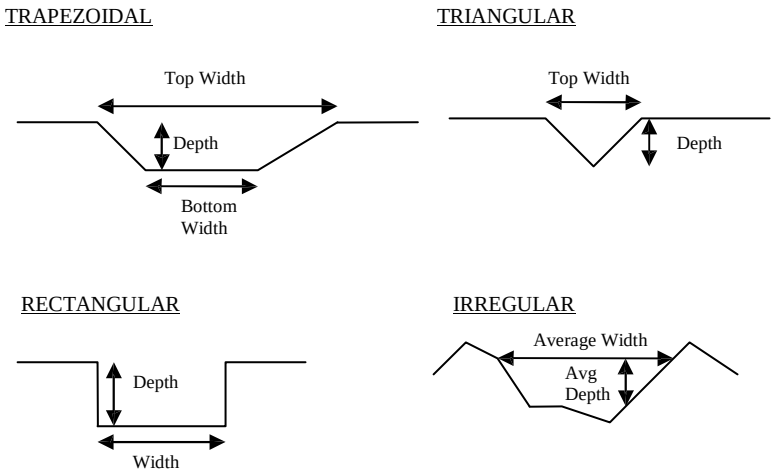

__x__Outlet

__24”__inside diameter

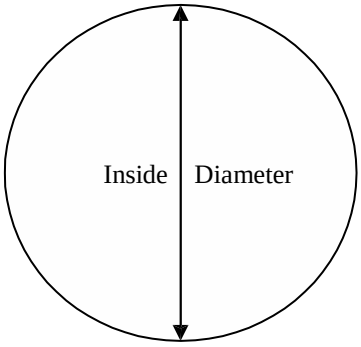

Material
_____corrugated metal
_____welded steel
__x___concrete
_____plastic (hdpe, pvc, etc.)
_____other (specify) _____

_____

Is water flowing through the outlet? YES _____ NO _____
Unknown-could not see outlet

_____No Outlet

__X__Other Type of Outlet (specify) Emergency outlet between east and west ponds, at elevation 706 feet, 18” RCP

The Impoundment was Designed By unknown

Has there ever been a failure at this site? YES _____NO ___x_____

If So When? _____

If So Please Describe : _____

Has there ever been significant seepages at this site? YES _____NO __x____

If So When? _____

IF So Please Describe: _____

Has there ever been any measures undertaken to monitor/lower Phreatic water table levels based on past seepages or breaches at this site? YES _____NO __x_____

If so, which method (e.g., piezometers, gw pumping,...)? _____

If so Please Describe : _____

Coal Combustion Dam Inspection Checklist Form

US Environmental Protection Agency

Site Name: O. H. Hutchings Station	Date: August 18, 2010
Unit Name: Secondary Settling Pond	Operator's Name: Dayton Power and Light Co.
Unit I.D.:	Hazard Potential Classification: High **Significant** Low
Inspector's Name: Don Dotson, P.E., Mary Swiderski, EIT	

Check the appropriate box below. Provide comments when appropriate. If not applicable or not available, record "N/A". Any unusual conditions or construction practices that should be noted in the comments section. For large diked embankments, separate checklists may be used for different embankment areas. If separate forms are used, identify approximate area that the form applies to in comments.

	Yes	No		Yes	No
1. Frequency of Company's Dam Inspections?	Quarterly		18. Sloughing or bulging on slopes?	X	
2. Pool elevation (operator records)?	unknown		19. Major erosion or slope deterioration?		X
3. Decant inlet elevation (operator records)?	701.00		20. Decant Pipes:		
4. Open channel spillway elevation (operator records)?	704.5		Is water entering inlet, but not exiting outlet?	undetermined	
5. Lowest dam crest elevation (operator records)?	unknown		Is water exiting outlet, but not entering inlet?	undetermined	
6. If instrumentation is present, are readings recorded (operator records)?		X	Is water exiting outlet flowing clear?	undetermined	
7. Is the embankment currently under construction?		X	21. Seepage (specify location, if seepage carries fines, and approximate seepage rate below):		
8. Foundation preparation (remove vegetation,stumps, topsoil in area where embankment fill will be placed)?	unknown		From underdrain?		X
9. Trees growing on embankment? (If so, indicate largest diameter below)	X		At isolated points on embankment slopes?		X
10. Cracks or scarps on crest?		X	At natural hillside in the embankment area?		X
11. Is there significant settlement along the crest?		X	Over widespread areas?		X
12. Are decant trashracks clear and in place?		X	From downstream foundation area?		X
13. Depressions or sinkholes in tailings surface or whirlpool in the pool area?		X	"Boils" beneath stream or ponded water?		X
14. Clogged spillways, groin or diversion ditches?		X	Around the outside of the decant pipe?		X
15. Are spillway or ditch linings deteriorated?		X	22. Surface movements in valley bottom or on hillside?		X
16. Are outlets of decant or underdrains blocked?	unknown		23. Water against downstream toe?	X	
17. Cracks or scarps on slopes?		X	24. Were Photos taken during the dam inspection?	X	

Major adverse changes in these items could cause instability and should be reported for further evaluation. Adverse conditions noted in these items should normally be described (extent, location, volume, etc.) in the space below and on the back of this sheet.

Inspection Issue #	Comments
1	Quarterly inspections beginning in 2010, undocumented daily inspections performed by plant personnel.
2,5	No survey data, no staff gauges installed in ponds.
4	Elevation represents a secondary outlet, not an open channel spillway. Outlet was not visible during inspection. According to drawing “Secondary Settling Pond Site Plan” dated August 1977, secondary outlet was a temporary discharge during construction however, due to heavy vegetation was unable to determine presence/removal during site visit.
9	Maximum tree size – approximately 6 inch diameter.
16	Outlet along river was not visible due to heavy vegetation.
18	Irregular surface noted along northern downstream face.
20	Outlet along river was not visible due to heavy vegetation, water observed to be flowing at manhole located between pond discharge and final outlet.
23	Great Miami River along Northern downstream toe.

Coal Combustion Waste (CCW)
Impoundment Inspection

Impoundment NPDES Permit # OH0009261

INSPECTOR Don Dotson P.E/ Mary Swiderski

Date August 18, 2010

Impoundment Name Secondary Settling Pond
Impoundment Company Dayton Power and Light Company – O.H. Hutchings Station
EPA Region 5
State Agency (Field Office) Address
401 East Fifth Street
Dayton, OH 45402

Name of Impoundment Secondary Settling Pond
(Report each impoundment on a separate form under the same Impoundment NPDES Permit number)

New x Update _____

	Yes	No
Is impoundment currently under construction?		x
Is water or ccw currently being pumped into the impoundment?	x	

IMPOUNDMENT FUNCTION: Fly ash and bottom ash secondary settling pond

Nearest Downstream Town : Name Chautauqua, OH
Distance from the impoundment 1 ¼ miles
Impoundment Location:
Longitude -84 Degrees 17 Minutes 41.09 Seconds
Latitude 39 Degrees 36 Minutes 47.43 Seconds
State OH County Montgomery

Does a state agency regulate this impoundment? YES X NO _____

If So Which State Agency? Ohio Dam Safety

HAZARD POTENTIAL (In the event the impoundment should fail, the following would occur):

_____**LESS THAN LOW HAZARD POTENTIAL:** Failure or misoperation of the dam results in no probable loss of human life or economic or environmental losses.

_____**LOW HAZARD POTENTIAL:** Dams assigned the low hazard potential classification are those where failure or misoperation results in no probable loss of human life and low economic and/or environmental losses. Losses are principally limited to the owner's property.

__X___**SIGNIFICANT HAZARD POTENTIAL:** Dams assigned the significant hazard potential classification are those dams where failure or misoperation results in no probable loss of human life but can cause economic loss, environmental damage, disruption of lifeline facilities, or can impact other concerns. Significant hazard potential classification dams are often located in predominantly rural or agricultural areas but could be located in areas with population and significant infrastructure.

_____**HIGH HAZARD POTENTIAL:** Dams assigned the high hazard potential classification are those where failure or misoperation will probably cause loss of human life.

DESCRIBE REASONING FOR HAZARD RATING CHOSEN:

- Close proximity to the Great Miami River and local access roads

CONFIGURATION:

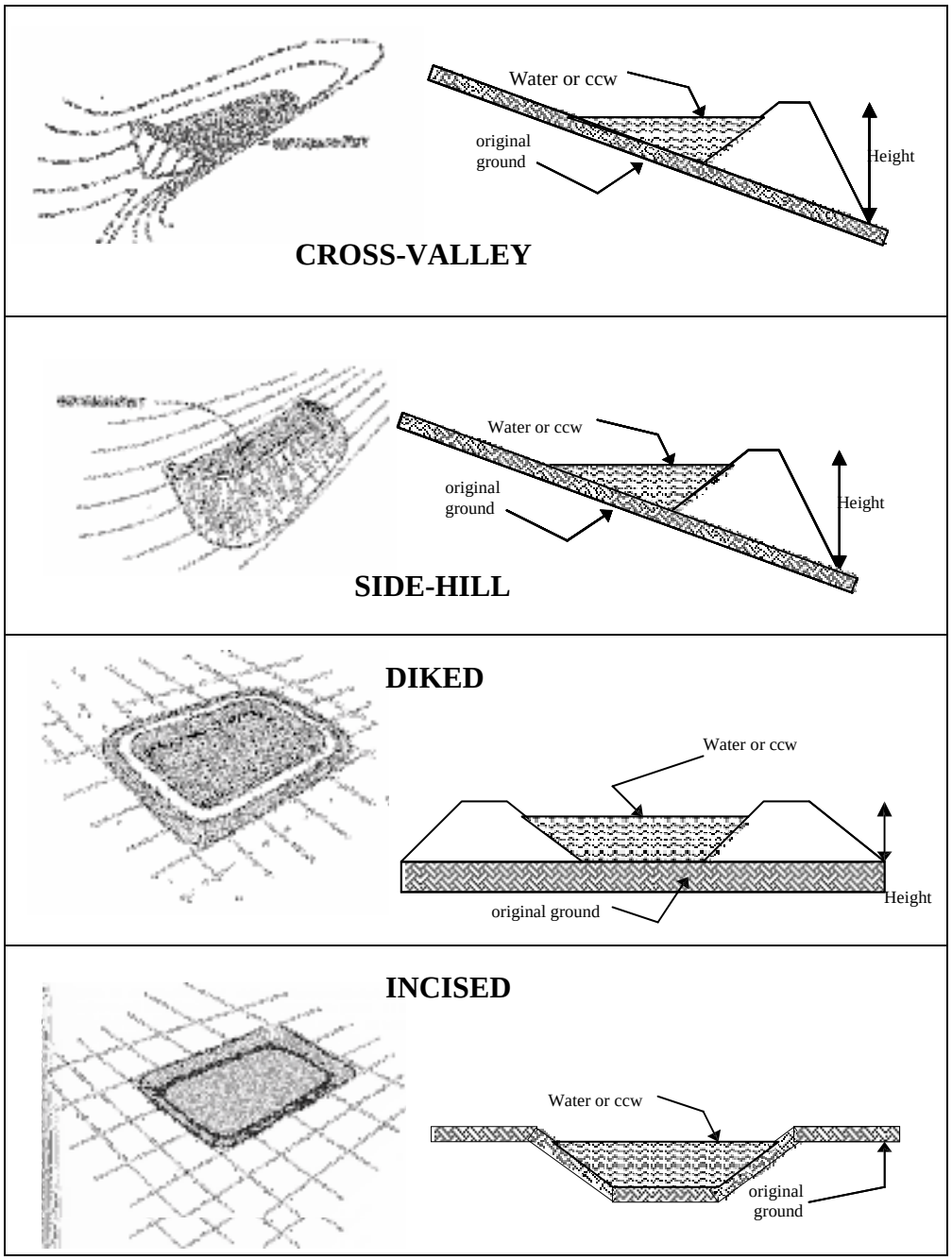

_____Cross-Valley
_____Side-Hill
__X__Diked
_____Incised (form completion optional)
_____Combination Incised/Diked

Embankment Height __16_____feet Embankment Material__Earthern Mtls.__
Pool Area ____1.75_____ acres Liner _Clay cap_____
Current Freeboard _unknown*_ feet Liner Permeability _-_____

*No gauges/recent surveys to indicate water elevation.

TYPE OF OUTLET (Mark all that apply)

_n/a__Open Channel Spillway
_____Trapezoidal
_____Triangular
_____Rectangular
_____Irregular

_____depth
_____bottom (or average) width
_____top width
_____

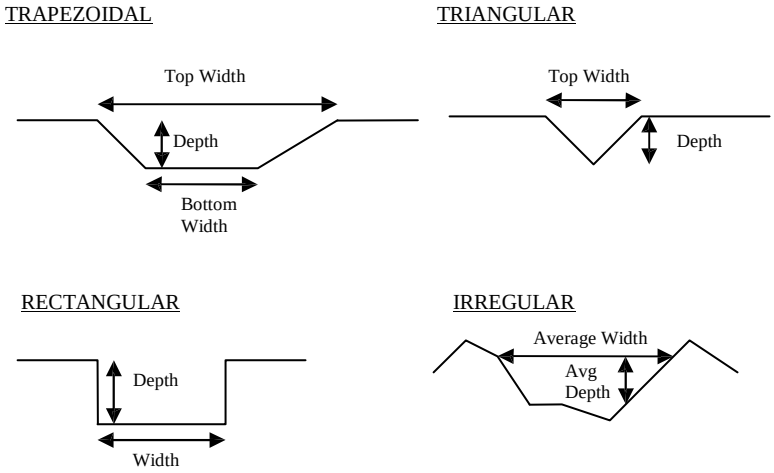

__x__Outlet

__21”__inside diameter

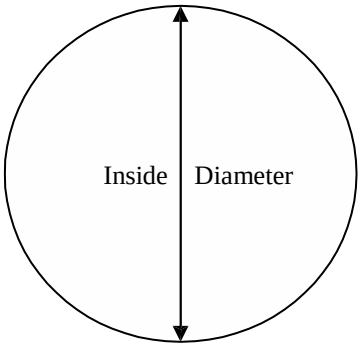

Material
_____corrugated metal
_____welded steel
_X____concrete
_____plastic (hdpe, pvc, etc.)
_____other (specify) _____

_____

Is water flowing through the outlet? YES _____ NO _____

Unknown-water noted to be flowing through manhole located between pond discharge structure and final outlet, however, due to heavy vegetation at the time of site visit, was unable to observe final outlet.

_____No Outlet

_X___Other Type of Outlet (specify) Secondary outlet – 24” CMP, noted on drawing “Secondary Settling Pond Site Plan” dated August 1977 to be a temporary discharge during construction, however due to heavy vegetation was unable to confirm existence/removal during site visit.

The Impoundment was Designed By unknown

Has there ever been a failure at this site? YES _____NO ___x_____

If So When? _____

If So Please Describe : _____

Has there ever been significant seepages at this site? YES _____NO __X____

If So When? _____

IF So Please Describe: _____

Has there ever been any measures undertaken to monitor/lower Phreatic water table levels based on past seepages or breaches at this site? YES _NO __X____

If so, which method (e.g., piezometers, gw pumping,...)? _____

If so Please Describe : _____

APPENDIX B
Site Photo Log Map and Site Photos

UNITED STATES
ENVIRONMENTAL PROTECTION AGENCY

AMEC Earth & Environmental
690 Commonwealth Business Center
11003 Bluegrass Parkway
Louisville, KY 40299

DWN BY:	DJC
CKD BY:	MS
Datum:	NAD 83
Projection:	Ohio SPC S
Scale:	As Shown

ASSESSMENT OF DAM SAFETY OF
COAL COMBUSTION SURFACE IMPOUNDMENTS

DAYTON POWER AND LIGHT COMPANY
O.H. HUTCHINGS ELECTRIC GENERATING STATION
ASH POND
PHOTO LOCATION MAP

REV. No.:	A
Date:	9-15-10
Project No:	3-2106-0177-0006
Figure No:	B-1

SITE PHOTOS

EAST PRIMARY SETTLING POND
SITE PHOTOS

E-1

FROM ACCESS ROAD LOOKING EAST ALONG SOUTHERN DOWNSTREAM SLOPE

E-2

FROM ACCESS ROAD LOOKING NORTHEAST TOWARD POND

AMEC Earth & Environmental
690 Commonwealth Center
11003 Bluegrass Parkway
Louisville, Ky 40299
(502) 267-0700

CLIENT LOGO	CLIENT: UNITED STATES ENVIRONMENTAL PROTECTION AGENCY		
PROJECT: ASSESSMENT OF DAM SAFETY OF COAL COMBUSTION SURFACE IMPOUNDMENTS	DWN BY: CAE	DATUM:	DATE: 8/24/10
TITLE: DAYTON POWER AND LIGHT COMPANY O.H. HUTCHINGS STATION, MIAMISBURG, OH EAST PRIMARY SETTLING POND SITE PHOTOS	CHK'D BY: MGS	REV. NO.:	PROJECT NO: 3-2106-0177-0006
	PROJECTION:	SCALE:	PAGE NO.: B-2

E-3

FROM ACCESS ROAD LOOKING EAST TOWARD POND

E-4

INLET PIPES FROM PLANT TO EAST PRIMARY SETTLING POND LOCATED AT SOUTHWEST CORNER OF POND

AMEC Earth & Environmental
690 Commonwealth Center
11003 Bluegrass Parkway
Louisville, Ky 40299
(502) 267-0700

CLIENT LOGO	CLIENT: UNITED STATES ENVIRONMENTAL PROTECTION AGENCY		
PROJECT: ASSESSMENT OF DAM SAFETY OF COAL COMBUSTION SURFACE IMPOUNDMENTS	DWN BY: CAE	DATUM:	DATE: 8/24/10
TITLE: DAYTON POWER AND LIGHT COMPANY O.H. HUTCHINGS STATION, MIAMISBURG, OH EAST PRIMARY SETTLING POND SITE PHOTOS	CHK'D BY: MGS	REV. NO.:	PROJECT NO: 3-2106-0177-0006
	PROJECTION:	SCALE:	PAGE NO.: B-3

E-5

FROM NORTHERN CREST OF POND LOOKING SOUTH

E-6

FROM NORTHERN CREST LOOKING WEST TOWARDS VERTICAL INLET STRUCTURE

AMEC Earth & Environmental
690 Commonwealth Center
11003 Bluegrass Parkway
Louisville, Ky 40299
(502) 267-0700

CLIENT LOGO	CLIENT: UNITED STATES ENVIRONMENTAL PROTECTION AGENCY		
PROJECT: ASSESSMENT OF DAM SAFETY OF COAL COMBUSTION SURFACE IMPOUNDMENTS	DWN BY: CAE	DATUM:	DATE: 8/24/10
TITLE: DAYTON POWER AND LIGHT COMPANY O.H. HUTCHINGS STATION, MIAMISBURG, OH EAST PRIMARY SETTLING POND SITE PHOTOS	CHK'D BY: MGS	REV. NO.:	PROJECT NO: 3-2106-0177-0006
	PROJECTION:	SCALE:	PAGE NO.: B-4

E-7

FROM EASTERN DIKE LOOKING NORTH TOWARDS GREAT MIAMI RIVER

E-8

EMERGENCY OVERFLOW BETWEEN WEST PRIMARY SETTLING POND AND EAST PRIMARY SETTLING POND

AMEC Earth & Environmental 690 Commonwealth Center 11003 Bluegrass Parkway Louisville, Ky 40299 (502) 267-0700	amec	CLIENT LOGO	CLIENT UNITED STATES ENVIRONMENTAL PROTECTION AGENCY	
PROJECT ASSESSMENT OF DAM SAFETY OF COAL COMBUSTION SURFACE IMPOUNDMENTS		DWN BY: CAE	DATUM:	DATE: 8/24/10
TITLE DAYTON POWER AND LIGHT COMPANY O.H. HUTCHINGS STATION, MIAMISBURG, OH EAST PRIMARY SETTLING POND SITE PHOTOS		CHK'D BY: MGS	REV. NO.:	PROJECT NO: 3-2106-0177-0006
		PROJECTION:	SCALE:	PAGE NO.. B-5

E-9

FROM EASTERN DIKE LOOKING SOUTH TOWARDS POWER PLANT

E-10

MONITORING WELL AT CREST OF SOUTHEASTERN CORNER OF POND

AMEC Earth & Environmental 690 Commonwealth Center 11003 Bluegrass Parkway Louisville, Ky 40299 (502) 267-0700	amec	CLIENT LOGO	CLIENT UNITED STATES ENVIRONMENTAL PROTECTION AGENCY	
PROJECT ASSESSMENT OF DAM SAFETY OF COAL COMBUSTION SURFACE IMPOUNDMENTS		DWN BY: CAE	DATUM:	DATE: 8/24/10
TITLE DAYTON POWER AND LIGHT COMPANY O.H. HUTCHINGS STATION, MIAMISBURG, OH EAST PRIMARY SETTLING POND SITE PHOTOS		CHK'D BY: MGS	REV. NO.:	PROJECT NO: 3-2106-0177-0006
		PROJECTION:	SCALE:	PAGE NO.. B-6

E-11

WET AREA ALONG SOUTHERN DOWNSTREAM TOE

E-12

WET AREA ALONG SOUTHERN DOWNSTREAM TOE

AMEC Earth & Environmental
690 Commonwealth Center
11003 Bluegrass Parkway
Louisville, Ky 40299
(502) 267-0700

CLIENT LOGO	CLIENT	UNITED STATES ENVIRONMENTAL PROTECTION AGENCY	
PROJECT: ASSESSMENT OF DAM SAFETY OF COAL COMBUSTION SURFACE IMPOUNDMENTS	DWN BY: CAE	DATUM:	DATE: 8/24/10
TITLE: DAYTON POWER AND LIGHT COMPANY O.H. HUTCHINGS STATION, MIAMISBURG, OH EAST PRIMARY SETTLING POND SITE PHOTOS	CHK'D BY: MGS	REV. NO.:	PROJECT NO: 3-2106-0177-0006
	PROJECTION:	SCALE:	PAGE NO.: B-7

E-13

WET AREA ALONG SOUTHERN DOWNSTREAM TOE

E-14

STORM DRAIN ALONG SOUTHERN DOWNSTREAM TOE

AMEC Earth & Environmental 690 Commonwealth Center 11003 Bluegrass Parkway Louisville, Ky 40299 (502) 267-0700	amec	CLIENT LOGO	CLIENT UNITED STATES ENVIRONMENTAL PROTECTION AGENCY	
PROJECT ASSESSMENT OF DAM SAFETY OF COAL COMBUSTION SURFACE IMPOUNDMENTS		DWN BY: CAE	DATUM:	DATE: 8/24/10
TITLE DAYTON POWER AND LIGHT COMPANY O.H. HUTCHINGS STATION, MIAMISBURG, OH EAST PRIMARY SETTLING POND SITE PHOTOS		CHK'D BY: MGS	REV. NO.:	PROJECT NO: 3-2106-0177-0006
		PROJECTION:	SCALE:	PAGE NO.. B-8

E-15

PIPE OUTLET LOCATED ALONG SOUTHERN DOWNSTREAM TOE

E-16

SOUTHERN DOWNSTREAM SLOPE

AMEC Earth & Environmental
690 Commonwealth Center
11003 Bluegrass Parkway
Louisville, Ky 40299
(502) 267-0700

CLIENT LOGO

CLIENT: UNITED STATES ENVIRONMENTAL PROTECTION AGENCY

PROJECT: ASSESSMENT OF DAM SAFETY OF COAL COMBUSTION SURFACE IMPOUNDMENTS	DWN BY: CAE	DATUM:	DATE: 8/24/10
TITLE: DAYTON POWER AND LIGHT COMPANY O.H. HUTCHINGS STATION, MIAMISBURG, OH EAST PRIMARY SETTLING POND SITE PHOTOS	CHK'D BY: MGS	REV. NO.:	PROJECT NO: 3-2106-0177-0006
	PROJECTION:	SCALE:	PAGE NO.: B-9

E-17

EROSION RILL ALONG WESTERN INTERIOR SLOPE

E-18

EMERGENCY OVERFLOW BETWEEN WEST PRIMARY SETTLING POND AND EAST PRIMARY SETTLING POND

AMEC Earth & Environmental 690 Commonwealth Center 11003 Bluegrass Parkway Louisville, Ky 40299 (502) 267-0700	amec	CLIENT LOGO	CLIENT UNITED STATES ENVIRONMENTAL PROTECTION AGENCY	
PROJECT ASSESSMENT OF DAM SAFETY OF COAL COMBUSTION SURFACE IMPOUNDMENTS		DWN BY: CAE	DATUM:	DATE: 8/24/10
TITLE DAYTON POWER AND LIGHT COMPANY O.H. HUTCHINGS STATION, MIAMISBURG, OH EAST PRIMARY SETTLING POND SITE PHOTOS		CHK'D BY: MGS	REV. NO.:	PROJECT NO: 3-2106-0177-0006
		PROJECTION:	SCALE:	PAGE NO.. B-10

E-19

VERTICAL INLET STRUCTURE LOCATED IN NORTHWESTERN PORTION OF POND

E-20

FILTER BACKWASH FROM TREATMENT PLANT

AMEC Earth & Environmental
690 Commonwealth Center
11003 Bluegrass Parkway
Louisville, Ky 40299
(502) 267-0700

CLIENT LOGO	CLIENT		
	UNITED STATES ENVIRONMENTAL PROTECTION AGENCY		
PROJECT: ASSESSMENT OF DAM SAFETY OF COAL COMBUSTION SURFACE IMPOUNDMENTS	DWN BY: CAE	DATUM:	DATE: 8/24/10
TITLE: DAYTON POWER AND LIGHT COMPANY O.H. HUTCHINGS STATION, MIAMISBURG, OH EAST PRIMARY SETTLING POND SITE PHOTOS	CHK'D BY: MGS	REV. NO.:	PROJECT NO: 3-2106-0177-0006
	PROJECTION:	SCALE:	PAGE NO.: B-11

WEST PRIMARY SETTLING POND
SITE PHOTOS

W-1

ACCESS ROAD TO ASH PONDS. WEST PRIMARY SETTLING POND SOUTHERN DOWNSTREAM FACE TO LEFT OF ROADWAY, EAST PRIMARY SETTLING POND SOUTHERN DOWNSTREAM FACE TO RIGHT OF ROADWAY

W-2

FROM ACCESS ROAD LOOKING WEST ALONG POND SOUTHERN DOWNSTREAM SLOPE

AMEC Earth & Environmental
690 Commonwealth Center
11003 Bluegrass Parkway
Louisville, Ky 40299
(502) 267-0700

amec

CLIENT LOGO

CLIENT
UNITED STATES ENVIRONMENTAL PROTECTION AGENCY

PROJECT: ASSESSMENT OF DAM SAFETY OF COAL COMBUSTION SURFACE IMPOUNDMENTS	DWN BY: CAE	DATUM:	DATE: 8/24/10
TITLE: DAYTON POWER AND LIGHT COMPANY O.H. HUTCHINGS STATION, MIAMISBURG, OH WEST PRIMARY SETTLING POND SITE PHOTOS	CHK'D BY: MGS	REV. NO.:	PROJECT NO: 3-2106-0177-0006
	PROJECTION:	SCALE:	PAGE NO.: B-12

W-3

INLET PIPES FROM PLANT TO WEST PRIMARY SETTLING POND LOCATED ALONG SOUTHERN DOWNSTREAM SLOPE PARALLEL TO ACCESS ROAD

W-4

INLET PIPES FROM PLANT TO WEST PRIMARY SETTLING POND LOCATED ALONG SOUTHERN DOWNSTREAM SLOPE PARALLEL TO ACCESS ROAD

AMEC Earth & Environmental
690 Commonwealth Center
11003 Bluegrass Parkway
Louisville, Ky 40299
(502) 267-0700

CLIENT LOGO	CLIENT: UNITED STATES ENVIRONMENTAL PROTECTION AGENCY		
PROJECT: ASSESSMENT OF DAM SAFETY OF COAL COMBUSTION SURFACE IMPOUNDMENTS	DWN BY: CAE	DATUM:	DATE: 8/24/10
TITLE: DAYTON POWER AND LIGHT COMPANY O.H. HUTCHINGS STATION, MIAMISBURG, OH WEST PRIMARY SETTLING POND SITE PHOTOS	CHK'D BY: MGS	REV. NO.:	PROJECT NO: 3-2106-0177-0006
	PROJECTION:	SCALE:	PAGE NO.: B-13

W-5

FROM ACCESS ROAD LOOKING WEST ALONG SOUTHERN CORNER

W-6

FROM ACCESS ROAD LOOKING NORTHWEST TOWARDS WEST PRIMARY SETTLING POND

AMEC Earth & Environmental 690 Commonwealth Center 11003 Bluegrass Parkway Louisville, Ky 40299 (502) 267-0700	amec	CLIENT LOGO	CLIENT UNITED STATES ENVIRONMENTAL PROTECTION AGENCY	
PROJECT ASSESSMENT OF DAM SAFETY OF COAL COMBUSTION SURFACE IMPOUNDMENTS		DWN BY: CAE	DATUM:	DATE: 8/24/10
TITLE DAYTON POWER AND LIGHT COMPANY O.H. HUTCHINGS STATION, MIAMISBURG, OH WEST PRIMARY SETTLING POND SITE PHOTOS		CHK'D BY: MGS	REV. NO.:	PROJECT NO: 3-2106-0177-0006
		PROJECTION:	SCALE:	PAGE NO.. B-14

W-7

INLET PIPES FROM PLANT TO WEST PRIMARY SETTLING POND LOCATED AT SOUTHEAST CORNER OF POND

W-8

INLET PIPES FROM PLANT TO WEST PRIMARY SETTLING POND LOCATED AT SOUTHEAST CORNER OF POND

AMEC Earth & Environmental 690 Commonwealth Center 11003 Bluegrass Parkway Louisville, Ky 40299 (502) 267-0700	amec	CLIENT LOGO	CLIENT UNITED STATES ENVIRONMENTAL PROTECTION AGENCY	
PROJECT ASSESSMENT OF DAM SAFETY OF COAL COMBUSTION SURFACE IMPOUNDMENTS		DWN BY: CAE	DATUM:	DATE: 8/24/10
TITLE DAYTON POWER AND LIGHT COMPANY O.H. HUTCHINGS STATION, MIAMISBURG, OH WEST PRIMARY SETTLING POND SITE PHOTOS		CHK'D BY: MGS	REV. NO.:	PROJECT NO: 3-2106-0177-0006
		PROJECTION:	SCALE:	PAGE NO.. B-15

W-9

INLET PIPES FROM PANT AND SOUTHERN UPSTREAM SLOPES

W-10

WET AREA LOCATED ALONG SOUTHERN DOWNSTREAM TOE (NOTE CAT TAILS).

AMEC Earth & Environmental 690 Commonwealth Center 11003 Bluegrass Parkway Louisville, Ky 40299 (502) 267-0700	amec	CLIENT LOGO	CLIENT UNITED STATES ENVIRONMENTAL PROTECTION AGENCY	
PROJECT ASSESSMENT OF DAM SAFETY OF COAL COMBUSTION SURFACE IMPOUNDMENTS		DWN BY: CAE	DATUM:	DATE: 8/24/10
TITLE DAYTON POWER AND LIGHT COMPANY O.H. HUTCHINGS STATION, MIAMISBURG, OH WEST PRIMARY SETTLING POND SITE PHOTOS		CHK'D BY: MGS	REV. NO.:	PROJECT NO: 3-2106-0177-0006
		PROJECTION:	SCALE:	PAGE NO.. B-16

W-11

ERODED SOUTHERN INTERIOR SLOPES

W-12

ASH NOTED ON SOUTHERN DOWNSTREAM SLOPE

AMEC Earth & Environmental
690 Commonwealth Center
11003 Bluegrass Parkway
Louisville, Ky 40299
(502) 267-0700

CLIENT LOGO

CLIENT: UNITED STATES ENVIRONMENTAL PROTECTION AGENCY

PROJECT: ASSESSMENT OF DAM SAFETY OF COAL COMBUSTION SURFACE IMPOUNDMENTS	DWN BY: CAE	DATUM:	DATE: 8/24/10
TITLE: DAYTON POWER AND LIGHT COMPANY O.H. HUTCHINGS STATION, MIAMISBURG, OH WEST PRIMARY SETTLING POND SITE PHOTOS	CHK'D BY: MGS	REV. NO.:	PROJECT NO: 3-2106-0177-0006
	PROJECTION:	SCALE:	PAGE NO.: B-17

W-13

CULVERT LOCATED AT SOUTHWESTERN TOE

W-14

LOOKING NORTH FROM SOUTHWESTERN BANK

AMEC Earth & Environmental 690 Commonwealth Center 11003 Bluegrass Parkway Louisville, Ky 40299 (502) 267-0700	amec	CLIENT LOGO	CLIENT UNITED STATES ENVIRONMENTAL PROTECTION AGENCY	
PROJECT ASSESSMENT OF DAM SAFETY OF COAL COMBUSTION SURFACE IMPOUNDMENTS		DWN BY: CAE	DATUM:	DATE: 8/24/10
TITLE DAYTON POWER AND LIGHT COMPANY O.H. HUTCHINGS STATION, MIAMISBURG, OH WEST PRIMARY SETTLING POND SITE PHOTOS		CHK'D BY: MGS	REV. NO.:	PROJECT NO: 3-2106-0177-0006
		PROJECTION:	SCALE:	PAGE NO.. B-18

W-15

OVERFLOW STRUCTURE LOCATED ALONG EASTERN INTERIOR SLOPE, WATER NOTED TO BE FLOWING INTO THE POND FROM THE SECONDARY SETTLING POND

W-16

EROSION RILL ALONG EASTERN INTERIOR SLOPE

AMEC Earth & Environmental 690 Commonwealth Center 11003 Bluegrass Parkway Louisville, Ky 40299 (502) 267-0700	amec	CLIENT LOGO	CLIENT UNITED STATES ENVIRONMENTAL PROTECTION AGENCY	
PROJECT ASSESSMENT OF DAM SAFETY OF COAL COMBUSTION SURFACE IMPOUNDMENTS		DWN BY: CAE	DATUM:	DATE: 8/24/10
TITLE DAYTON POWER AND LIGHT COMPANY O.H. HUTCHINGS STATION, MIAMISBURG, OH WEST PRIMARY SETTLING POND SITE PHOTOS		CHK'D BY: MGS	REV. NO.:	PROJECT NO: 3-2106-0177-0006
		PROJECTION:	SCALE:	PAGE NO.. B-19

W-17

EMERGENCY OVERFLOW BETWEEN WEST PRIMARY SETTLING POND AND EAST PRIMARY SETTLING POND

W-18

OVERFLOW STRUCTURE LOCATED ALONG EASTERN INTERIOR SLOPE

AMEC Earth & Environmental
690 Commonwealth Center
11003 Bluegrass Parkway
Louisville, Ky 40299
(502) 267-0700

CLIENT LOGO

CLIENT: UNITED STATES ENVIRONMENTAL PROTECTION AGENCY

PROJECT: ASSESSMENT OF DAM SAFETY OF COAL COMBUSTION SURFACE IMPOUNDMENTS	DWN BY: CAE	DATUM:	DATE: 8/24/10
TITLE: DAYTON POWER AND LIGHT COMPANY O.H. HUTCHINGS STATION, MIAMISBURG, OH WEST PRIMARY SETTLING POND SITE PHOTOS	CHK'D BY: MGS	REV. NO.:	PROJECT NO: 3-2106-0177-0006
	PROJECTION:	SCALE:	PAGE NO.: B-20

W-19

WATER FLOWING WITHIN OVERFLOW STRUCTURE INTO WEST PRIMARY SETTLING POND

W-20

WATER FLOWING WITHIN OVERFLOW STRUCTURE INTO WEST PRIMARY SETTLING POND

AMEC Earth & Environmental
690 Commonwealth Center
11003 Bluegrass Parkway
Louisville, Ky 40299
(502) 267-0700

CLIENT LOGO	CLIENT		
	UNITED STATES ENVIRONMENTAL PROTECTION AGENCY		
PROJECT: ASSESSMENT OF DAM SAFETY OF COAL COMBUSTION SURFACE IMPOUNDMENTS	DWN BY: CAE	DATUM:	DATE: 8/24/10
TITLE: DAYTON POWER AND LIGHT COMPANY O.H. HUTCHINGS STATION, MIAMISBURG, OH WEST PRIMARY SETTLING POND SITE PHOTOS	CHK'D BY: MGS	REV. NO.:	PROJECT NO: 3-2106-0177-0006
	PROJECTION:	SCALE:	PAGE NO.: B-21

W-21

FROM NORTH PORTION OF EAST DIKE LOOKING SOUTH TOWARDS OVERFLOW STRUCTURE

W-22

FROM NORTHEASTERN DIKE LOOKING SOUTHWEST

AMEC Earth & Environmental
690 Commonwealth Center
11003 Bluegrass Parkway
Louisville, Ky 40299
(502) 267-0700

CLIENT LOGO	CLIENT: UNITED STATES ENVIRONMENTAL PROTECTION AGENCY		
PROJECT: ASSESSMENT OF DAM SAFETY OF COAL COMBUSTION SURFACE IMPOUNDMENTS	DWN BY: CAE	DATUM:	DATE: 8/24/10
TITLE: DAYTON POWER AND LIGHT COMPANY O.H. HUTCHINGS STATION, MIAMISBURG, OH WEST PRIMARY SETTLING POND SITE PHOTOS	CHK'D BY: MGS	REV. NO.:	PROJECT NO: 3-2106-0177-0006
	PROJECTION:	SCALE:	PAGE NO.: B-22

SECONDARY SETTLING POND
SITE PHOTOS

S-1

FROM NORTHERN DIKE LOOKING SOUTH

S-2

FROM NORTHERN DIKE LOOKING SOUTHEAST TO TREATMENT FACILITY

AMEC Earth & Environmental
690 Commonwealth Center
11003 Bluegrass Parkway
Louisville, Ky 40299
(502) 267-0700

CLIENT LOGO	CLIENT		
	UNITED STATES ENVIRONMENTAL PROTECTION AGENCY		
PROJECT: ASSESSMENT OF DAM SAFETY OF COAL COMBUSTION SURFACE IMPOUNDMENTS	DWN BY: CAE	DATUM:	DATE: 8/24/10
TITLE: DAYTON POWER AND LIGHT COMPANY O.H. HUTCHINGS STATION, MIAMISBURG, OH SECONDARY SETTLING POND SITE PHOTOS	CHK'D BY: MGS	REV. NO.:	PROJECT NO: 3-2106-0177-0006
	PROJECTION:	SCALE:	PAGE NO.: B-23

S-3

TYPICAL VEGETATION ALONG NORTHERN DOWNSTREAM SLOPE

S-4

FROM NORTHEAST CORNER LOOKING SOUTHWEST

AMEC Earth & Environmental
690 Commonwealth Center
11003 Bluegrass Parkway
Louisville, Ky 40299
(502) 267-0700

amec

CLIENT LOGO

CLIENT
UNITED STATES ENVIRONMENTAL PROTECTION AGENCY

PROJECT ASSESSMENT OF DAM SAFETY OF COAL COMBUSTION SURFACE IMPOUNDMENTS	DWN BY: CAE	DATUM:	DATE: 8/24/10
TITLE DAYTON POWER AND LIGHT COMPANY O.H. HUTCHINGS STATION, MIAMISBURG, OH SECONDARY SETTLING POND SITE PHOTOS	CHK'D BY: MGS	REV. NO.:	PROJECT NO: 3-2106-0177-0006
	PROJECTION:	SCALE:	PAGE NO.. B-24

S-5

FROM NORTHEAST CORNER LOOKING WEST

S-6

FROM EASTERN DIKE LOOKING NORTHEAST

AMEC Earth & Environmental
690 Commonwealth Center
11003 Bluegrass Parkway
Louisville, Ky 40299
(502) 267-0700

CLIENT LOGO	CLIENT		
	UNITED STATES ENVIRONMENTAL PROTECTION AGENCY		
PROJECT: ASSESSMENT OF DAM SAFETY OF COAL COMBUSTION SURFACE IMPOUNDMENTS	DWN BY: CAE	DATUM:	DATE: 8/24/10
TITLE: DAYTON POWER AND LIGHT COMPANY O.H. HUTCHINGS STATION, MIAMISBURG, OH SECONDARY SETTLING POND SITE PHOTOS	CHK'D BY: MGS	REV. NO.:	PROJECT NO: 3-2106-0177-0006
	PROJECTION:	SCALE:	PAGE NO.: B-25

S-7

MANHOLE LOCATED BETWEEN TREATMENT STATION AND FINAL OUTLET FOR SETTLING POND

S-8

VIEW INSIDE MANHOLE FROM SETTLING POND TO FINAL OUTLET AT RIVER

AMEC Earth & Environmental 690 Commonwealth Center 11003 Bluegrass Parkway Louisville, Ky 40299 (502) 267-0700	amec	CLIENT LOGO	CLIENT UNITED STATES ENVIRONMENTAL PROTECTION AGENCY	
PROJECT ASSESSMENT OF DAM SAFETY OF COAL COMBUSTION SURFACE IMPOUNDMENTS		DWN BY: CAE	DATUM:	DATE: 8/24/10
TITLE DAYTON POWER AND LIGHT COMPANY O.H. HUTCHINGS STATION, MIAMISBURG, OH SECONDARY SETTLING POND SITE PHOTOS		CHK'D BY: MGS	REV. NO.:	PROJECT NO: 3-2106-0177-0006
		PROJECTION:	SCALE:	PAGE NO.. B-26

S-9

MANHOLE LOCATED ALONG SOUTHERN CREST OF SETTLING POND

AMEC Earth & Environmental 690 Commonwealth Center 11003 Bluegrass Parkway Louisville, Ky 40299 (502) 267-0700	amec	CLIENT LOGO	CLIENT UNITED STATES ENVIRONMENTAL PROTECTION AGENCY	
PROJECT ASSESSMENT OF DAM SAFETY OF COAL COMBUSTION SURFACE IMPOUNDMENTS		DWN BY: CAE	DATUM:	DATE: 8/24/10
TITLE DAYTON POWER AND LIGHT COMPANY O.H. HUTCHINGS STATION, MIAMISBURG, OH SECONDARY SETTLING POND SITE PHOTOS		CHK'D BY: MGS	REV. NO.:	PROJECT NO: 3-2106-0177-0006
		PROJECTION:	SCALE:	PAGE NO.. B-27

APPENDIX C
Inventory of Provided Materials

Provided Documents from Dayton Power and Light Company

1. Coal Ash Impoundment Inspection Report DP&L O.H. Hutchings Station, 9200 Chautauqua Road, Miamisburg, Ohio 45342, prepared by Civil & Environmental Consultants, Inc. dated April 30, 2009;
2. Soil Investigation in Area of Ash Ponds and Treatment Facilities, O.H. Hutchings Station, Chautauqua, Ohio, prepared by Bowser Morner, dated May 17, 1976;
3. Drawing “Secondary Settling Pond Site Plan” drawing 1301-11-1910, prepared by DP&L, dated August 1977;
4. Drawing “Treatment Building Discharge” drawing 1301-11-1913, prepared by DP&L, dated August 1978;
5. Drawing “Ash Pit Area-Site Plan” drawing 1301-11-1902, prepared by DP&L, dated August 1977;
6. Drawing “Ash Pit Overflow Profile & Details” drawing 1301-11-1911, prepared by DP&L, dated August 1977;
7. Drawing “Miscellaneous Piping Details” drawing 1301-11-1912, prepared by DP&L, dated August 1977;
8. Drawing “Ash System Fluid System Diagram” drawing 1301-11-7801, prepared by DP&L, dated September 1977;
9. Drawing “Test Borings And Soil Investigation” drawing E-72830, prepared by Ebasco Services Incorporated, date illegible;
10. DP&L Hutchings Station Site Map, prepared by Environmental Quality Management, dated September 18, 2008;
11. Ash System Narrative;
12. Graphic Display Panel, Figure 2-6, prepared by DP&L, dated 10/80
13. Purchase Order 611777 for Critter Control of Dayton, dated September 1, 2010;
14. Purchase Order 610938 for Greentech Corporation, dated August 11, 2010;