DRAFT COAL ASH IMPOUNDMENT SITE ASSESSMENT REPORT

SUBMITTED TO:

LAKE ROAD GENERATING STATION
KANSAS CITY POWER & LIGHT
ST. JOSEPH, MISSOURI

March 2011

KLEINFELDER

I acknowledge that the management units referenced herein:

- Coal Combustion Byproduct (CCB) Pond System consisting of:
  - Coal Pile Run-off Pool (Northwest Ash Pool)
  - Slag Settling Pool (Northeast Ash Pool)
  - Interim Settling Basin (Southwest Settling Basin)
  - Final Settling Basin (Southeast Settling Basin)

Were assessed on March 2, 2011

Signature: _____ Date: _____

Jeffrey G. Hoffman, P.E.
Lead Geotechnical Engineer

DRAFT

Copyright 2011 Kleinfelder West, Inc.

EXECUTIVE SUMMARY

Background information taken from the U. S. Environmental Protection Agency's (EPA's) website:

> "Following the December 22, 2008 dike failure at the TVA/Kingston, Tennessee coal combustion waste (CCW) ash pond dredging cell that resulted in a spill of over 1 billion gallons of coal ash slurry, covered more than 300 acres and impacted residences and infrastructure, the EPA is embarking on an initiative to prevent the catastrophic failure from occurring at other such facilities located at electric utilities in an effort to protect lives and property from the consequences of a impoundment or impoundment failure of the improper release of impounded slurry."

As part of the EPA's effort to protect lives and the environment from a disaster similar to that experienced in 2008, Kleinfelder was contracted to perform a site assessment at the Lake Road Generating Station that is owned and operated by Kansas City Power & Light (KCP&L). This report summarizes the observations and findings of the site assessment that occurred on March 2, 2011.

The coal combustion waste impoundments observed during the site assessment included:

Coal Combustion Byproduct Pond (CCB) constructed in 1967 and modified in 1977.

- Coal Pile Run-off Pool (Northwest Ash Pool)
- Slag Settling Pool (Northeast Ash Pool)
- Interim Settling Basin (Southwest Settling Basin)
- Final Settling Basin (Southeast Settling Basin)

Preliminary observations made during the site assessment are documented on the Site Assessment Checklists presented in Appendix A. A copy of this checklist was transmitted to the EPA following the field walk-through. A more detailed discussion of the observations is presented in Section 4, "Site Observations."

The Ash Pond impoundment is not regulated by any state agency and therefore does not currently have a designated hazard rating. Failure at this impoundment would likely be contained on KCP&L property and the environmental and economic losses should be low. It is recommended that a Hazard Classification of "Low" be assigned to the impoundment.

DRAFT

Copyright 2010 Kleinfelder West, Inc.

Overall, the site is reasonably well maintained and operated with few areas of concern as discussed in Section 6, “Recommendations.”

On the date of this site assessment, there appeared to be no immediate threat to the safety of the impoundment embankments. No assurance can be made regarding the impoundments condition after this date. Subsequent adverse weather and other factors may affect the condition.

A brief summary of the Priority 1 and 2 Recommendations is given below. A more detailed discussion is provided in Section 6, “Recommendations.”

Priority 1 Recommendations

1. None. The impoundment appeared to be in satisfactory condition.

Priority 2 Recommendations

1. Repair erosion on landside embankment west of the Interim Settling Basin.
2. Perform an internal video inspection of the outlet conduit at least once every five year.
3. Update O&M Manual to provide maximum dredging elevation.
4. Continue to update EAP and O&M Manuals.

DRAFT

Copyright 2011 Kleinfelder West, Inc.

Table of Contents

EXECUTIVE SUMMARY 2

SECTION 1 – INTRODUCTION 6
1.1 General 6
1.2 Project Location 6
1.3 Site Documentation 6

SECTION 2 – SITE ASSESSMENT 8
2.1 Attendees 8
2.2 Impoundments Inspected 8
2.3 Weather During Assessment 8

SECTION 3 – SITE INFORMATION AND HISTORY 9
3.1 Site Information and History 9
3.2 Pertinent Data 11
3.3 Regional Geology and Seismicity 14
3.4 Hydrology and Hydraulics 14
3.5 Geotechnical Considerations 15
3.6 Structural Considerations 15
3.7 Performance Evaluations 16
3.8 Hazard Classification 16
3.9 Site Access 16

SECTION 4 – SITE OBSERVATIONS 17
4.1 CCB Ash Pond 17
4.1.1 Waterside Slope 17
4.1.2 Crest 17
4.1.3 Landside Slope 17
4.1.4 Landside Toe Areas 18
4.1.5 Overflow Pipes 18
4.1.6 Decant Outlet Works 18
4.1.7 Impoundment Inlet 18

SECTION 5 – OVERALL CONDITION OF THE FACILITY IMPOUNDMENTS 19
5.1 Analysis and Conclusions 19
5.2 Summary Statement 21

SECTION 6 – RECOMMENDATIONS 22
6.1 Definitions 22
6.2 Priority 1 Recommendations 22
6.3 Priority 2 Recommendations 22

SECTION 7 – GLOSSARY OF TERMS 23

SECTION 8 – LIMITATIONS 26

SECTION 9 – REFERENCES 28

DRAFT

Copyright 2011 Kleinfelder West, Inc.

List of Plates

Plate 1	Downstream Infrastructure Map
Plate 2	Aerial Site Location Map
Plate 3	Pond Area - Site Features Map
Plate 4	Pond Area - Photograph Location Map

List of Appendices

Appendix A	Site Assessment Checklists
Appendix B	Site Assessment Photographs
Appendix C	Response Letter to the EPA's Section 104(e) Request for Information

DRAFT

Copyright 2011 Kleinfelder West, Inc.

SECTION 1 – INTRODUCTION

1.1 General

This report has been prepared for the United States Environmental Protection Agency (EPA) to document findings and observations from a site assessment at the Lake Road Generating Station on March 2, 2011.

The following sections present a summary of data collection activities, site information, performance history of the facility's impoundments, a summary of site observations and recommendations resulting from the site assessment.

1.2 Project Location

The Lake Road Generating Station is located on the southeast bank of the Missouri River in Buchanan County, Missouri. The station is located on the southwest side of the Town of St Joseph, Missouri at Latitude 39o 43' 23'' N and Longitude 94o 52' 43'' W, as shown in Plate 1. It should be noted that the ash pond is located within the levee critical area (LCA), which is defined by the United States Corp of Engineers as the area within 300 feet and 500 feet of the levee centerline on the wet and dry sides of levee, respectively.

1.3 Site Documentation

Kansas City Power & Light (KCP&L) provided the following documents during the time of this inspection to aid in the review of the impoundments:

- KCP&L GMO Lake Road Generating Station Ponds, Available Information Checklist, Coal Combustion Waste Impoundment (CCWI) Dam, March 2, 2011.
- Request for Information under Section 104(e) of the Comprehensive Environmental Response, Compensation, and Liability Act, 42 U.S.C. 9604(e), July 28, 2009.
- Compaction Testing, Kansas City Testing Laboratory, November 7, 1977.
- Nuclear Gauge Results prepared for Black and Veatch by Kansas City Testing Laboratory, June 12, 1978.
- Missouri State Operating Permit # MO-0004898, June 13, 2003.

DRAFT

Copyright 2011 Kleinfelder West, Inc.

- St Joseph Light and Power Company, Structural Ash Storage Plan and Details, prepared by Black and Veatch, Drawings S1601 and S1602, October 12, 1977.

- Boring Logs, Soil Testing Services of Iowa Inc., February 5, 1975.

- KCP&L Lake Road, Emergency Response Action Plan, February 2011.

- URS, Geotechnical Evaluation Ash Pond – KCP&L Greater Missouri Operations Company, Lake Road Generating Station, dated February 2011.

- State of Missouri, Department of Natural Resources, 2008 Inspection Report, March 7, 2008.

- Google Earth, Lake Road Generating Station Ariel Property Map, 2010.

- United States Geological Survey, Lake Road Generating Station Ariel Property Map.

- Lake Road Generating Station, Coal Combustion Product Storage Ponds, Operation and Maintenance Plan, February 22, 2011.

- Lake Road CCB Pond Freeboard Checklist, February 26, 2011.

- Lake Road CCB Pond Inspection Checklist, February 23, 2011.

- Environmental Protection Agency, Steam Electric Questionnaire, Part D – Pond/Impoundment Systems and other Wastewater Treatment Operations.

All documents were provided in a compact disc (CD) titled Lake Road Generating Station Pond Assessment, dated March 2, 2011

DRAFT

Copyright 2011 Kleinfelder West, Inc.

SECTION 2 – SITE ASSESSMENT

2.1 Attendees

The site assessment was performed on March 2, 2011 by Jeff Hoffman, P.E. and Brad Piede, E.I.T. of Kleinfelder. Other persons present during the site assessment included:

- Paul Ling, PE – KCP&L
- Mark Howell – KCP&L
- Steven Brooks – KCP&L
- Jim Parker – KCP&L
- Charlie Bruce – KCP&L

2.2 Impoundments Inspected

Impoundments and associated structures that were observed during the site assessment included:

Coal Combustion Byproduct (CCB) Ash Pond consisting of:

- Coal Pile Run-off Pool (Northwest Ash Pool)
- Slag Settling Pool (Northeast Ash Pool)
- Interim Settling Basin (Southwest Settling Basin)
- Final Settling Basin (Southeast Settling Basin)

Observations from the site assessment are documented on the Site Assessment Checklists presented in Appendix A. A summary of observations from the site assessment is presented in Section 4.

2.3 Weather During Assessment

During the assessment of the Lake Road Generating Station impoundment, the weather was mostly sunny and temperatures ranged from 30° to 35° F. Wind speed ranged from 10 to 20 miles per hour (mph).

DRAFT

Copyright 2011 Kleinfelder West, Inc.

SECTION 3 – SITE INFORMATION AND HISTORY

3.1 Site Information and History

3.1.1 General

The Lake Road Generating Station is a coal-fired power generating facility. The facility currently sluices slag, residual fly ash, and other materials into the CCB Ash Pond. The CCB Ash Pond is a system of four pools consisting of two ash pools (northeast and northwest) and two settling basins (southeast and southwest). The Slag Settling Pool is the northeast pool and is used to settle slag waste from slurry discharge. The Coal Pile Run-off Pool is to the northwest and is used to detain rainwater run-off from the coal fuel pile, sluiced residual fly ash, and concentrate discharge from reverse osmosis. The Interim Settling Basin, located to the southwest, is gravity fed through a stone filter separator dike from the Coal Pile Run-off Pool. The Final Settling Basin is to the southeast and is gravity fed through stone filter separator dikes from both the Slag Settling Pool and the Interim Settling Basin. The stone filter dikes are equipped with overflow CMPs to pass flow from the Ash Pools to the Settling Basins. Water decants from the Final Settling Basin to the canal south of the CCB Ash Pond and flows west. The canal flows through a culvert under a levee to Brown's Branch Canal, which flows to the Missouri River. Aerial images of the impoundment can be seen in Plates 2 and 3.

The CCB Ash Pond functions as one ash pond separated into four pools; therefore, Kleinfelder only considered the outer embankment of the CCB Ash Pond, disregarding the interior dike between the northeast and northwest pools and the filter dikes between the northern pools and southeast and southwest pools. A failure of the interior dike and filter dikes was initially considered due to the potential risk of water from a higher elevation pool spilling into a lower elevation pool, and exceeding lower elevation pool capacity. However, the stone filter dikes seep water at a high rate and does not allow a significant accumulation of hydrostatic head on one side of a dike. Kleinfelder concluded that failure of the internal dike and filter dikes appears unlikely because the minimal difference in water surface elevations between pools, and stress on the dike should remain low. Further, if a dike failure was to occur, differences in water surface elevations are small relative to available freeboard throughout the CCB Pond. It is assumed that the failure of the interior dikes could disrupt plant operations, but would not have a significant impact on the CCB Pond embankment stability.

3.1.2 Slag Settling Pool

The Slag Settling Pool is a combination incised/diked pool. A sluice pipe transports primarily slag to the northeast of the pool. Slag settles and water is filtered through a 1 ½ to 2-inch clean stone filter dike to the Final Settling Basin at the south end. During high water events a 12-inch CMP overflow pipe accelerates flow to the Final

DRAFT

Copyright 2011 Kleinfelder West, Inc.

Settling Basin. The east embankment is a designed structure and was built adjacent to the Existing Oil Tank Berm on the pond side. The embankment foundation does not have an inspection trench and has a wider crest than other sections. A typical embankment cross-section is shown below in Figure 1. The interior embankment to the west is a separator dike constructed of ash mixed with clay to add stability.

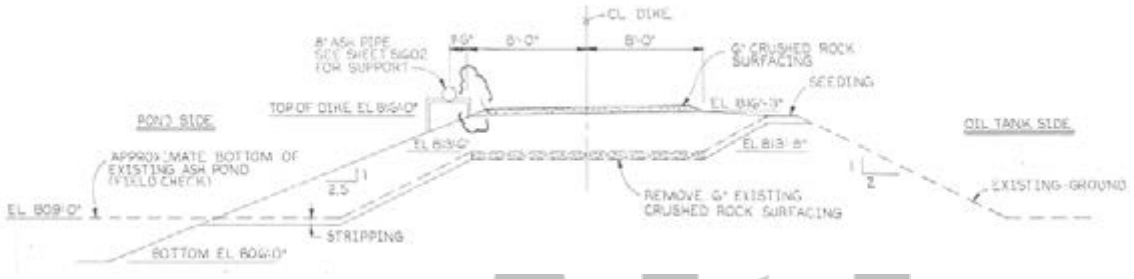

Figure 1 – Typical Embankment Cross-Section of East Embankment, (Black & Veatch, 1977)

DRAFT

3.1.3 Coal Pile Run-off Pool

The Coal Pile Run-off Pool is also a combination incised/diked pool. A sluice pipe transports residual fly ash, sluice water for softening, and concentrate discharge from reverse osmosis to the northeast of the pool. Coal pile run-off water enters through the west embankment. Water is filtered through a 1 ½ to 2-inch clean stone filter dike to the Interim Settling Basin at the south end. A 12-inch CMP overflow pipe accelerates flow to the Final Settling Basin during high water events. The west embankment is a designed embankment with an 8-foot wide inspection trench, a 10-foot crown, and 2.5H:1V slopes .A typical embankment cross-section is shown below in Figure 2.

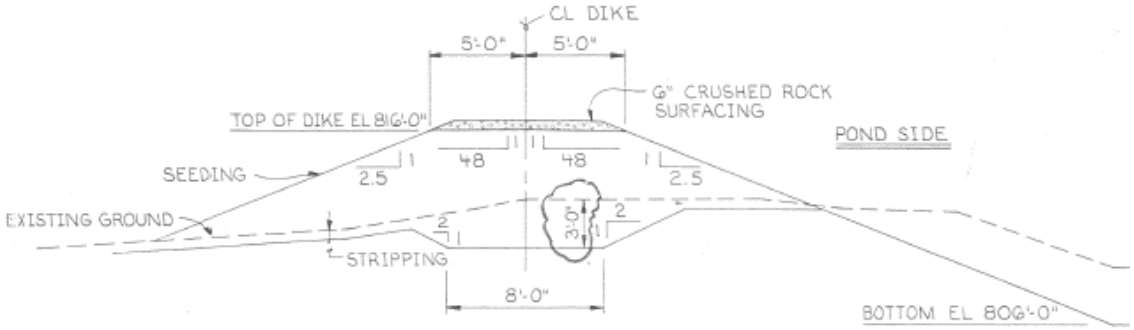

Figure 2 – Typical Embankment Cross-Section of West Embankment, (Black & Veatch, 1977)

Copyright 2011 Kleinfelder West, Inc.

3.1.4 Interim and Final Settling Basin Pool

The Settling Basin is a combination incised/diked pool with a stone filter separator dike between the Interim and Final Settling Basin. Water enters through the stone filter dike from the Ash Pools and exits though the Decant Outlet Works to the southeast. The Decant Outlet Works consists of a 4-foot wide concrete structure with stop-logs that adjust the intake elevation between 806 and 812 feet. The Decant Outlet works flows to a 12-inch RCP conduit which exits at the discharge canal. The landside of the south embankment is part embankment and part excavated canal, and represents the highest section of embankment. The landside of the south embankment (waterside of drainage canal) is reinforced with riprap. The discharge canal flows west and off-site. A typical embankment cross-section is shown below in Figure 3.

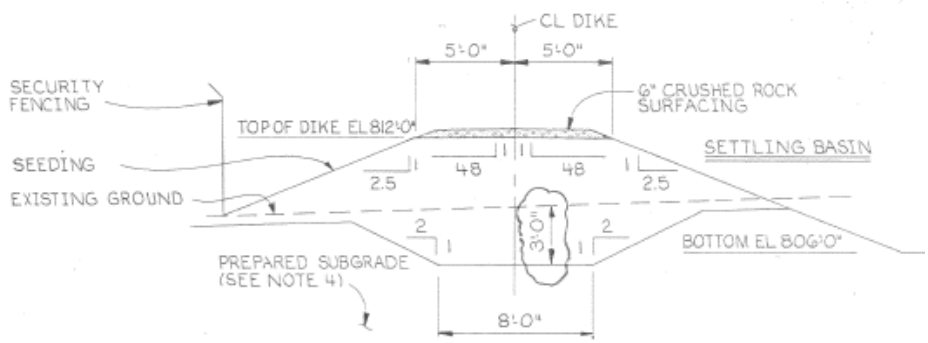

Figure 3 – Typical Embankment Cross-Section of South Embankment, (Black & Veatch, 1977)

4.2 Pertinent Data

Data listed below was primarily gathered from information provided by KCP&L at the time of the site visit. The information includes reports, construction drawings, and spreadsheet documentation. Data not provided by KCP&L was estimated as noted below.

A. GENERAL

1. Name ..... Lake Road Generating Station
2. State ..... Missouri
3. County ..... Buchanan
4. Latitude ..... 39° 43' 23'' North
5. Longitude ..... 94° 52' 43'' West
6. River used for operations ..... Missouri River
7. Year Constructed 1967
8. Modifications ..... North Ash Pool and Settling Basin separator dike, 1977
9. Current Hazard Classification ..... None

Copyright 2011 Kleinfelder West, Inc.

10. Size.....640,862 cubic feet[1]

B. IMPOUNDMENTS

SLAG ASH POOL

1. Type.....Combination Incised/Diked
2. Crest Elevation.....815± feet[1]
3. Crest Length (north and east embankments).....Approx. 460 feet[2]
4. Crest Width.....10 to 16 feet[3]
5. Impoundment Height.....Approx. 9 feet[1]
6. Waterside Slope.....2.5:1 (H:V)[3]
7. Landside Slope.....2.5:1 (H:V)[3,4]
8. Total Solids.....11,000 tons[1]
9. Total Volume of Pool.....14.06 acre-feet[1,5]

COAL PILE RUN-OFF ASH POOL

1. Type.....Combination Incised/Diked
2. Crest Elevation.....815± feet[1]
3. Crest Length (north and west embankments).....Approx. 480 feet[2]
4. Crest Width.....10 feet[3]
5. Impoundment Height.....Approx. 9 feet[1]
6. Waterside Slope.....2.5:1 (H:V)[3]
7. Landside Slope.....2.5:1 (H:V)[3]
8. Total Solids.....3,700 tons[1]
9. Total Volume of Pool.....14.06 acre-feet[1,5]

INTERIM SETTLING BASIN

1. Type.....Combination Incised/Diked
2. Crest Elevation.....812± feet[1]
3. Crest Length (south and west embankments).....Approx. 290 feet[2]
4. Crest Width.....10 feet[3]
5. Impoundment Height.....Approx. 6 feet[1]
6. Waterside Slope.....2.5:1 (H:V)[3]
7. Landside Slope.....2.5:1 (H:V)[3]
8. Total Volume of Pool.....3.13 acre-feet[1,6]

FINAL SETTLING BASIN

1. Type.....Combination Incised/Diked
2. Crest Elevation.....812± feet[1]
3. Crest Length (south and east embankments).....Approx. 200 feet[2]
4. Crest Width.....10 feet[3]
5. Impoundment Height.....Approx. 6 feet[1]
6. Waterside Slope.....2.5:1 (H:V)[3]
7. Landside Slope.....2.5:1 (H:V)[3]
8. Total Volume of Pool.....3.13 acre-feet[1,6]

C. DRAINAGE BASIN

1. Area of Drainage Basin.....Unknown
2. Landside Description:.....City of Atchison and the Missouri River

D. POND INLETS

DRAFT

Copyright 2011 Kleinfelder West, Inc.

SLAG ASH POOL

1. Pool Inlet ..... Sluice pipes from the generating station
2. Inlet Invert Elevation ..... Unknown

COAL PILE RUN-OFF POOL

1. Pool Inlet ..... Sluice pipes from the generating station
2. Inlet Invert Elevation ..... Unknown

B. POND

CCB ASH POND

1. Total Pond Capacity ..... 17.19 acre-feet[7]

C. PRIMARY SPILLWAY

1. Description ..... N/A – No Spillway Present

D. OUTLET WORKS

FINAL SETTLING BASIN

1. Description ..... Concrete inlet structure with adjustable stop-logs and 12" RCP outlet pipe
2. Location ..... Near east side of pool
3. Decant Intake Structure ..... Concrete with adjustable stop-log weir
   a. Intake Invert Elevation ..... 806-812 feet[7]
4. Decant Conduit ..... RCP
   a. Length ..... approximately 75 feet[2]
   b. Diameter ..... 12-inch[3]
5. Outlet Structure ..... Uncontrolled gravity discharge
   a. Outlet Invert Elevation ..... 803.5 feet[3]
   b. Energy Dissipation ..... Canal bottom
6. Discharge Capacity with Water Surface at Top of Impoundment ..... 9.3 cfs[7]

E. MANAGEMENT

1. Owner ..... Kansas City Power & Light
2. Purpose ..... Coal Fired Energy Generation

Notes:
1. Referenced from documentation provided by KCP&L.
2. Information approximated using Google Earth and does not include interior separator dikes.
3. Referenced from the 1977 Black and Veatch Construction drawings.
4. Landside slope adjacent to the Fuel Oil Tank is 2:1 (H:V).
5. Total Volume of Pool value is the combined volume of both the Slag Ash Pool and Coal Run-off Ash Pool according to the URS Geotechnical Report.
6. Total Volume of Pool value is the combined volume of both settling basins according to the URS Geotechnical Report.
7. Referenced from the 2011 URS Geotechnical Evaluation Report.

DRAFT

Copyright 2011 Kleinfelder West, Inc.

3.3 Regional Geology and Seismicity

The plant site is situated in the Dissected Till Plains physiographic area, also known as the Northern Plains. The Dissected Till Plains are gentle plains composed of rock and soil particles left behind from retreating glaciers, which extended approximately as far south as the Missouri River. The area is rolling, with an abundance of streams. Since the last glaciation, the action of stream and river depending and widening of valleys has caused the original plain to become dissected, hence the name Dissected Till Plains.

The Web Soil Survey (http://websoilsruvey.nrcs.usda.gov) developed by the United States Department of Agriculture (USDA) and Natural Resources Conservation Service (NRCS) was reviewed for the area near the plant site. The Urban land, bottomland, soil series is located in the area around the Lake Road Generating Station. This soil series is formed in alluvium located in urban areas, with the alluvium near the plant site deposited by the Missouri River. Near surface alluvial soils generally consist of fine-grained soils, including clay, silt, and sandy silts. The alluvial soils normally become coarser grained with depth, with the soil grading to silty sands to medium to coarse grained sands. Bedrock in the area is anticipated to be at depths greater than 50 feet.

United States Geological Society (USGS) has developed and mapped peak ground accelerations (PGA) having a 2% probability of exceedance in 50 years. Based on Kleinfelder's experience near the plant site and published information, we have assumed a Seismic Site Class "D" with a PGA at the plant site of 0.07 g. This value could vary depending on a site classification defined by a subsurface exploration.

The presence of existing known faults was also evaluated by reviewing posted geologic information on University of Missouri, Center for Applied Research and Environmental Systems (CARES) website (www.cares.missouri.edu). Based on the published information, no known faults were located within 25 miles of the plant site.

3.4 Hydrology and Hydraulics

URS performed a spillway analysis and breach impact analysis for KCP&L in the 2011, Geotechnical Evaluation Report. The URS spillway analysis calculated that the outlet works could not pass the flow of a 25-year, 24-hour rainfall event combined with the average or maximum daily plant flows (22.75 cfs and 25.3 cfs, respectively). However, the CCB Ash Pond "could store the 25-year 24-hour storm with 0.5 feet of freeboard if water levels in the pond are at or below elevation 814.92 feet." URS concluded that "an emergency spillway is not required as long as water levels in the ash ponds are maintained at or below this elevation." The Ash Pond water elevation was observed to be below this level for both the URS and Kleinfelder site visits.

The breach impact analysis URS performed assumed the ash pools and settling basins would release the full capacity of 17.19 acre-feet, and the drainage canal to

Copyright 2011 Kleinfelder West, Inc.

the Missouri River was closed when breach occurred. URS calculated the elevation of the inundation area to be 810.5 feet and concluded the depth of water in the operational areas to "not exceed 1 foot." They showed water to inundate parts of Lake Road to depths of "several inches."

3.5 Geotechnical Considerations

Recent soil boring samples taken by URS in the 2011 Geotechnical evaluation show the embankment is composed of stiff, high plasticity clay. The embankment is founded on a typically soft, low-plasticity silt or silty clay, underlain by a sand or clay layer.

URS analyzed three cross-sections of the embankment for stability using SLOPEW and UTEXAS3 software. Steady-state seepage, steady-state seepage with seismic and rapid drawdown conditions were analyzed and URS concluded the "safety factors are adequate for the current ash pond configuration." Based on interviews conducted during Kleinfelder's site visit, it is our understanding that riprap was added to the landside of the south embankment in 2010 per URS recommendations to reduce mitigate concerns.

No historical seepage has been reported and none was observed at the time of inspection. Owner documentation shows 15.24 cm of compacted clay was used to line the pond and no toe drains or relief wells are present. URS installed two piezometers on-site in 2011 as part of their Geotechnical Evaluation Report, seepage analysis. They concluded that "infiltration through the embankments is slow and limited and that the embankments are effectively controlling seepage." KCP&L is not currently taking readings from the instrumentation. A piezometer on the south embankment is shown on Photograph 18.

3.6 Structural Considerations

The structural components within the Lake Road Generating Station impoundments include corrugated metal pipes (CMPs), reinforce concrete pipes (RCPs), and a concrete decant outlet works structure.

Flow was not seen passing through the overflow pipes between the ash pools and settling basins; however, Kleinfelder understands these pipes were installed in 2011 and appeared to be in good condition. The internal condition of the pipes could not be verified.

The outlet works was passing flow at the time of inspection and appeared to be in satisfactory condition. The internal condition of the outlet conduit was not inspected and records of internal video inspection were not available.

Documentation of the structural portions of the impoundments under seismic loading was not available for our review. The plant site is located in a zone of relatively low risk for damaging seismic activity. Evaluation of the structural

Copyright 2011 Kleinfelder West, Inc.

components of the impoundments under applicable seismic loading conditions merits consideration at the Owners discretion.

3.7 Performance Evaluations

There have been no previous federal or state assessments of the Lake Road Generating Station's CCB Ash Pond. Currently, KCP&L's local plant personnel perform bi-weekly assessments of available freeboard, and the condition of the impoundments and their associated structures. Based on observations by KCP&L in their bi-weekly assessments and other documents and accounts, there have been no major incidents or releases involving the CCB Ash Pond in the last ten years.

3.8 Hazard Classification

The Lake Road Generating Station's impoundment is not regulated by any state agency and therefore do not currently have a designated hazard rating. Potential environmental and economic impacts that a failure of this impoundment would present appears low because an unintended release would mostly be contained on KCP&L property. URS performed a breach impact analysis in the 2011 Geotechnical Evaluation report and estimated less than a foot of water on KCP&L property and several inches on parts of Lake Road. URS assumed the full pond capacity was released instantaneously. Significant economic loss, environmental damage, or disruption of lifeline facilities is not expected in the event of a failure. A loss of life situation is not expected without any homes, recreational facilities, businesses, or other structures immediately downstream of the impoundment. It is recommended a Hazard Classification of "Low" be assigned to the impoundment.

3.9 Site Access

We were required to seek permission from KCP&L to gain access to the plant site. After arriving at the site and meeting with representatives of KCP&L, we were escorted by facility personnel to assess the impoundments. The impoundments can be accessed by standard car or on foot during normal weather conditions via gravel-surfaced roadways on the Lake Road Generating Station property.

DRAFT

Copyright 2011 Kleinfelder West, Inc.

SECTION 4 – SITE OBSERVATIONS

The impoundment embankments, overflow conduits, and decant outlet works of the CCB Ash Pond were observed during the March 2, 2011 site assessment. General observations of these features are presented below; more specific observations of the site and facilities are documented in the Site Assessment Checklists provided in Appendix A. Site observation photographs are shown in Appendix B, and a map showing photograph locations is shown on Plate 4.

4.1 CCB Ash Pond

4.1.1 Waterside Slopes

Overall, the waterside slopes were in satisfactory condition. Photographs 8, 10, 22, and 27 in Appendix B show typical conditions of the waterside slopes. Specific observations include:

- The waterside slopes generally appears as designed, based on visual observations. Inspection occurred while pond was in service so the waterside embankment slopes below the water surface was not observed.
- No large diameter trees, vegetation, or animal burrows were observed in the embankment.

4.1.2 Crest

Overall, the crest of the impoundment was in satisfactory condition. Photograph 6 shows the typical condition of the crest. Specific observations include:

- Most of the crest was a gravel road.
- Almost no grasses were observed on the crest.
- No major depressions or rutting were noted on the impoundment crest.

4.1.3 Landside Slopes

Overall, the landside slopes were in fair condition. Photographs 6, 11, 21, and 23 in Appendix B show typical conditions of the landside slopes. Specific observations include:

- The west embankment of the Interim Settling Basin showed minor erosion.
- Mowed grass was observed along the west and east embankment of the Ash Pond.
- No large diameter trees or animal burrows were observed in the embankment.

DRAFT

Copyright 2011 Kleinfelder West, Inc.

4.1.4 Landside Toe Areas

Overall, the landside toe areas were in satisfactory condition. Photographs 6, 24, and 25 in Appendix B show typical conditions of the landside toe. Specific observations include:

- No large trees or hydrophilic vegetation was observed along the embankment toe.
- No ponding water was observed along the embankment toe, with the exception of a coal pile run-off ditch to the northwest and the drainage canal to the south. Both locations appear intended to contain some water.
- Three utility poles were built near the embankment toe.

4.1.5 Overflow Pipes

The overflow pipes appeared to be in satisfactory condition with no corrosion at the inlet and outlet; however internal condition of the pipes was not verified. A picture of an overflow pipe is shown in Photograph 12.

4.1.6 Decant Outlet Works

The decant outlet works appeared to function properly and was passing water. The structure looked plumb and the concrete was in good condition; however the submerged portion of the intake structure and foundation was not visible. The RCP outlet pipe was passing flow and appeared in satisfactory condition with minor deterioration. The internal condition of the outlet conduit was not inspected. The outlet works can be seen in Photograph 14 of Appendix B.

4.1.7 Impoundment Inlet

Inflow into the CCB Ash Pond includes metal pipes on the North and Northeast side of the impoundment, as well as coal pile run-off that is pumped into the pond from the west. The Inlet pipes can be seen in Photographs 7 and 27 of Appendix B. Specific observations include:

- The Slag Pool Inlet stretched approximately 30 feet into the pond and did not expose the embankment to erosion. Low flow was observed at the time of inspection.
- The Coal Pile Run-off Pool fly ash inlet was riprapped and appeared to be in satisfactory condition. Low flow was observed at the time of inspection.
- The Coal Pile Run-off Pool inlet penetrated the west embankment and appeared in satisfactory condition. High flow was observed at the time of inspection.

DRAFT

Copyright 2011 Kleinfelder West, Inc.

SECTION 5 – OVERALL CONDITION OF THE FACILITY IMPOUNDMENTS

5.1 Analysis and Conclusions

Our analysis is summarized in three general considerations that are presented as follows:

Safety of the Impoundments, Including Maintenance and Methods of Operation

Kleinfelder understands that the impoundments have a history of safe performance. However, the future performance of these impoundments will depend on a variety of factors that may change over time, including surface water hydrology, changes in groundwater levels, changes in embankment slope integrity, etc. In light of this situation, we have noted the following items that present some concern in this regard:

- Erosion and slope steepening was observed on the landside embankment west of Interim Settling Basin. The area is adjacent to a drainage ditch and is likely exposed to more stormwater run-off.
- No internal video inspection of the outlet conduit was available at the time of inspection.

Changes in Design or Operation of the Impoundments Following Initial Construction

The original 1967 construction documents show an Ash Pool to the north and a Settling Basin to the south. Around 1977, a separator dike was constructed to approximately bisect the North Ash Pool and South Settling Basin. The dike runs north and south and separated the North Ash Pool into the Coal Pile Run-off Pool (Northwest Pool) and the Slag Pool (Northeast Pool), and separated the Settling Basin into the Interim Settling Basin (West Settling Basin) and the Final Settling Basin (East Settling Basin.) The ash pool dike was initially constructed from ash and clay was later added to reduce seepage. The settling basin dike was constructed of mostly clayey soil. The separator dike is used for plant operations and is not critical to pond impoundment.

Riprap protection was added to the south embankment of the settling basins in December 2010 to repair and reduce erosion.

DRAFT

Copyright 2011 Kleinfelder West, Inc.

Adequacy of Program for Monitoring Performance of the Impoundments

The present monitoring program primarily involves visual inspections by plant personnel. These visual inspections seem to be adequate to address issues, such as surface erosion and general condition of the impoundments.

DRAFT

Copyright 2011 Kleinfelder West, Inc.

5.2 Summary Statement

I acknowledge that the management unit(s) referenced herein was personally inspected by me and found to be in the following condition:

SATISFACTORY

Signature: _____ Date: _____

Jeffrey G. Hoffman, P.E.
Lead Geotechnical Engineer

DRAFT

Copyright 2011 Kleinfelder West, Inc.

SECTION 6 – RECOMMENDATIONS

6.1 Definitions

Priority 1 Recommendation: Priority 1 Recommendations involve the correction of severe deficiencies where action is required to ensure the structural safety and operational integrity of a facility or that may threaten the safety of the impoundment.

Priority 2 Recommendation: Priority 2 Recommendations are where action is needed or required to prevent or reduce further damage or impaired operation of the facility and/or improve or enhance the O&M of the facility, that do not appear to threaten the safety of the impoundment.

Based on observations during the site assessment, it is recommended that the following actions be taken at the Lake Road Generating Station.

6.2 Priority 1 Recommendations

1. **None.** The impoundment appeared to be in satisfactory condition during inspection and no severe deficiencies were observed that would threaten the safety of the impoundment.

6.3 Priority 2 Recommendations

1. **Repair erosion of landside embankment west of Interim Settling Basin.** Areas where erosion and slope steepening have occurred should be filled in and re-dressed with appropriate fill to prevent erosion from cutting further into the embankments.

2. **Perform an internal video inspection of the outlet conduit a minimum of once every 5 years.** Evaluate the presence of cracks, displacement, or general deterioration of the outlet conduit that could potentially impair functionality of the outlet.

3. **Update O&M Manual to provide maximum dredging elevation.** As noted in Section 1.2, the ash pond is located within the LCA for the Missouri River levee system. As such, dredging operations should be limited to a maximum elevation equal to the original design bottom of pond elevation. If the pond is dredged to greater depths, USACE review and approval would be required.

4. **Periodic updates to O&M and EAP Manuals.** It is recommended that O&M and EAP manuals be revised to include provisions requiring yearly review of documents and updating, as appropriate, with current emergency contact information and up-to-date procedures.

DRAFT

Copyright 2011 Kleinfelder West, Inc.

SECTION 7 – GLOSSARY OF TERMS

For the EPA Ash Pond Assessment program, the following glossary of terms shall be used for classification unless otherwise noted.

Hazard Potential Rating

"Hazard Potential" means the possible adverse incremental consequences that result from the release of water or stored contents due to the failure of the impoundment or reservoir or the misoperation of the impoundment, reservoir, or appurtenances. The Hazard Potential Classification of an impoundment or reservoir shall not reflect in any way on the current condition of the impoundment or reservoir and its appurtenant works, including the impoundment's or reservoir's safety, structural integrity, or flood routing capacity. These classifications are as described below:

1. **Less than Low Hazard Potential**

   "Less than Low Hazard" means failure or misoperation of the dam results in no probable loss of human life or economic or environmental losses.

2. **Low Hazard Potential**

   "Low Hazard" means an impoundment's or reservoir's failure will result in no probable loss of human life and low economic loss or environmental loss, or both. Economic losses are principally limited to the owner's property.

3. **Significant Hazard Potential**

   "Significant Hazard" means a impoundment's or reservoir's failure will result in no probable loss of human life but can cause major economic loss, environmental damage, disruption of lifeline facilities, or impact other concerns. Significant Hazard Potential classification impoundments or reservoirs are often located in predominantly rural or agricultural areas but could be located in areas with population and significant infrastructure.

4. **High Hazard Potential**

   "High Hazard" means a impoundment's or reservoir's failure will result in probable loss of human life.

Overall Classification of Impoundment

In a system similar to the New Jersey Department of Environmental Protection Impoundment Safety Guidelines for the Inspection of Existing Impoundments

DRAFT

Copyright 2011 Kleinfelder West, Inc.

(January 2008), when the following terms are capitalized, they denote and shall be used to describe the overall classification of the impoundment as follows:

SATISFACTORY - No existing or potential impoundment safety deficiencies are recognized. Acceptable performance is expected (the term expected is to be defined as likely) under all applicable loading conditions (static, hydrologic and seismic) in accordance with the applicable criteria. Minor maintenance items may be required.

FAIR – Acceptable performance is expected (the term expected is to be defined as likely) under all required loading conditions (static, hydrologic and seismic) in accordance with the applicable safety regulatory criteria. Minor deficiencies may exist that require remedial action and/or secondary studies or investigations.

POOR - A management unit safety deficiency is recognized for any required loading condition (static, hydrologic and seismic) in accordance with the applicable impoundment safety regulatory criteria. Remedial action is necessary. POOR also applies when further critical studies or investigations are needed to identify any potential impoundment safety deficiencies.

UNSATISFACTORY – The facility is considered unsafe. An impoundment safety deficiency is recognized that requires immediate or emergency remedial action for problem resolution. Reservoir restrictions may be necessary.

DRAFT

Condition Rating Criteria

In a system similar to the U.S. Department of Interior, Safety Evaluation of Existing Impoundments (SEED 1995), the terms "Satisfactory," "Fair," "Poor," and "Unsatisfactory" are used in a general sense when describing the structural condition and the operational adequacy of the equipment for a impoundment or reservoir and its appurtenant works during the visual assessment. In addition, the term "Unknown" may be utilized, as applicable.

Satisfactory – Expected to fulfill intended function.

Fair – Expected to fulfill intended function, but maintenance or other actions are recommended.

Poor – May not fulfill intended function; maintenance, repairs, or other actions are necessary.

Unsatisfactory – Is not expected to fulfill intended function; repair, replacement, or modification is necessary.

Unknown – Not visible, not accessible, not inspected, or unable to determine the condition rating based on the observation taken.

Copyright 2011 Kleinfelder West, Inc.

Recommendation Listing

Recommendations shall be written concisely and identify the specific actions to be taken. The first word in the recommendation should be an action word (i.e. "Prepare", "Perform", or "Submit"). The recommendations shall be prioritized and numbered to provide easy reference. Impoundment Safety Recommendations shall be grouped, listed or categorized similar to the U.S. Department of Interior, Reclamation Manual - Directives and Standards - Review/Examination Program for High- and Significant-Hazard Impoundments (July, 1998 FAC 01-07) as follows:

Priority 1 Recommendations: Priority 1 Recommendations involve the correction of severe deficiencies where action is required to ensure the structural safety and operational integrity of a facility or that may threaten the safety of the impoundment.

Priority 2 Recommendations: Priority 2 Recommendations are where action is needed or required to prevent or reduce further damage or impaired operation of the facility and/or improve or enhance the O&M of the facility, which do not appear to threaten the safety of the impoundment.

DRAFT

Copyright 2011 Kleinfelder West, Inc.

SECTION 8 – LIMITATIONS

The scope of this work is for a preliminary screening for the EPA and plant owner/operator of the visible performance and apparent stability of the impoundment embankments based only on the observable surface features and information provided by the owner/operator. Other features below the ground surface may exist or may be obscured by vegetation, water, debris, or other features that could not be identified and reported. This site assessment and report were performed without the benefit of any soil drilling, sampling, or testing of the subsurface materials, calculations of capacities, quantities, or stability, or any other engineering analyses. The purpose of this assessment is to provide information to the EPA and the plant owner/operator about recommended actions and/or studies that need to be performed to document the stability and safety of the impoundments.

This work was performed by qualified personnel in a manner consistent with that level of care and skill ordinarily exercised by other members of Kleinfelder's profession, practicing in the same locality, under similar conditions, and at the date the services are provided. Kleinfelder's conclusions, opinions, and recommendations are based on a limited number of observations. It is possible that conditions could vary between or beyond the observations made. Kleinfelder makes no other representation, guarantee, or warranty, express or implied, regarding the services, communication (oral or written), report, opinion, or instrument of service provided. Kleinfelder makes no warranty or guaranty of future embankment stability or safety.

This report may be used only by the client and the registered design professional in responsible charge and only for the purposes stated for this specific engagement within a reasonable time from its issuance but in no event later than one (1) year from the date of the report.

The information, included on graphic representations in this report, has been compiled from a variety of sources and is subject to change without notice. Kleinfelder makes no representations or warranties, expressed or implied, as to accuracy, completeness, timeliness, or rights to the use of such information. These documents are not intended for use as a land survey product nor are they designed or intended as a construction design document. The use or misuse of the information contained on these graphic representations is at the sole risk of the party using or misusing the information.

Recommendations contained in this report are based on preliminary field observations without the benefit of subsurface explorations, laboratory tests, or detailed knowledge of the existing construction. If the scope of the proposed recommendations changes from that described in this report, the conclusions and recommendations contained in this report are not considered valid unless the changes are reviewed and the conclusions of this report are modified or approved in

DRAFT

Copyright 2011 Kleinfelder West, Inc.

writing by Kleinfelder. Kleinfelder cannot be responsible for interpretation by others of this report or the conditions encountered in the field.

DRAFT

Copyright 2011 Kleinfelder West, Inc.

SECTION 9 – REFERENCES

- Google Inc. (2011). Google Earth Pro (Version 6.0.2.2074) [Software]. Available from http://www.google.com/earth/index.html.

- KCP&L Lake Road Generating Station Pond Assessment (CD), March 2, 2011.

- Missouri Center for Applied Research and Environmental Systems (CARES), Missouri Soil Survey, 2011.

- New Jersey Department of Environmental Protection, Impoundment Safety Guidelines for the Inspection of Existing Impoundments, January 2008.

- URS, Geotechnical Evaluation Ash Pond – KCP&L Greater Missouri Operations Company, Lake Road Generating Station, dated February 2011.

- US Department of Agriculture (USDA), Natural Resources Conservation Service (NRCS), Web Soil Survey – online.

- US Department of Interior, Reclamation Manual – Directives and Standards – Review/Examination Program for High and Significant Hazard Impoundments, July 1998.

- US Department of the Interior, Safety and Evaluation of Existing Impoundments (SEED), 1995.

- US Geologic Survey (USGS) "Design Maps" Detailed Report, 2009 NEHRP Recommended Seismic Provisions, Section 11.4.1 – Mapped Acceleration Parameters and Risk Coefficients, March 15, 2011.

DRAFT

Copyright 2011 Kleinfelder West, Inc.

Plates

Plate 1	Downstream Infrastructure Map
Plate 2	Aerial Site Location Map
Plate 3	Pond Area - Site Features Map
Plate 4	Pond Area - Photograph Location Map

DRAFT

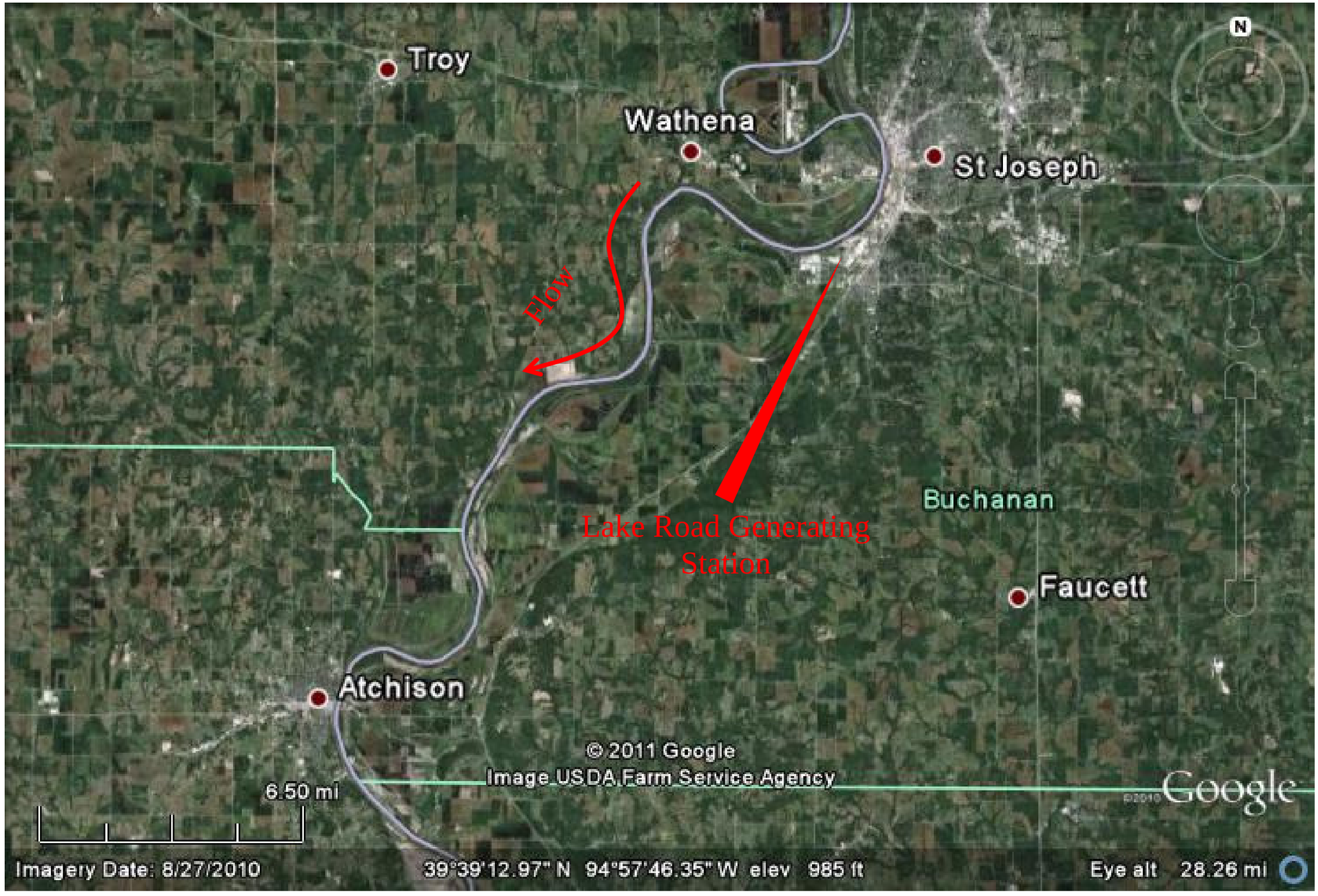

N

The information included on this graphic representation has been compiled from a variety of sources and is subject to change without notice. Kleinfelder makes no representations or warranties, express or implied, as to accuracy, completeness, timeliness, or rights to the use of such information. This document is not intended for use as a land survey product nor is it designed or intended as a construction design document. The use or misuse of the information contained on this graphic representation is at the sole risk of the party using or missusing the information.

KLEINFELDER
Bright People. Right Solutions.
www.kleinfelder.com

PROJECT NO.	116664-2
DATE:	3-18-11
DRAWN BY:	B. Piede
CHECKED BY:	J. Hoffman
FILE NAME:	Lake Road Plates

DOWNSTREAM INFRASTRUCTURE MAP

LAKE ROAD GENERATING STATON
KANSAS CITY POWER & LIGHT
ST. JOSEPH, MISSOURI

PLATE

1

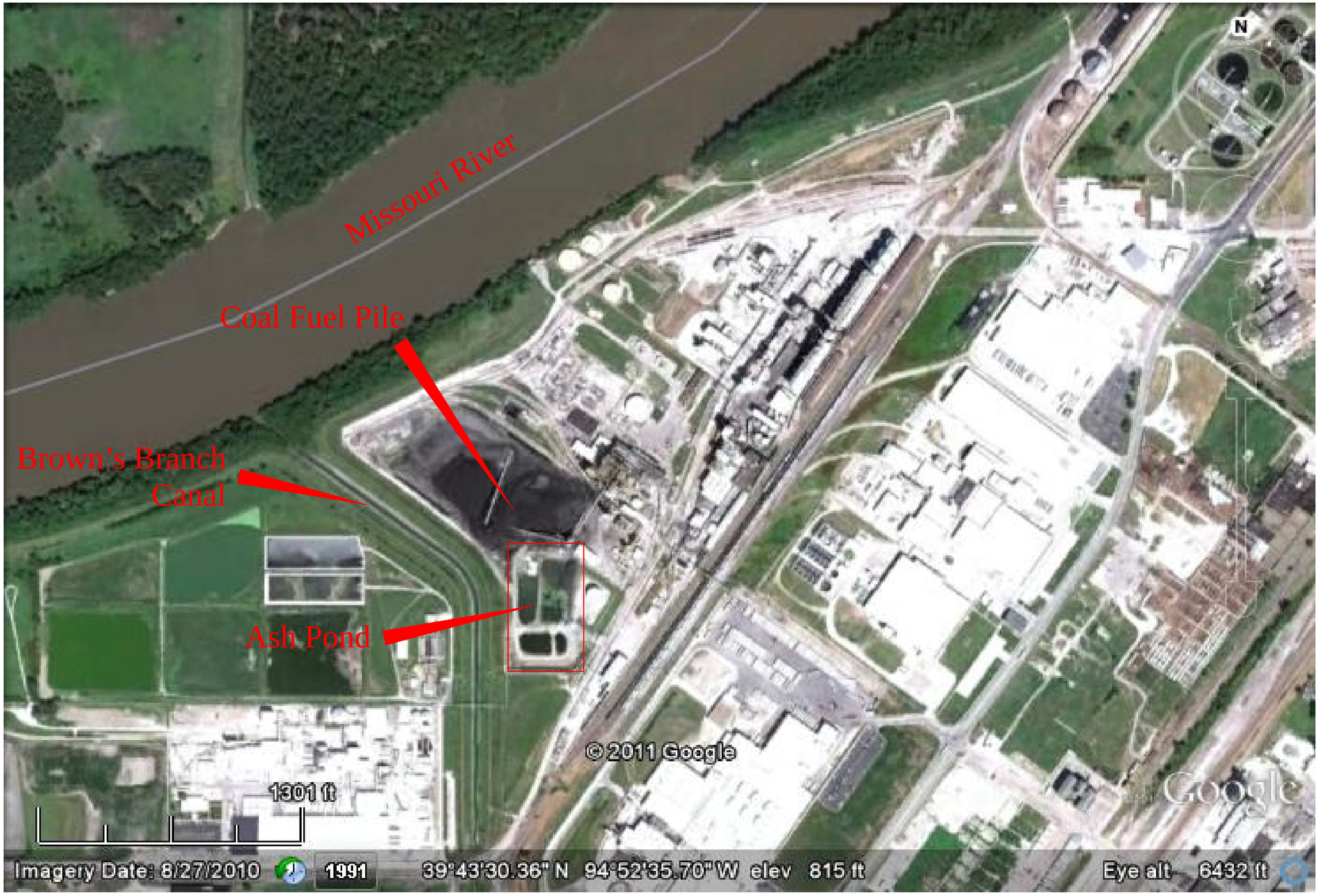

N

The information included on this graphic representation has been compiled from a variety of sources and is subject to change without notice. Kleinfelder makes no representations or warranties, express or implied, as to accuracy, completeness, timeliness, or rights to the use of such information. This document is not intended for use as a land survey product nor is it designed or intended as a construction design document. The use or misuse of the information contained on this graphic representation is at the sole risk of the party using or misusing the information.

KLEINFELDER
Bright People. Right Solutions.
www.kleinfelder.com

PROJECT NO.	116664-2
DATE:	3-18-11
DRAWN BY:	B. Piede
CHECKED BY:	J. Hoffman
FILE NAME:	Lake Road Plates

AERIAL SITE LOCATION MAP

LAKE ROAD GENERATING STATON
KANSAS CITY POWER & LIGHT
ST. JOSEPH, MISSOURI

PLATE

2

The information included on this graphic representation has been compiled from a variety of sources and is subject to change without notice. Kleinfelder makes no representations or warranties, express or implied, as to accuracy, completeness, timeliness, or rights to the use of such information. This document is not intended for use as a land survey product nor is it designed or intended as a construction design document. The use or misuse of the information contained on this graphic representation is at the sole risk of the party using or misusing the information.

KLEINFELDER
Bright People. Right Solutions.
www.kleinfelder.com

PROJECT NO.	116664-2
DATE:	3-18-11
DRAWN BY:	B. Piede
CHECKED BY:	J. Hoffman
FILE NAME:	Lake Road Plates

POND AREA—SITE FEATURES MAP

LAKE ROAD GENERATING STATON
KANSAS CITY POWER & LIGHT
ST. JOSEPH, MISSOURI

PLATE
3

N

Legend:

12 - Photo number, location, and direction

Note: Photographs 1 through 5 were taken at the power generating plant northeast of the ash pond. Locations not shown.

The information included on this graphic representation has been compiled from a variety of sources and is subject to change without notice. Kleinfelder makes no representations or warranties, express or implied, as to accuracy, completeness, timeliness, or rights to the use of such information. This document is not intended for use as a land survey product nor is it designed or intended as a construction design document. The use or misuse of the information contained on this graphic representation is at the sole risk of the party using or missusing the information.

KLEINFELDER
Bright People. Right Solutions.
www.kleinfelder.com

PROJECT NO.	116664-2
DATE:	3-18-11
DRAWN BY:	B. Piede
CHECKED BY:	J. Hoffman
FILE NAME:	Lake Road Plates

POND AREA—PHOTOGRAPH LOCATION MAP

LAKE ROAD GENERATING STATON
KANSAS CITY POWER & LIGHT
ST. JOSEPH, MISSOURI

PLATE

4

Appendix A

Site Assessment Checklists

Coal Combustion Dam Inspection Checklist Form

US Environmental Protection Agency

Site Name:	Lake Road Generating Station	Date:	03/02/11
Unit Name:	Slag/Coal Pile Run-off Pond	Operator's Name:	Kansas City Power & Light
Unit I.D.:	N/A	Hazard Potential Classification:	High Significant Low ✓

Inspector's Name: Jeff Hoffman, Brad Piede

Check the appropriate box below. Provide comments when appropriate. If not applicable or not available, record "N/A". Any unusual conditions or construction practices that should be noted in the comments section. For large diked embankments, separate checklists may be used for different embankment areas. If separate forms are used, identify approximate area that the form applies to in comments.

	Yes	No		Yes	No
1. Frequency of Company's Dam Inspections?	Bi-Weekly		18. Sloughing or bulging on slopes?		✓
2. Pool elevation (operator records)?	812.0		19. Major erosion or slope deterioration?		✓
3. Decant inlet elevation (operator records)?			20. Decant Pipes:		
4. Open channel spillway elevation (operator records)?	N/A		Is water entering inlet, but not exiting outlet?		✓
5. Lowest dam crest elevation (operator records)?	812.0		Is water exiting outlet, but not entering inlet?		✓
6. If instrumentation is present, are readings recorded (operator records)?		✓	Is water exiting outlet flowing clear?	✓	
7. Is the embankment currently under construction?		✓	21. Seepage (specify location, if seepage carries fines, and approximate seepage rate below).		
8. Foundation preparation (remove vegetation,stumps, topsoil in area where embankment fill will be placed)?	✓		From underdrain?		N/A
9. Trees growing on embankment? (If so, indicate largest diameter below)		✓	At isolated points on embankment slopes?		✓
10. Cracks or scarps on crest?		✓	At natural hillside in the embankment area?		✓
11. Is there significant settlement along the crest?		✓	Over widespread areas?		✓
12. Are decant trashracks clear and in place?		N/A	From downstream foundation area?		✓
13. Depressions or sinkholes in tailings surface or whirlpool in the pool area?		✓	"Boils" beneath stream or ponded water?		✓
14. Clogged spillways, groin or diversion ditches?		✓	Around the outside of the decant pipe?		✓
15. Are spillway or ditch linings deteriorated?		N/A	22. Surface movements in valley bottom or on hillside?		✓
16. Are outlets of decant or underdrains blocked?		✓	23. Water against downstream toe?	✓	
17. Cracks or scarps on slopes?		✓	24. Were Photos taken during the dam inspection?	✓	

Major adverse changes in these items could cause instability and should be reported for further evaluation. Adverse conditions noted in these items should normally be described (extent, location, volume, etc.) in the space below and on the back of this sheet.

Inspection Issue #	Comments
2.	Operator records show approximate pool elevation between 811 - 813 feet.
5.	Indicates lowest elevation at the sedimentation basins. North Ash Pond (East and West) indicate a low elevation of approx 816 feet.
12.	No trashracks present.
19.	Some minor erosion on landside.
23.	Downstream toe of south embankments is used as a drainage ditch and usually contains flowing water.

U. S. Environmental Protection Agency

Coal Combustion Waste (CCW) Impoundment Inspection

Impoundment NPDES Permit # MO-0004898 INSPECTOR Kleinfelder

Date 3/2/11

Impoundment Name Lake Road Generating Station

Impoundment Company Kansas City Power & Light

EPA Region 7

State Agency (Field Office) Addresss 500 Northeast Colbern Rd.
Lee's Summit, MO 64086

Name of Impoundment Coal Combustion By-product Ponds (coal pile run-off / slag settling / sedimentation basin)

(Report each impoundment on a separate form under the same Impoundment NPDES Permit number)

New _____ Update X

	Yes	No
Is impoundment currently under construction?		X
Is water or ccw currently being pumped into the impoundment?	X	

IMPOUNDMENT FUNCTION: Boiler Slag / Coal Pile Run-off Temporary Storage

Nearest Downstream Town : Name Atchison, MO

Distance from the impoundment 23 miles

Impoundment Location:

Longitude 94 Degrees 52 Minutes 43 Seconds

Latitude 39 Degrees 43 Minutes 22 Seconds

State MO County Buchanan

Does a state agency regulate this impoundment? YES _____ NO X

If So Which State Agency? _____

HAZARD POTENTIAL (In the event the impoundment should fail, the following would occur):

_____ **LESS THAN LOW HAZARD POTENTIAL:** Failure or misoperation of the dam results in no probable loss of human life or economic or environmental losses.

__x__ **LOW HAZARD POTENTIAL:** Dams assigned the low hazard potential classification are those where failure or misoperation results in no probable loss of human life and low economic and/or environmental losses. Losses are principally limited to the owner's property.

_____ **SIGNIFICANT HAZARD POTENTIAL:** Dams assigned the significant hazard potential classification are those dams where failure or misoperation results in no probable loss of human life but can cause economic loss, environmental damage, disruption of lifeline facilities, or can impact other concerns. Significant hazard potential classification dams are often located in predominantly rural or agricultural areas but could be located in areas with population and significant infrastructure.

_____ **HIGH HAZARD POTENTIAL:** Dams assigned the high hazard potential classification are those where failure or misoperation will probably cause loss of human life.

DESCRIBE REASONING FOR HAZARD RATING CHOSEN:

- Potential inundation area was analyzed by URS in the the February 2011 Geotechnical Evaluation Report and most of the flooded area would remain on KCP&L property, with some water reaching Lake Road. Report shows "depth of water in the operational areas of the facility will not exceed a foot."
- Loss of human life is not anticipated since inundated area is mostly on KCP&L property.
- A Slide gate at the discharge under the levee can stop contaminated flow to the canal and river.

CONFIGURATION:

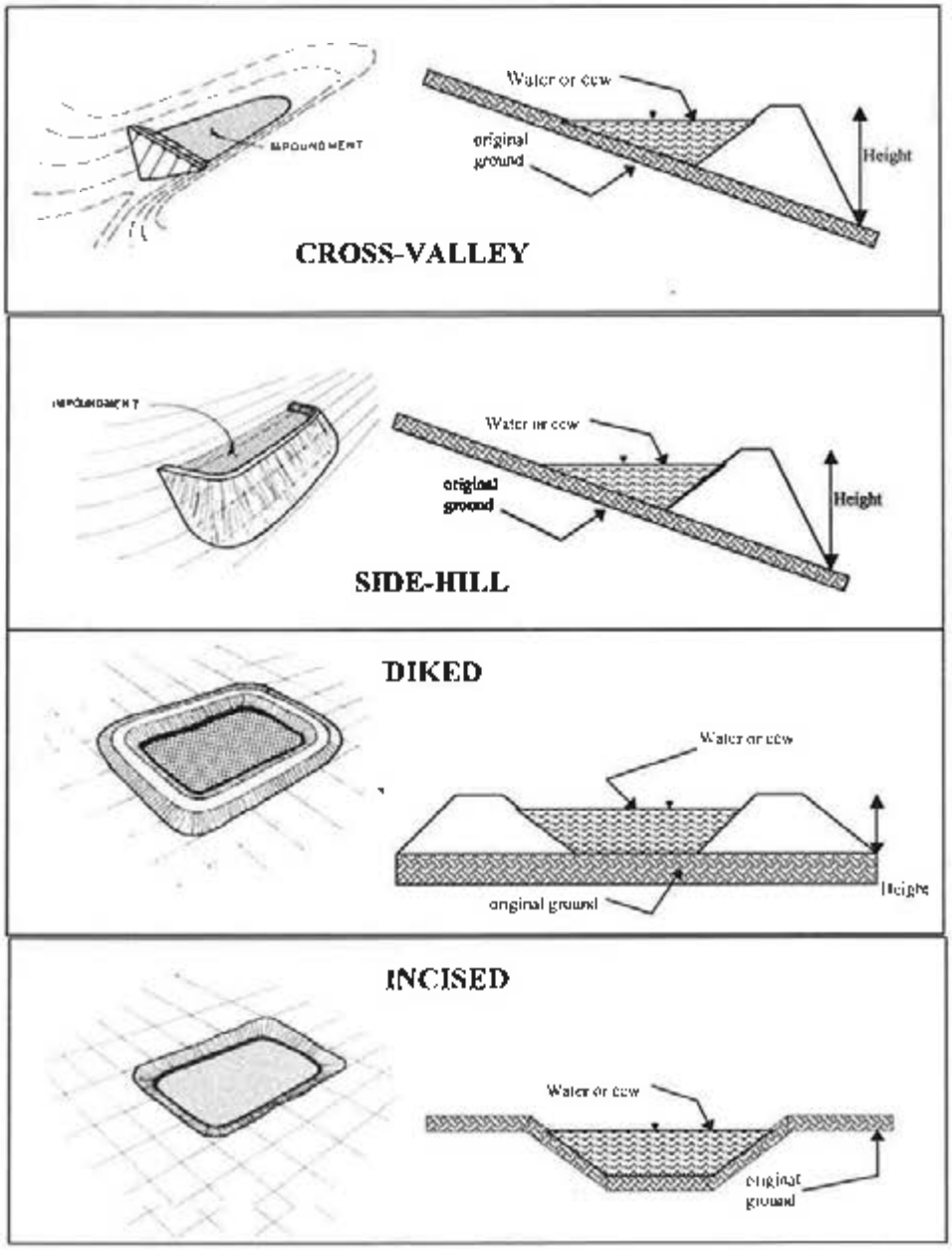

_____ Cross-Valley
_____ Side-Hill
_____ Diked
_____ Incised (form completion optional)
__X__ Combination Incised/Diked

Embankment Height 10 feet Embankment Material Earth Fill
Pool Area 1.8 acres Liner N/A
Current Freeboard 1-3 feet Liner Permeability N/A

TYPE OF OUTLET (Mark all that apply)

_____ **Open Channel Spillway**
_____ Trapezoidal
_____ Triangular
_____ Rectangular
_____ Irregular

_____ depth
_____ bottom (or average) width
_____ top width

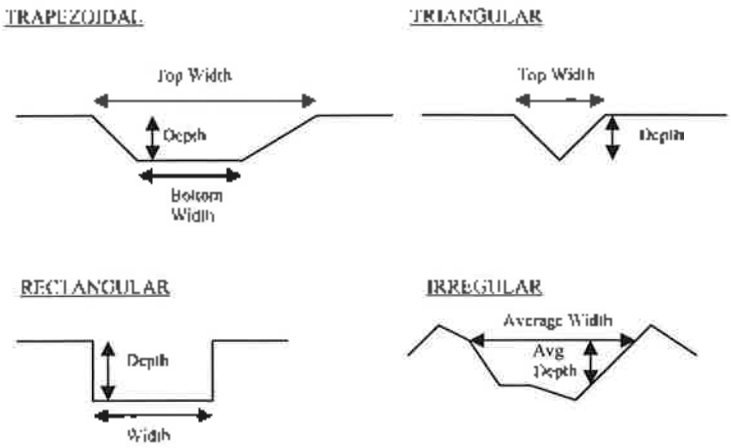

_____ **Outlet**

12" inside diameter

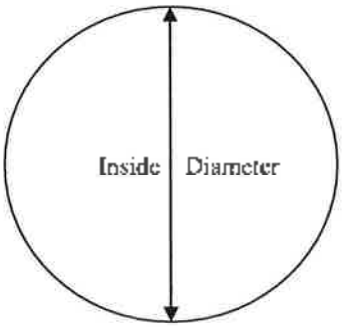

Material
_____ corrugated metal
_____ welded steel
x concrete
_____ plastic (hdpe, pvc, etc.)
_____ other (specify) _____

Is water flowing through the outlet? YES x NO _____

_____ **No Outlet**

_____ **Other Type of Outlet** (specify) _____

The Impoundment was Designed By _____
_____

Has there ever been a failure at this site? YES _____ NO ___x_____

If So When? _____

If So Please Describe : _____

Has there ever been significant seepages at this site? YES _____ NO _x_

If So When? _____

IF So Please Describe: _____

Has there ever been any measures undertaken to monitor/lower Phreatic water table levels based on past seepages or breaches at this site? YES _____ NO x

If so, which method (e.g., piezometers, gw pumping,...)? _____

If so Please Describe : _____

Additional questions To Ask While conducting Coal Ash Site assessments

The purpose of the following questions is to identify each part of the equipment sequence that handles fly ash, bottom ash, boiler slag, and Flue gas desulfurization sludges from the point of generation to the CCR impoundments or into "dry" disposal.

Ask the same 4 questions for fly ash, bottom ash, boiler slag, Flue gas desulfurization sludge:

FLY ASH

1. Exactly how is it generated at the boiler? Describe equipment used to initially collect it (steel box, etc).

   Coal is burned with fly ash collected on electrostatic precipitators which then drop the ash into a steel hopper.

2. How is it moved from point of generation to storage? Describe each piece of equipment used to move it. Does this equipment have containment?

   From the hopper, the fly ash is pneumatically moved through pipes to a fly ash silo. There is no containment equipment between the hopper and silos.

3. Describe the type of equipment is used to store it. Describe the engineering characteristics of each of these storage units (silos, tanks, size, construction type (steel). Does this equipment have containment?

   The fly ash is then stored in an approximately 25 foot diameter, 50-foot tall, metal silo.

4. How is it moved from storage to final disposal? Describe each piece of equipment Does this equipment have containment?

   The fly ash is used for beneficial purposes and hauled off-site through the use of tanker trucks. The ash is transferred from the silos to the tankers through a pipe at the bottom of the silo.

Bottom Ash

5. Exactly how is it generated at the boiler? Describe equipment used to initially collect it (steel box, etc).

   Coal is burned and the ash falls into a steel hopper.

6. How is it moved from point of generation to storage? Describe each piece of equipment used to move it. Does this equipment have containment?

   The bottom ash is then pneumatically moved from the hopper to a steel silo. There is no containment between the hopper and silo.

7. Describe the type of equipment is used to store it. Describe the engineering characteristics of each of these storage units (silos, tanks, size, construction type (steel). Does this equipment have containment?

   The steel silo is approximately 25 feet in diameter and 30 feet tall. The ash is contained in the silo until hauled off-site by dump truck.

8. How is it moved from storage to final disposal? Describe each piece of equipment Does this equipment have containment?

   Covered dump trucks remove bottom ash from the silo, with the ash transferred to the dump truck using a pipe at the bottom of the silo. The bottom ash is then hauled off-site for beneficial use.

Boiler Slag

9. Exactly how is it generated at the boiler? Describe equipment used to initially collect it (steel box, etc).

   Coal burned, with slag falling from the cyclone into a metal quenching tank.

10. How is it moved from point of generation to storage? Describe each piece of equipment used to move it. Does this equipment have containment?

    The slag is then sluiced and transferred by pipe to the ash pond. There is no storage/containment between the tank and ash pond.

11. Describe the type of equipment is used to store it. Describe the engineering characteristics of each of these storage units (silos, tanks, size, construction type (steel). Does this equipment have containment?

    Once transferred to the ash pond, the slag settles out as water flows from inlet to outlet. The slag is typically dredged 1 to 2 times a month.

12. How is it moved from storage to final disposal? Describe each piece of equipment Does this equipment have containment?

    The slag is dredged and hauled off-site by covered dump truck.

Flue Gas Desulfurization Sludge – NO FGD SLUDGE

13. Exactly how is it generated at the boiler? Describe equipment used to initially collect it (steel box, etc).

N/A

14. How is it moved from point of generation to storage? Describe each piece of equipment used to move it. Does this equipment have containment?

N/A

15. Describe the type of equipment is used to store it. Describe the engineering characteristics of each of these storage units (silos, tanks, size, construction type (steel). Does this equipment have containment?

N/A

16. How is it moved from storage to final disposal? Describe each piece of equipment Does this equipment have containment?

    N/A

Appendix B

Site Assessment Photographs

1-Bottom Ash Silo (Hauled Off-site)

2-Bottom Ash Silo Outlet

The information included on this graphic representation has been compiled from a variety of sources and is subject to change without notice. Kleinfelder makes no representations or warranties, express or implied, as to accuracy, completeness, timeliness, or rights to the use of such information. This document is not intended for use as a land survey product nor is it designed or intended as a construction design document. The use or misuse of the information contained on this graphic representation is at the sole risk of the party using or misusing the information.

KLEINFELDER
Bright People. Right Solutions.
www.kleinfelder.com

PROJECT NO.	116664-2
DRAWN:	3/15/11
DRAWN BY:	B. PIEDE
CHECKED BY:	J. HOFFMAN
FILE NAME: LAKE ROAD SITE PHOTOS	

APPENDIX B—SITE PHOTOGRAPHS 3/2/2011

LAKE ROAD GENERATIONG STATION
KANSAS CITY POWER & LIGHT
ST. JOSEPH, MISSOURI

FIGURE
1

3-Fly Ash Pneumatic Pipe

4-Fly Ash Silo

The information included on this graphic representation has been compiled from a variety of sources and is subject to change without notice. Kleinfelder makes no representations or warranties, express or implied, as to accuracy, completeness, timeliness, or rights to the use of such information. This document is not intended for use as a land survey product nor is it designed or intended as a construction design document. The use or misuse of the information contained on this graphic representation is at the sole risk of the party using or misusing the information.

KLEINFELDER
Bright People. Right Solutions.
www.kleinfelder.com

PROJECT NO.	116664-2
DRAWN:	3/15/11
DRAWN BY:	B. PIEDE
CHECKED BY:	J. HOFFMAN
FILE NAME:	LAKE ROAD SITE PHOTOS

APPENDIX B—SITE PHOTOGRAPHS 3/2/2011

LAKE ROAD GENERATIONG STATION
KANSAS CITY POWER & LIGHT
ST. JOSEPH, MISSOURI

FIGURE
2

5-Slag Sluice Pipe to Pond Looking West

6-Landside East Embankment of Slag Pool (East Pool) Looking South

The information included on this graphic representation has been compiled from a variety of sources and is subject to change without notice. Kleinfelder makes no representations or warranties, express or implied, as to accuracy, completeness, timeliness, or rights to the use of such information. This document is not intended for use as a land survey product nor is it designed or intended as a construction design document. The use or misuse of the information contained on this graphic representation is at the sole risk of the party using or misusing the information.

KLEINFELDER
Bright People. Right Solutions.
www.kleinfelder.com

PROJECT NO.	116664-2
DRAWN:	3/15/11
DRAWN BY:	B. PIEDE
CHECKED BY:	J. HOFFMAN
FILE NAME:	LAKE ROAD SITE PHOTOS

APPENDIX B—SITE PHOTOGRAPHS 3/2/2011

LAKE ROAD GENERATIONG STATION
KANSAS CITY POWER & LIGHT
ST. JOSEPH, MISSOURI

FIGURE
3

7-Slag Inlet Sluice Pipe looking Northeast

8-Waterside East Embankment of Slag Pool (East Pool) Looking South

The information included on this graphic representation has been compiled from a variety of sources and is subject to change without notice. Kleinfelder makes no representations or warranties, express or implied, as to accuracy, completeness, timeliness, or rights to the use of such information. This document is not intended for use as a land survey product nor is it designed or intended as a construction design document. The use or misuse of the information contained on this graphic representation is at the sole risk of the party using or misusing the information.

KLEINFELDER
Bright People. Right Solutions.
www.kleinfelder.com

PROJECT NO.	116664-2
DRAWN:	3/15/11
DRAWN BY:	B. PIEDE
CHECKED BY:	J. HOFFMAN
FILE NAME:	LAKE ROAD SITE PHOTOS

APPENDIX B—SITE PHOTOGRAPHS 3/2/2011

LAKE ROAD GENERATIONG STATION
KANSAS CITY POWER & LIGHT
ST. JOSEPH, MISSOURI

FIGURE
4

9-Slag Pool Looking Southwest

10-Fly Ash Sluice Pipe to Coal Pile Run-off Pool on North Embankment

The information included on this graphic representation has been compiled from a variety of sources and is subject to change without notice. Kleinfelder makes no representations or warranties, express or implied, as to accuracy, completeness, timeliness, or rights to the use of such information. This document is not intended for use as a land survey product nor is it designed or intended as a construction design document. The use or misuse of the information contained on this graphic representation is at the sole risk of the party using or misusing the information.

KLEINFELDER
Bright People. Right Solutions.
www.kleinfelder.com

PROJECT NO.	116664-2
DRAWN:	3/15/11
DRAWN BY:	B. PIEDE
CHECKED BY:	J. HOFFMAN
FILE NAME:	LAKE ROAD SITE PHOTOS

APPENDIX B—SITE PHOTOGRAPHS 3/2/2011

LAKE ROAD GENERATIONG STATION
KANSAS CITY POWER & LIGHT
ST. JOSEPH, MISSOURI

FIGURE
5

11-Crown and Landside of Slag Pool East Embankment Looking South

12-Stone Filter Outlet and Overflow Pipe at South End of Slag Pool

The information included on this graphic representation has been compiled from a variety of sources and is subject to change without notice. Kleinfelder makes no representations or warranties, express or implied, as to accuracy, completeness, timeliness, or rights to the use of such information. This document is not intended for use as a land survey product nor is it designed or intended as a construction design document. The use or misuse of the information contained on this graphic representation is at the sole risk of the party using or misusing the information.

KLEINFELDER
Bright People. Right Solutions.
www.kleinfelder.com

PROJECT NO.	116664-2
DRAWN:	3/15/11
DRAWN BY:	B. PIEDE
CHECKED BY:	J. HOFFMAN
FILE NAME:	LAKE ROAD SITE PHOTOS

APPENDIX B—SITE PHOTOGRAPHS 3/2/2011

LAKE ROAD GENERATIONG STATION
KANSAS CITY POWER & LIGHT
ST. JOSEPH, MISSOURI

FIGURE
6

13-Stone Filter between Interim Settling Basin and Final Settling Basin Looking South

14-Final Settling Basin Decant Outlet Works Intake

The information included on this graphic representation has been compiled from a variety of sources and is subject to change without notice. Kleinfelder makes no representations or warranties, express or implied, as to accuracy, completeness, timeliness, or rights to the use of such information. This document is not intended for use as a land survey product nor is it designed or intended as a construction design document. The use or misuse of the information contained on this graphic representation is at the sole risk of the party using or misusing the information.

KLEINFELDER
Bright People. Right Solutions.
www.kleinfelder.com

PROJECT NO.	116664-2
DRAWN:	3/15/11
DRAWN BY:	B. PIEDE
CHECKED BY:	J. HOFFMAN
FILE NAME:	LAKE ROAD SITE PHOTOS

APPENDIX B—SITE PHOTOGRAPHS 3/2/2011

LAKE ROAD GENERATIONG STATION
KANSAS CITY POWER & LIGHT
ST. JOSEPH, MISSOURI

FIGURE
7

15-Landside of South Embankment/Drainage Canal and Outlet Pipe

16-Decanter 12" Outlet Pipe

The information included on this graphic representation has been compiled from a variety of sources and is subject to change without notice. Kleinfelder makes no representations or warranties, express or implied, as to accuracy, completeness, timeliness, or rights to the use of such information. This document is not intended for use as a land survey product nor is it designed or intended as a construction design document. The use or misuse of the information contained on this graphic representation is at the sole risk of the party using or misusing the information.

KLEINFELDER
Bright People. Right Solutions.
www.kleinfelder.com

PROJECT NO.	116664-2
DRAWN:	3/15/11
DRAWN BY:	B. PIEDE
CHECKED BY:	J. HOFFMAN
FILE NAME:	LAKE ROAD SITE PHOTOS

APPENDIX B—SITE PHOTOGRAPHS 3/2/2011

LAKE ROAD GENERATIONG STATION
KANSAS CITY POWER & LIGHT
ST. JOSEPH, MISSOURI

FIGURE
8

17-Landside South Embankment/Drainage Canal and Inlet Culvert to Brown's Branch

18-Piezometer on South Embankment of Interim Settling Basin

The information included on this graphic representation has been compiled from a variety of sources and is subject to change without notice. Kleinfelder makes no representations or warranties, express or implied, as to accuracy, completeness, timeliness, or rights to the use of such information. This document is not intended for use as a land survey product nor is it designed or intended as a construction design document. The use or misuse of the information contained on this graphic representation is at the sole risk of the party using or misusing the information.

KLEINFELDER
Bright People. Right Solutions.
www.kleinfelder.com

PROJECT NO.	116664-2
DRAWN:	3/15/11
DRAWN BY:	B. PIEDE
CHECKED BY:	J. HOFFMAN
FILE NAME:	LAKE ROAD SITE PHOTOS

APPENDIX B—SITE PHOTOGRAPHS 3/2/2011

LAKE ROAD GENERATIONG STATION
KANSAS CITY POWER & LIGHT
ST. JOSEPH, MISSOURI

FIGURE
9

19-Discharge Canal to Brown's Branch Culvert Inlet

20-Stromwater Erosion Control Channel West of West Embankment Toe

The information included on this graphic representation has been compiled from a variety of sources and is subject to change without notice. Kleinfelder makes no representations or warranties, express or implied, as to accuracy, completeness, timeliness, or rights to the use of such information. This document is not intended for use as a land survey product nor is it designed or intended as a construction design document. The use or misuse of the information contained on this graphic representation is at the sole risk of the party using or misusing the information.

KLEINFELDER
Bright People. Right Solutions.
www.kleinfelder.com

PROJECT NO.	116664-2
DRAWN:	3/15/11
DRAWN BY:	B. PIEDE
CHECKED BY:	J. HOFFMAN
FILE NAME:	LAKE ROAD SITE PHOTOS

APPENDIX B—SITE PHOTOGRAPHS 3/2/2011

LAKE ROAD GENERATIONG STATION
KANSAS CITY POWER & LIGHT
ST. JOSEPH, MISSOURI

FIGURE
10

21-Landside of West Embankment Looking North

22-Waterside Embankment of Coal Pile Run-off Pool (West Pool)

The information included on this graphic representation has been compiled from a variety of sources and is subject to change without notice. Kleinfelder makes no representations or warranties, express or implied, as to accuracy, completeness, timeliness, or rights to the use of such information. This document is not intended for use as a land survey product nor is it designed or intended as a construction design document. The use or misuse of the information contained on this graphic representation is at the sole risk of the party using or misusing the information.

KLEINFELDER
Bright People. Right Solutions.
www.kleinfelder.com

PROJECT NO.	116664-2
DRAWN:	3/15/11
DRAWN BY:	B. PIEDE
CHECKED BY:	J. HOFFMAN
FILE NAME:	LAKE ROAD SITE PHOTOS

APPENDIX B—SITE PHOTOGRAPHS 3/2/2011

LAKE ROAD GENERATIONG STATION
KANSAS CITY POWER & LIGHT
ST. JOSEPH, MISSOURI

FIGURE
11

23-Landside Embankment of Interim Settling Basin (West Settling Basin) Looking South

24-Landside Embankment Toe of Interim Settling Basin Looking South

The information included on this graphic representation has been compiled from a variety of sources and is subject to change without notice. Kleinfelder makes no representations or warranties, express or implied, as to accuracy, completeness, timeliness, or rights to the use of such information. This document is not intended for use as a land survey product nor is it designed or intended as a construction design document. The use or misuse of the information contained on this graphic representation is at the sole risk of the party using or misusing the information.

KLEINFELDER
Bright People. Right Solutions.
www.kleinfelder.com

PROJECT NO.	116664-2
DRAWN:	3/15/11
DRAWN BY:	B. PIEDE
CHECKED BY:	J. HOFFMAN
FILE NAME:	LAKE ROAD SITE PHOTOS

APPENDIX B—SITE PHOTOGRAPHS 3/2/2011

LAKE ROAD GENERATIONG STATION
KANSAS CITY POWER & LIGHT
ST. JOSEPH, MISSOURI

FIGURE
12

25-Landside Embankment of Coal Pile Run-off Pool Looking North

26-Landside Embankment of Coal Pile Run-off Pool Looking North

The information included on this graphic representation has been compiled from a variety of sources and is subject to change without notice. Kleinfelder makes no representations or warranties, express or implied, as to accuracy, completeness, timeliness, or rights to the use of such information. This document is not intended for use as a land survey product nor is it designed or intended as a construction design document. The use or misuse of the information contained on this graphic representation is at the sole risk of the party using or misusing the information.

KLEINFELDER
Bright People. Right Solutions.
www.kleinfelder.com

PROJECT NO.	116664-2
DRAWN:	3/15/11
DRAWN BY:	B. PIEDE
CHECKED BY:	J. HOFFMAN
FILE NAME:	LAKE ROAD SITE PHOTOS

APPENDIX B—SITE PHOTOGRAPHS 3/2/2011

LAKE ROAD GENERATIONG STATION
KANSAS CITY POWER & LIGHT
ST. JOSEPH, MISSOURI

FIGURE
13

27-Coal Pile Run-off Inlet (foreground) and Fly Ash Inlet (background)

28-Coal Pile Run-off Pipe Landside Penetration

The information included on this graphic representation has been compiled from a variety of sources and is subject to change without notice. Kleinfelder makes no representations or warranties, express or implied, as to accuracy, completeness, timeliness, or rights to the use of such information. This document is not intended for use as a land survey product nor is it designed or intended as a construction design document. The use or misuse of the information contained on this graphic representation is at the sole risk of the party using or misusing the information.

KLEINFELDER
Bright People. Right Solutions.
www.kleinfelder.com

PROJECT NO.	116664-2
DRAWN:	3/15/11
DRAWN BY:	B. PIEDE
CHECKED BY:	J. HOFFMAN
FILE NAME:	LAKE ROAD SITE PHOTOS

APPENDIX B—SITE PHOTOGRAPHS 3/2/2011

LAKE ROAD GENERATIONG STATION
KANSAS CITY POWER & LIGHT
ST. JOSEPH, MISSOURI

FIGURE
14

29-Coal Pipe Run-off Pipe and Electric Boxes at Landside Toe

30-Fly Ash Inlet and North Embankment of Coal Pile Run-off Pool Looking East

The information included on this graphic representation has been compiled from a variety of sources and is subject to change without notice. Kleinfelder makes no representations or warranties, express or implied, as to accuracy, completeness, timeliness, or rights to the use of such information. This document is not intended for use as a land survey product nor is it designed or intended as a construction design document. The use or misuse of the information contained on this graphic representation is at the sole risk of the party using or misusing the information.

KLEINFELDER
Bright People. Right Solutions.
www.kleinfelder.com

PROJECT NO.	116664-2
DRAWN:	3/15/11
DRAWN BY:	B. PIEDE
CHECKED BY:	J. HOFFMAN
FILE NAME:	LAKE ROAD SITE PHOTOS

APPENDIX B—SITE PHOTOGRAPHS 3/2/2011

LAKE ROAD GENERATIONG STATION
KANSAS CITY POWER & LIGHT
ST. JOSEPH, MISSOURI

FIGURE
15

Appendix C

Response Letter to the EPA's Section 104(e) Request for Information

Enclosure 1

Facility Names:	Kansas City Power & Light Company - Montrose Generating Station
Address of Facilities:	400 SW Hwy P, Clinton, MO 64735
Facility Names:	KCP&L Greater Missouri Operations Company – Lake Road Generating Station
Address of Facilities:	1413 Lower Lake Road, St. Joseph, MO 64504

I, Paul M. Ling, as the manager or other duly authorized representative of Kansas City Power and Light, hereby consent to officers, employees, and authorized representatives of the United States Environmental Protection Agency (collectively "EPA") entering and having continued access to the facilities located at Montrose and Lake Road facilities which are collectively defined herein as:

each coal combustion residue surface impoundment or similar diked or bermed management unit at the Facility;

each management unit at the Facility that is designated as a landfill which receives liquid-borne material from a coal combustion residue surface impoundment or similar diked or bermed management unit; and

each management unit at the Facility which may not currently receive coal combustion residue which has not been closed in accordance with applicable state or federal regulations,

For the purposes of assessing the:

- structural integrity of each Impoundment;
- adequacy of each spillway related to each Impoundment;
- potential effects of overtopping of non-overflow structures related to each Impoundment;
- nature of the soils, ground water, surface water, geology, and hydrogeology at and around each Impoundment;
- history of each Impoundment's performance via data from monitoring instruments; and
- quality and adequacy of public safety protections for each Impoundment.

I understand that these actions by EPA are to be undertaken pursuant to its investigative authority under the Comprehensive Environmental Response, Compensation, and Liability Act, 42 U.S.C. §§ 9601-9675.

This written permission is given by me voluntarily with knowledge of my right to refuse and without threats or promises of any kind.

2/2/2011
Date

PAUL M. LING
Printed name and signature of Facility Manager or Authorized Representative