DRAFT

Coal Combustion Waste Impoundment
Round 7 - Dam Assessment Report

George Neal North Energy Center

(Site # 13)

MidAmerican Energy
Sergeant Bluff, Iowa

Prepared for:

United States Environmental Protection Agency
Office of Resource Conservation and Recovery

Prepared by:

Dewberry & Davis, LLC
Fairfax, Virginia

Under Contract Number: EP-09W001727
November 2010

INTRODUCTION, SUMMARY, CONCLUSION AND RECOMMENDATIONS

The release of over five million cubic yards of coal ash from the Tennessee Valley Authority's Kingston, Tennessee facility in December 2008, which flooded more than 300 acres of land, damaging homes and property, is a wake-up call for diligence on coal combustion waste disposal units. A first step to prevent such catastrophic failure and damage is to assess the stability and functionality of ash impoundments and other units, then quickly take any needed corrective measures.

This assessment of the stability and functionality of the MidAmerican Energy coal combustion waste (CCW) management units at the George Neal North Energy Center is based on a review of available documents and on the site assessment conducted by Dewberry personnel on September 16, 2010. We found the supporting technical information to be adequate for the purposes of this review and assessment (Section 1.1.3). As detailed in Section 1.2 there are a number of recommendations that may help to maintain a safe and trouble-free operation.

In summary, the MidAmerican perimeter dike system containing Surface Impoundments 1, 2, 3A, and 3B, and including the outlet works, at the George Neal North Energy Center is SATISFACTORY for continued safe and reliable operation, with no significant existing or potential management unit safety deficiencies.

PURPOSE AND SCOPE

The U. S. Environmental Protection Agency (EPA) is embarking on an initiative to investigate the potential for catastrophic failure of Coal Combustion Surface Impoundments (i.e. management units) from occurring at electric utilities in an effort to protect lives and property from the consequences of a dam failure or the improper release of impoundment contents. The EPA initiative is intended to identify conditions that may adversely affect the structural stability and functionality of a management unit and its appurtenant structures (if present); to note the extent of deterioration (if present); status of maintenance and/or a need for immediate repair; to evaluate conformity with current design and construction practices, and to determine the hazard potential classification for units not currently classified by the management unit owner or by a state or federal agency. The initiative will address management units that are classified as Less-than-Low, Low, Significant or High Hazard Potential ranking. (For Classification, see pp. 3-8 of the 2004 Federal Guidelines for Dam Safety.)

In March 2009, the EPA sent letters to coal-fired electric utilities seeking information on the safety of surface impoundments and similar facilities that receive liquid-borne material that store or dispose of coal combustion waste. This letter was issued under the authority of the Comprehensive Environmental Response, Compensation and Liability Act (CERCLA) Section 104(e), to assist the Agency in assessing the structural stability and functionality of such

management units, including which facilities should be visited to perform a safety assessment of the berms, dikes, and dams used in the construction of these impoundments.

EPA asked utility companies to identify all management units, such as surface impoundments or similar diked or bermed structures and landfills receiving liquid-borne materials, that store or dispose of coal-combustion residuals or by-products, including, but not limited to, fly ash, bottom ash, boiler slag, and flue gas emission control residuals. Utility companies responded with information on the size, design, age, and the amount of material placed in the units so that EPA could gauge which management units had or potentially could rank as having High Hazard Potential. The USEPA and its contractors used the following definitions for this study:

> "Surface Impoundment or impoundment means a facility or part of a facility which is a natural topographic depression, man-made excavation, or diked area formed primarily of earthen materials (although it may be lined with man-made materials), which is designed to hold an accumulation of liquid wastes or wastes containing free liquids, and which is not an injection well. Examples of surface impoundments are holding, storage, settling and aeration pits, ponds, and lagoons."
>
> For this study, the earthen materials could include coal combustion residuals. EPA did not provide an exclusion for small units based on whether the placement was temporary or permanent. Furthermore, the study covers not only waste units designated as surface impoundments, but also other units designated as landfills which receive free liquids.
>
> EPA is addressing any land-based units that receive fly ash, bottom ash, boiler slag, or flue gas emission control wastes along with free liquids. If the landfill is receiving coal combustion wastes with liquids limited to that for proper compaction, then there should not be free liquids present and the EPA did not seek information on such units which are appropriately designated a landfill.
>
> In some cases coal combustion wastes are separated from the water, and the water containing de minimus levels of fly ash, bottom ash, boiler slag, or flue gas emission control wastes are sent to an impoundment. EPA is including such impoundments in this study, because chemicals of concern may have leached from the solid coal combustion wastes into the waster waters, and the suspended solids from the coal combustion wastes remain.

The purpose of this report is to evaluate the condition and potential of waste release from **management units that have not been rated for hazard potential classification**. A two-person team reviewed the information submitted to EPA, reviewed any relevant publicly available information from state or federal agencies regarding the unit potential hazard

classification (if any) and accepted information provided via telephone communication with a management unit representative.

This evaluation included a site visit. EPA sent two engineers, one licensed in the State of Iowa, for a one-day visit. The two-person team met with the technical and management representatives of the management unit(s) to discuss the engineering characteristics of the unit as part of the site visit. During the site visit the team collected additional information about the management unit(s) to be used in determining the hazard potential classifications of the management unit(s). Subsequent to the site visit the management unit owner provided additional engineering data pertaining to the management unit(s).

Factors considered in determining the hazard potential classification of the management unit(s) included the age and size of the impoundment, the quantity of coal combustion residuals or by-products that were stored or disposed in the these impoundments, its past operating history, and its geographic location relative to down gradient population centers and/or sensitive environmental systems.

This report presents the opinion of the assessment team as to the potential of catastrophic failure and reports on the condition of the management unit(s). The team considered criteria in evaluating the dams under the National Inventory of Dams in making these determinations. (Note: The terms “dike” and “dam” are used interchangeably in this report, as are the terms “pond” and “basin.”)

LIMITATIONS

The assessment of dam safety reported herein is based on field observations and review of readily available information provided by the owner/operator of the subject coal combustion waste management unit(s). Qualified Dewberry engineering personnel performed the field observations and review and made the assessment in conformance with the required scope of work and in accordance with reasonable and acceptable engineering practices. No other warranty, either written or implied, is made with regard to our assessment of dam safety.

DRAFT

TABLE OF CONTENTS

INTRODUCTION, SUMMARY, CONCLUSION AND RECOMMENDATIONS II

PURPOSE AND SCOPE II

1.0 CONCLUSIONS AND RECOMMENDATIONS 1-1

1.1 CONCLUSIONS 1-1
1.1.1 Conclusions Regarding the Structural Soundness of the Management Unit(s) 1-1
1.1.2 Conclusions Regarding the Hydrologic/Hydraulic Safety of the Management Unit(s) 1-1
1.1.3 Conclusions Regarding the Adequacy of Supporting Technical Documentation 1-1
1.1.4 Conclusions Regarding the Description of the Management Unit(s) 1-2
1.1.5 Conclusions Regarding the Field Observations 1-2
1.1.6 Conclusions Regarding the Adequacy of Maintenance and Methods of Operation 1-3
1.1.7 Conclusions Regarding the Adequacy of the Surveillance and Monitoring Program 1-3
1.1.8 Classification Regarding Suitability for Continued Safe and Reliable Operation 1-4
1.2 RECOMMENDATIONS 1-4
1.2.1 Recommendations Regarding the Structural Stability 1-4
1.2.2 Recommendations Regarding the Hydrologic/Hydraulic Safety 1-4
1.2.3 Recommendations Regarding the Supporting Technical Documentation 1-4
1.2.4 Recommendations Regarding the Description of the Management Unit(s) 1-4
1.2.5 Recommendations Regarding the Field Observations 1-5
1.2.6 Recommendations Regarding the Maintenance and Methods of Operation 1-5
1.2.7 Recommendations Regarding the Surveillance and Monitoring Program 1-6
1.2.8 Recommendations Regarding Continued Safe and Reliable Operation 1-6
1.3 PARTICIPANTS AND ACKNOWLEDGEMENT 1-7
1.3.1 List of Participants 1-7
1.3.2 Acknowledgement and Signature 1-7

2.0 DESCRIPTION OF THE COAL COMBUSTION WASTE MANAGEMENT UNIT(S) 2-1

2.1 LOCATION AND GENERAL DESCRIPTION 2-1
2.2 SIZE AND HAZARD CLASSIFICATION 2-3
2.3 AMOUNT AND TYPE OF RESIDUALS CURRENTLY CONTAINED IN THE UNIT(S) AND MAXIMUM CAPACITY 2-6
2.4 PRINCIPAL PROJECT STRUCTURES 2-8
2.4.1 Earth Embankment Dam 2-8
2.4.2 Outlet Structures 2-8
2.5 CRITICAL INFRASTRUCTURE WITHIN FIVE MILES DOWN GRADIENT 2-10

3.0 SUMMARY OF RELEVANT REPORTS, PERMITS AND INCIDENTS 3-1

3.1 SUMMARY OF REPORTS ON THE SAFETY OF THE MANAGEMENT UNIT(S) 3-1
3.2 SUMMARY OF LOCAL, STATE AND FEDERAL ENVIRONMENTAL PERMITS 3-1
3.3 SUMMARY OF SPILL/RELEASE INCIDENTS (IF ANY) 3-1

4.0 SUMMARY OF HISTORY OF CONSTRUCTION AND OPERATION 4-1

4.1 SUMMARY OF CONSTRUCTION HISTORY 4-1
4.1.1 Original Construction 4-1
4.1.2 Significant Changes/Modifications in Design since Original Construction 4-1
4.1.3 Significant Repairs/Rehabilitation since Original Construction 4-2

DRAFT

4.2 SUMMARY OF OPERATIONAL HISTORY 4-2
4.2.1 Original Operational Procedures 4-2
4.2.2 Significant Changes in Operational Procedures since Original Startup 4-3
4.2.3 Current Operational Procedures 4-3
4.2.4 Other Notable Events since Original Startup 4-4

5.0 FIELD OBSERVATIONS 5-1

5.1 PROJECT OVERVIEW AND SIGNIFICANT FINDINGS 5-1
5.1 POND 1 5-2
5.1.1 Embankment Dam and Basin Area 5-2
5.1.2 Outlet Structures 5-4
5.2 POND 2 5-4
5.2.1 Embankment Dam and Basin Area 5-4
5.2.2 Outlet Structures 5-6
5.3 POND 3A 5-7
5.3.1 Embankment Dam and Basin Area 5-7
5.3.2 Outlet Structures 5-9
5.4 POND 3B NORTH 5-9
5.4.1 Embankment Dam and Basin Area 5-9
5.4.2 Outlet Structures 5-11
5.5 ASH POND 3B SOUTH 5-11
5.5.1 Embankment Dam and Basin Area 5-11
5.5.2 Outlet Structures 5-13

6.0 HYDROLOGIC/HYDRAULIC SAFETY 6-1

6.1 SUPPORTING TECHNICAL DOCUMENTATION 6-1
6.1.1 Floods of Record 6-1
6.1.2 Inflow Design Flood 6-1
6.1.3 Spillway Rating 6-2
6.1.4 Downstream Flood Analysis 6-2
6.2 ADEQUACY OF SUPPORTING TECHNICAL DOCUMENTATION 6-3
6.3 ASSESSMENT OF HYDROLOGIC/HYDRAULIC SAFETY 6-3

7.0 STRUCTURAL STABILITY 7-1

7.1 SUPPORTING TECHNICAL DOCUMENTATION 7-1
7.1.1 Stability Analyses and Load Cases Analyzed 7-1
7.1.2 Design Properties and Parameters of Materials 7-3
7.1.3 Uplift and/or Phreatic Surface Assumptions 7-3
7.1.4 Factors of Safety and Base Stresses 7-4
7.1.5 Liquefaction Potential 7-6
7.1.6 Critical Geological Conditions and Seismicity 7-6
7.2 ADEQUACY OF SUPPORTING TECHNICAL DOCUMENTATION 7-6
7.3 ASSESSMENT OF STRUCTURAL STABILITY 7-7

8.0 ADEQUACY OF MAINTENANCE AND METHODS OF OPERATION 8-1

8.1 OPERATIONAL PROCEDURES 8-1
8.2 MAINTENANCE OF THE DAM AND PROJECT FACILITIES 8-1
8.3 ASSESSMENT OF MAINTENANCE AND METHODS OF OPERATION 8-2
8.3.1 Adequacy of Operational Procedures 8-2
8.3.2 Adequacy of Maintenance 8-3

DRAFT

9.0 SURVEILLANCE AND MONITORING PROGRAM 9-1

9.1 SURVEILLANCE PROCEDURES 9-1
9.2 INSTRUMENTATION MONITORING 9-1
9.2.1 Instrumentation Plan 9-1
9.2.2 Instrumentation Monitoring Results 9-1
9.2.3 Dam Performance Data Evaluation 9-1
9.3 ASSESSMENT OF SURVEILLANCE AND MONITORING PROGRAM 9-2
9.3.1 Adequacy of Inspection Program 9-2
9.3.2 Adequacy of Instrumentation Monitoring Program 9-2

EXHIBIT 1: REPRESENTATIVE DESIGN SECTION OF POND 1 PERIMETER DIKE EMBANKMENT E-1

EXHIBIT 2: REPRESENTATIVE DESIGN SECTION OF POND 2 PERIMETER DIKE E-2

EXHIBIT 3: OUTLET STRUCTURE LAYOUT PLAN E-3

EXHIBIT 4: OUTLET STRUCTURE SECTION VIEW E-4

APPENDICES

APPENDIX A - SITE VISIT PHOTOS

APPENDIX B - FIELD OBSERVATION CHECKLIST

APPENDIX C - REFERENCE DOCUMENTS
Doc 1.1: George Neal North Energy Center Google Map Aerial (5-Mile Radius)
Doc 1.2: George Neal North Energy Center Aerial Map
Doc 1.3: Unit Train & Ash Dike Plan & Sections (Original)
Doc 1.4: Unit Train & Ash Dike Sections & Details (Original)
Doc 1.5: HWS Geotechnical Report
Doc 1.6: NPDES Permit

APPENDIX D – REQUESTED INFORMATION
1) Responses to request for missing or additional information
2) HWS Report Appendices D and H (Underseepage Analyses Results)
3) HWS Report Appendix H (Liquefaction Analyses Results)
4) Design drawings for outlet structure
5) Geotek Report of Soil Test Borings at Pond 1 outside slope ash berm

DRAFT

1.0 CONCLUSIONS AND RECOMMENDATIONS

1.1 CONCLUSIONS

Conclusions are based on visual observations from our one-day site visit and review of technical and historical documentation provided by MidAmerican. Field observations are documented with photographs in Appendix A and checklists in Appendix B. (Note: Some information on the checklists was based on field estimates and limited review of available data at the time of the site visit and thus may not be entirely consistent with information presented in this report, which is based on thorough review of all available data, including additional furnished information.) Reference documents, requested information, and miscellaneous information furnished for review are included in Appendices C and D.

1.1.1 Conclusions Regarding the Structural Soundness of the Management Unit(s)

Based on visual observations and review of the HWS Consulting Group Inc. (HWS) Geotechnical Engineering Report, the structural stability of the perimeter dike appears adequate and should remain adequate if properly maintained and operated under the conditions recommended by HWS (see Table 7.1.4D).

1.1.2 Conclusions Regarding the Hydrologic/Hydraulic Safety of the Management Unit(s)

No hydrologic/hydraulic analyses of the ash ponds were available for review. However, on the basis of simple calculations made for this assessment, the ash ponds, which are totally contained within the perimeter dike system, are capable of accommodating precipitation depths exceeding the Iowa Department of Natural Resources' design criterion, as well as the U.S. Army Corps of Engineers' (USACE) design criterion for the size and hazard potential classifications assigned to the NNEC ash ponds.

1.1.3 Conclusions Regarding the Adequacy of Supporting Technical Documentation

Supporting technical documents are adequate for the purposes of this review and assessment, particularly with respect to structural stability. No documentation of hydrologic/hydraulic analyses was available, but none was needed to make an assessment of the ash ponds' capacity to safely contain design storm precipitation over the basins, which are totally contained within perimeter dike systems. However, MidAmerican should perform its own calculations to provide formal documentation of internal hydrologic safety of the ash ponds, taking into consideration changes in internal drainage patterns and reduction in available surcharge storage for storm water as the basins fill with ash.

1.1.4 Conclusions Regarding the Description of the Management Unit(s)

Furnished drawings do not show or note as-built features or all modifications that have been made since original construction. However, descriptions as provided through by the HWS Geotechnical Engineering Report are sufficient.

1.1.5 Conclusions Regarding the Field Observations

The perimeter dike embankment around the ash ponds appeared to be structurally sound with no evidence of embankment or foundation shear failure or significant seepage, although at the time of the site visit there was little or no water in Pond 1, most of Pond 2, and northeast part of Pond 3B North; and the water levels in Pond 3A, southwest part of Pond 3B North, and Pond 3B South were below the maximum operating level by 3.5 feet in Pond 3B South and by almost 2 feet in the other two pond areas.

There were no apparent indications of serious conditions that immediately threaten the safety of the impounding perimeter dike. A couple of relatively shallow holes in the outside slope surface, apparently caused by seepage erosion, were observed in the perimeter dike on the northeast side near east corner of Pond 3B North. MidAmerican has been aware of this condition and has plans to reconstruct the embankment in this area in accordance with HWS' recommendations and field guidance; this should be done before filling the adjacent northeast portion of Pond 3 B North, which is currently being excavated to restore storage volume.

MidAmerican additionally has plans to restore embankment height back up to the design top elevation along the low section of the perimeter dike observed around much of Pond 3B South, as recommended by HWS. This would provide more freeboard above maximum operating pool level than has been available with the lower-than-design dike top elevation. However, from a stability point of view it does not appear necessary to raise the dike, unless it is continuing to settle; the amount of freeboard available between the recommended maximum operating pool elevation (1079 feet) and the existing low dike elevation (1082.89 feet) is actually greater than the freeboard available between the recommended maximum operating pool elevation (1082 feet) and the design dike top elevation (1085 feet) considered the minimum at Pond 2, Pond 3A, and Pond 3B North, although the actual top elevation of the dike around these ponds is typically higher than the design top elevation by more than 1.5 foot to more than 3 feet. The risk of adding fill to the lowest section of the dike, which occurs in the vicinity of the outlet works, is possible rejuvenation of settlement or subsidence in the deeper part of the embankment, which could potentially have some impact on the outlet pipe. Thus, it would be prudent to monitor potential movement after the dike is raised (see Subsection 1.1.7), and it may be of value to monitor potential movement,

even if the dike is not raised, in order to evaluate whether there is on-going movement.

MidAmerican also plans to remove a relatively large berm of material, determined to be bottom ash and coal residuals, observed on the outside slope of the perimeter dike on the west (southwest) side of Pond 1, next to the Missouri River, after permits are obtained from the U.S. Army Corps of Engineers and the Iowa Department of Natural Resources; the excavated material will be placed within Pond 1. This action is appropriate to limit potential erosion of the coal combustion residue into the river.

The outlet structure appears to be in sound and stable condition with no visual evidence of significant deterioration; it appears satisfactory for continued service.

1.1.6 Conclusions Regarding the Adequacy of Maintenance and Methods of Operation

Current methods of operation appear adequate. The maximum operating pool elevations and minimum pond floor elevations recommended by HWS (see Table 7.1.4D) should be observed.

Current maintenance is generally adequate. There was no evidence of repaired embankment breaches or prior releases observed during the field assessment, other than use of dried ash as an embankment material on the perimeter dike. However, the bare outside slope of the perimeter dike at the offset near the south corner of Pond 3A should be protected against erosion.

1.1.7 Conclusions Regarding the Adequacy of the Surveillance and Monitoring Program

The inspection program is generally substandard. The inspection program should be improved as discussed in Subsection 9.3.1 Adequacy of Inspection Program and recommended in Subsection 1.2.7 Recommendations Regarding the Surveillance and Monitoring Program.

There is no permanent dam performance monitoring instrumentation in place at the perimeter dike around the ash ponds. With exception of the lower than design crest elevation on the perimeter dike around much of Pond 3B South, there appear to be no other significant problem or suspect conditions observed in the field that might be reason for installation of permanent or temporary dam performance instrumentation. As discussed in Subsection 9.3.2 Adequacy of Instrumentation Monitoring Program and recommended in Subsection 1.2.7 Recommendations Regarding the Surveillance and Monitoring Program, it would be prudent to install a couple of elevation monuments and monitor elevations of the monuments for a period of time after the low section of embankment is restored back to

design top elevation, since rejuvenated movement of the embankment earth fill could potentially have some impact on the outlet pipe.

A program of ash pond discharge monitoring is in place and will continue in accordance with IA DNR permit requirements.

1.1.8 Classification Regarding Suitability for Continued Safe and Reliable Operation

In accordance with EPA criteria the perimeter dike system impounding the ash ponds, and including the outlet works, at NNEC is rated SATISFACTORY for continued safe and reliable operation. This rating presumes that MidAmerican will adequately maintain the perimeter dike and outlet works and operate the ponds within the operating conditions recommended by HWS.

1.2 RECOMMENDATIONS

1.2.1 Recommendations Regarding the Structural Stability

None appear warranted at this time, other than to maintain current documentation of structural stability analyses as recommended in Subsection 1.2.3.

1.2.2 Recommendations Regarding the Hydrologic/Hydraulic Safety

None appear warranted at this time, other than to maintain current documentation of hydrologic analyses as recommended in Subsection 1.2.3.

1.2.3 Recommendations Regarding the Supporting Technical Documentation

Maintain current documentation of all relevant appropriate stability analyses and hydrologic analyses in MidAmerican files, including copies of the current stability analyses conducted by HWS. Perform hydrologic calculations to provide formal documentation of internal hydrologic safety of the ash, taking into consideration changes in internal drainage patterns and reduction in available surcharge storage for storm water as the basins fill with ash.

1.2.4 Recommendations Regarding the Description of the Management Unit(s)

None appear warranted at this time.

1.2.5 Recommendations Regarding the Field Observations

Two field observations relate to repair issues that MidAmercan already has plans to address. One concerns reconstruction of the embankment where apparent seepage erosion has occurred in the outside face of the perimeter dike on the northeast side near east corner of Pond 3B North. It is recommended that Pond 3B North not be filled with water or contain water to an elevation that exceeds about elevation 1076 feet until the embankment is reconstructed to replace erodible soils in that section of the dike.

The other repair issue concerns raising the low dike section around much of Pond 3B South. It is recommended that the need for raising the low dike be reconsidered with HWS' assistance, to review and evaluate: the cause of the dike being low in this section, whether settlement or subsidence is currently taking place, whether adding fill to the embankment section will rejuvenate or initiate additional settlement or subsidence, whether the outlet pipe would be impacted by additional settlement or subsidence in the deeper part of the embankment section, and whether the additional freeboard gained by raising the low dike is actually needed for hydrologic safety.

One field observation relates to a maintenance issue. Recommendations regarding maintenance issues are included in the following Subsection 1.2.6.

1.2.6 Recommendations Regarding the Maintenance and Methods of Operation

No recommendations appear to be warranted at this time with respect to methods of operation, other than to work within the ash pond operating conditions (constraints) recommended by HWS for maximum operating pool elevations and minimum pond floor elevations (see Table 7.1.4D).

One maintenance recommendation is as follows:

- Establish a grass cover or other erosion protection on the bare outside slope of the perimeter dike at the offset near the south corner of Pond 3A.

1.2.7 Recommendations Regarding the Surveillance and Monitoring Program

It is recommended that the inspection program be formalized and include at a minimum the following:

- Continuing quarterly inspections performed by plant operating personnel. The personnel performing the inspections should be familiar with the dike embankments and trained on what to look for in the field. Consider developing an inspection checklist form specific to the NNEC perimeter dike embankment at each pond and the outlet works.
- Annual inspections performed by an engineer familiar with the dike embankments and associated engineering data and particularly the recommendations given in the HWS Geotechnical Engineering Report. The annual inspections should be documented with a written inspection report, or checklist form, including evaluation, and recommendations as needed.
- Internal inspections of the outlet structure conducted every 5 years with a remote camera or by personnel using confined-space entry procedures. The results should be documented with a written inspection report.

No recommendations for permanent performance monitoring instruments appear to be warranted at this time. However, after raising the low dike section at Pond 3B South, install at least two temporary elevation monuments, one on the crest and one at the outside toe of the section where the lowest crest elevation occurred (near outlet structure), and take elevations on the monuments monthly for 6 months after the initial elevation measurements; the monument at the toe will serve to check for heave in the unlikely event of rotational shear failure. After 6 months, review and evaluate the monitoring data to determine if monitoring should continue for further evaluation or be terminated.

1.2.8 Recommendations Regarding Continued Safe and Reliable Operation

No additional recommendations for continued safe and reliable operation appear to be warranted at this time, other than to periodically review changes in development in the areas around the ash ponds that may alter the hazard potential classification or assessment of the consequences of failure of the perimeter dikes.

DRAFT

1.3 PARTICIPANTS AND ACKNOWLEDGEMENT

1.3.1 List of Participants

*Fred Tucker, Dewberry
*Mark Hoskins, Dewberry
*Reg Soepnel, MidAmerican
*G.L. (Sam) Nelson, MidAmerican
*Jeff Walters, MidAmerican
*Jeff Schultzen, MidAmerican

*Participated in dike field observations.

1.3.2 Acknowledgement and Signature

We acknowledge that the management units referenced herein have been assessed on September 16, 2010.

_____

Mark Hoskins, PE
Registered, IA 19301

_____

Frederic C. Tucker, PE

2.0 DESCRIPTION OF THE COAL COMBUSTION WASTE MANAGEMENT UNIT(S)

2.1 LOCATION AND GENERAL DESCRIPTION

The George Neal North Energy Center (NNEC) is physically located on the east bank of the Missouri River in Woodbury County, Iowa, approximately 5 miles south southwest of Sergeant Bluff and approximately 4 miles west northwest of Salix, Iowa. The NNEC is located at 1151 260th Street, Sergeant Bluff, Iowa 51054 and is approximately 10 miles south of Sioux City, Iowa. See Appendix C - Doc 1.1 for location of the NNEC on an aerial map.

The NNEC has three surface impoundments in series, which are used for managing coal combustion waste (CCW) and are designated as:

- Surface Impoundment 1 (Pond 1)
- Surface Impoundment 2 (Pond 2)
- Surface Impoundment 3 (Ponds 3A, 3B North, and 3B South).

The impoundments, all contained within a perimeter dike system, are operationally divided into five separate units (Pond 1, Pond 2, Pond 3A, Pond 3B North, and Pond 3B South) by internal cross dikes. Because of relocation of the cross dike between Pond 2 and Pond 3A, the northeast part of the original Pond 2 is functionally a part of Pond 3A, although that area is still designated as part of Pond 2.

The ponds are arranged in a southwest to northeast alignment, with Pond 1 next to the Missouri River at the southwest end and Ponds 3B North and 3B South at the northeast end, where an oxbow lake (New Lake) borders the perimeter dike at Pond 3B South; Pond 2 is in between Ponds 1 and 3. With exception of Pond 1, the ponds are hydraulically interconnected and the flow of water is to Pond 3B South, where the outlet structure is located.

Design crest widths and slopes are shown in Table 2.1. However, based on visual observations and furnished recent survey information, it appears that the geometry of the perimeter dike embankment has been altered by ash management operations using dried bottom ash as a material of construction, with the result that the crest around Ponds 1, 2, and 3A is typically somewhat higher and generally much wider and the side slopes typically somewhat steeper than shown in original design drawings. The actual crest width is typically in the range of 20 to 45 feet, except around Ponds 3B North and 3B South, where the crest width is only slightly wider than the design width of 10 feet. The actual crest elevation is typically in the range of 0.5 to 3.5 feet higher than the design elevation, except around much of Pond 3B South, where the crest elevation is approximately 0.7 to 2.1 feet below the design elevation of 1085 feet. The ash-management practices have also created linear ash mounds or dikes some 5 to 10 feet higher than the existing crest just inside the perimeter dike, primarily along the northwest side of Ponds 2 and 3. Periodic dredging of the outlet channel has created a linear mound of dredge-spoil

materials over the outside slope of the perimeter dike along the southeast side of Ponds 1 and 2, with peak elevation several feet higher than the existing crest of Pond 1.

Pond 1 is active and currently receives only boiler slag. Pond 1 no longer has an outlet structure; the original outlet structure has been plugged. This pond receives a small amount of water in daily sluicing operations. Pond 2 currently receives primarily bottom ash and economizer ash, and occasionally fly ash, and floor drain pumped sump flow. Pond 2 originally had its own outlet structure that discharged into the outlet channel on the southeast side of the pond; that outlet structure has also been plugged, so that water flows to Pond 3A. Pond 3A currently receives the sluiced inflow at Pond 2 (northeast part), as well as general drainage through culverts in the northeast cross dike, and any flow from a back-up sluice line from the coal-fired Unit 3 (Neal 3). Pond 3B North receives primarily bottom ash and economizer ash, and occasionally fly ash, from Neal 3. Pond 3B South serves principally as a "polishing pond" and currently doesn't directly receive sluiced ash; it receives drainage from Pond 3A and Pond 3B North via culverts through the cross dikes between these ponds. See Appendix C - Doc 1.2 for relative locations of the basins on an aerial view map of the NNEC.

Pond 1 is an unlined basin with a surface area of approximately 12.2 acres. This pond is contained by the perimeter dike along three sides, and the cross dike on the northeast side. Furnished drawings (Appendix C - Doc 1.3 and Doc 1.4) show that the original design top elevation of the perimeter dike was 1083 feet. However, cross sections made during a recent geotechnical study performed by HWS Consulting Group Inc. (Appendix C - Doc 1.5) indicate a design top elevation of 1085 feet and current centerline elevations ranging 1085.53 feet (SW side) to 1088.45 feet (NW side). MEC listed the maximum height of the perimeter dike at Pond 1 as 12 feet above the outside toe. Apparent minimum outside toe elevation back of the top of the east bank of the Missouri River is at approximately1075 feet, based on a cross section in the furnished report (Appendix C - Doc 1.5); the water level in the adjacent Missouri River was indicated to be at elevation 1055.74 feet on the date of the section survey. Thus the height of the perimeter dike above the outside toe low point at Pond 1 is on the order of 10.5 feet to 13.5 feet, and the crest of the perimeter dike adjacent to the Missouri River is approximately 30 feet above the river. The original bottom elevation of Pond 1 was 1074 feet, based on information on the furnished drawing (Appendix C - Doc 1.3). However, part of the bottom has been excavated to as deep as approximately 1066.5 feet, according to cross sections in the furnished report (Appendix C - Doc 1.5), which is well below original bottom grade and below the outside toe grade.

Pond 2 is an unlined basin with a surface area of approximately 26.9 acres. This pond is contained by the perimeter dike along the northwest and southeast sides, and cross dikes on the southwest and northeast sides, although the original (formal) limit of Pond 2 is northeast of the current northeast side cross dike (see aerial view in Appendix C - Doc 1.2). A furnished drawing (Appendix C - Doc 1.3) shows the original design top elevation of the perimeter dike was 1085 feet at Pond 2. However, a cross section made during the recent geotechnical study (Appendix C - Doc 1.5) indicates a current centerline elevation of 1088.18 feet (SE side). (The perimeter dike on the northwest side was not surveyed.) MEC listed the maximum height of perimeter dike at

Pond 2 as 11 feet above the outside toe. The outside toe is at an approximate elevation of 1077 feet, the nearby outlet channel top of bank is 1075 feet, and the outlet channel bottom is at about elevation 1067 feet, based on the surveyed cross section in the furnished report (Appendix C - Doc 1.5). Thus the height of the perimeter dike above the outside toe low point on the southeast side of Pond 2 is about 11.2 feet, about 13.2 feet above the outlet channel bank, and about 21.2 feet above the channel bottom. The original bottom elevation of Pond 2 was approximately 1069 feet, based on information on the furnished drawing (Appendix C - Doc 1.3). The surveyed cross section shows the southeast part of the basin filled with ash to approximately 1084 feet; however, the elevation was lower at the time of the site visit, since the ash (i.e., mostly cemented fly ash or C-stone) was in the process of being excavated and placed in a landfill (ash monofill).

Pond 3 is an unlined basin with a surface area of approximately 76.1 acres. This pond is contained by the perimeter dike along three sides. The original cross dike on the southwest side has been partially obliterated and does not serve as an impounding structure; a newer cross dike exists across Pond 2, separating the northeast part of Pond 2 from the larger, southwest part. Thus, the northeast part of Pond 2 is functionally a part of Pond 3A. A cross dike on the northeast side of Pond 3A separates Pond 3A from Pond 3B, and a cross dike on the northwest side of Pond 3B South separates Pond 3B South from Pond 3B North. Cross sections made during the recent geotechnical study (Appendix C - Doc 1.5) indicate a design top elevation of 1085 feet and current centerline elevations for the perimeter dike ranging 1082.89 feet (SE side of Pond 3B) to 1087.79 feet (NW side of Pond 3A). As previously mentioned, much of the perimeter dike around Pond 3B South is below the design crest elevation. MEC listed the maximum height of perimeter dike at Pond 3 as 20 feet above the outside toe. Apparent minimum outside toe elevation is approximately1071.16 feet next to the oxbow lake on the east side of Pond 3B South, based on the cross sections in the furnished report (Appendix C - Doc 1.5). Thus the height of the perimeter dike above the outside toe low point at this section of the perimeter dike around Pond 3 is about 14.6 feet. The bottom of the channel bank just beyond the toe of the perimeter dike at the southeast corner of Pond 3A is at elevation 1070.35 feet; the crest of the adjacent dike is at elevation1086.74 feet, which is about 16.4 feet above the bottom of the bank at this section. The original bottom elevation of Pond 3 was approximately 1072.5 feet, based on original grade lines shown on the cross sections in the geotechnical study. The surveyed cross sections show that the sub ponds of Pond 3 are filled with ash deposits or sediment to various levels ranging from less than elevation 1075 feet in Pond 3B South to 1086 feet in the northeast part of Pond 3B North, discounting the ash mound built just inside the perimeter dike on the northeast side of Pond 3. A recently mined area in Pond 3B North is shown to be below elevation 1070 feet, which is below the original bottom elevation.

2.2 SIZE AND HAZARD CLASSIFICATION

The NNEC dike embankments are not regulated by a federal or state agency and currently do not have federal or state hazard potential classifications. The surface impoundments are regulated by the Iowa Department of Natural Resources (IA DNR).

Pond 1 – Maximum dam height is 12 feet, according to furnished information. The total storage capacity is 136 acre-feet. Other physical data are summarized in Table 2.1. The USACE criteria for Size Classification are presented in Table 2.2. Based on either dam height or storage capacity, the Pond 1 dam has a Small Size Classification. The dam currently has an undetermined hazard potential rating. The criteria for Hazard Potential Classification used by the Environmental Protection Agency (EPA) are presented in Table 2.3. For comparison the IA DNR criteria for Dam Hazard Classification are presented in Table 2.4. Failure of the perimeter dike at Pond 1 could discharge CCW into the Missouri River. The failure would not likely cause loss of life, but could cause some environmental damage. Therefore, the Pond 1 dam should be given a Low Potential Hazard Classification per the criteria used by EPA (Table 2.3).

Pond 2 – Maximum dam height is 11 feet, according to furnished information. The total storage capacity is 296 acre-feet. Other physical data are also summarized in Table 2.1. Based on either dam height or storage capacity, the Pond 2 dam has a Small Size Classification. The dam currently has an undetermined hazard potential rating. Failure of the perimeter dike on the southeast side of Pond 2 would discharge water and CCW into the adjacent discharge channel, which leads to the Missouri River; less likely failure through the perimeter dike on the northwest side would release water and some CCW into a low area between the pond and the coal pile, which would drain toward the Missouri River. Failure of the Pond 2 perimeter dike would not likely cause loss of life, but would cause some environmental damage and potential minor economic damage to MEC property. Therefore, the Pond 2 dam should be given a Low Potential Hazard Classification per the criteria used by EPA (Table 2.3).

Pond 3 – Maximum dam height is 20 feet, according to furnished information. The total storage capacity is 837 acre-feet. Other physical data are also summarized in Table 2.1. Based on either dam height or storage capacity, the Pond 3 dam has a Small Size Classification. The dam currently has an undetermined hazard potential rating. Depending on location on the perimeter dike, failure of the dam would discharge water and CCW directly into the discharge channel leading to the Missouri River at the dike segment on southwest side of Pond 3A, or directly into the oxbow lake or channel inlet to the 4-foot diameter culvert along the dike segment around 3B South, or onto MEC property and potentially onto a nearby industrial property along the dike segment around Pond 3B North, or onto MEC property along the dike segment on the northwest side of Pond 3A. Because of the internal dikes, a breach failure at any one location along the perimeter dike would not expose all the CCW in Pond 3 to potential erosion and transport with water released through a breach. The failure would not likely cause loss of life, but would cause some environmental damage and potential minor economic damage to MEC property and possibly to industrial property on the northeast side of Pond 3B North. Therefore, the Pond 3 dam, inclusive of perimeter dike around Ponds 3A, 3B North & 3B South) should be given a Low Potential Hazard Classification per the criteria used by EPA (Table 2.3).

DRAFT

Table 2.1: Summary of Dam Dimensions and Size*					
	Pond 1	Pond 2	Pond 3A	Pond 3B North	Pond 3B South
Dam Height (feet)*	12	11	20	20	20
Total Storage Capacity (acre-feet)	136	296	837		
Crest Width (feet)***	10	10	10	10	10
Length (feet)	~2,172	~3,455**	~3,346	~3,856**	~3,128**
Side Slopes - Inside (horiz:vert)***	2:1	2:1	2:1	2:1	2:1
Side Slopes - Outside (horiz:vert)***	3:1	3:1	3:1	3:1	3:1
Hazard Classification****	Low	Low	Low	Low	Low

**Based on data in MEC response to EPA's RFI dated March 17, 2009.*
***Includes cross dike*
****Based on furnished design information*
*****EPA Hazard Classification*

Table 2.2: Size Classification* Per USACE ER 1110-2-106, September 26, 1979		
Category	Impoundment Storage (Acre-Feet)	Dam Height (Feet)
Small	Less than 1,000 but equal to or greater than 50	Less than 40 but equal to or greater than 25
Intermediate	Less than 50,000 but equal to or greater than 1,000	Less than 100 but equal to or greater than 40
Large	Equal to or less than 50,000	Equal to or less than 100

**Note: Size classification may be determined by either storage or height of structure, whichever gives the higher category.*

Table 2.3: Dam Hazard Potential Classification Used by EPA	
Category	Hazard Potential Description
High Hazard Potential	Dams where failure or misoperation will probably cause loss of human life.
Significant Hazard Potential	Dams where failure or misoperation results in no probable loss of human life but can cause economic loss, environmental damage, disruption of lifeline facilities, or can impact other concerns. Significant hazard potential classification dams are often located in predominantly rural or agricultural areas but could be located in areas with population and significant infrastructure.
Low Hazard Potential	Dams where failure or misoperation results in no probable loss of human life and low economic and/or environmental losses. Losses are principally limited to the owner's property.
Less Than Low Hazard Potential	Dams where failure or misoperation results in no probable loss of human life or economic or environmental losses.

Table 2.4: Dam Hazard Classification* Per IA DNR	
Category	Hazard Description
Multiple Dams	Structures located in areas where failure of a dam could contribute to failure of a downstream dam or dams, the minimum hazard class of the dam shall not be less than that of such downstream structure.
High Hazard	Structures located in areas where failure may create a serious threat of loss of human life or result in serious damage to residential, industrial or commercial areas, important public utilities, public buildings, or major transportation facilities.
Moderate Hazard	Structures located in areas where failure may damage isolated homes, industrial or commercial buildings, moderately traveled roads or railroads, interrupt major utility services, but without substantial risk of loss of life. Structures that of themselves are of public importance.
Low Hazard	Structures located in areas where damages from a failure would be limited to loss of the dam, loss of livestock, damages to farm outbuildings, agricultural lands, and lesser used roads, and where loss of human life is considered unlikely.

**Iowa DNR, Technical Bulletin 16 – Design Criteria and Guidelines for Iowa Dams. December 1990.*

2.3 AMOUNT AND TYPE OF RESIDUALS CURRENTLY CONTAINED IN THE UNIT(S) AND MAXIMUM CAPACITY

The amount of CCW residuals stored in the units and maximum capacities are summarized in Table 2.5. The CCW is temporarily stored, rather than permanently disposed, in the ponds. A total of 150,000 tons of coal combustion residue is removed from all the ponds every two years; some of the material is beneficially re-used, and the remainder is disposed in a nearby dry ash monofill.

Pond 1 – Based on information from MEC, this basin has contained fly ash, bottom ash, economizer ash, and boiler slag deposited over 38 years. This basin is currently active and receives only boiler slag. Storage volume is maintained by excavating the boiler slag for retail sale (beneficial reuse in manufacture of roofing shingles) or disposal in an adjacent dry monofill. A total of 82 acre-feet of coal combustion residue were contained within Pond 1, when last measured (March 4, 2009). Part of the Pond 1 bottom was over-excavated well below the original bottom elevation during previous mining of the material in the pond. A pool of water is not normally maintained in this pond; the maximum water elevation is to be 1078.5 feet.

Pond 2 – Based on information from MEC, this basin has contained fly ash, bottom ash, economizer ash, and boiler slag deposited over 38 years. This basin is active and currently receives predominantly bottom ash and economizer ash, lesser amounts of fly ash, and floor drain sump flow. Storage volume is maintained by excavating the ash deposits for retail sale (beneficial reuse of C-stone) or disposal in an adjacent dry monofill. A total of 176 acre-feet of coal combustion residue were contained within Pond 2, when last measured (March 4, 2009). The maximum operating pool level in Pond 2 is 1082 feet. However, at the time of the site visit ash deposits were in the process of being mined to restore storage volume in the southeast part of the basin and there was no water within this dike-enclosed part of the basin.

Pond 3 – Based on information from MEC, this multiple-cell basin has contained fly ash, bottom ash, economizer ash, and boiler slag deposited over 35 years. This basin is active and currently receives predominantly bottom ash and economizer ash, and lesser amounts of fly ash in both Pond 3A and southwest part of Pond 3B North; as previously mentioned, Pond 3B South does not directly receive sluiced ash and serves as a polishing pond. Storage volume is maintained by excavating the ash deposits for retail sale (beneficial reuse of C-stone) or disposal in an adjacent dry monofill. The northeast part of Pond 3B North has been diked off for mining of the ash deposits; the southeast part of this area has been excavated below the original bottom elevation, as previously mentioned. A total of 335 acre-feet of coal combustion residue were contained within Pond 3, when last measured (March 4, 2009). The pool elevations in Pond 3A, Pond 3B North (southwest part), and Pond 3B South were at 1080.9 feet, 1080.4 feet, and 1076.5 feet, respectively, at the time of the site visit. The Pond 3B South pool elevation had recently been drawn down 3 feet for winter operation from the recent summer operating pool elevation of 1079.5 feet; the future maximum operating pool elevation in Pond 3B South is to be 1079.0 feet. The maximum operating pool elevation in both Pond 3A and Pond 3B North is 1082 feet. There was no pool of water in the northeast part of Pond 3B North at the time of the site visit, where mining of ash deposits is scheduled.

Table 2.5: Amount of Residuals and Maximum Capacity of Unit*

	Pond 1	**Pond 2**	**Pond 3**
Surface Area (acre)	12.2	26.9	76.1
Current Storage Volume (acre-feet)	82	176	335
Total Storage Capacity (acre-feet)	136	296	837

**Based on data in MEC response to EPA's RFI dated March 17, 2009*

2.4 PRINCIPAL PROJECT STRUCTURES

2.4.1 Earth Embankment Dam

The perimeter dike and cross dikes are homogeneous earth-fill embankments. The soils used for earth fill in the dikes appear to have been locally obtained from excavations made within the basin areas during original construction. Notes on the original design plans (see Appendix C - Doc 1.3) indicate to "strip all un-usable top soil (approximately 6 in. avg. depth) in borrow area" (i.e., basin area) and that "excavation and placing of compacted fill shall be done in accordance with Ebasco Spec. IOWA-N2-CH-1." No internal drainage measures or toe drains were included in the embankment design for seepage control.

Based on subsurface information obtained in the geotechnical study (Appendix C - Doc 1.5), the perimeter dike embankment was constructed of "cohesive and granular fill overlying alluvium (lean and fat clays with varying sand contents; poorly graded, clayey, and silty sands and silts)." The available boring logs from the geotechnical study indicate that the embankment soils consist predominantly of lean clay and sandy silt with some layers of fat clay, clayey sand, and silty sand; the boring logs indicate that the foundation soils consist predominantly of cohesive soils (both lean and fat clays with some silt) in the upper foundation soil profile and generally more granular soils (poorly graded sands and silty sands) deeper in the profile.

The design geometric features of the perimeter dike embankment are summarized in Table 2.1. A representative section of the original perimeter dike embankment for Pond 1 is shown in Exhibit 1. A representative section of the original perimeter dike embankment for Pond 2 is shown in Exhibit 2. However, as previously mentioned, ash management operations have generally altered the geometry of the perimeter dike, as shown by the cross sections from the geotechnical study (see Appendix C - Doc 1.5), which show the original plan grades compared to the existing 2009 field grades. The existing perimeter dike typically has ash layers constructed over the crest and over both the inside and outside slopes, as shown by the boring logs. In fact, the boring logs show that the perimeter dike on the southeast side of Pond 2 consists entirely of fly ash. The total length of the perimeter dike is approximately 10,664 feet. The total length of the cross dikes is approximately 5,293 feet.

2.4.2 Outlet Structures

There is only one outlet for the surface impoundments, located at the south corner of Pond 3B South. The existing outlet includes a new stop-log structure (overflow structure) and section of bottom discharge pipe that recently replaced the original skimmer and section of outlet pipe. Plan and Section views of the

outlet structure are shown in Exhibits E-3 and E-4. Actual plans for this new part of the outlet structure and other upgrades to the outlet works are included in Appendix D - Item 4 for reference.

The new overflow structure is a reinforced concrete tower with bottom discharge into a new 2-foot diameter RCP that extends into the dike and connects at 45-degree angle with the original RCP that extends to an existing reinforced concrete wet well at the crest of the perimeter dike; the original skimmer was capped and the outlet pipe upstream of the connection was abandoned in place after the new overflow structure was placed in operation. The overflow structure has gross inside dimensions of 4 feet by 6 feet and outside dimensions, above the base section, of 7 feet by 8 feet. The top elevation of the structure is 1085 feet. The outboard side is open with metal guide slots in the side walls between a sill elevation of 1074 feet and the top of the structure. Aluminum stop logs 4 feet long by 5 inches wide by 12 inches high fit in the guide slots with a davit crane mounted on the top of the structure to control the pond water elevation. An 8-foot by 8-foot steel plate baffle around the stop-log side serves as a skimmer box to block entry of floating ash particles (cenospheres) and other floating debris. The inside of the baffle is fitted with a staff gage. The invert elevation of the new discharge pipe section is 1071 feet at the inboard wall of the overflow structure; flow into the pipe is controlled with a cast iron sluice gate. The opposite end of the discharge pipe at the existing wet well has an invert elevation of 1069 feet and is also fitted with a cast iron sluice gate. Both gates have motor and manual operator.

Discharge from the wet well is through an existing 2-foot diameter RCP, which is controlled with a cast iron sluice gate with manual operator; the invert elevation of this pipe in the bottom of the wet well is slightly above 1069 feet. The pH of the water is monitored at the overflow structure, at the wet well, and in the discharge line from the wet well. Water in the wet well is infused with carbon dioxide (CO_2) to maintain pH between limits of 6 and 9. It is understood from MidAmerican personnel that the pH of the water in Pond 3B North typically is in the range of 8.3 to 8.7; CO_2 is added to keep it around 8.

The outlet pipe from the wet well discharges into a 4-foot diameter RCP culvert at a buried connection. The buried culvert extends approximately 1,650 feet to its outfall into an open discharge channel. The culvert also receives flow from an upstream channel from the oxbow lake. The inlet end of the culvert has an animal guard constructed of metal bars; the guard also serves to block entry of large floating debris.

The distance from the 4-foot diameter culvert outfall to the outfall into the Missouri River is approximately 1,200 feet. The water in the discharge channel flows into another culvert for a short distance where fill had been placed across

the channel for access to a landfill site on the southeast side of the channel, across from the east corner of Pond 1. The culvert is a 4-foot diameter corrugated aluminum pipe. Down-gradient of this culvert outfall, the open discharge channel continues to the outfall to the Missouri River, where flow is measured with a rectangular weir and water is sampled for water-quality monitoring. Past the weir the water flows into a 4-foot diameter RCP under an access road fill before outfalling to the river.

As previously mentioned, the ponds, except Pond 1, are hydraulically interconnected and the flow of water is to Pond 3B South; Pond 1 has no outlet, inflow of water into this pond is minimal. Pond 2 sluice water and plant drainage water currently flow into the northwest part of Pond 2 and from the discharge point through channels excavated in ash to a ponded area next to the newer cross dike, where the water appeared to flow through two culverts under the cross dike to the former northeast area of Pond 2 and on to Pond 3A, as there is no continuous dike at the original northeast cross-dike location. The south part of Pond 2 is currently being excavated to restore storage volume, but when that area of the pond again receives sluice water and plant drainage water, it is presumed that water from that area will drain to the northeast part of Pond 2 on the way to Pond 3A via one or more culverts through the current cross dike, in order to maintain an access roadway across the pond. Drainage from Pond 3A to Pond 3B South is via 2-foot diameter culvert through the cross dike on the southwest side of Pond 3B South; it is understood from MidAmerican personnel that the invert elevation at the inlet end of this culvert is currently set at 1079.8 feet. Drainage from Pond 3B North (from currently operational southwest part) to Pond 3B South is via a 2-foot diameter culvert through the cross dike on the northwest side of Pond 3B South; it is understood that the invert elevation at the inlet end of this culvert also is currently set at 1079.8 feet.

2.5 CRITICAL INFRASTRUCTURE WITHIN FIVE MILES DOWN GRADIENT

Using Google Maps dated 2010, no “critical” infrastructure was observed within a 5-mile down-gradient radius. “Critical” infrastructure includes facilities such as schools and hospitals. There are 3 schools, and 1 medical facility located within the 5 mile radius up-gradient to the north and to the southeast, near the 5-mile limit. These facilities are noted on the 5-mile radius map included in Appendix C - Doc 1.1 of this report.

In general, the land use immediately surrounding the ponds is industrial and agricultural; the Missouri River lies immediately down-gradient, and the oxbow lake is adjacent to the perimeter dike at Pond 3B. Flood impacts from postulated failure of the perimeter dike around the ponds at the NNEC include flooding of the immediately surrounding areas, mainly confined to MEC property, potential flooding of adjacent industrial property to the northeast, and discharge into the oxbow lake and into the Missouri River.

3.0 SUMMARY OF RELEVANT REPORTS, PERMITS AND INCIDENTS

3.1 SUMMARY OF REPORTS ON THE SAFETY OF THE MANAGEMENT UNIT(S)

NNEC conducts internal quarterly inspections, and informal daily inspections of the dike embankments. Documentation of the quarterly inspections has just recently been initiated using a checklist form. A geotechnical study was performed in 2009 by HWS Consulting Group Inc. (HWS) to assess the stability of the perimeter-dike system containing the ash ponds. The results of that study, submitted in a report titled "Geotechnical Engineering Report- Fly Ash Disposal Pond Containment Assessment" dated June 15, 2009 (see Appendix C - Doc 1.5), are summarized and discussed in Chapter 7.0 Structural Stability.

3.2 SUMMARY OF LOCAL, STATE AND FEDERAL ENVIRONMENTAL PERMITS

The NNEC is currently regulated under NPDES Permit No. 97-00-1-02 (see Appendix C - Doc 1.6). This permit was effective on April 1, 1998 and expired on March 31, 2003.

The facilities at the NNEC are regulated for water quality by the IA DNR. Water sampling at the outlet structure of Pond 3B South and at the outfall to the Missouri River from the discharge channel is also conducted to monitor the quality of discharge that reaches the river.

3.3 SUMMARY OF SPILL/RELEASE INCIDENTS (IF ANY)

There have been no reported spill/release incidents at the NNEC surface impoundments.

4.0 SUMMARY OF HISTORY OF CONSTRUCTION AND OPERATION

4.1 SUMMARY OF CONSTRUCTION HISTORY

4.1.1 Original Construction

The original design of the NNEC surface impoundments was prepared by Ebasco Services Incorporated (Ebasco), New York. The design drawings were approved and sealed by a Professional Engineer, A. A. Ferlite. The name of the contractor for construction is not available, and it is not known whether the basins were constructed under the supervision of a Professional Engineer. Therefore, little is known of original construction, other than Ponds 1 and 2 were constructed at the same time in 1972 and Pond 3 was constructed in 1975. The basins were constructed on alluvial bottomlands adjacent to the Missouri River, apparently in-part along the trace of an old river bend (oxbow).

4.1.2 Significant Changes/Modifications in Design since Original Construction

As previously mentioned, ash management operations have generally altered the geometry of the perimeter dike, as shown by the cross sections from the geotechnical study (see Appendix C - Doc 1.5). Section 2.1 Location and General Description includes further descriptions of the alterations from design.

During the site visit on September 16, 2010, a relatively large berm of material was observed on the outside slope of the perimeter dike on the southwest side of Pond 1, adjacent to the Missouri River. The berm is not a part of the original design, and there was a question as to whether the berm was placed to buttress and enhance stability of the outside slope or was placed for some other reason. MidAmerican staff did not think the berm was placed for stability purposes but were unaware of any purpose for the berm. Although there was a vegetative cover that generally obscured the subsurface material, the berm appeared to consist of ash. MidAmerican staff indicated that the berm would be investigated and subsequently engaged Geotek Engineering & Testing Services, Inc. (Geotek) to drill 3 soil test borings along the berm. The borings found that the berm consists primarily of bottom ash and coal residuals to depths ranging from 4.5 feet at the southeast end to at least 11 feet at the northwest end and 9.5 feet in the middle. The logs of the borings are presented in Geotek's report dated September 30, 2010, which is included in Addendix D - Item 5 for reference. MidAmerican has indicated that plans are to remove the berm and place the material inside Pond 1, once permits from the USACE and IA DNR have been obtained.

The original cross dike between Pond 2 and Pond 3A was generally dismantled and no longer serves to separate the two ponds; however, another cross dike was constructed generally perpendicular across Pond 2 to the southwest of the original generally diagonal cross dike.

The original outlets from Pond 1 and Pond 2 to the discharge channel were plugged with concrete.

It is not clear from furnished plans whether the approximately 1,650-foot long 4-foot diameter RCP culvert that discharges into the outlet channel was an original design feature or a feature added when land on the southeast side of Pond 3A began to be developed as a landfill for dry disposal of ash (ash monofill).

4.1.3 Significant Repairs/Rehabilitation since Original Construction

The outlet structure at Pond 3B South was recently rehabilitated with a new stop-log structure and other upgrades (see Subsection 2.4.2 Outlet Structures). There have been no significant repairs/rehabilitation made to the perimeter dike containing the ash ponds since the original construction.

4.2 SUMMARY OF OPERATIONAL HISTORY

4.2.1 Original Operational Procedures

The furnished documents do not include the original operational procedures. However, based on discussions with MidAmerican personnel, it appears that original operation was much as it is today with respect to the manner in which the ash is transported and disposed, i.e., by sluicing with water into the basins where the ash particles are allowed to settle out.

It also appears that, originally, ash, including fly ash, bottom ash, and boiler slag were sluiced into each of the three ponds, with the coal combustion residue from the coal-fired Unit 1 (Neal 1) going to Pond 1, coal combustion residue from the coal-fired Unit 2 (Neal 2) going to Pond 2, along with pumped plant drainage water and periodically boiler wash-down chemicals, and coal combustion residue from the coal-fired Unit 3 (Neal 3) going to Pond 3. The water impounded in Pond 1 and Pond 2 originally discharged through an outlet structure at each pond to the discharge channel located beyond the outside toe of the perimeter dike on the southeast side of these ponds.

4.2.2 Significant Changes in Operational Procedures since Original Startup

No documents were provided to indicate the changes in operational procedures that have occurred since original startup. However, based on discussions with MidAmerican personnel, it appears that operational procedures began to change as the ponds began to fill up and there was a need to restore storage volume. The changes involved excavation of ash material from the surface impoundments for beneficial reuse, when possible, and disposal of dried excavated ash material in landfills developed on MEC property to the southeast of the ash ponds. Initially, however, before the landfills were opened, it appears that ash deposits were excavated from within the interior of the basin areas and stacked or mounded just inside the perimeter and even over the perimeter dike. Additional interior dikes, particularly in Pond 3, began to be used in ash management operations, to isolate areas that needed to be excavated to restore storage volume, while adjacent areas remain operational, and to separate out a defined "polishing pond" area (Pond 3B South).

In 1980-81, fly ash management was switched from a wet system (i.e., sluicing with water to the ponds) to a predominantly dry system, where the fly ash is collected dry in silos and either sold or disposed in an ash monofill.

4.2.3 Current Operational Procedures

The surface impoundments are operated and monitored for water quality under an NPDES permit.

Pond 1 – Current operation consists of discharging slag with a small amount of water to the basin a few hours each day. The ash in the basin is excavated, pre-screened, and stockpiled in the basin until it is loaded and transported for beneficial reuse in the manufacture of shingles.

Pond 2 - Current operation consists of discharging primarily bottom ash and economizer ash, some fly ash, non hazardous chemical cleaning byproduct (infrequently), and floor drain sump flow to the pond. The ash in the pond is excavated for disposal in the ash monofill, or for beneficial reuse when possible; the southwest part of the pond was in the process of being excavated at the time of the site visit. Water flows from Pond 2 to Pond 3A.

Pond 3A - Current operation is that this pond receives the sluiced inflow at Pond 2 (northeast part) and any flow from a back-up sluice line from the coal-fired Unit 3 (Neal 3). Water flows from Pond 3A through a culvert into Pond 3B South, the polishing pond.

Pond 3B North – Current operation consists of discharging primarily bottom ash and economizer ash, and occasionally some fly ash, from Neal 3. The ash in the pond is excavated for disposal in the ash monofill, or for beneficial reuse when possible; the northeast part of the pond is diked off and the southeast part of diked area had been excavated at the time of the site visit. Water flows from Pond 3B North through a culvert into Pond 3B South.

Pond 3B South – Current operation uses this pond mainly as a polishing pond to achieve NPDES discharge limits prior to release of the water through the outlet structure to the outlet channel that leads to the Missouri River. Water flows under a metal skimmer box, and over stop-logs in the overflow structure near the south corner of the basin. The pH of the water is adjusted by infusion with CO_2 in the wet well before the water discharges through the outlet pipe

Current operational procedures are also discussed in Section 8.1 Operational Procedures.

4.2.4 Other Notable Events since Original Startup

Based on furnished information and discussions with MidAmerican personnel, there generally are no other notable events since original startup of the surface impoundments to report at this time. MidAmerican personnel indicated that there were some issues with pH quickly spiking high in the summer season for unknown reasons.

5.0 FIELD OBSERVATIONS

5.1 PROJECT OVERVIEW AND SIGNIFICANT FINDINGS

Dewberry personnel Frederic C. Tucker, PE and Mark Hoskins PE collected available data and documents and made field observations during a site visit on September 16, 2010, in company with the participants listed in Section 1.3. The design engineer of record for the ash ponds was not present or available to assist with answering questions about these basins. The site visit began at 10:00 AM. Weather conditions during the visit were 75 degrees Fahrenheit, cloudy, and dry. Photographs were taken of conditions observed. Photographs referenced below are contained in Appendix A.

The overall visual assessment is that the earthen embankments that impound Pond 1, Pond 2, and Pond 3 are in good condition. No visual signs of imminent instability or inadequacy of the principal structures at these basins that would require emergency remedial action were observed. Some minor erosion repairs to the dikes were observed. It was observed that trees and brush have been removed extensively along the outside perimeter slope and toe area around all the ponds. Portions of the outside slope along Ponds 2 and 3A have been recently graded.

Cross section geometry surveyed by HMS Engineers (Lincoln NE) in June 2009, for Neal North is included in Appendix C - Doc 1.5. The pond dikes are generally 12 to 15 feet high along the southeast and southwest sides. Many trees have been removed all along the outer dike slopes. The outer slopes along the southeast side of Ponds 1 and 2, along the southwest offset section of the dike at Pond 3A, and the outer slope on the southeast side of Pond 3B South have sparse vegetative cover or no vegetative cover where recent clearing had been done; the other outer slopes have a generally good grass cover. It was noted that some minor eroded areas had been recently repaired with clay fill; typical views of these repairs are shown in Photos 2.12 and 3.3. No obvious indications of stability problems, such as tension cracks, vertical or horizontal offsets, slide scarps, slumps, bulges, gouges or swaths of overturned trees, seepage, etc. were observed on the dike embankments. A low crest section, apparently due to settlement or subsidence, was observed primarily along the SE side of Pond 3B South, as shown in Photo 3.5. Relatively shallow holes or depressions were observed on the outside slope of the dike on the northeast side of Pond 3B North, near the east corner; the holes occur several feet (vertically) below the crest and are thought to be the result of erosion caused by seepage through the relatively silty/sandy embankment soils at this location, when the water level in the pond was at maximum level; the slope area with the holes is shown in Photo 3.8.

According to MidAmerican staff, for many years the fly ash and bottom ash in the ponds were excavated out of the pond bottoms and piled-up along the top of the original dikes, especially along the NE & NW sides of Pond 3B north and along the NW sides of both Pond 3A and Pond 2. On the southwest side (adjacent to the Missouri River) a relatively large berm of ash was observed on the outside slope of the dike, as shown in Photos 1.5, 1.6, and 1.10. The present policy is not to stockpile any more ash on-site; all excavated ash now is removed to a nearby landfill or sold to a third party.

5.1 POND 1

5.1.1 Embankment Dam and Basin Area

Pond 1Crest

Much of the dike crest around Pond 1 has a typically bare surface consisting of compacted ash material with some spotty light vegetation. On the southeast side the bare crest merges into the gravel-surfaced access road that leads down to the toe area on the southeast side and to the final outfall structure that discharges into the Missouri River (see Photo 1.13). The original dike is below the current top surface. The original dike cross sections are shown compared to current surveyed geometry at selected locations located in the HMS report in Appendix C - Doc 1.5.

Pond 1 Crest Photos:
Northwest perimeter dike embankment: 1.2, 2.5
Northeast cross dike embankment: 1.16
Southwest perimeter dike embankment: 1.4, 1.12
Southeast perimeter dike embankment: 1.14, 1.15

No major depressions, sags, tension cracks or other signs of significant settlement or mass soil movement were observed on the Pond 1crest. It was observed that spoil materials from dredging of the outlet channel had been cast onto the outside slope along the southeast side, next to the access road to the toe.

Pond 1 Outside Slope and Toe

The outside slope and toe area were observed to be generally vegetated with recently cut grass and weeds. A relatively large berm of a material, determined to be bottom ash and coal residuals, was observed on the outside slope of the perimeter dike on the southwest side of Pond 1, next to the Missouri River. MidAmerican plans to remove material and place it within Pond 1after permits are obtained from the U.S. Army Corps of Engineers and the Iowa Department of Natural Resources.

Pond 1 Outside Slope Photos:
Northwest perimeter dike embankment: 1.3
Northeast cross dike embankment: no photo (see 1.16 for inside slope)
Southwest perimeter dike embankment: 1.5-1.7, 1.10
Southeast perimeter dike embankment: 1.11, 2.8, (4.9, 4.12 in toe area beyond toe access road)

No obvious signs of slumps, slides, bulges, tension cracks, seepage, or animal holes were observed in the outside slope. Many trees, brush, and other woody vegetation appeared to have recently been removed from the outside slope and berm along the southwest side. No major erosion was observed.

Pond 1 Inside Slope and Basin Area

The inside slope, particularly around the northwest part of Pond 1, was observed to be generally buried with boiler slag/bottom ash. The northwest side is where boiler slag is sluiced into the pond (see Photo 1.1). Electronically controlled gate valves at the splitter structure (see Photo 1.3) divert the boiler slag discharge to Pond 1 and ash to Pond 2.

Pond 1 Inside Slope Photos:
Northwest perimeter dike embankment: 1.2
Northeast cross dike embankment: 1.16
Southwest perimeter dike embankment: 1.4, 1.8, 1.12
Southeast perimeter dike embankment: 1.14, 1.15

The southeast half of the pond interior has an irregular surface and appeared to have been recently excavated in areas to remove boiler slag/ash for sale or for disposal in a nearby ash landfill. The lowest area in the southwest part of the basin was observed to have ponded water at shallow depth and scrubby vegetation growing on high spots in and around the ponded water. A large stockpile of crushed stone and stockpiles of screened boiler slag were observed on the northeast part of the pond interior. The inside bank slope is generally bare on the southwest side (see Photo 1.12).

Pond 1Abutments and Groin Areas

The perimeter dike around Pond 1 does not tie-in to natural abutments but continues on to bound the northwest and southeast sides of Pond 2. Thus, the perimeter dike has no abutments and the only groins at Pond 1 are those formed where the northeast cross dike ties-in to the perimeter dike at each end of the cross dike. The groins at each end are buried with CCW, although an access ramp into Pond 1 exists in the groin area at the southeast end of the cross dike (see Photo 1.16).

5.1.2 Outlet Structures

Pond 1 Overflow Structure

There is no outfall structure. Bottom ash effluent is pumped into Pond 1 about 1.5 hours per day.

Outlet Conduit

There is no outlet conduit. According to MidAmerican staff, the original outfall structure that discharged to the outlet channel is plugged with concrete.

Pond 1 Emergency Spillway (If Present)

There is no emergency spillway.

Pond 1 Low Level Outlet

There is no low level outlet.

5.2 POND 2

5.2.1 Embankment Dam and Basin Area

Pond 2 Crest

The perimeter dike crest along the northwest side of Pond 2 has a surface consisting of compacted ash material, which is generally free of vegetation in higher-traffic areas and has light vegetation where there is less traffic. The more heavily used crest roadways on the southeast-side perimeter dike and on the cross dikes are broader and have a granular surfacing of what appeared to be coarse ash material.

Pond 2 Crest Photos:
Northwest perimeter dike embankment: 2.3, 2.5 (southwest end)
Northeast cross dike embankment: 3.29
Southwest cross dike embankment: 1.16 (from Pond 1 side)
Southeast perimeter dike embankment: 2.6

No major depressions, sags, significant tension cracks or other signs of significant settlement or mass soil movement were observed on the Pond 2 crest. One minor linear crack was observed in the crest near the top of the outside slope of the perimeter dike on the southeast side, but close observation showed it was associated with a tire rut where a heavy truck got too close to the edge of the crest.

Pond 2 Outside Slope and Toe

The outside slope and toe area along the northwest-side perimeter dike was observed to have a relatively well-maintained vegetative cover of grass and weeds. The outside slope and toe area along the southeast-side perimeter dike was observed to have sparse vegetation, apparently due to recent clearing operations. The southeast-side outside toe area is adjacent to the outlet channel that extends to the outfall at the river.

Pond 2 Outside Slope Photos:
Northwest perimeter dike embankment: 2.5
Northeast cross dike embankment: no photo (see 3.29 for crest)
Southwest cross dike embankment: 1.16 (from Pond 1 side)
Southeast perimeter dike embankment: 2.7, 2.9 (in-part, near side in photo), 2.11

No obvious signs of slumps, slides, bulges, tension cracks, seepage, or animal holes were observed in the outside slope. Trees, brush, and other woody vegetation appeared to have recently been removed from the outside slope and toe area along the southeast side. No major erosion was observed.

Pond 2 Inside Slope and Basin Area

The inside slopes of Pond 2 are generally buried with ash deposits. The majority of the Pond 2 area was observed to be dry; the southeast half was in the process of being excavated to restore storage volume and will receive effluent in the future. Only the upper third (northwest part) has effluent inflow (see Photos 2.2, 2.4, 2.15). The fly ash deposits in the area of the effluent discharge pipes were observed to be solidified into sedimentary rock-like layers (see Photo 2.16). An interior access road was observed inside the northwest side of the pond (see Photo 2.1); this road leads to the current location of the northeast cross dike. Water discharges through culverts under the northeast cross dike (see Photo 2.14) to the northeast area of Pond 2 (see Photo 2.13) and on through the discontinuous former northeast cross dike to Pond 3A.

Pond 2 Inside Slope Photos:
Northwest dike embankment: 2.1 (inside access road to cross dike), 2.3 (linear ash mound covers former inside slope; similar to 3.22)
Northeast cross dike embankment: 2.14 (twin 24-inch diameter culverts flow through cross dike to NE part of Pond 2 and on through discontinuous former NE dike to Pond 3A).
Southwest dike embankment: no photo (see 1.16 for Pond 1 side of cross dike)
Southeast dike embankment: 2.6 (inside slope at upper left corner of photo)

Ash material was observed to have been piled up along the inside edge of the crest on the northwest side of Pond 2 (and Pond 3) giving the appearance of a higher berm (see Photo 2.3).

Pond 2 Abutments and Groin Areas

The perimeter dike around Pond 2 does not tie-in to natural abutments; the groin areas where the cross dikes tie-in to the perimeter dike are buried with ash deposits.

5.2.2 Outlet Structures

Pond 2 Overflow Structure

There is no overflow structure.

Pond 2 Outlet Conduit

Water in Pond 2 flows through two 24-inch culverts under the northeast cross dike to the original northeast area of Pond 2; these operational culverts were not viewed closely. From the culverts the outfall path for water from Pond 2 is overland flow into Pond 3A, as shown by the attached Neal North Map Picture Index. The path can change as the Plant switches cells within the ponds to allow for excavation of the bottom ash and C-Stone.

According to MidAmerican staff, the original outfall structure that discharged to the outlet channel is plugged with concrete.

Pond 2 Emergency Spillway (If Present)

There is no emergency spillway.

Pond 2 Low Level Outlet

There is no low level outfall.

5.3 POND 3A

5.3.1 Embankment Dam and Basin Area

Pond 3A Crest

The perimeter dike crest along the northwest side of Pond 3A has a surface consisting of compacted ash material with light vegetative cover. Like the crest at Pond 2, the more heavily used crest roadways on the south-side perimeter dike and on the cross dikes are broader and have a granular surfacing of what appeared to be coarse ash material.

Pond 3A Crest Photos:
Northwest perimeter dike embankment: 3.19, 3.21-3.23 (3.23 in-part Pond 2)
Northeast cross dike embankment: 3.1 (from Pond 3B South side)
Southwest cross dike embankment: 3.29 (noted as Pond 2 NW crest, same cross dike)
Southwest side offset perimeter dike segment (near SE corner): 2.10, 2.12
South perimeter dike embankment: 3.26, 3.27 (partial view from outside swale)

No major depressions, sags, tension cracks or other signs of significant settlement or mass soil movement were observed on the Pond 3A crest.

Pond 3A Outside Slope and Toe

The outside slope and toe area along the northwest-side perimeter dike was observed to have a relatively well-maintained vegetative cover of grass and weeds. There is no actual slope on the south side of Pond 3A; this area is occupied by a drainage swale between Pond 3A and the adjacent landfill slope that extends up to the southeast; it was observed that the swale area had been recently graded and a new cover of grass was being established, as part of the landfill capping project recently completed. The 48-inch diameter culvert to the outlet channel from the outlet at Pond 3B South is buried under the swale area. The outside slope and toe area along the short southwest-side offset segment of the perimeter dike was observed to have sparse vegetation, apparently due to recent construction operations (see Photo 2.10). The southwest-side perimeter dike segment outside toe area is at the head of the outlet channel, where the 48-inch diameter culvert discharges into the channel (see Photo 4.9).

Pond 3A Outside Slope Photos:
Northwest perimeter dike embankment: 3.19
Northeast cross dike embankment: 3.1 (Pond 3B South side)
Southwest cross dike embankment: no photo
South perimeter dike embankment: 3.27 (no actual slope; only drainage swale)
Southwest-side offset perimeter dike segment (near SE corner): 2.10, 2.12

No obvious signs of slumps, slides, bulges, tension cracks, seepage, or animal holes were observed in the outside slope. Trees, brush, and other woody vegetation appeared to have recently been removed from the outside slope and toe area along the southwest-side offset perimeter dike segment. No major erosion was observed. One minor erosion gully in the slope was observed to have recently been repaired with clay fill (see Photo 2.12).

Pond 3A Inside Slope and Basin Area

Pond 3A was observed to have the largest pool of water of all the ash ponds at NNEC. The pool of water occupies most of the basin area (see Photos 3.24 and 3.30), except in the northwest part where ash deposits have accumulated and where ash formerly was mounded along the inside edge of the northwest-side crest above the crest elevation (see Photos 3.19 through 3.22). Thus, the inside slopes of Pond 3A are generally covered with water or buried with ash deposits. The ash deposits were observed to contain some C-stone fragments (see Photo 3.31). In addition to the sluiced discharge received from Pond 2, Pond 3A occasionally receives discharge from an ash sluice pipe located over the northwest side (see Photo 3.32), near juncture with northeast part of Pond 2. The exposed upper part of the inside slope above water level on the south side was observed to have been recently graded and was generally bare with no vegetative cover at the time of the site visit (see Photo 3.25).

Pond 3A Inside Slope Photos:
Northwest perimeter dike embankment: no photo (slope covered with ash mound)
Northeast cross dike embankment: 3.30 (in distance across pond of water)
Southwest cross dike embankment: 3.29 (slope obscured in view), 3.24 (just inside cross dike and offset perimeter dike segment (note solidified fly ash)
South perimeter dike embankment: 3.25, 3.28

No slumps, slides, or other signs of shear failure were observed in the visible parts of the slopes above the water level. No significant erosion was noted.

Pond 3A Abutments and Groin Areas

The perimeter dike around Pond 3A does not tie-in to natural abutments; the groin areas where the cross dikes tie-in to the perimeter dike are buried with ash deposits at their northwest ends. No erosion was observed in the groins where the southeast ends tie-in to the south-side perimeter dike.

5.3.2 Outlet Structures

Pond 3A Overflow Structure

There is no overflow structure.

Pond 3A Outlet Conduit

There is one 24-inch diameter CIP culvert that discharges through the northeast cross dike into Pond 3B South, located within about 30 feet of the Pond 3B South outfall structure (Photo 3.1). In addition, there is a temporary outlet pipe through the very bottom of the southwest-side offset perimeter dike segment that has a valve operator at the inside edge of the crest. MidAmerican staff indicated that a temporary permit had been obtained to discharge from Pond 3A directly to the outlet channel, apparently to drop the water level in Pond 3A as low as possible during grading work on the inside slope along the south side of the pond. The visible parts of the pipes appeared sound.

Pond 3A Emergency Spillway (If Present)

There is no emergency spillway.

Pond 3A Low Level Outlet

There is no low level outlet.

5.4 POND 3B North

5.4.1 Embankment Dam and Basin Area

Pond 3B North Crest

The narrow perimeter dike crest along the northwest and northeast sides of Pond 3B North has a cover of short grass. The more heavily used crest roadways on the crests of the southwest and southeast cross dikes are broader and have a granular surfacing of what appeared to be coarse ash material.

Pond 3B North Crest Photos:
Northwest perimeter dike embankment: 3.16, 3.17
Northeast perimeter dike embankment: 3.10
Southwest cross dike embankment: no photo
Southeast cross dike embankment: 3.11 (left edge of photo)

No major depressions, sags, tension cracks or other signs of settlement or mass soil movement were observed in the Pond 3B North Crest.

Pond 3B North Outside Slope and Toe

The outside slope and toe area along the northwest-side and northeast-side perimeter dike was observed to have a well-maintained grass cover (see Photos 3.14 through 3.16).

Pond 3B North Outside Slope Photos:
Northwest perimeter dike embankment: 3.16, 3.17
Northeast perimeter dike embankment: 3.8, 3.14, 3.15
Southwest cross dike embankment: no photo (partly visible to far left in Photo 3.30)
Southeast cross dike embankment: in distance in Photos 3.1, 3.5, 3.7

No obvious signs of slumps, slides, bulges, tension cracks, or animal holes were observed in the outside slope. However, holes were observed in the outside slope surface several feet (vertically) below the crest in the area of suspected seepage erosion through the northeast-side perimeter dike (see Photo 3.8). An animal hole was noted in the ash mound above crest level on the northwest side. No major surface erosion was observed.

Pond 3B North Inside Slope and Basin Area
The perimeter dike inside slope is generally buried with ash deposits, except along the southeast part of the perimeter dike on the northeast side, which is partially exposed above ash level in the pond. There is a linear mound of ash material up to 10 feet high above the dike crest elevation along the inside edge of the perimeter dike crest on the northwest side (see Photos 3.16 and 3.19) and partly on the northeast side, northwest end.

Pond 3B North is the northerly half of Pond 3 B. The southwest part (less than half) of Pond 3B North currently receives sluiced ash from Boiler Unit 3; the sluice water ponds at the lower, southeast end and the ash builds up at the northwest end, where ash is discharged into the pond (see Photo 3.18). The northeast part of Pond 3B North is currently diked off and in the process of being excavated to restore storage volume; the southeast end of this part has been excavated, and vegetation is becoming established on the bottom (see Photo 3.11). A buffer of 50 or 60 feet has been maintained between the excavation and the perimeter dike where apparent seepage erosion holes were observed in the outside slope.

Pond 3B North Inside Slope Photos:
Northwest perimeter dike embankment: 3.18 (covered with ash in foreground)
Northeast perimeter dike embankment: 3.10, 3.13
Southwest cross dike embankment: 3.11 (far dike)
Southeast cross dike embankment: 3.11 (near dike to left), 3.12 (far dike)

In the visible parts of the inside slopes above ash level no obvious signs of slumps, slides, bulges, tension cracks, or animal holes were observed (see Photos 3.10 through 3.13). No significant erosion was observed.

Pond 3B North Abutments and Groin Areas

The perimeter dike around Pond 3B North does not tie-in to natural abutments; the groin areas where the cross dikes tie-in to the perimeter dike are generally buried with ash deposits.

5.4.2 Outlet Structures

Pond 3B North Overflow Structure

There is no overflow structure.

Pond 3B North Outlet Conduit

Ash Pond 3B North discharges through a 24-inch diameter CIP culvert through the southeast cross dike into Ash Pond 3B South (discharge end visible in far cross dike in Photo 3.1). This operational pipe was not viewed closely.

Pond 3B North Emergency Spillway (If Present)

There is no emergency spillway.

Pond 3B North Low Level Outlet

There is no low level outlet.

5.5 ASH POND 3B South

5.5.1 Embankment Dam and Basin Area

Pond 3B South Crest

The perimeter dike crest along the south and northeast sides of Pond 3B South has a surface consisting of compacted ash or soil material with light vegetative cover or bare. The more heavily used crest roadways on the crests of the southwest and northeast cross dikes are somewhat broader and have a granular surfacing of what appeared to be coarse ash material.

Ash Pond 3B South Crest Photos:
Northwest cross dike embankment: 3.11 (partial view to left)
Northeast perimeter dike embankment: 3.7 (to right)
Southwest cross dike embankment: 3.1
South perimeter dike embankment: 3.2, 3.4, 3.6

No major tension cracks or other signs of soil shear value were observed. However, a noticeable low section of the crest was observed along the south perimeter dike section (see Photo 3.5) and extending around to the northeast side.

Pond 3B South Outside Slope and Toe

The outside slope and toe area along the south-side perimeter dike was observed to have sparse or spotty vegetation, apparently due to recent clearing operations (see Photo 3.4). A good grass cover was observed on the outside slope and toe area of the northeast-side perimeter dike (see Photo 3.9).

Pond 3B South Outside Slope Photos:
Northwest cross dike embankment: 3.11 (inside slope to Pond 3B North)
Northeast perimeter dike embankment: 3.9
Southwest cross dike embankment: 3.30 (in distance)
South perimeter dike embankment: 3.3, 3.4

No obvious signs of slumps, slides, bulges, tension cracks, seepage, or animal holes were observed. No active erosion was observed along the toe swale on the northeast side. No major erosion was observed. A couple of minor erosion gullies in the slope were observed to have recently been repaired with clay fill (see Photo 3.3 for one). Wet soil conditions were observed along the outside toe of the south-side perimeter dike, which is situated in relatively close proximity to the channel leading from the oxbow lake to the inlet of the 48-inch diameter box culvert.

Pond 3B South Inside Slope and Basin Area

Pond 3B South, which serves as a “polishing pond,” was observed to have a recently lowered pool of water. The pool of water occupies practically all of the basin area (see Photos 3.1 and 3.5) even at the lowered level. Thus, the lower part of the inside slopes of Pond 3B South is normally below water level in the pond. The exposed upper part of the inside slopes above the former higher water level around the pond was observed to have a generally sparse vegetative cover (see Photos 3.1, 3.6, and 3.7). A blanket of small stone was observed on the inside slope in the vicinity of the access bridge to the new stop-log structure and onto a low spot on the crest (see Photo 3.2).

Pond 3B South Inside Slope Photos:
Northwest cross dike embankment: 3.1 (in distance)
Northeast perimeter dike embankment: 3.7
Southwest cross dike embankment: 3.1
South perimeter dike embankment: 3.5, 3.6

No slumps, slides, or other signs of shear failure were observed in the visible parts of the slopes above the water level. No significant erosion was noted, although some minor wave erosion was noted along the previous higher operating water level; in addition, the inside slope surface of the southwest-side cross dike is locally eroded where the culvert discharges into Pond 3B South from Pond 3A (see Photo 3.1).

Pond 3B South Abutments and Groin Areas

The perimeter dike around Pond 3B South does not tie-in to natural abutments; no erosion was noted in the groins where the cross dikes tie-in to the perimeter dike.

5.5.2 Outlet Structures

The outfall path from Pond 3B South starts at the new stop-log structure shown in Photo 4.1. A skimmer box surrounds the overflow section and is fitted with a staff gauge (see Photo 4.2). From an adjustable 4-foot wide stop-log weir (see Photo 4.3) flow enters the structure and discharges through a 24-inch RCP pipe in the bottom of the structure to a wet well (see Photo 4.4, interior view) at the crest of the dike.

From the wet well the water discharges through another 24-inch RCP, which connects underground to a 48-inch diameter RCP (see Photo 4.5 for general location). The 48-inch pipe also receives drainage from a channel from the oxbow lake (see Photo 4.6). The inlet and outlet ends of the 1,650-foot long, 48-inch culvert were observed to be in good visual condition and appeared to be in sound condition (see Photos 4.7 through 4.10). Then the discharge from the 48-inch culvert daylights into the 1,200-foot long swale (see Photos 4.9 and 4.12), including a 50-foot section where the water is channeled through a 48-inch aluminum CMP (see Photo 4.11), then to the final outfall structure (see Photo 4.12) that discharges into the Missouri River (see Photos 4.12 through 4.14). At the final outfall structure, water flows over a 3-foot wide rectangular weir (see Photo4.13), then into a 48-inch RCP culvert (see Photo 4.14) discharging into the Missouri River. The discharge channel was observed to be open and free-flowing with no obstructions or bank failures. The visible parts of aluminum culvert and the final outfall structure were observed to be in good visual condition and appeared sound and serviceable.

Pond 3B South Overflow Structure

The overflow structure is the new stop-log structure located at the southwest corner of Pond 3B South (see Photos 4.1 through 4.3); the overflow structure and access bridge were observed to be in very good visual condition and appeared sound and serviceable. The wet well located at the south-side perimeter dike crest was in good visual condition (see Photo 4.4). MidAmerican staff explained that CO_2 is added to the discharge water at the wet well to maintain a pH value near 8.0.

Pond 3B South Outlet Conduit

The 24-inch diameter outlet pipes between the stop-log structure and the wet well and between the wet well to the 48-inch diameter outfall culvert are buried and could not be viewed.

Pond 3B South Emergency Spillway (If Present)

There is no emergency spillway.

Pond 3B South Low Level Outlet

There is no low level outlet.

6.0 HYDROLOGIC/HYDRAULIC SAFETY

6.1 SUPPORTING TECHNICAL DOCUMENTATION

6.1.1 Floods of Record

The three ash ponds are totally contained within perimeter dikes and do not receive off-site natural drainage. Therefore, they do not receive flood inflows from off-site. The source of water into the ponds, aside from sluicing and plant drainage, is precipitation that falls directly into the basins. Historic climate data available on-line from the High Plains Regional Climate Center indicate that the record 24-hour (1 day) precipitation in the area (Omaha Eppley Airfield) was 6.46 inches on August 7, 1999 for the period of record 1948 to 2010. This record holds also for the period of record 1871 to 2010 for the Omaha area in the NOAA Online Weather Data.

Hearsay evidence from MidAmerican personnel is that, during a major flood event along the Missouri River in1992, overland flooding was observed to extend miles to the southwesterly side of the Missouri River. However during the 1992 flood (which was the flood of record on the Missouri), there was no damage to the NNEC ash ponds.

6.1.2 Inflow Design Flood

The ash ponds at the NNEC do not receive uncontrolled inflows from off-site. MidAmerican staff stated that the NNEC plant is designed to be protected against the 100-year (1% annual chance) flood.

For ash ponds that are totally contained within a perimeter dike system, such as the ash ponds at the NNEC, safe containment of water within the basins is provided by maintaining sufficient freeboard to contain 100 percent of design precipitation over the pond areas.

Based on the Small Size Classification and Low Hazard Potential Classification assigned to all of the ash ponds (see Section 2.2 of this report), the “spillway design flood” (SDF) is one with a probable recurrence interval of 50 years to100 years (2% to 1% annual chance), according to USACE ER 1110-2-106 (September 26, 1979). By Iowa Department of Natural Resources´ “Design Criteria and Guidelines for Iowa Dams” (December 1990), for “low hazard dams” not classified as “major structures,” the design rainfall (R_D) = P100 + 0.12 (PMP – P100). From “Iowa Precipitation Frequencies” (1988): P100 = 6.3 inches (24-hour duration); PMP = 31.5 inches (all season, 24-hour duration, 10 sq. mi.); and R_D = 9.3 inches, which is within the USACE criterion; this design rainfall can be taken as the design “inflow” that the ash basins should safely accommodate. However, for this report the site ponds are also approximately checked against the

intermediate size classification, which includes an analysis up to the ½ probable maximum flood (1/2 PMF) (see Table 6.1). The intermediate size classification might apply in the highly unlikely event of all the ponds failing simultaneously. The approximate assessment discussed in Section 6.3 and summarized in Table 6.1 examines these three storm events simulated as inflow rain volume falling directly into the ponds with no discharge. This would equate to the depth of rainfall within each pond, as follows:

1) one hundred year event, P100 = 6.3 inches (0.53 feet),
2) the Iowa DNR design rainfall equation = 9.3 inches (0.77 feet), and
3) the ½ PMP rainfall = ½ (31.5) inches = 15.75 inches (1.31 feet).

6.1.3 Spillway Rating

No spillway rating was provided for the outlet works at Pond 3B South. This is the only outfall discharge point for all the ash ponds at NNEC. However, no outfall is assumed in the assessment in Section 6.3.

6.1.4 Downstream Flood Analysis

No downstream flood analysis has been provided by NNEC staff for the ash ponds. A qualitative analysis based on field observations and review of available data, and assuming failure by overtopping and subsequent breaching of the perimeter dike embankment, is as follows:

Failure of the perimeter dike at Pond 1 would discharge water directly into the Missouri River along with some boiler slag/bottom ash eroded and transported with water flowing through the breach. The failure would not likely cause loss of life, but could cause some environmental damage.

Failure of the perimeter dike on the southeast side of Pond 2 would discharge water and some bottom ash and any un-solidified fly ash into the adjacent discharge channel, which leads to the Missouri River; much of the ash material would be deposited in the outlet channel and some would likely reach the river. Beecause of the high linear mound of ash piled along the northwest edge of the pond, overtopping failure in that direction is not likely. However, a failure through the perimeter dike on the northwest side due to other causes, e.g., embankment or foundation soil shear failure or internal erosion (piping) failure as a result of seepage through the embankment or foundation soils, could potentially release water and some CCW into a low area between the pond and the coal pile, which would drain toward the Missouri River. Failure of the Pond 2 perimeter dike would not likely cause loss of life, but would cause some environmental damage and potential minor economic damage to MEC property.

Depending on location around Pond 3, failure of the perimeter dike would discharge water and bottom ash and any un-solidified fly ash directly into the discharge channel leading to the Missouri River at the dike segment on southwest side of Pond 3A, or directly into the oxbow lake or channel inlet to the 4-foot diameter culvert along the dike segment around 3B South, or onto MEC property and potentially onto a nearby industrial property along the dike segment around Pond 3B North, or onto MEC property along the dike segment on the northwest side of Pond 3A. Because of the internal dikes, a breach failure at any one location along the perimeter dike would not suddenly release all the water in the pond(s) or expose all the CCW in Pond 3 to potential erosion and transport with water released through a breach. The failure would not likely cause loss of life, but would cause some environmental damage and potential minor economic damage to MEC property and possibly to industrial property on the northeast side of Pond 3B North.

Estimating the Missouri River Flood-Stage Frequencies

From the 1991 FEMA Flood Insurance Rate Maps (FIRMs) and the FEMA Flood Insurance Study (FIS), flood frequency elevation estimates have been determined by Dewberry staff. The NNEC site is adjacent to the FEMA FIRM river cross sections G-G and H-H. The 1991 FEMA FIS profiles provide the following peak Missouri River elevations:

10-year Profile = 1070.0
100-year Profile = 1073.0
500-year Profile = 1076.4

As noted in the HWS report, Section D2-D2 through the outside original dike toe elevation of Ash Pond 1 is at 1075.0 feet. The 100-year event for the Missouri River is below the Pond 1 dike toe elevation, but the 500-year event would encroach onto the outer slope of the perimeter dike at Pond 1 1.4 feet. The FIS report does not estimate any storm events greater than the 500-year flood elevation.

6.2 ADEQUACY OF SUPPORTING TECHNICAL DOCUMENTATION

No hydrologic/hydraulic analyses have been provided for the ash ponds. However, for purposes of this assessment rigorous analyses are not needed for evaluation of hydrologic safety of these basins, which are totally contained within perimeter dike systems and do not receive off-site drainage. Simple calculations as discussed in the following section are sufficient.

6.3 ASSESSMENT OF HYDROLOGIC/HYDRAULIC SAFETY

Heavy Rainfall on Zero-discharge Ash Ponds

Calculations of the approximate amount of freeboard available in all the NNEC ash ponds under the given rainfalls falling on the ponds with zero discharge have been

performed. These calculations assume that the pool levels are at the maximum operating water levels just prior to the rainfall events and that the ash surfaces have not built-up above the maximum operating water levels. The resulting available freeboard for each of the NNEC ash ponds is shown in Table 6.1.

Table 6.1: Severe Rainfall Events-NNEC Ash Pond Freeboard

Pond	Maximum Operating Water Level (elev-feet)	Minimum Top of Dike (elev-feet)	Three Severe Rain Events (24-hr duration)		
			100-Year Freeboard (feet) P = 6.3 inches	IA DNR Freeboard (feet) P = 9.3[1] inches	½ PMP Freeboard (feet) P = 15.75 inches
Pond 1	1078.5	1085	6.0	5.7	5.2
Pond 2	1082	1085	2.5	2.2	1.7
Pond 3A	1082	1085	2.5	2.2	1.7
Pond 3B North	1082	1085	2.5	2.2	1.7
Pond 3B South	1079	1082.9[2]	3.4	3.1	2.6
Pond 3B South	1079	1085[3]	5.5	5.2	4.7

[1]*Based on the Iowa DNR Equation 1 (R_D) = P100 + 0.12 (PMP – P100) = 9.3 inches (0.77 feet)*
[2]*Before repairs to the perimeter dike around Pond 3B South*
[3]*Following repairs to the perimeter dike around Pond 3B South*

Possibly a longer-duration rainstorm would be more appropriate for the ash ponds. For 72-hour duration the PMP (all season, 10 sq. mi.) for the site location is 36.5 inches and ½ PMP is 18.25 inches, or 2.5 inches more than for 24-hour duration. Thus, the available freeboard shown in the table for ½ PMP would be reduced by approximately 0.2 foot under the longer-duration storm, leaving a minimum freeboard of approximately 1.5 feet.

On the basis of the simple calculations and the stated assumptions, all the ash ponds appear to have sufficient flood storage capacity between maximum operating pool levels and the dike crest elevations to safely accommodate severe rainfall events, including the 100-year rainfall, the Iowa DNR equation, and the ½ PMP rainfall depths. Thus, the NNEC ash ponds appear to have adequate hydrologic safety, but ash management practices must be prudently exercised to ensure that adequate surcharge storage is always maintained to accommodate excess water from severe rainfall events.

7.0 STRUCTURAL STABILITY

7.1 SUPPORTING TECHNICAL DOCUMENTATION

7.1.1 Stability Analyses and Load Cases Analyzed

No stability analyses appear to have been performed for the perimeter dike during original design in the early 1970s. However, as previously mentioned, a recent geotechnical study was performed by HWS Consulting Group Inc. at the request of MidAmerican to assess the stability of the perimeter dike and evaluate the feasibility of raising maximum operating pool elevation up to 1082 feet from the original maximum operating pool elevation of 1078.5 feet for all the ponds; the results of that study are presented in the Geotechnical Engineering Report included in Appendix C - Doc 1.5. The field exploration program included Dutch friction-cone soundings, test borings, and soil sampling at 15 surveyed cross sections of the perimeter dike. A total of 25 borings were made to explore and establish the subsurface conditions at the various sections of the dike. Laboratory tests were performed on both disturbed and relatively undisturbed samples to determine classification and engineering properties and parameters of the ash, dike embankment fill, and foundation soils. The laboratory tests included determinations of: moisture content, dry density, grain size distribution, dispersion potential, unconfined compressive strength, triaxial shear strengths, and permeability coefficients by both constant-head and falling-head test methods. Six critical sections of the perimeter dike were selected for analyses including:

- Embankment and foundation stability against a shear failure (Slope Stability Analysis);
- Stability of the embankment against seepage uplift due presence of permeable foundation soils (Underseepage Analysis), and
- Potential for liquefaction during earthquakes (Liquefaction Potential Analysis).

One of the critical cross sections of the perimeter dike occurs at Pond 1 (Section E-E in the geotechnical report); one occurs at Pond 2 (Section G-G); one occurs at Pond 3A (Section B-B); one occurs at Pond 3B North (Section A-A); and two occur at Pond 3B South (Section H2-H2 and Section K2-K2).

In the slope stability analysis the case analyzed was static stability of the outside slope with full pond on the inside slope; analyses were performed for both “drained” shear strength and “undrained” shear strength of the soils in the section model. (The drained strength represents steady-state conditions, which is the usual case for this dike.) The Simplified Bishop Method of analysis was used to compute factors of safety against circular arc rotational failure using a computer

software application (GSSTABL7 v.2). The results are presented in Appendix G of the Geotechnical Engineering Report in Appendix C - Doc 1.5 and summarized in Subsection 7.1.4.

In the underseepage analysis the Gradient Safety Factor (GSF) was calculated to evaluate the potential for seepage uplift failure at the toe of the embankment; in the geotechnical report the formula is given as GSF = actual exit gradient/critical exit gradient; however, this is believed to be a typographical error, as the actual exit gradient should be in the denominator, i.e., GSF = critical exit gradient/actual exit gradient. (In other words the actual exit gradient must be less than the critical exit gradient in order for the factor of safety to be greater than 1.0.) The geotechnical report indicates that the methodology of Turnbull and Mansur (1961) was used to calculate the GSF. The GSF for the outside toe was calculated for the current profile with maximum operating pool level and for the proposed profile with ponds cleaned out and revised (generally lower) maximum operating pool level. The GSF for the inside toe was also calculated at applicable sections, assuming 100-year flood elevation on the outside slope with empty pond on inside. The critical exit gradient was taken as 0.92. The results are presented in Appendix H of the Geotechnical Engineering Report in Appendix C - Doc 1.5 and summarized in Subsection 7.1.4.

In the liquefaction potential analysis methods for evaluating liquefaction were taken from a paper title “Liquefaction Resistance of Soils: Summary report from 1996NCEER and 1998 NCEER/NSF Workshops on Evaluation of Liquefaction Resistance of Soils.” The factor of safety against liquefaction was computed from FS = CRR/CSR, where CRR is the Cyclic Resistance Ratio, which in this case was calculated using standard penetration test (SPT) results from the borings, and CSR is the Cyclic Stress Ratio, which was calculated based on the maximum horizontal earthquake acceleration, the ratio of the total vertical stress to the effective vertical stress at the level of each SPT, and a soil profile flexibility coefficient. A peak horizontal ground acceleration of 0.069g was used in the analysis, from USGS based on mean magnitude 5.87 (Richter) and mean return period of 4975 years (approximately equivalent to 2-percent probability of exceedance in 100 years). The results are presented in Appendix H of the Geotechnical Engineering Report and summarized in Subsection 7.1.4. (The liquefaction analysis results were furnished later and are included in Appendix D - Item 3 for reference, along with other information requested after the site visit.)

7.1.2 Design Properties and Parameters of Materials

Each of the 6 cross sections analyzed have multiple layers of embankment and alluvial foundation soils, as well as fly ash, unique to each section. The following Table 7.1 shows the range of design properties and parameters used in the analysis sections. Specific design data for each section are shown on the analysis sections contained in Appendix G of the Geotechnical Engineering Report in Appendix C - Doc 1.5.

Table 7.1: Range of Design Properties and Parameters of Materials used in Analyses

Material	Total Unit Wt. (pcf)	Saturated Unit Wt. (pcf)	Drained Strength Parameters		Undrained Strength Parameters	
			C´ (psf)	Ø´ (deg)	C (psf)	Ø (deg)
Fly Ash	100-95	100-95	0	20	1500	-
Fill-ML	120	120	100-50	28-26	1500	-
Fill-CL	112-132	112-132	100-50	32-25	2000-500	-
Fill-CH, CL-CH	120-130	120-130	75-100	30-32	1500-2000	-
Fill-SM, SP-SM	120	120	0	30	0	30
Alluv.-ML	120	120	100	28	1500	-
Alluv.-CL	120	120	75-0	30-25	1500-500	-
Alluv.-CH	110-116	110-116	75-0	30-25	1500-500	-
Alluv.-SP, SP-SM	120	120	0	32	0	32
Alluv.-SM	110	110	0	30	0	30

See analysis sections in Doc. 1.5 in Appendix C for source of information in this table.

7.1.3 Uplift and/or Phreatic Surface Assumptions

The phreatic surface or piezometric level in the embankment slope stability analysis sections appears to have been based on maximum operating pool level on the inside and a shallow groundwater level at the outside toe, or the water level in the adjacent river, or oxbow lake, or outlet channel, depending on section location, with piezometric level varying linearly through the embankment between the inside and outside water levels.

7.1.4 Factors of Safety and Base Stresses

The computed factors of safety for the various sections analyzed in the slope stability analyses are shown in the following Table 7.2.

Table 7.2: Slope Stability Factors of Safety (Static Loading Outside Slope)		
	Calculated Minimum Factor of Safety (FS)	
Location / Section	**Drained Condition**	**Undrained Condition**
Pond 1 / Section E-E	1.8	2.2
Pond 2 / Section G-G	1.5	2.7
Pond 3A / Section B-B	1.8	4.5
Pond 3B North / Section A-A	2.9	5.0
Pond 3B South / Section H2-H2	2.0	4.7
Pond 3B South / Section K2-K2	2.4	5.4

See analysis sections in Doc. 1.5 in Appendix C for source of information in this table.

The U.S. Army Corps of Engineers (USACE) recommended minimum FS criteria are 1.4 (drained) and 1.3 (undrained).

The computed gradient safety factors for the various sections analyzed in the underseepage analyses are shown in the following Table 7.3.

Table 7.3: Underseepage Analysis Gradient Safety Factors				
	Calculated GSF			
	Outside Toe		Inside Toe	
Location / Section	**Current**	**Proposed**	**Current**	**Proposed**
Pond 1 / Section E-E	0.6	1.6	7.1	2.0
Pond 2 / Section G-G	13.7	1.9	7.8	1.9
Pond 3A / Section B-B	9.2	12.1	N/A	N/A
Pond 3B North / Section A-A	11.6	2.9	N/A	N/A
Pond 3B South / Section H2-H2	2.0	1.7	5.2	5.2
Pond 3B South / Section K2-K2	1.0	1.7	3.2	3.2

See analysis sections in Doc. 1.5 in Appendix C for source of information in this table.

The USACE recommended minimum GSF criterion is 1.5.

The computed minimum factors of safety against liquefaction based on use of SPT data obtained in test borings at the various sections analyzed in the liquefaction potential analyses are shown in the following Table 7.4.

Table 7.4: Liquefaction Analysis Factors of Safety (SPT-Based)

Location / Section	Depth (feet)	N (blows/foot)	Calculated Minimum Factor of Safety (FS)
Pond 1 / Section E-E	25	5	2.88
Pond 2 / Section G-G	30	9	4.06
Pond 3A / Section B-B	25	9	2.78
Pond 3B North / Section A-A	25	10	4.62
Pond 3B South / Section H2-H2	20	4	1.59
Pond 3B South / Section K2-K2	25	10	3.07

See analysis sections in Doc. 1.5 in Appendix C for source of information in this table.

A minimum FS criterion of 1.5 was adopted by HWS for the Recent deposits found in test borings at the site.

Based on the results of their various engineering analyses, HWS recommended operating conditions for the ash ponds as shown in the following Table 7.5.

Table 7.5: HWS Recommended Ash Pond Operating Conditions

Ash Pond Designation	Maximum* Operating Pool Elevation (feet)	Minimum Pond Floor Elevation after Excavation (feet)
Pond 1	1078.5**	1074.0
Pond 2	1082.0	1072.5
Pond 3A	1082.0	1072.5
Pond 3B North	1082.0	1072.5
Pond 3B South	1079.0**	1074.0

**Assumes minimum top elevation of 1085.0 feet. **Below 1082.0 to satisfy minimum GSF.*

7.1.5 Liquefaction Potential

Liquefaction potential analyses were performed by HWS for the perimeter dike that impounds the ash ponds, as briefly described in Subsection 7.1.1, with essential results shown in the above table. On the basis the results of the HWS analyses it appears that the soils under the perimeter dike are not susceptible to liquefaction under a design peak horizontal ground acceleration of 0.069g.

7.1.6 Critical Geological Conditions and Seismicity

The ash ponds were developed on alluvial bottomlands next to the Missouri River. From descriptions in the HWS Geotechnical Engineering Report, of review of data from original subsurface exploration completed in 1960 prior to development of the property, the site soil profile generally consisted of a 2- to 8-foot thick upper cohesive layer underlain with sandy soils to significant depth. The upper cohesive layer was described as having relatively thin seams and beds of clays, lean clays, and clayey silts. Potential critical conditions often associated with cohesive alluvial soils are high compressibility and low shear strength, particularly if they are geologically Recent deposits. Potential critical conditions often associated with alluvial sands are loose or very loose relative densities and the potential for liquefaction and, with respect to impounding structures, high permeability and the potential for excessive underseepage or high exit gradients. From standard penetration testing in HWS' borings and unconfined compression testing of relatively undisturbed samples in the laboratory, the cohesive alluvial foundation soils encountered typically have a medium stiff to very stiff consistency and do not appear to be highly compressible; the sands typically have a medium dense relative density, but some loose layers and, rarely, very loose layers were encountered. However, the shear strength (stability), liquefaction, and underseepage potential issues have been addressed in HWS' engineering analyses, as previously discussed.

Seismicity – The site of the NNEC ash ponds is in an area of relatively low seismic hazard. Based on USGS Seismic-Hazard Maps for Central and Eastern United States, dated 2008, the NNEC ash ponds are located in an area anticipated to experience 0.04g peak ground acceleration with a 2-percent probability of exceedance in 50 years. The liquefaction analyses previously discussed presumed a stronger earthquake.

7.2 ADEQUACY OF SUPPORTING TECHNICAL DOCUMENTATION

The supporting technical documentation for structural stability is adequate. The methods used in the slope stability, underseepage, and liquefaction potential analyses are acceptable. Material properties and parameters and other assumptions used in the analyses appear to be reasonable and generally conservative.

7.3 ASSESSMENT OF STRUCTURAL STABILITY

Based on visual observations and review of the HWS Geotechnical Engineering Report, the structural stability of the perimeter dike appears adequate.

The outlet structure appears to be in sound and stable condition with no visual evidence of significant deterioration; it appears satisfactory for continued service.

8.0 ADEQUACY OF MAINTENANCE AND METHODS OF OPERATION

8.1 OPERATIONAL PROCEDURES

Basic operations at each of the ash ponds are outlined in Subsection 4.2.3 Current Operational Procedures. Since 1980-81, when fly ash management switched to dry disposal in a nearby ash monofill, the amount of coal combustion residue sluiced into the ponds on an annual basis was substantially reduced, particularly since coal-fired Units 2 and 3 burn pulverized coal, which produces more fly ash than bottom ash at a ratio of approximately 80 percent fly ash to 20 percent bottom ash on a weight basis. (For the small capacity Unit 1, which burns less-fine, crushed coal, the ratio is just the opposite at 20 percent fly ash to 80 percent bottom ash.) None of the coal combustion residue from the newest coal-fired unit (Unit 4) is sluiced into the ponds; the fly ash from this unit, which constitutes more than 85 percent of the coal combustion residue generated by this unit, is dried and sold, and the bottom ash is dried and sent to the ash monofill, although some of it is sold. Thus the coal combustion residue currently sluiced into the ponds is predominantly bottom ash and economizer ash; the amount of fly ash currently sluiced into the ponds (Ponds 2 and 3) is approximately 20 percent of the total. Ash management operations at the ponds are directed mainly toward temporarily storing the ash deposits as they accumulate in the ponds, excavating and hauling dried ash deposits from filled areas to the landfill (monofill), or selling the material for beneficial reuse, as necessary to restore storage volume, while monitoring and maintaining water quality within permit limits.

8.2 MAINTENANCE OF THE DAM AND PROJECT FACILITIES

MidAmerican maintains the perimeter dike that encloses the ash ponds as needed. It appeared that the perimeter dike receives basic maintenance to keep trees and woody vegetation off the dike embankment. The portions of the dike crest that are used for frequent vehicle traffic (e.g., access ways to landfills on southeast side of ponds) are maintained as roadways with granular surfacing. (The dike crest along these portions is much wider than called for by original design.) The crest along other portions that is closer to the design width of 10 feet (e.g., along northeast side of Pond 3B) is maintained with a grass cover, which had recently been mowed. A grass/weed cover is typically maintained on the outside slope of the perimeter dike, which had recently been mowed and was in relatively good condition, except along the outside slope of the perimeter dike at the offset near the south corner of Pond 3A, where the slope was generally bare. There was evidence in several locations on the outside slope and toe areas where small trees and brush had been recently removed. The inside slope, where it is not covered with settled ash deposits or mounded ash, is generally maintained with a grass/weed cover; during ash mining operations, the inside slope may be graded and exposed. No significant wave erosion was apparent on the inside slopes of the ponds with water in them. Part of the inside slope near the south corner of Pond 3A had recently been re-graded.

The ash pond perimeter dike is generally free of erosion, although there was evidence of recent repairs of minor erosion using clay fill at a couple of locations on the outside slope. MidAmerican personnel reported that an area of erosion occurred on the inside slope of the perimeter dike on the southwest side at Pond 1, near the sluice line outfall. The sluice line was redirected away from the upstream slope to prevent further erosion. It is understood from MidAmerican personnel that further investigation showed that the erosion was actually in ash material and had not extended into the embankment soil. The eroded area was not evident at the time of the site visit; the area appeared to have been buttressed with bottom ash (boiler slag).

The visible parts of the outlet works (including new stop-log structure and the wet well structure) at Pond 3B South appeared to be in very good repair. The reconstructed inside slope where the new segment of outlet pipe from the new stop-log structure had been installed is covered with a layer of small stone, apparently for protection of the new soil fill surface from erosion by wave action and surface runoff. The visible parts (inlet and outlet ends) of the culverts along the outlet channel and at the outfall to the Missouri River appeared to be in good repair.

Outside of routine maintenance, MidAmerican plans to repair the low perimeter dike embankment around much of Pond 3B South by placing compacted fill to raise the embankment back up to the design crest elevation of 1085 feet, as recommended by HWS. In addition, MidAmerican plans to implement remedial action recommended by HWS to repair holes in the outside slope surface on the northeast side near east corner of Pond 3B North, apparently caused by seepage erosion of silty and/or sandy embankment soils at that location. Laboratory “crumb” tests performed in HWS’ geotechnical study indicated that the tested soils were not dispersive, but an HWS geotechnical engineer is to observe the repair operation, further assess the nature and type of soils used in the original embankment construction, and determine the extent of dike reconstruction required in this area.

8.3 ASSESSMENT OF MAINTENANCE AND METHODS OF OPERATION

8.3.1 Adequacy of Operational Procedures

Current operational procedures at the ash ponds appear to be appropriate and adequate. The maximum operating pool elevations and minimum pond floor elevations recommended by HWS (see Table 7.1.4D) should be observed.

8.3.2 Adequacy of Maintenance

No major maintenance issues were observed during the site visit. Current maintenance of the perimeter dike and outlet works appears to be generally adequate. The bare outside slope of the perimeter dike at the offset near the south corner of Pond 3A should be protected by establishing a healthy stand of grass, or by placing a layer of small stone or riprap if the soil is too "droughty" to support a good grass cover.

9.0 SURVEILLANCE AND MONITORING PROGRAM

9.1 SURVEILLANCE PROCEDURES

The MidAmerican NNEC operating personnel inspect the perimeter dike system containing the ash ponds and the outlet works once per quarter. Documentation of these quarterly inspections through the use of a checklist form has recently been started. The checklist form is very similar to the checklist form used for field observations made in this assessment and included in Appendix B. Informal observations of conditions in and around the ash ponds are made by both operating and security personnel during the course of daily operations.

9.2 INSTRUMENTATION MONITORING

9.2.1 Instrumentation Plan

There is no permanent dam performance monitoring instrumentation in place in the perimeter dike embankments containing the ash ponds. A staff gauge has been installed on the steel baffle at the overflow structure to measure the water surface elevation in Pond 3B South. MEC plans to install a fixed staff gage in Pond 1 to allow visual monitoring to verify that the water level stays below the maximum water elevation of 1078.5 recommended in the HWS Geotechnical Engineering Report.

9.2.2 Instrumentation Monitoring Results

There are no permanent dam performance monitoring instruments and, thus, no results of dam monitoring.

9.2.3 Dam Performance Data Evaluation

Not applicable, since there are no permanent dam performance instruments.

9.3 ASSESSMENT OF SURVEILLANCE AND MONITORING PROGRAM

9.3.1 Adequacy of Inspection Program

The inspection program is generally substandard. The inspection program should be formalized and include at a minimum:

- Continuing quarterly inspections performed by plant operating personnel. The personnel performing the inspections should be familiar with the dike embankments and trained on what to look for in the field. Consider developing an inspection checklist form specific to the NNEC perimeter dike embankment at each pond and the outlet works.
- Annual inspections performed by an engineer familiar with the dike embankments and associated engineering data and particularly the recommendations given in the HWS Geotechnical Engineering Report. The annual inspections should be documented with a written inspection report, or checklist form, including evaluation, and recommendations as needed.
- Internal inspections of the outlet structure conducted every 5 years with a remote camera or by personnel using confined-space entry procedures. The results should be documented with a written inspection report.

9.3.2 Adequacy of Instrumentation Monitoring Program

There is no permanent dam performance monitoring instrumentation in place at the perimeter dike around the ash ponds. With exception of the lower than design crest elevation on the perimeter dike around much of Pond 3B South, there appear to be no other significant problem or suspect conditions observed in the field that might be reason for installation of permanent or temporary dam performance instrumentation. As previously mentioned, the low dike section at Pond 3B South occurs in an area that appears to have been in or on the margins of the oxbow lake, where soft compressible soils could occur or where the initial layers of embankment fill may have been placed in water. The test borings made by HWS appear to verify the presence of such soils in the deeper part of the embankment and to a lesser extent in the foundation; thus, the low dike crest could potentially have been the result of consolidation settlement and/or possibly progressive shear failure in the soft soils, particularly in the lower part of the embankment, which after 35 years may have stabilized. Nevertheless, after the dike is raised back up to the design elevation of 1085 feet, it would be prudent to install at least two temporary elevation monuments, one on the crest and one at the outside toe of the section where the lowest crest elevation occurred, and take elevations on the monuments monthly for 6 months after the initial elevation measurements, to assess whether settlement or subsidence re-initiates or continues after addition of the fill to finished grade; the monument at the toe would serve to check for heave in case of shear failure, although heave may not show in a progressive failure.

After 6 months the monitoring data would be assessed to determine if monitoring should continue for further evaluation or be terminated. Since the lowest dike section occurs near the outlet structure and because rejuvenated movement of the embankment earth fill could potentially have some impact on the outlet pipe, the elevation monitoring after restoring the dike crest elevation is considered a reasonable precaution.

DRAFT

EXHIBIT 1: REPRESENTATIVE DESIGN SECTION OF POND 1 PERIMETER DIKE EMBANKMENT

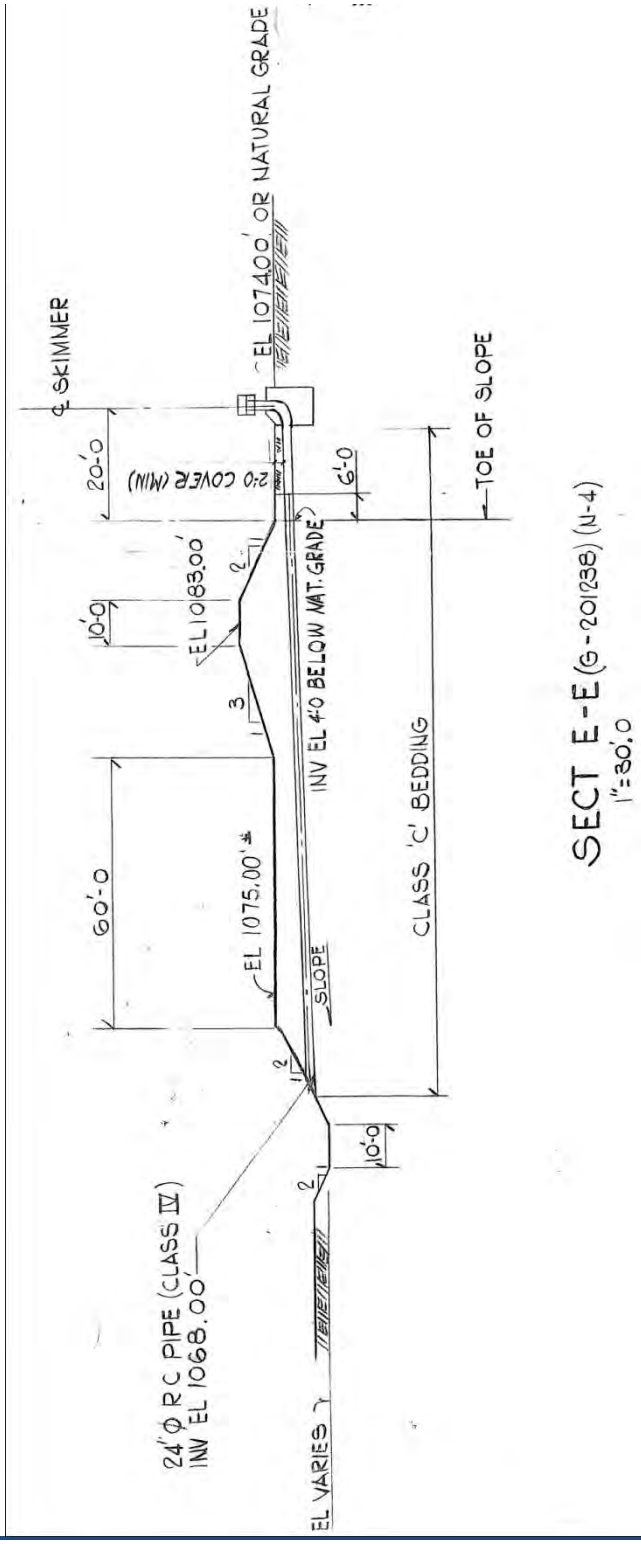

DRAFT

EXHIBIT 2: REPRESENTATIVE DESIGN SECTION OF POND 2 PERIMETER DIKE EMBANKMENT

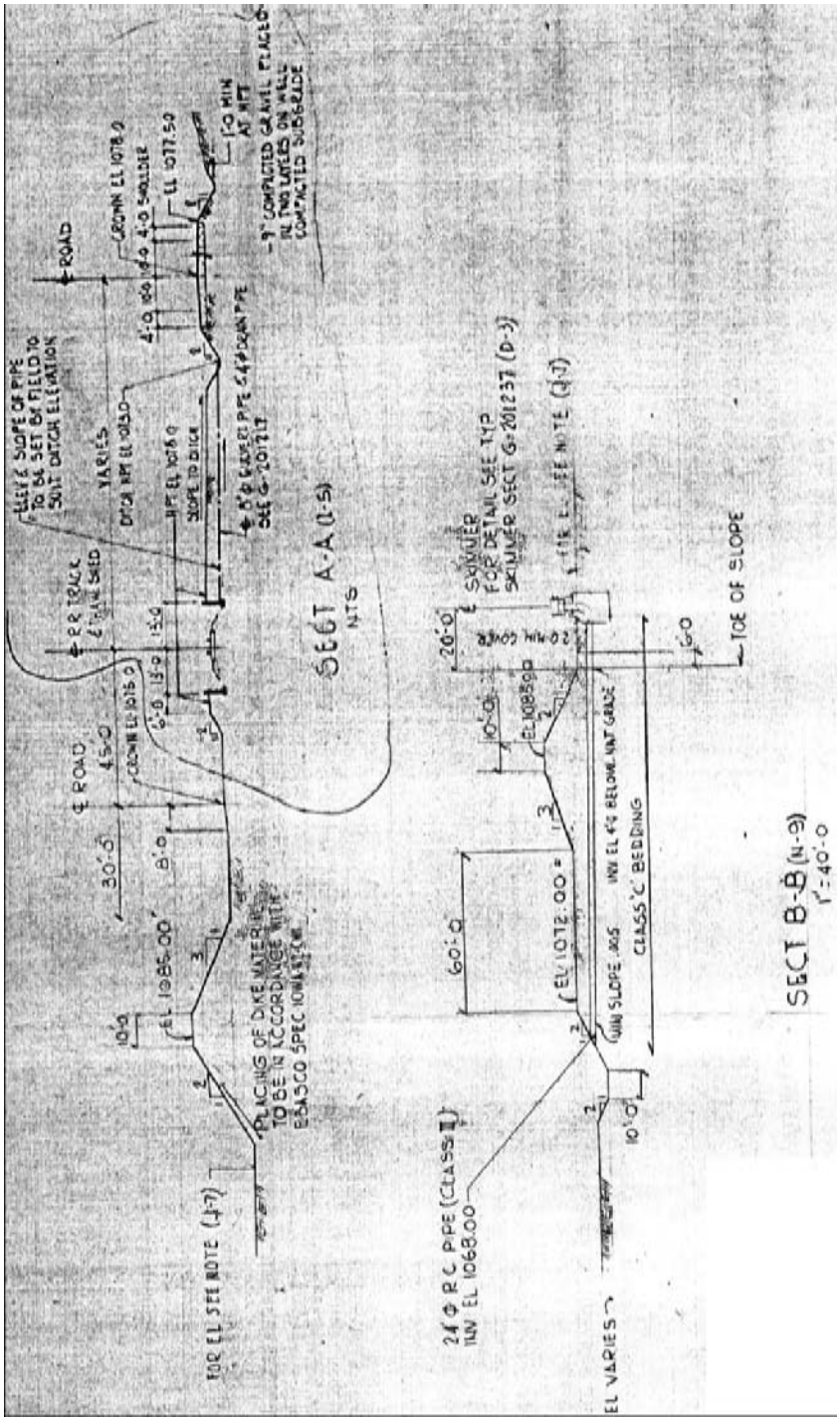

DRAFT

EXHIBIT 3: OUTLET STRUCTURE LAYOUT PLAN

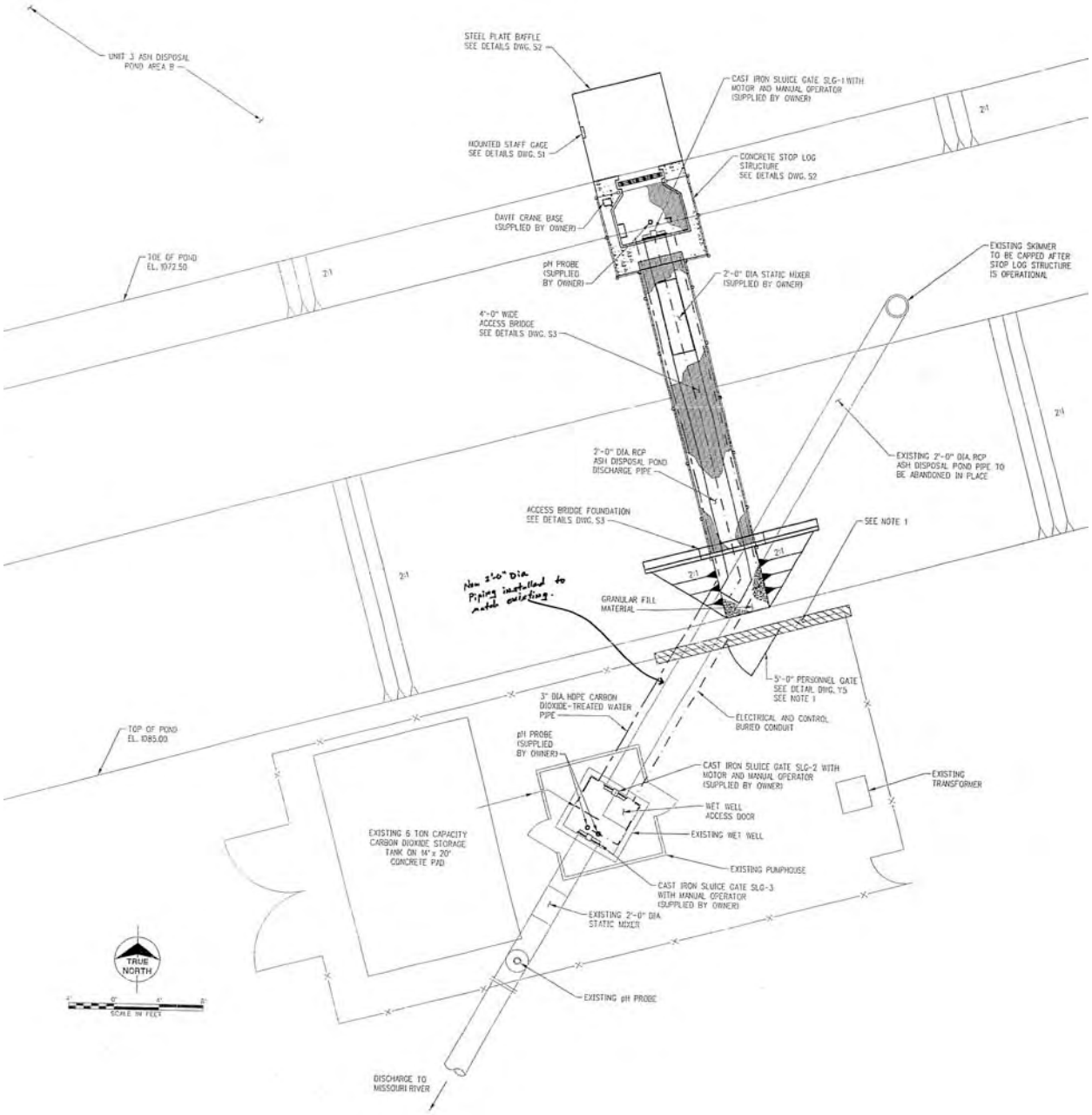

DRAFT

EXHIBIT 4: OUTLET STRUCTURE SECTION VIEW

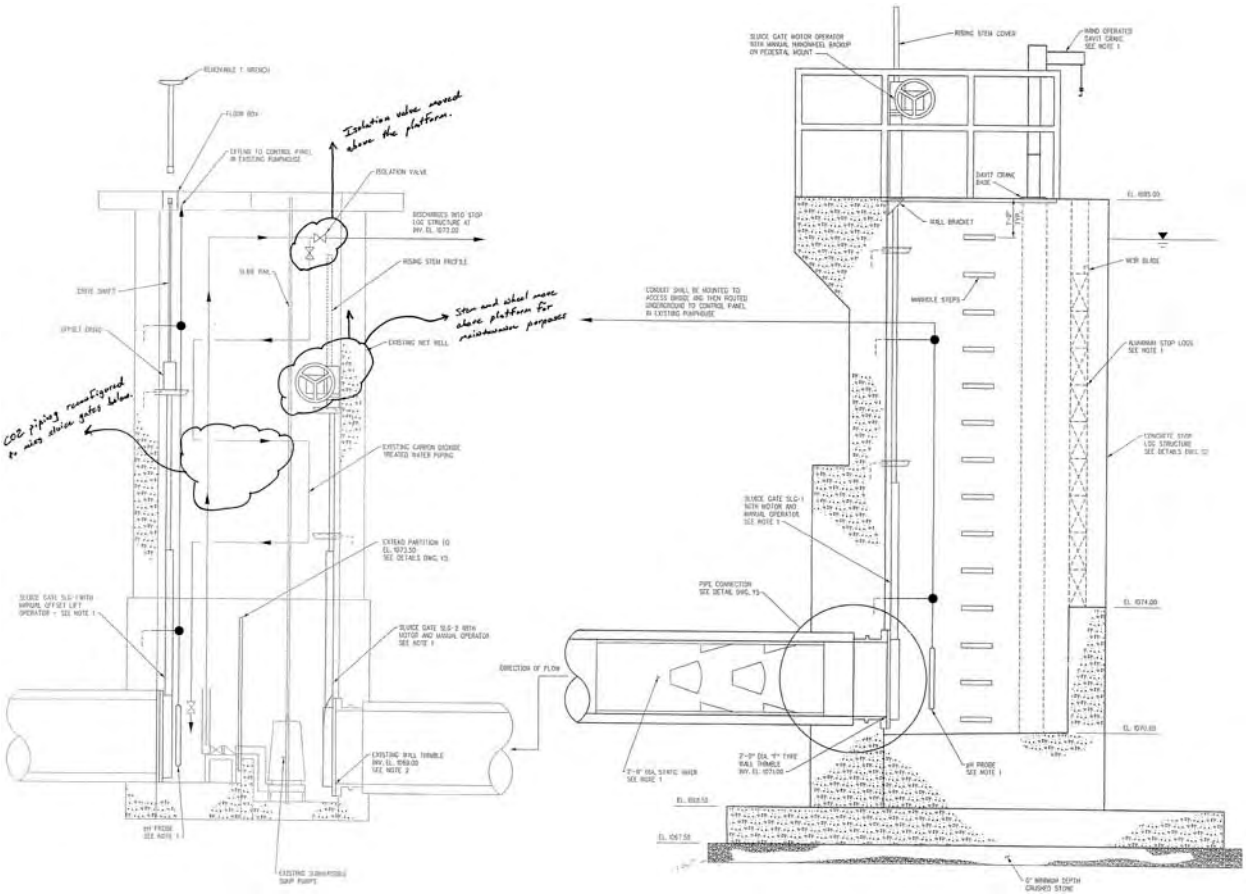

APPENDIX A

SITE VISIT PHOTOS

Neal North Energy Center
Photograph Map Index

Photo 1.1
Pond 1 discharge of bottom ash (only 1.5 hr/day inflow)

Photo 1.2
Pond 1 dike crest and inside slope (NW side viewed NE)

Photo 1.3
Pond 1 dike outside slope (NW side viewed N) and
flow splitting structure to Pond 1 and Pond 2

Photo 1.4
Pond 1 dike inside slope (SW side viewed SE)
-mounded ash is in area of former erosion

Photo 1.5
Pond 1 dike outside slope (SW side viewed SE)-note berm

Photo 1.6
Pond 1 dike outside slope (SW side viewed SE)-note berm

Photo 1.7
Pond 1 dike outside slope (SW side viewed SE)

Photo 1.8
Pond 1 dike inside slope (SW side viewed NW)

Photo 1.9
Pond 1 shallow water inside pond (SW to NE view)

Photo 1.10
Pond 1 dike outside slope (SW side viewed NE)-note berm

Photo 1.11
Pond 1 dike outside slope (SE side viewed NE)

Photo 1.12
Pond 1 dike inside slope (SW side viewed NW)

Photo 1.13
Pond 1 toe road over outfall structure (SE side viewed S)

Photo 1.14
Pond 1 dike inside slope and pond (SE side viewed NE)

Photo 1.15
Pond 1 dike inside slope (SE side viewed SW)

Photo 1.16
Pond 1 cross dike inside slope and crest (NE side viewed N)

Photo 2.1
Pond 2 NW inside access road to NE cross dike (viewed SW)

Photo 2.2
Pond 2 channel through ash from discharge lines

Photo 2.3
Pond 2 dike crest (NW side viewed NE)

Photo 2.4
Pond 2 ash sluice and drainage discharge pipes to pond

Photo 2.5
Pond 2/ Pond 1 dike crest (NW side viewed SW)

Photo 2.6
Pond 2 dike crest (SE side viewed NE)

Photo 2.7
Pond 2 dike outside slope and outlet channel (SE side viewed NE from fill ramp to landfill)

Photo 2.8
Pond 2 dike outside slope and outlet channel (SE side viewed SW from fill ramp to landfill)

Photo 2.9
Pond 2 dike outside toe area (SE side viewed NE)

Photo 2.10
Pond 3A dike outside slope (SW segment viewed SE)

Photo 2.11
Pond 2 dike outside slope (SE side viewed SW)

Photo 2.12
Pond 3A dike outside slope (SW segment viewed SE)
-note erosion repair area

Photo 2.13
Pond 2 northeast area (viewed SE)

Photo 2.14
Pond 2 cross dike inside slope (NE side viewed NE)-culverts

Photo 2.15
Pond 2 ash sluice discharge pipe

Photo 2.16
Pond 2 Fly Ash deposits form rock layers at discharge

Photo 3.1
Pond 3B South cross dike inside slope (SW side viewed NW)

Photo 3.2
Pond 3B South dike crest and inside slope (S side viewed NE)

Photo 3.3
Pond 3B South dike outside slope (S side viewed NE)
-note erosion repair

Photo 3.4
Pond 3B South dike crest and outside slope (S side viewed SW)

Photo 3.5
Pond 3B South dike inside slope (S side viewed NE) –low crest

Photo 3.6
Pond 3B South dike crest and inside slope (S side viewed SW)

Photo 3.7
Pond 3B South dike inside slope (NE side viewed N)

Photo 3.8
Pond 3B North dike outside slope (NE side viewed SE)
-note erosion holes

Photo 3.9
Pond 3B South dike outside slope (NE side viewed NW)

Photo 3.10
Pond 3B North dike crest and inside slope (NE side viewed NW)

Photo 3.11
Pond 3B North crest and cross dike inside slope
(SE side viewed SW)

Photo 3.12
Pond 3B North cross dike inside slope (SE side viewed S)

Photo 3.13
Pond 3B North dike inside slope (NE side viewed SE)

Photo 3.14
Pond 3B North dike outside slope (NE side viewed SE)

Photo 3.15
Pond 3B North dike outside slope (NE side viewed NW)

Photo 3.16
Pond 3B North dike outside slope (NW side viewed SW)

Photo 3.17
Pond 3B North dike crest and outside slope (NW side viewed SW)

Photo 3.18
Pond 3B North pond area and discharge pipe (viewed SE)

Photo 3.19
Pond 3A dike crest and outside slope (NW side viewed SE)
-note linear ash mound on inside edge of crest

Photo 3.20
Pond 3A Interior pond (viewed SE)

Photo 3.21
Pond 3A dike crest (NW side viewed SW)

Photo 3.22
Pond 3A dike crest (NW side viewed SW)

Photo 3.23
Pond 3A outside toe area (NW side viewed NE)

Photo 3.24
Pond 3A pond area (viewed NE)
-note solidified fly ash

Photo 3.25
Pond 3A dike inside slope (S side viewed E)

Photo 3.26
Pond 3A dike crest (S side viewed E)

Photo 3.27
Pond 3A dike outside swale (S side viewed E)

Photo 3.28
Pond 3A dike inside slope (S side viewed SE)

Photo 3.29
Pond 2 cross dike crest (NE side viewed NW)

Photo 3.30
Pond 3A pond area viewed E toward NE cross dike

Photo 3.31
C-Stone deposit within Pond 3A

Photo 3.32
Pond 3A ash sluice discharge pipe infrequently used

Photo 4.1
Pond 3B South Stop-log Structure

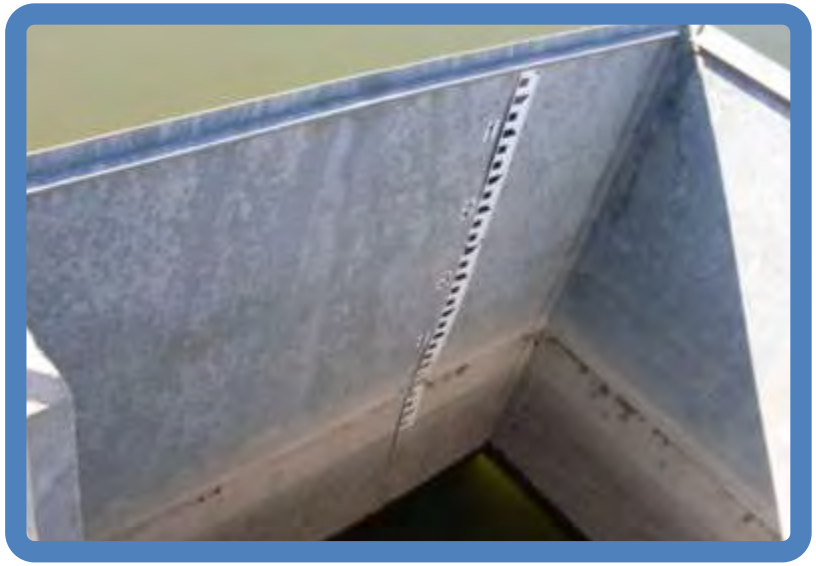

Photo 4.2
Pond 3B South Skimmer Box with staff gauge

Photo 4.3
Pond 3B South Stop-log Structure adjustable weir

Photo 4.4
Pond 3B South Wet Well Structure CO_2 applied

Photo 4.5
Outlet Pipe connects underground to 48” RCP, next to landfill

Photo 4.6
Channel from oxbow lake to Inlet End of 48” RCP Culvert

Photo 4.7
Inlet End of 48” RCP Culvert
-cage to stop beaver activity

Photo 4.8
Inlet End of 48” RCP Culvert
-screen to block animals and debris

Photo 4.9
Outlet End of 48” RCP Culvert adjacent to landfill

Photo 4.10
Close up of Outlet End of 48” RCP Culvert

Photo 4.11
Outlet End of 48” Aluminum CMP Culvert in Discharge Channel

Photo 4.12
Final Outfall Structure discharges to Missouri River

Photo 4.13
Final Outfall Structure Rectangular Weir 3'x3' opening

Photo 4.14
Final Outfall Structure 48" RCP to Missouri River

APPENDIX B

SURFACE IMPOUNDMENTS FIELD OBSERVATION CHECKLIST

Site Name:	**Neal North Energy Center**	**Date:**	**September 16, 2010**
Unit Name:	**Contiguous Ponds Units 1,2,3**	**Operator's Name:**	**MidAmerican Energy Company**
Unit I.D.:		**Hazard Potential Classification:**	**High** ☐ **Significant** ☐ **Low** ☒
	Inspector's Name:	Frederic C. Tucker and Mark Hoskins	

Check the appropriate box below. Provide comments when appropriate. If not applicable or not available, record "N/A". Any unusual conditions or construction practices that should be noted in the comments section. For large diked embankments, separate checklists may be used for different embankment areas. If separate forms are used, identify approximate area that the form applies to in comments.

	Yes	No		Yes	No
1. Frequency of Company's Dam Inspections?	Quarterly[1]		18. Sloughing or bulging on slopes?		X
2. Pool elevation (ft, provided)?	1076.5[2]		19. Major erosion or slope deterioration?		X[7]
3. Decant inlet elevation (operator records)?	TBP[3]		20. **Decant Pipes**:		
4. Open channel spillway elevation (operator records)?	X[4]		Is water entering inlet, but not exiting outlet?		X
5. Lowest dam crest elevation (operator records)?	1082.9[5]		Is water exiting outlet, but not entering inlet?		X
6. If instrumentation is present, are readings recorded (operator records)?		n/a	Is water exiting outlet flowing clear?	X	
7. Is the embankment currently under construction?		X	21. **Seepage** (specify location, if seepage carries fines, and approximate seepage rate below):		
8. Foundation preparation (remove vegetation, stumps, topsoil in area where embankment fill will be placed)?		n/a	From underdrain?		n/a
9. Trees growing on embankment? (If so, indicate largest diameter below)		X[6]	At isolated points on embankment slopes?		X
10. Cracks or scarps on crest?		X	At natural hillside in the embankment area?		X
11. Is there significant settlement along the crest?		X	Over widespread areas?		X
12. Are decant trashracks clear and in place?		n/a	From downstream foundation area?		X
13. Depressions or sinkholes in tailings surface or whirlpool in the pool area?		X	"Boils" beneath stream or ponded water?		X
14. Clogged spillways, groin or diversion ditches?		X	Around the outside of the decant pipe?		n/a
15. Are spillway or ditch linings deteriorated?		X	22. Surface movements in valley bottom or on hillside?		X
16. Are outlets of decant or underdrains blocked?		X	23. Water against downstream toe?		X
17. Cracks or scarps on slopes?		X	24. Were Photos taken during the dam inspection?	X	

Major adverse changes in these items could cause instability and should be reported for further evaluation. Adverse conditions noted in these items should normally be described (extent, location, volume, etc.) in the space below and on the back of this sheet.

Issue #	Comments
	TBP – to be provided n/a – not applicable or not a feature
1	MidAmerican also conducts internal inspections and informal daily inspections over the course of the year by plant and security personnel.
2	The polishing pond (called 3B South) elevation was 1076.5 feet at the time of the site visit. The two connected adjacent ponds were at 1080.4 feet (Pond 3B North, active side) and 1080.9 feet (Pond 3A). The ponds are interconnected by culverts and are all within a perimeter berm noted by this checklist.
3	During the visit the elevation was 1076.5 in the polishing pond. The pond elevation can be adjusted with an adjustable weir. The pond had recently been lowered approximately 3.0 feet below the 1079.5-foot summer operating level.

Issue #	Comments
4	The outflow swale discharges into a 6'x4' concrete box weir, then 48"RCP, then swale, then another 48"RCP, then discharged to the Missouri River. The upstream weir invert is 1070 feet and the Missouri River elevation is 1055.7 feet. The flow distance is about 3300 LF making the average slope approximately 0.4 percent.
5	The exterior perimeter berm elevation is constant at 1085 excepting for several section including an area along the Polishing pond (Pond 3B) adjacent to the ox-bow pond. This lower section is at elevation 1082.9 and portions at elevation 1084.0. MidAmerican is planning to raise these portions of the berm in the near future.
6	Trees were recently removed from several berm locations.
7	Portions of the perimeter berm are steep (east and south side of the perimeter berm) and will require slope re-grading and establishment of suitable vegetative cover.

Coal Combustion Waste (CCW)
Impoundment Inspection

Impoundment NPDES Permit	IA0004103	**INSPECTOR**	Frederic C. Tucker and Mark Hoskins

Date Permit Expired March 31, 2003
Impoundment Name Ponds - L#1,2,3-North

Impoundment Company MidAmerican Energy Company
EPA Region 7

State Agency (Field Office) Address Iowa Department of Natural Resources, 401 SW 7th, Suite I Des Moines, IA 50309
Name of Impoundment L#1,2,3-North

(Report each impoundment on a separate form under the same Impoundment NPDES Permit number)

New ☐ **Update** ☒

	Yes	No
Is impoundment currently under construction?	☐	☒
Is water or ccw currently being pumped into the impoundment?	☒	

IMPOUNDMENT FUNCTION: To impound fly ash, bottom ash, mill rejects and boiler slag. Other permitted materials include ash transport water, boiler blowdown, floor drain wastewater, stormwater runoff (immediate adjacent) ash hopper water, bearing cooler water, seal water and air conditioning cooling water

Nearest Downstream Town Name: Salix, Iowa

Distance from the impoundment: 4 miles

Location:

Latitude	42	Degrees	19	Minutes	21.7164	Seconds	N
Longitude	-96	Degrees	22	Minutes	1.84	Seconds	W
State	Iowa		County	Woodbury County			

	Yes	No
Does a state agency regulate this impoundment?	☒	☐

If So Which State Agency? Iowa Department of Natural Resources

HAZARD POTENTIAL *(In the event the impoundment should fail, the following would occur):*

☐ **LESS THAN LOW HAZARD POTENTIAL:** Failure or misoperation of the dam results in no probable loss of human life or economic or environmental losses.

☒ **LOW HAZARD POTENTIAL:** Dams assigned the low hazard potential classification are those where failure or misoperation results in no probable loss of human life and low economic and/or environmental losses. Losses are principally limited to the owner's property.

☐ **SIGNIFICANT HAZARD POTENTIAL:** Dams assigned the significant hazard potential classification are those dams where failure or misoperation results in no probable loss of human life but can cause economic loss, environmental damage, disruption of lifeline facilities, or can impact other concerns. Significant hazard potential classification dams are often located in predominantly rural or agricultural areas but could be located in areas with population and significant infrastructure.

☐ **HIGH HAZARD POTENTIAL:** Dams assigned the high hazard potential classification are those where failure or misoperation will probably cause loss of human life.

DESCRIBE REASONING FOR HAZARD RATING CHOSEN:

Complete failure of the perimeter dike embankment at practically any location on the perimeter, could potentially release some bottom ash which may reach the Missouri River, which could cause minor environmental damage. It was observed that fly ash in the ponds has set-up into a shale-like material, which probably would not be as mobile as bottom ash under the action of water flowing through a breach.

CONFIGURATION:

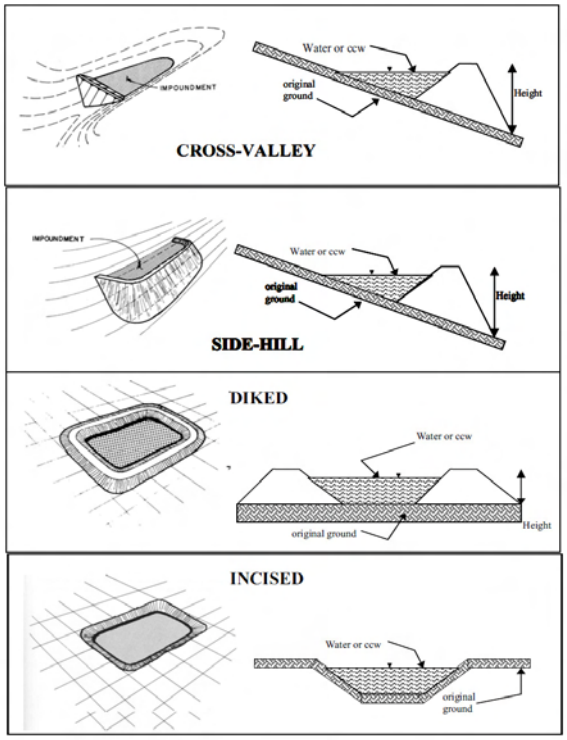

☐ Cross-Valley ☐ Side-Hill ☒ Diked

☐ Incised (form completion optional) ☐ Combination Incised/Diked

Total Pond Area (ac) 115.1 (Ponds 1, 2A, 3B North and 3B South)

Pond 1 (dry)

Embankment Height (ft)	1085.0	**Embankment Material**	Silty Clay (from borings)
Pool Area (ac)	12.1	**Liner**	None
Current Freeboard (ft)	n/a (dry)	**Liner Permeability**	n/a

Pond 2A and 3A

Embankment Height (ft)	1085.0	**Embankment Material**	Silty Clay (from borings)
Pool Area (ac)	63.6	**Liner**	None
Current Freeboard (ft)	4.1	**Liner Permeability**	n/a

	Pond 3B North	**Pond 3B South**		
Embankment Height (ft)	1085.0	1082.9	**Embank. Material**	Silty Clay (from borings)
Pool Area (ac)	24.8	14.6	**Liner**	None
Current Freeboard (ft)	4.6	6.4	**Liner Permeability**	n/a

TYPE OF OUTLET (Mark all that apply)

☐ **Open Channel Spillway**

- ☐ Trapezoidal
- ☐ Triangular
- ☒ Rectangular
- ☐ Irregular

depth (ft) 4.0

Ave. bottom width (ft) 6.0

top width (ft)

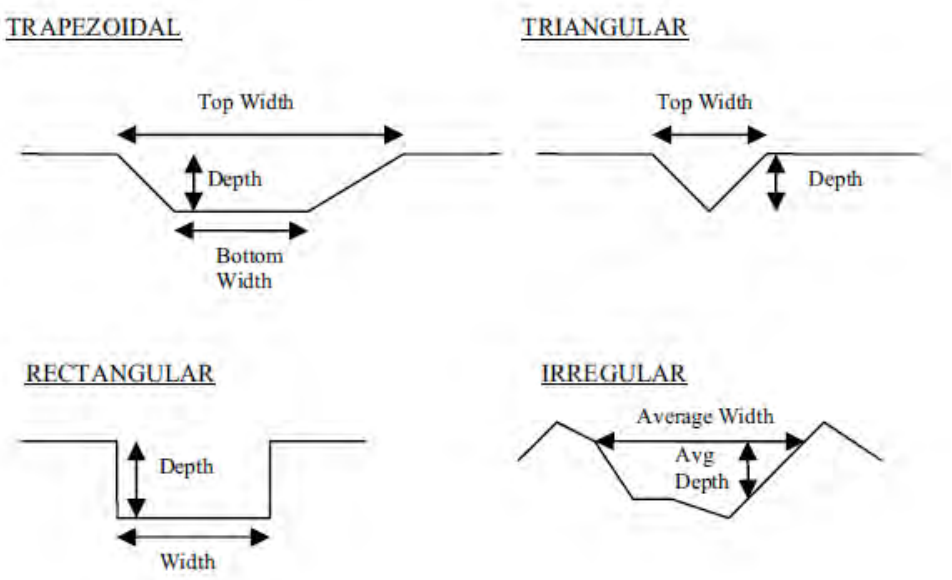

☒ **Outlet**

48" inside diameter

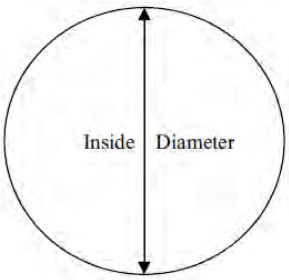

Material

- ☐ **corrugated metal**
- ☐ **welded steel**
- ☒ **Concrete**
- ☐ **plastic (hdpe, pvc, etc.)**
- ☐ **other (specify):**

	Yes	No
Is water flowing through the outlet?	☒	☐

☐ **No Outlet**

☐ **Other Type of Outlet** (specify):

The Impoundment was Designed By: Ebasco Services Inc., New York

	Yes	No
Has there ever been a failure at this site?	☐	☒

If So When?

If So Please Describe :

	Yes	No
Has there ever been significant seepages at this site?	☐	☒
If So When?		

If So Please Describe :

	Yes	No
Has there ever been any measures undertaken to monitor/lower Phreatic water table levels based on past seepages or breaches at this site?	☐	☒

If so, which method (e.g., piezometers, gw pumping,...)?

If So Please Describe :

ADDITIONAL INSPECTION QUESTIONS

Concerning the embankment foundation, was the embankment construction built over wet ash, slag, or other unsuitable materials? If there is no information just note that.

There is no available information that implies that the dike embankments were built on unsuitable material. Many of the June 2009 HWS geotechnical report borings show natural-ground sandy silt below the perimeter berm.

Did the dam assessor meet with, or have documentation from, the design Engineer-of-Record concerning the foundation preparation?

The design Engineer-of-Record was not present during the site visit.

From the site visit or from photographic documentation, was there evidence of prior releases, failures, or patchwork on the dikes?

No evidence of prior releases or significant past repairs were noted in the site visit.

APPENDIX C

REFERENCE DOCUMENTS

Doc 1.1:	George Neal North Energy Center Google Map Aerial (5-Mile Radius)
Doc 1.2:	George Neal North Energy Center Aerial Map
Doc 1.3:	Unit Train & Ash Dike Plan & Sections (Original)
Doc 1.4:	Unit Train & Ash Dike Sections & Details (Original)
Doc 1.5:	HWS Geotechnical Report
Doc 1.6:	NPDES Permit

APPENDIX C

DOC 1.1 NEAL NORTH ENERGY CENTER GOOGLE MAP AERIAL (5-MILE RADIUS)

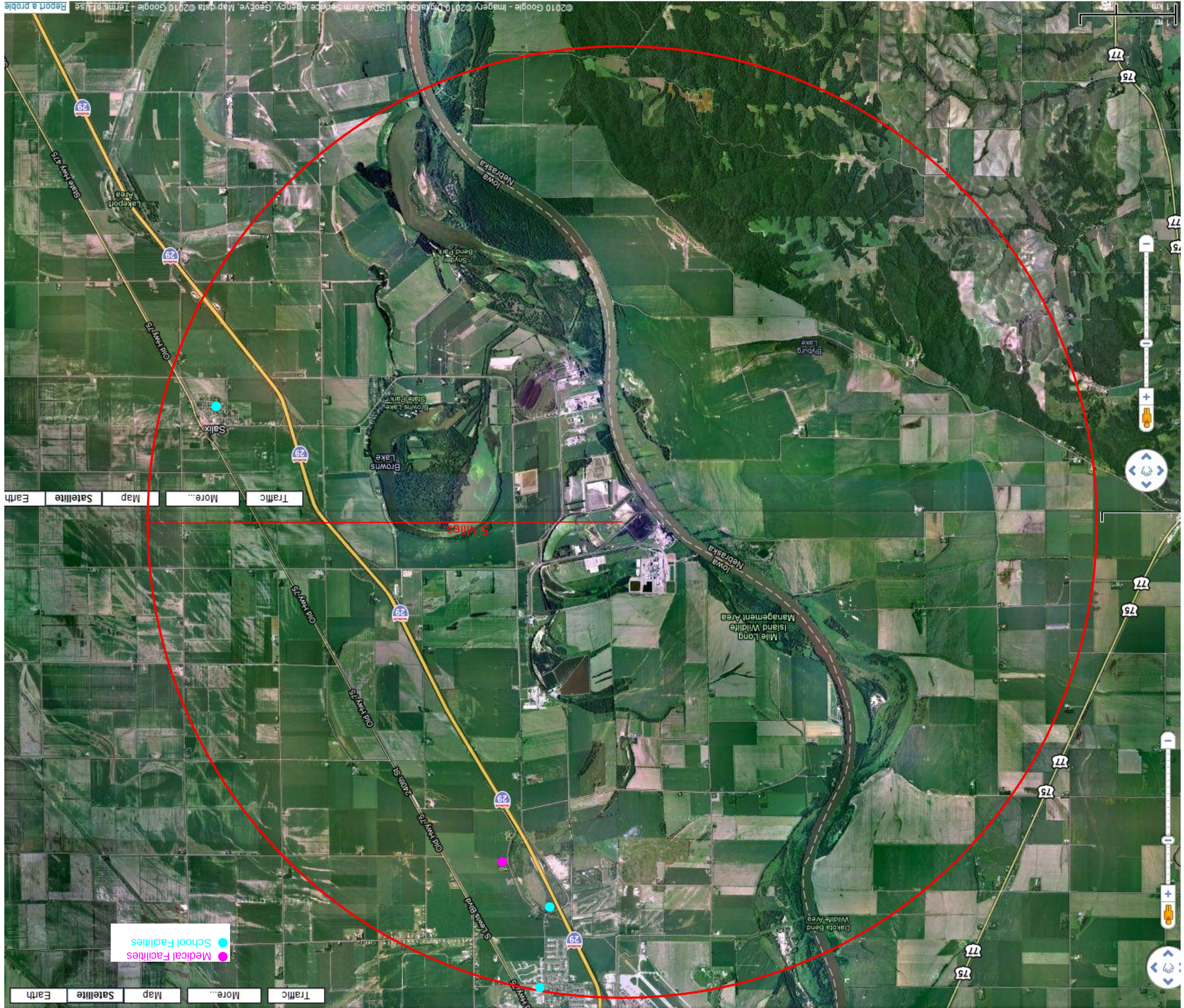
Traffic
More...
Map
Satellite
Earth
Medical Facilities
School Facilities
3 Miles
Browns Lake
Salix
Browns Lake State Park
Old Hwy 75
State Hwy 475
Lakeport Area
Snyder Bend Park
Iowa
Nebraska
Bigburg Lake
Dakota Bend Wildlife Area
Mile Long Island Wildlife Management Area
S Lewis Blvd
24th St
29
75
77
©2010 Google - Imagery ©2010 DigitalGlobe, USDA Farm Service Agency, GeoEye, Map data ©2010 Google - Terms of Use
Report a problem

APPENDIX C

DOC 1.2 NEAL NORTH ENERGY CENTER AERIAL MAP

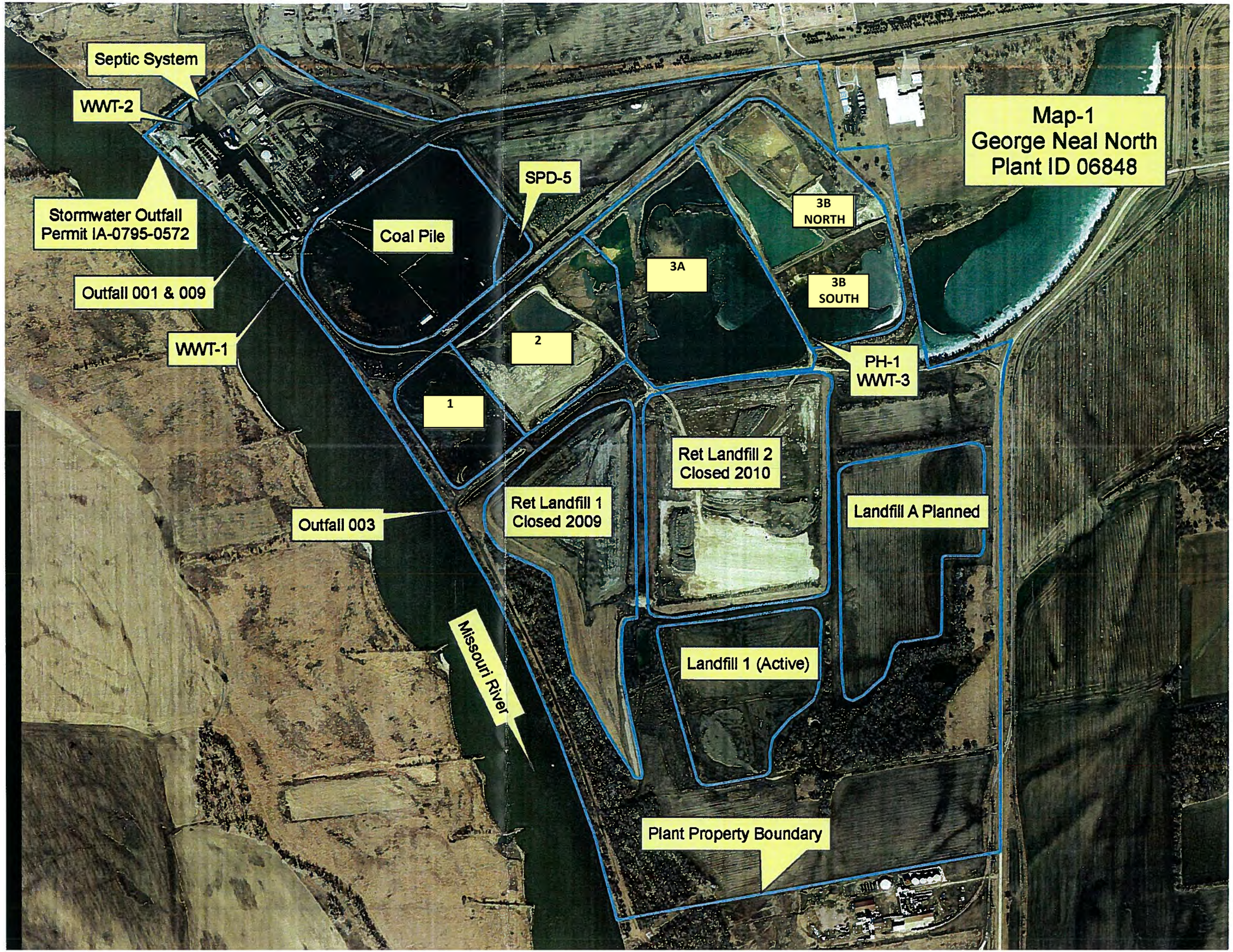
Map-1
George Neal North
Plant ID 06848
Septic System
WWT-2
Stormwater Outfall
Permit IA-0795-0572
Outfall 001 & 009
WWT-1
Coal Pile
SPD-5
3B
NORTH
3A
3B
SOUTH
2
1
PH-1
WWT-3
Ret Landfill 2
Closed 2010
Ret Landfill 1
Closed 2009
Landfill A Planned
Outfall 003
Missouri River
Landfill 1 (Active)
Plant Property Boundary

APPENDIX C

DOC 1.3 UNIT TRAIN & ASH DIKE PLAN & SECTIONS (ORIGINAL)

G-201238

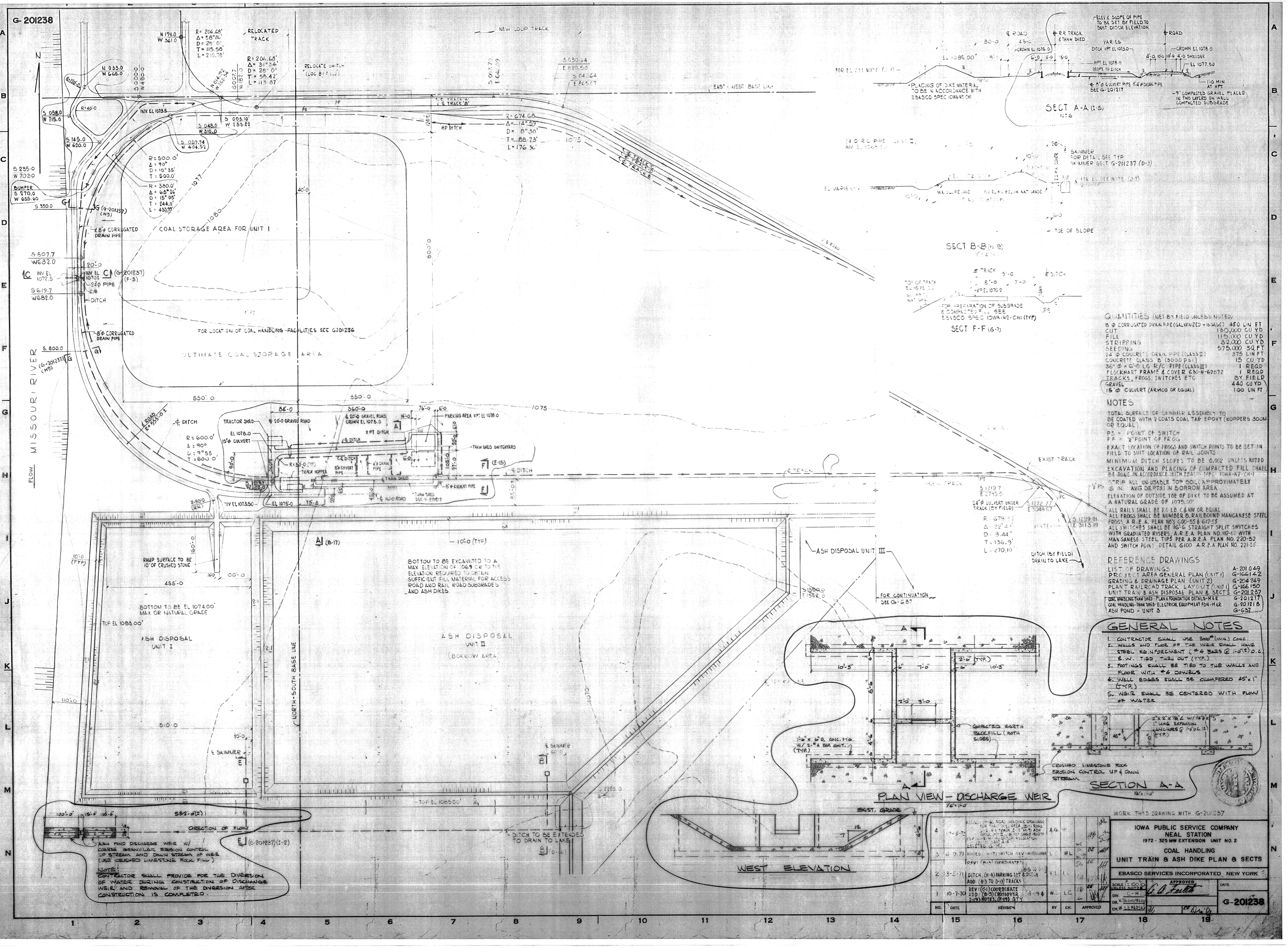

QUANTITIES (NET BY FIELD UNLESS NOTED)

8 ϕ CORRUGATED DRAIN PIPE (GALVANIZED #16 GAGE)	450 LIN FT
CUT	130,000 CU YD
FILL	115,000 CU YD
STRIPPING	82,000 CU YD
SEEDING	575,000 SQ FT
24 ϕ CONCRETE DRAIN PIPE (CLASS II)	875 LIN FT
CONCRETE CLASS B (3000 PSI)	15 CU YD
36" ϕ × 6'-0 LG R/C PIPE (CLASS III)	1 REQD
FLOCKHART FRAME & COVER 630-H-62872	1 REQD
TRACKS, FROGS, SWITCHES ETC	BY FIELD
GRAVEL	440 CU YD
15 ϕ CULVERT (ARMCO OR EQUAL)	100 LIN FT

NOTES

TOTAL SURFACE OF SKIMMER ASSEMBLY TO BE COATED WITH 2 COATS COAL TAR EPOXY (COPPERS 300M OR EQUAL).

PS = POINT OF SWITCH
FF = 2" POINT OF FROG

EXACT LOCATION OF FROGS AND SWITCH POINTS TO BE SET IN FIELD TO SUIT LOCATION OF RAIL JOINTS

MINIMUM DITCH SLOPES TO BE 0.002 UNLESS NOTED

EXCAVATION AND PLACING OF COMPACTED FILL SHALL BE DONE IN ACCORDANCE WITH EBASCO SPEC IOWA-N2-CH-1

STRIP ALL UNUSABLE TOP SOIL (APPROXIMATELY 6 IN. AVG DEPTH) IN BORROW AREA

ELEVATION OF OUTSIDE TOE OF DIKE TO BE ASSUMED AT A NATURAL GRADE OF 1075.00'

ALL RAILS SHALL BE 115 LB C & NW OR EQUAL
ALL FROGS SHALL BE NUMBER 8, RAILBOUND MANGANESE STEEL FROGS, A.R.E.A. PLAN NO'S 600-55 & 612-55
ALL SWITCHES SHALL BE 16'-6 STRAIGHT SPLIT SWITCHES WITH GRADUATED RISERS, A.R.E.A. PLAN NO. 112-62 WITH MANGANESE STEEL TIPS PER A.R.E.A. PLAN NO. 220-52 AND SWITCH POINT DETAIL G100 A.R.E.A. PLAN NO. 221-55

REFERENCE DRAWINGS

LIST OF DRAWINGS	
PROJECT AREA GENERAL PLAN (UNIT I)	A-201049
GRADING & DRAINAGE PLAN (UNIT 2)	G-166142
PLANT RAILROAD TRACK LAYOUT (UNIT I)	G-204249
UNIT TRAIN & ASH DISPOSAL PLAN & SECTS	G-166150
COAL HANDLING-TRAW SHED-PLAN & FOUNDATION DETAILS-M&R	G-201237
COAL HANDLING-TRAW SHED-ELECTRICAL EQUIPMENT PLAN-M&R	G-201217
ASH POND - UNIT 3	G-201218
	G-687

GENERAL NOTES

1. CONTRACTOR SHALL USE 3000# (MIN.) CONC.
2. WALLS AND FLOOR OF THE WEIR SHALL HAVE STEEL REINFORCEMENT (#4 BARS @ 1'-0" (±) O.C. E.W. TIED, THRU OUT (TYP.)
3. FOOTINGS SHALL BE TIED TO THE WALLS AND FLOOR WITH #4 DOWELS
4. WALL EDGES SHALL BE CHAMFERED 45° x 1" (TYP.)
5. WEIR SHALL BE CENTERED WITH FLOW OF WATER

NO.	DATE	REVISION	BY	CH.	APPROVED
4	1-5-72	ADDED: (H-3) COAL HANDLING DRAINAGE FOR TRAW SHED AREA, (B-1) ROAD & RR TRACK (I-5) (H-7) ASH DISPOSAL UNIT 2 & 3 (B-17) ASH DISPOSAL UNIT 2 & 3 (B-19) ASH DISPOSAL UNIT 2 & 3 REVISED: (B-1) ROAD ALIGNMENT	A.G.	HF	
3	6-9-71	ADDED: (H-17) SWITCH REV: (H-15) CURVE DEV: (F-8-7) COORDINATES	L.C.	W.L.	
2	3-5-71	DITCH, (H-4) PARKING LOT & DITCH ADD: (B-3) TO (D-13) TRACKS DEV: (C-1) COORDINATE ADD: (B-5) CROSSOVER I-19) NOTES, (F-19) QTY	W.L.	L.C.	
1	10-7-70		W.L.	L.C.	

IOWA PUBLIC SERVICE COMPANY
NEAL STATION
1972 - 325 MW EXTENSION UNIT NO. 2

COAL HANDLING
UNIT TRAIN & ASH DIKE PLAN & SECTS

EBASCO SERVICES INCORPORATED NEW YORK

SCALE 1" = 100'-0 UNLESS NOTED
DIV. C-H
DR. M. Skowronski
CH. W. L. B. PROSKE
APPROVED G. A. Fuller
DATE
G-201238

APPENDIX C

DOC 1.4 UNIT TRAIN & ASH DIKE SECTIONS & DETAILS (ORIGINAL)

G-201237

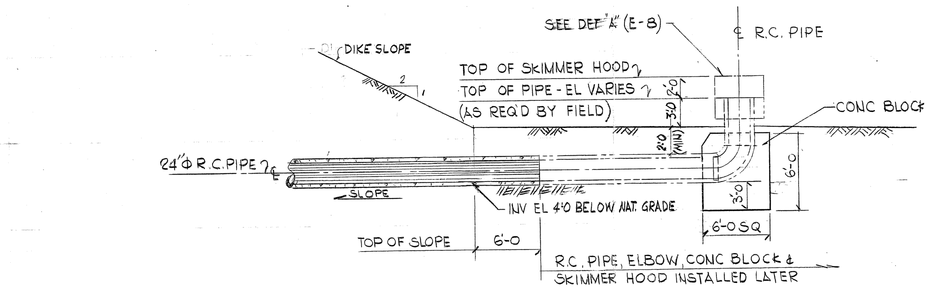

TYPICAL SKIMMER SECT
1/8 = 1'-0

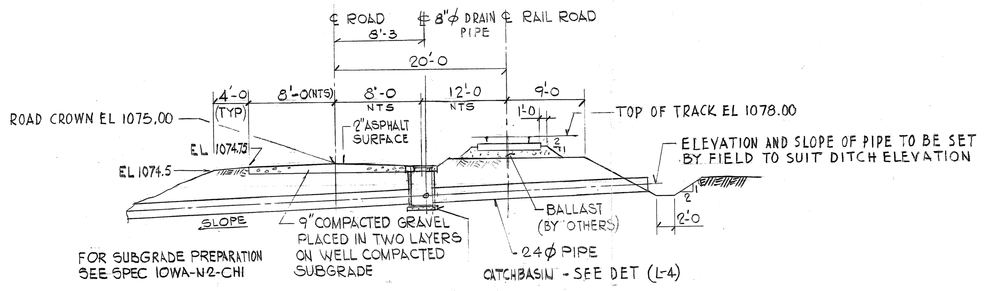

SECT C-C (G-201238) (E-1)
1" = 10'-0

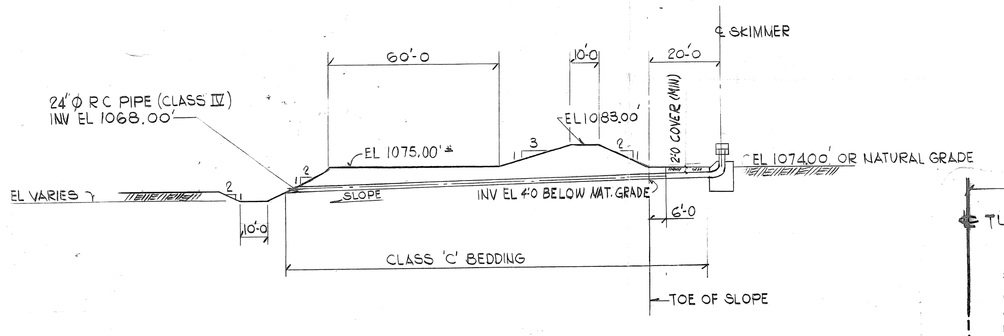

SECT E-E (G-201238) (N-4)
1" = 20'-0

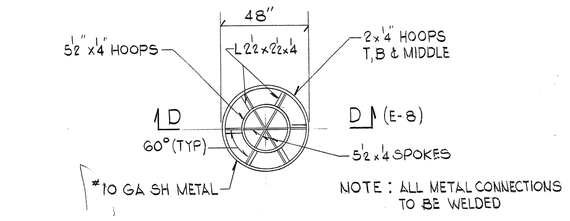

PLAN

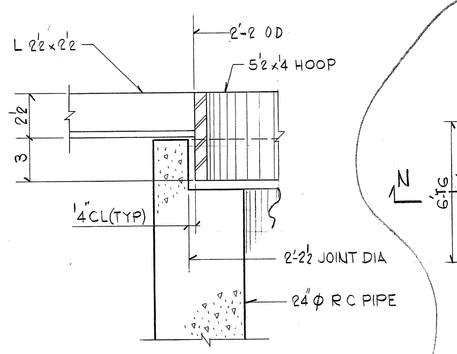

DET "B" (D-8)
NTS

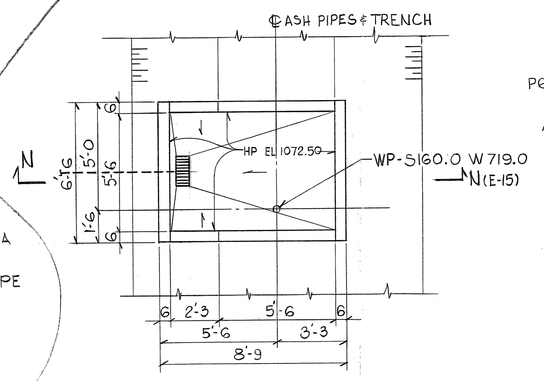

PLAN - MAS

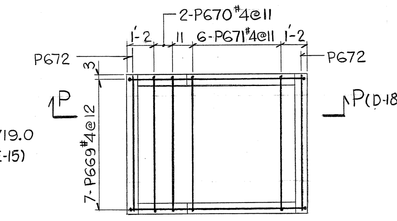

PLAN - REINF

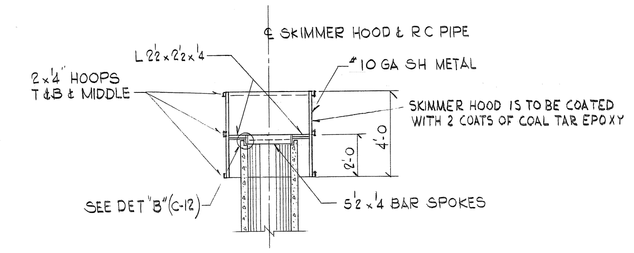

SECT D-D (B-8)

DET "K" (B-2)
1/4 = 1'-0

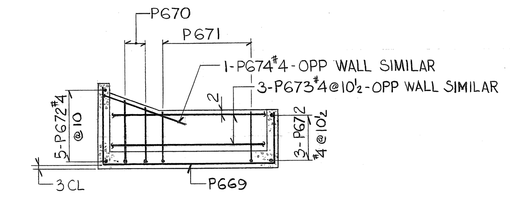

SECT P-P (B-18)

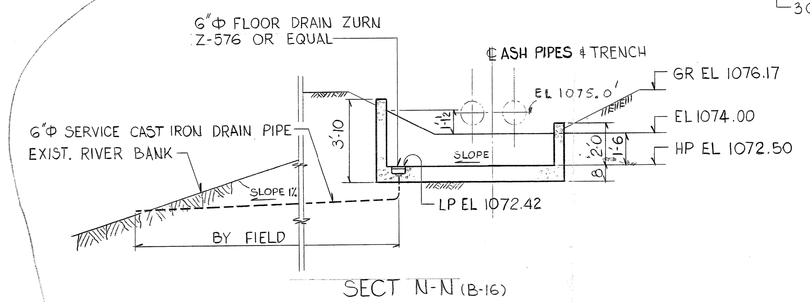

SECT N-N (B-16)

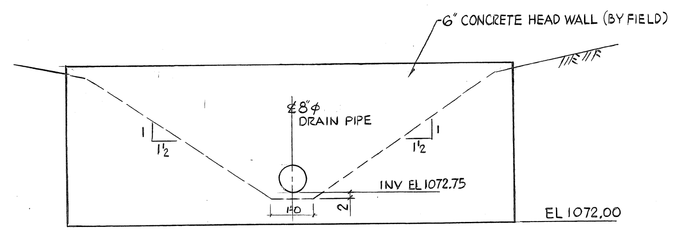

SECT G - G (G-201238) (D1)(F1)
1/2 = 1'-0

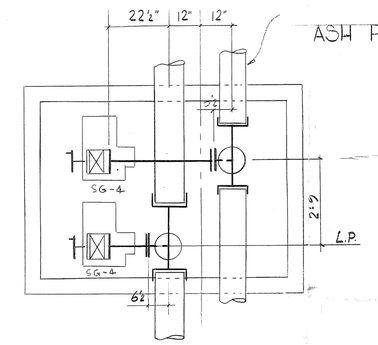

ASH PIPES DRAIN PIT
1/4 = 1'-0

QUANTITIES (NET BY FIELD UNLESS NOTED)

CONCRETE CLASS 'B' (3000 PSI)	6.5	CU YD
24"Φ VC PIPE	24	LIN FT
4"Φ PERFORATED VC PIPE	40	LIN FT
6"Φ VC PIPE	BY	FIELD
RUNGS	7	REQD
2'-5 x 2'-4 x 2" PRECAST CONCRETE BAFFLE	1	REQD
4'-2 x 1'-2 x 4" PRECAST CONCRETE COVER	2	REQD
GRAVEL	0.5	CU YD
6"Φ FLOOR DRAIN ZURN Z-576 OR EQUAL	1	REQD
6"Φ SERVICE CAST IRON PIPE & FITTINGS	BY	FIELD

NOTES

FOR NOTES, REFERENCE DRAWINGS & OTHER QUANTITIES SEE G-201238

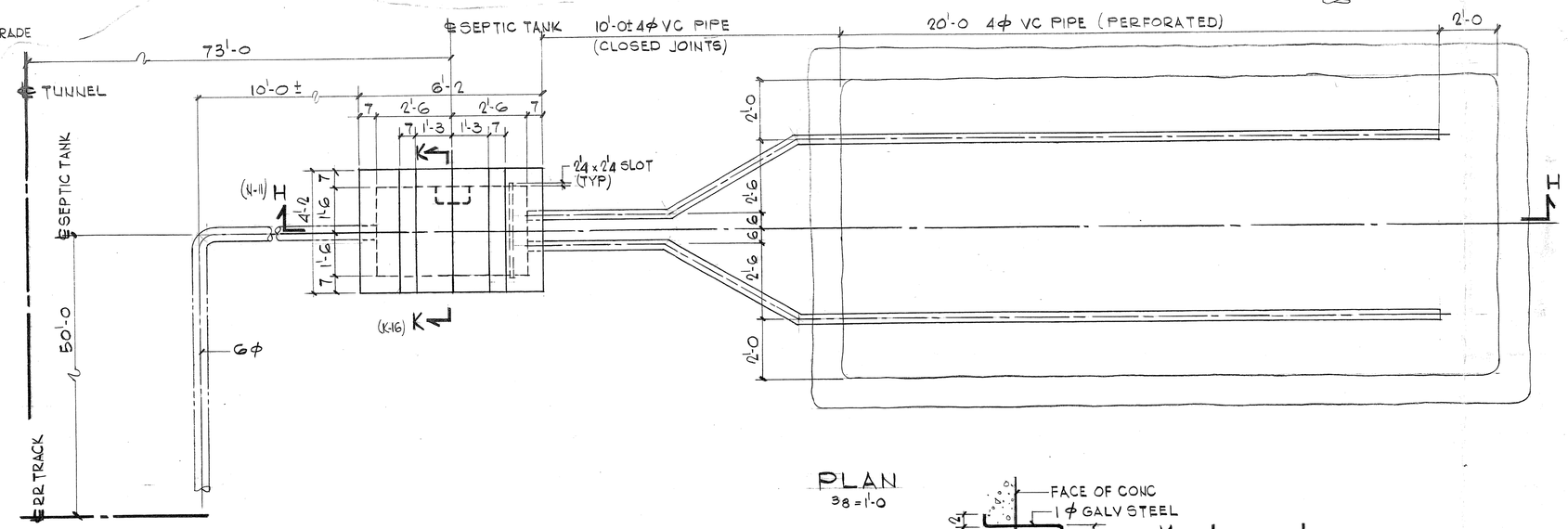

PLAN
3/8 = 1'-0

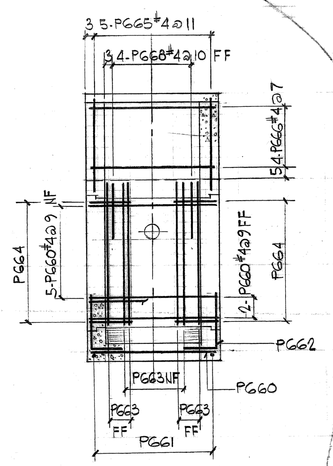

SECT K-K (J-8)
OPP WALL SIMILAR

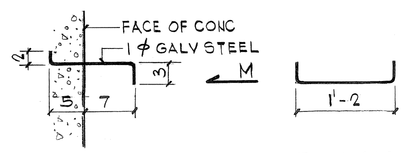

DET L (K-9)
1 = 1'-0

ELEV M

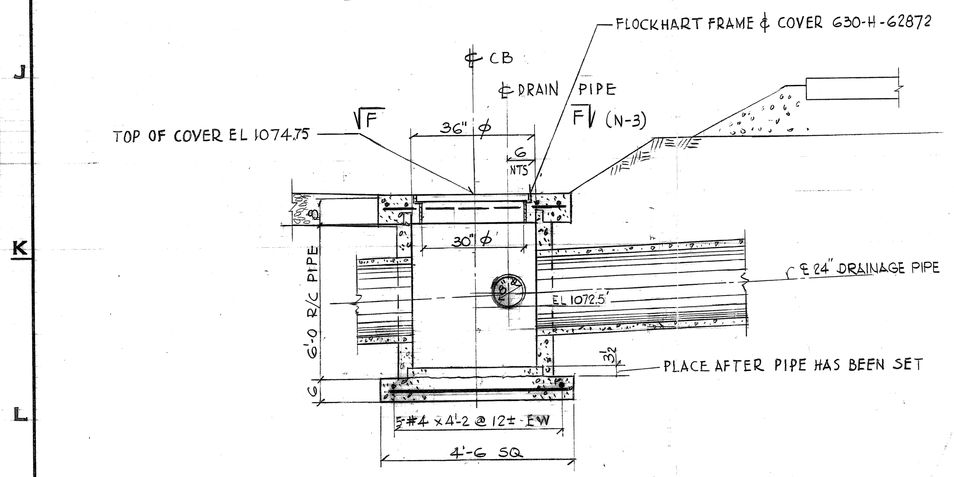

CATCHBASIN DETAIL (SEE G-201238)(E-1)
1/2 = 1'-0

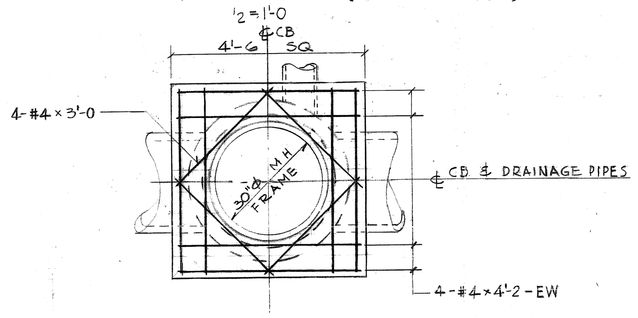

PLAN F-F (J-4)
1/2 = 1'-0

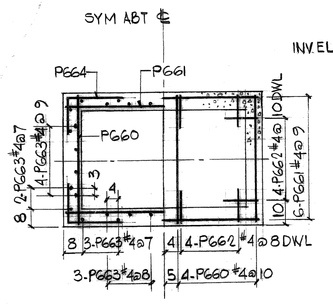

SECT J-J (M-8)

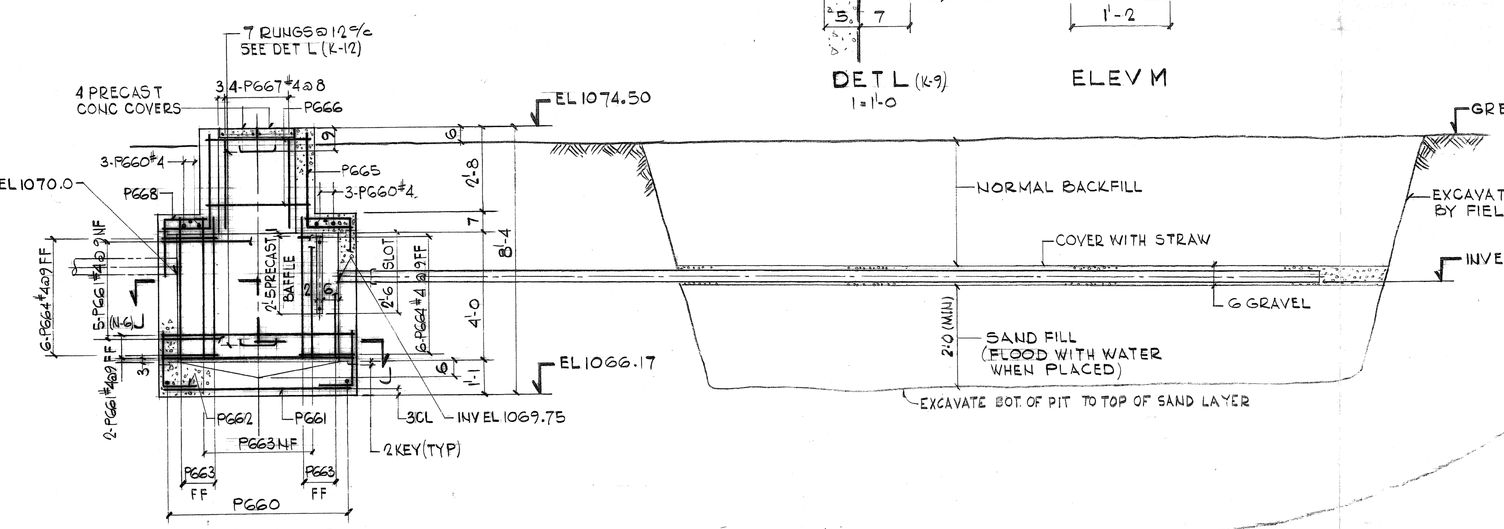

SECT H-H (L-7)

WORK THIS DRAWING WITH G-201238

NO.	DATE	REVISION	BY	CH.	APPROVED
1	4-16-71	ADDED: (L-8) SEPTIC TANK, (C-14) DRAIN PIT, (E-18) QTY	LC RM	WL	

IOWA PUBLIC SERVICE COMPANY
NEAL STATION
1972 - 325 MW EXTENSION UNIT NO. 2

COAL HANDLING
UNIT TRAIN & ASH DIKE SECTS & DETS

EBASCO SERVICES INCORPORATED NEW YORK

SCALE AS NOTED | APPROVED | DATE 9-10-70

DIV. CH | DIR. | CH. W. LEPARSKI

G-201237

APPENDIX C

DOC 1.5 HWS GEOTECHNICAL REPORT

HWS
Solutions Through Service

825 "J" Street
P.O. Box 80358
Lincoln, NE 68501
P: 402-479-2200 F: 402-479-2276

LETTER OF TRANSMITTAL

TO: MidAmerican Energy Company
Neal Energy Center
401 Douglas, P.O. Box 778
Sioux City, Iowa 51102

DATE: 9-10-09
JOB NO: 52-69-5092
ATTN: Mr. DeWayne Keegel

REGARDING: Final Geotechnical Reports with Corrections for Fly Ash Disposal Pond Containment Assessment

THE FOLLOWING ITEMS ARE: ☒ Attached ☐ Under separate cover via _____

☐ Shop drawings ☐ Prints ☐ Plans ☐ Samples ☐ Specifications
☐ Copy of letter ☐ Change order ☐ As noted ☐ _____

COPIES	DATE	NO.	DESCRIPTION
2	9-10-09		Unbound and Bound Copy of Final Geotechnical Report with Corrections

THESE ARE TRANSMITTED as checked below:

☐ For approval ☐ No exceptions taken ☐ Resubmit _____ copies for review
☐ For your use ☐ Exceptions taken as noted ☐ Submit _____ copies for distribution
☒ As requested ☐ Revise and resubmit ☐ Return _____ revised prints
☐ For review and comment ☐ Rejected ☐ _____
☐ FOR BIDS DUE _____, 20__ ☐ PRINTS RETURNED AFTER LOAN TO US

REMARKS: Mr. Keegel. Attached are two (unbound and bound) copies of the final geotechnical report with corrections as requested by Mr. Shad Sweeney. Thanks. Brandon Desh

COPY w/ATTACH. TO: _____
COPY ONLY TO: _____ SIGNED: Brandon Desh

LTRTRANL

GEOTECHNICAL ENGINEERING REPORT

Fly Ash Disposal Pond Containment Assessment

MidAmerican Energy - Port Neal North

West of Salix, Iowa

PREPARED FOR

MidAmerican Energy Company

Neal Energy Center

401 Douglas, P.O. Box 778

Sioux City, Iowa 51102

June 15, 2009

PREPARED BY

HWS

Solutions Through Service

HWS Consulting Group
825 J Street, Box 80358
Lincoln, NE 68501-0358
402.479.2200 • Fax: 402.479.2276
www.hws.com

Solutions Through Service

June 15, 2009

Mr. DeWayne L. Keegel-Supervising Engineer
MidAmerican Energy Company
Neal Energy Center
401 Douglas, P.O. Box 778
Sioux City, IA 51102

REFERENCE: Geotechnical Investigation and Analysis
Fly Ash Disposal Pond Containment Assessment
MidAmerican Energy-Port Neal North
West of Salix, Iowa

Dear Mr. Keegel:

HWS Consulting Group Inc. (HWS) is pleased to submit the enclosed report that summarizes the findings of a soil and geotechnical engineering investigation, analysis, and assessment. It also provides recommendations related to the geotechnical assessment for the fly ash disposal containment ponds at the referenced location.

If any questions arise concerning this report or if additional information is needed, please contact HWS for assistance.

Sincerely,

HWS CONSULTING GROUP INC.

Prepared By:

LICENSED PROFESSIONAL ENGINEER
BRANDON L. DESH
19195
6-15-09
IOWA

Brandon L. Desh, P.E.

Reviewed By:

Gary E. Proskovec, P.E.

BLD/bld
Enclosures
52-89-3756 (52-69-5092)
H:\Geodata\Projects\52-69-5092\Mid American Energy Port Neal Fly Ash Pond Containment Report.doc
Orig. & 2 cc: MidAmerican Energy Company; Attn. Mr. DeWayne L. Keegel, Supervising Eng
1 cc.: MidAmerican Energy Company; Attn. Mr. Shad Sweeney, Engineer II
1 cc.: HWS Consulting Group; Attn. Mr. Frank Doland

GEOTECHNICAL ENGINEERING REPORT

Fly Ash Disposal Pond Containment Assessment
MidAmerican Energy - Port Neal North
West of Salix, Iowa

Prepared
for

MidAmerican Energy Company
North Neal Center
401 Douglas, P.O. Box 778
Sioux City, IA 51102

June 15, 2009

Prepared
by

HWS CONSULTING GROUP INC.
825 "J" Street
Lincoln, Nebraska 68508

CONTENTS

		Page
I.	INTRODUCTION	3
II.	SUBSURFACE EXPLORATION	4
III.	LABORATORY ANALYSES	6
IV.	GEOLOGY AND SITE CONDITIONS	10
V.	DISCUSSION AND RECOMMENDATIONS	13
VI.	CONCLUSIONS	30

APPENDIX A. BORING LOCATION PLAN

APPENDIX B. VICINITY MAP AND DIKE CROSS SECTIONS

APPENDIX C. BORING LOGS & DUTCH FRICTION-CONE PENETRATION DIAGRAMS

missing

missing APPENDIX D. CRITERIA USED FOR VISUAL CLASSIFICATION

Table D-1. Soil Classification Chart

Table D-2. Criteria for Describing Moisture Condition of Clay Soil

Table D-3. Criteria for Describing Moisture Condition of Granular Soil

Table D-4. Criteria for Describing Consistency of Clay Soil

Table D-5. Criteria for Describing Density of Coarse- Grained Soil

Table D-6. Criteria for Describing Strength of Rock

Table D-7. Rock Quality Designation (RQD)

missing APPENDIX E. UNCONFINED COMPRESSION TEST REPORTS

missing APPENDIX F. TRIAXIAL COMPRESSION TEST REPORTS

APPENDIX G EMBANKMENT STABILITY FAILURE ANALYSES

APPENDIX H. UNDERSEEPAGE AND LIQUEFACTION ANALYSES

missing

I. INTRODUCTION

MidAmerican Energy currently operates three fly ash disposal ponds (Units I, II, IIIa and IIIb) to the south of their Port Neal North Power Plant just off the Missouri River west of Salix, Iowa. The intent of this project is to assess the stability of the existing perimeter dikes (berms) located around the three fly ash disposal ponds. It is not the intent of this assessment to address containment or seepage losses from the fly ash disposal ponds. The geotechnical field exploration, laboratory soils testing, analysis, and assessment included: (1) a review of original design plans and project specifications that were developed between 1960 and 1975 and made available to HWS, (2) performing field survey to establish the current configuration of dikes at potential assessment locations, (3) geotechnical exploration and laboratory soils testing, (4) presenting slope stability, seepage failure, and liquefaction analyses findings, (5) consultation with MidAmerican Energy engineering personnel to assess the operating conditions such as maximum pool elevations and fly ash containment heights for all three units (6) discussion on the condition of the existing dikes with recommended berm remedial measures, and (7) recommendations for satisfactory future operation of the dike system.

Field and laboratory work consisted of: (a) making auger borings and Dutch friction-cone soundings to determine the depth, thickness, and composition of each soil formation encountered to the depths of the borings, (b) performing field tests to determine the approximate strength of the foundation and dike soils, (c) performing a geologic study to determine the origin of the deposits underlying the site, and (d) performing standard tests to determine the engineering properties of both the soil strata and fly-ash that would affect the stability of the dikes.

II. SUBSURFACE EXPLORATION

A program of Dutch friction-cone soundings, test borings, and soil sampling was performed at the project site from April 20 through 24 and June 10 and 11, 2009. Seven (7) Dutch friction-cone soundings were made at the site. The results of the soundings were used to determine the depths for obtaining undisturbed soil samples from an exploratory boring made immediately adjacent to each sounding. Twenty-five (25) exploratory borings were taken to depths of 4.8 to 35 feet below the existing grade to establish the general subsurface conditions of the area under consideration. Originally twelve locations were proposed for exploration to determine the general subsurface, soil dike, fly-ash dike and dike material conditions. Seven (7) exploratory locations needed to be added to the field exploration program due to dikes not being located at the anticipated locations, and due to seepage noted (at the time subsurface exploration operations were being performed) from drainage of the ditch that runs along the south side of ash disposal unit (pond) #3B.

The Dutch friction-cone soundings were performed with a mechanical penetrometer in accordance with ASTM D 3441-98, Standard Method for Deep, Quasi-Static, Cone, and Friction Cone Penetration Tests of Soil. The mechanical penetrometer operates incrementally, using a set of inner rods to operate a telescoping penetrometer tip and to transmit the components of penetration resistance (cone bearing and friction sleeve resistance) to the surface for measurement. The plot of the test data identifies the relative positions and thicknesses of hard and soft layers. The borings were made in accordance with ASTM D 1452, Standard Practice for Soil Investigation and Sampling by Auger Borings. A machine-driven, hollow-stem, continuous-flight auger having an outside diameter of 6 inches was used to advance the holes for split-barrel and thin-walled tube sampling. The bore holes were stable and casing was not required. Locations that were not accessible with the truck mounted drill rig due to terrain or existent overhead power lines required the use of manually operated field exploration equipment to log and sample subsurface soils.

Penetration tests were performed with a CME Automatic Free-Fall SPT Hammer in accordance with ASTM D 1586, Standard Method for Penetration Test and Split-Barrel Sampling of Soils. Representative samples of soil were obtained for identification purposes. The resistance of the soil to penetration of the sampler, measured in blows per foot (N), is an indication of the relative density of cohesionless soil and of the consistency of cohesive soil.

Twenty-six (26) relatively undisturbed soil samples were recovered for visual observation and laboratory testing. This sampling was performed in accordance with ASTM D 1587, Standard Method for Thin-Walled Tube Sampling of Soil, utilizing an open-tube sampler having an outside diameter of 3.0 inches.

Rock core drilling was performed at boring C-4 (section B-B located on the north side of ash pond #3A) to a depth to a depth of 17.3 feet to try and sample the solidified fly ash material at the boring location. This drilling and sampling was performed in accordance with ASTM D 2113, Standard Practice for Rock Core Drilling and Sampling.

The vicinity map and the boring location plan are presented in Appendix A. The penetration diagrams (see Appendix C) present the results of the Dutch friction-cone soundings. The boring logs (refer to Appendix C) present the data obtained in the subsurface exploration. The logs include the surface elevations, the approximate depths and elevations of major changes in the character of the subsurface materials, visual descriptions of the materials in accordance with the criteria presented in Appendix D, groundwater data, the penetration resistance recorded in blows per 0.5-ft increments of depth, and the locations of undisturbed samples of soil. The locations and elevations (NAVD88) of the soundings and borings were determined by an HWS survey crew. Water level readings were made in the auger borings at times and under conditions stated on the boring logs.

III. LABORATORY ANALYSES

The split-barrel, undisturbed soil samples, and fly ash core samples obtained during the subsurface exploration were examined in the laboratory by a member of HWS' professional engineering staff to supplement the field identification. Standard tests were performed on selected samples to determine the engineering properties of the foundation, dike, natural seepage blanket, and fly-ash materials.

The moisture contents and dry unit weights of selected undisturbed soil samples were determined in the laboratory. These test results are presented in the boring logs opposite the respective sample locations. The moisture contents were determined in accordance with either ASTM D 4643, Standard Test Method for Determination of Water (Moisture) Content of Soil by the Microwave Oven Method, or ASTM D 2216, Standard Test Method for Determination of Water (Moisture) Content of Soil and Rock by Mass. The dry unit weights were determined in accordance with the Displacement Method of the Corps of Engineers, EM1110-2-1906, Appendix II, Unit Weights, Void Ratio, Porosity, and Degree of Saturation. These data correlate with the strength and compressibility of the soil. High moisture content and low density usually indicate low strength and high compressibility.

The unconfined compressive strengths of several undisturbed samples were estimated in the laboratory with a calibrated hand penetrometer. These strengths are presented on the boring logs and are estimates only. Actual values are generally lower than the estimated values indicated on the boring logs.

Washed sieve analyses were performed on four (4) samples of the subsurface materials. The results of these tests, performed in accordance with ASTM C 136, Standard Methods for Sieve Analysis of Fine and Coarse Aggregates, are presented in Table 1.

TABLE 1
Particle Size Distribution of Mineral Aggregates

Boring No.	Depth ft.	Total Percentage Finer by Weight										
		1"	3/4"	½"	3/8"	#4	#10	#20	#40	#50	#100	#200
B-9a	20.0-23.5	100	100	100	100	100	100	100	99.9	95.8	11.0	2.8
B-14	6.0-8.05	100	100	100	100	100	100	99.5	95.7	75.9	32.5	25.7
B-15	20.0-23.5	100	100	100	100	100	100	99.8	94.3	65.1	11.4	5.2
B-15x	9.5-10.5	100	100	100	100	99.7	99.6	98.5	93.5	69.6	31.9	26.3

The unconfined compressive strengths of four (4) undisturbed samples were determined in accordance with ASTM D 2166, Standard Test Method for Unconfined Compressive Strength of Cohesive Soil. These data are summarized in Table 2, and the complete test reports are presented in Appendix E.

TABLE 2
Unconfined Compression Test Data

Boring No.	Depth, ft	Moisture, %	Dry Density, lbf/ft^3	Unconfined Compressive Strength, $tons/ft^2$
B-1	4.7-5.3	18.1	98.1	0.5
B-9a	3.0-3.5	19.5	101.8	1.0
B-12	6.1-6.7	31.8	82.9	0.7
B-12	12.2-12.9	31.1	85.6	0.8

Unconsolidated, undrained triaxial compression tests were performed on three (3) samples of the subsurface materials to provide data on the shearing strength of these materials. The triaxial compression tests were performed in accordance with ASTM D 2850, Standard Test Method for Unconsolidated-Undrained Triaxial Compression Test on Cohesive Soils. Specimens were backpressure saturated prior to shearing. A summary of the test data is shown in Table 3, and the complete test reports are presented in Appendix F.

TABLE 3
Triaxial Compression Test Data

Boring No.	Depth ft.	Cohesion (c) lbf/ft^2
B-9a	17.2-17.8	588
B-14c	0.9-1.7	1872
B-15	5.5-6.1	1728

Five (5) crumb tests were performed on the subsurface materials. The crumb test is an indicator test used in the identification of dispersive soils. A summary of the test results is presented in Table 4.

TABLE 4
Dispersion Test Data

Boring No.	Depth ft	Moisture Content	Crumb-Test Grade[a]			
			2 min.	10 min	1 hr.	6 hrs.
B-9	0.8-1.9	Wet	1	1	1	1
B-9	2.5-3.5	Wet	1	1	1	1
B-9b	2.0-3.5	Saturated	1	1	1	1
B-12b	2.5-3.5	Wet	1	1	1	1
B-14	2.5-3.5	Wet	1	1	1	1

[a]Crumb-Test Grades:
1 - Nondispersive; 2 - Intermediate; 3 - Dispersive; 4 – Highly Dispersive

A constant-head permeability test was performed on one (1) remolded specimen of cohesionless soils. The test result is shown in Table 5.

TABLE 5
Permeability Test Data

Boring No.	Material Type	Depth ft	Coefficient of Permeability cm/sec
B-1	SM	3.5-5.0	2.0E-03

Seven (7) falling head permeability tests were performed on relatively undisturbed specimens of alluvial clay and silt and fly ash in accordance with Corp of Engineers, EM1110-2-1906, Appendix VII, Permeability Test Procedures. The test results are shown in Table 6.

TABLE 6
Falling Head Permeability Test Data

Boring No.	Depth ft	Material Type	Dry Density lbf/ft^3	Moisture Content, %	Coefficient of Permeability cm/sec
B-1	4.1-4.7	ML	98.3	19.0	8.0E-6
B-2	7.0-7.7	ML	95.1	24.0	1.6E-5
B-5b	1.4-1.9	ML	89.7	21.7	1.7E-4
B-9a	16.6-17.2	CH	75.3	43.7	1.1E-7
B-12b	1.4-1.8	CL	89.2	31.0	2.2E-7
B-14c	4.2-4.5	CH	94.0	27.1	3.5E-8
B-15	5.0-5.5	Fly Ash	81.2	54.9	1.2E-5

IV. GEOLOGY AND SITE CONDITIONS

The project site lies in the Dissected Till Plains section of Iowa, a part of the Central Lowland province of the Interior Plains physiographic division[1]. The project site is located on alluvial bottomlands adjacent to the Missouri River. It is HWS' understanding that a subsurface exploration was completed in 1960 for the site. Plan sheets from 1960 and 1961 indicate a general layout of the property but do not detail the ash disposal pond system. The materials encountered during this original investigation generally consisted of an upper cohesive layer of soil that ranged from approximately 2 to 8 feet in thickness/depth that is underlain with sandy materials to significant depth. The upper cohesive layer was comprised of relatively thin seams and beds of clays, lean clays, silty clays, and clayey silts materials. A 1961 plan sheet indicates a 100 year flood level of 1076.0 feet for the Missouri river adjacent the site.

A 1970 plan sheet provided HWS by Mid-American Energy (MAE) shows the approximate current configuration of Ash Disposal Units (Ponds) #1 and #2. The plan sheet indicates that Units #1 was to be excavated down to an elevation of 1074.0 feet. Unit #2 was to be excavated down to an elevation of 1069.0 feet or to the elevation required to obtain sufficient fill materials for the construction of access roads, railroad subgrades, and the Unit #2 ash disposal dikes. The plans do not indicate which soils may or may not be utilized for the construction of the dikes. A 1975 plan shows the approximate current configuration of Units #3A and #3B and indicates the unit bottoms were to be excavated to an elevation of 1072.5 feet or to such a lower elevation as may be necessary to obtain sufficient fill material for construction of access roads and ash dikes. The 1970 and 1975 plans show a dike cross section with a 10-foot-wide top of berm width having a finished surface elevation of 1085.0. The dikes were to be constructed having a 2[H]:1[V] slope on the inside of the dike and a 3[H]:1[V] slope on the outside of the dike. The plans also stated that the topsoil onsite was to be stripped

[1] Physiographic Provinces of North America, Map by A. K. Lobeck, 1948; The Geographical Press; Columbia University, New York

(approximately 6-inches), the elevation on the outside toe of the dikes was to be assumed at a natural grade of 1075.0 feet, and excavation and placing of compacted fill for the dikes was to be completed in accordance with Ebasco Specification IOWA N2-CH-1. MAE was not able to find Specifications for the construction of Ash Disposal Units #1, #2 or #3. Additional information provided on the Ash Pond Unit plan sheets indicate that the maximum water level within the ponds is to equal 1078.5 feet for all four units. Additional discussion regarding operating maximum pool elevation is presented in the "General Discussions" section of the Discussion and Recommendations section below.

HWS made a field reconnaissance to select exploratory locations. The field reconnaissance indicated that the dikes and fly-ash surfaces within the units was drastically different from those shown on the design plans. Field survey information obtained at fifteen (15) potential exploratory assessment locations provided information concerning the current configuration of the dikes and confirmed differences existent between the construction plans and existing conditions. The cross sections provided in Appendix B present the original dike cross section as described in the 1970 and 1975 plans in red. The actual existent ground surface at each cross-section is presented in green. As indicated in the cross sections, some locations (such as at cross-section locations H2-H2, K-K, and K2-K2) have cross sections similar to the original proposed construction plans. At a number of locations the existing cross-sections are significantly different from the original proposed cross-sections. Generally, additional fly ash has been constructed above and, in some cases, on both side of the original dike section at those locations where the current cross-section deviates significantly from the proposed construction plans. It should be noted, that subsurface exploratory borings performed at section G-G (located within the south berm of Ash Disposal Unit #2) indicate that only a portion of the original dike is existent. The upper portion of the dike at this exploratory location appears to have been removed, possibly by previous ash pond cleanout operations. In addition, for the depth that dike materials were encountered if would indicate that the original dike is not located

within or below the current approximately 45-foot-wide drive perceived to be the berm location but in fact is located within what surficially appears to be the sound end of the actual pond. Boring performed the day this report was being authored confirms the assumptions discussed immediately above.

The subsurface materials encountered to the depths investigated generally consisted of various thicknesses of fly ash (solidified and unsolidified), cohesive and granular fill overlying alluvium (lean and fat clays with varying sand contents; poorly graded, clayey, and silty sands; and silts)—in descending order of occurrence. Detailed descriptions are provided in the boring logs, which are presented in Appendix B.

Groundwater was encountered at borings 3, 9a, 9b, 12, and 12b at depths of 15.8, 20.7, 1.5, 6.0, and 1.0 feet below existing grade, respectively. Groundwater was not encountered to the depths of exploration at the other boring locations.

V. DISCUSSION AND RECOMMENDATIONS

General Discussion

A. Field Exploration:

HWS completed seven (7) soundings and eighteen (18) borings at six of the cross sections that HWS surveyed, (i.e., @ cross-section locations A-A, B-B, E-E, G-G, H2-H2, and K2-K2). The locations were selected to represent what visually appeared to be the most critical sections for each of the four units (#1, #2, #3A, and #3B) as well as to provide representative samples for lab testing and in situ testing information for the dike slope stability, underseepage, and liquefaction analyses completed for each of the units. Generally, at each of the locations selected for exploration, one or more borings were completed on top of the existing dike to confirm the presence, location, and physical soil characteristics of the original dike. In addition, the boring exploration, field testing and soil sampling were performed to delineate the extent that additional fly ash material had been used to construct existing grades above and around the original dike structure at each location. One or more borings were also performed at each of the selected exploratory locations to define the characteristics of the blanket materials located beyond the outside toe of dike --- outside of the Ash Disposal Unit. A boring (B-9) was performed approximately in the middle of the east dike of Unit #3B to establish whether dispersive soils were contributing to dike slope deterioration on the outside slope of the dike at this location (i.e., at approximately section L-L). A boring (B-5b) was completed adjacent the outside toe of dike at section M-M to represent the existing natural conditions onsite along the east and north sides of Unit 3B. Lastly the fly-ash within the north end of Unit #3A was cored (@ location C-4) to sample the solidified fly ash.

From the in situ testing completed in the field and laboratory testing described above, soil properties for the fly ash materials, dike fill materials, and the natural alluvium materials encountered onsite were determined and used to prepare models for slope stability,

underseepage, and liquefaction analyses performed at the locations selected for assessment as discussed immediately above. The following paragraphs provide discussion concerning the procedures used for each of the analyses performed and the findings of these analyses at each location assessed. In addition, recommendations are provided concerning operation requirements for satisfactory dike performance in the future, and dike rehabilitation.

B. Engineering Analyses Performed:

1. Embankment and Foundation Stability. The satisfactory performance of the dikes embankments and underlying foundation materials and their ability to avoid slope stability, underseepage, and/or liquefaction failure depend on 1) the strength of subsurface soils under maximum operating pool elevation within each unit, 2) the slopes of the original dikes constructed as well as those as they presently existing now and after the performance of clean-out operations within each of the units, 3) the permeability or transmissivity of water through the soils located under the dike at maximum operating pool elevations, and 4) the foundation soils ability to resist earthquake induced forces. The 100-year flood elevation of 1076.0 feet was also a consideration when performing the analyses performed at those locations adjacent to the river, drainage ditch, or adjacent fresh water ponds.

Specific discussion concerning each of the stability analyses that were performed (and discussed immediately above are as follows:

a. Embankment Slope Stability Analysis:

To establish the stability of both existing and proposed dike embankments, a computer-assisted slope stability analysis was performed at the six critical sections using the simplified Bishop method of slices with effective and total stress soil parameters. The U.S. Army Corps of Engineers recommends that the minimum factor of safety for dikes under long-term (drained) conditions be 1.4 and under short-term (undrained) conditions be 1.3.

A safety factor of 1.0 indicates that the driving forces are equal to the resisting forces and that failure is imminent. The slope stability analyses results for each unit are discussed below and reference should be made to the enclosed figures in Appendix G, which present the failure arcs having the lowest safety factors associated with the stability analyses performed at each critical section.

b. Seepage (Uplift) Stability Analysis:

The most common cause of dike failure, other than overtopping, is uplift at the land-side toe resulting from a high exit gradient in the water seeping under the dike. The occurrence of this form of dike failure is being assessed by the performance of a seepage analysis. Failure is defined as occurring when the pressure in the water at any point below the dike toe equals the buoyant weight of the soil above that point. This ratio of pressure to buoyant weight is called the critical exit gradient. During failure, the water lifts the soil and moves it out of the way. This shortens the distance the water must travel under the dike and causes more soil to be removed/eroded in the same manner. The Gradient Safety Factor is computed to define the potential for a seepage failure.

The Gradient Safety Factor (GSF) is calculated at the base of the natural --- most impervious --- soil blanket (if it exists) at the land-side toe of dike, where

$$GSF = \frac{\text{actual exit gradient}}{\text{critical exit gradient}}$$

The U.S. Army Corps of Engineers recommends that the minimum GSF at the land-side toe of the dike must be at 1.5 or greater.

For this dike, the GSF was calculated at the six critical sections, using the methodology of Turnbull and Mansur (1961), for the dike sections as they exist and for the proposed sections following "cleanout" operations with the units. The under seepage analysis for each unit is

discussed below and the calculations are summarized for the existing and anticipated sections in Appendix G.

c. Liquefaction Potential Analysis:

Dikes need to be evaluated for the potential of liquefaction during earthquake events. Liquefaction occurs when rapid vibrations in saturated sands cause a cyclical increase in pore water pressure at a point in the sand until the pore water pressure equals the total weight of the soil and water above that point. At that time, the sand and water at the point in question become a dense liquid, offering little resistance to flow resulting in an inability to support loads on the surface. This results in sand boils - where sand flows out of the ground, which on this project would result in spreading failures under and beyond the dikes.

The state-of-the-practice for evaluating liquefaction is consolidated in a paper called "Liquefaction Resistance of Soils: Summary Report from 1996 NCEER and 1998 NCEER/NSF Workshops on Evaluation of Liquefaction Resistance of Soils" chaired by T.L. Youd, that presents a consensus among many prominent experts in the field. In simple terms, the current methodology for predicting liquefaction potential is as follows:

1. Determine the largest probable earthquake for the site, with respect to intensity, magnitude, and maximum horizontal acceleration at the ground surface.

2. Calculate the liquefaction resistance of the layer in terms of the Cyclic Resistance Ratio (CRR) for the magnitude of the design earthquake.

3. Calculate the seismic demand on a soil layer, expressed in terms of the Cyclic Stress Ratio (CSR).

4. Determine the factor of safety as CRR/CSR, with corrections for sloping ground and for overburden pressure. A minimum safety factor of 1.5 was selected for the Recent deposits found onsite.

The United States Geologic Survey (USGS) Probable Seismic Hazard Deaggregation

?

was used for the determination of the design earthquake intensity for the site. The USGS provided a mean return time of 4975 years, the mean magnitude was 5.87 with a peak horizontal ground acceleration of 0.069 times gravity, or 69 cm/sec/sec.

CRR Considerations

The above referenced paper suggests that the prediction of liquefaction from standard penetration test (SPT) results is more accurate than predictions based on the results of the cone penetration test (CPT). For this reason and because SPT data for the site were much more plentiful, the SPT data were used exclusively. For use in the predictions, the SPT blow counts, N, had to be converted to $(N_1)_{60}$. $(N_1)_{60}$ are the SPT blow count normalized to an overburden of one atmosphere and a hammer energy efficiency of 60 percent. CRR is first calculated for clean sand and an earthquake magnitude of 7.5. Adjustments are then made for fines content and for the design magnitude.

CSR Considerations

The CSR is based on the maximum horizontal acceleration, the ratio of total vertical stress to effective vertical stress at the point of each SPT and a coefficient to account for the flexibility of the soil profile.

Factor of safety calculations for each SPT in sand are included in Appendix H (where? don't see)

Specific Discussion and Recommendations

As stated in the Geology and Site Conditions section above, the current operating maximum pool elevation for all four units is 1078.5 feet. MidAmerican has requested that HWS provide recommendations for consideration of a maximum operating pool elevation of greater than the 1078.5 feet elevation. The analyses findings discussed below were performed assuming a maximum operating pool elevation of 1082 feet, which allows for 3 feet of freeboard from the original design top of dike elevation of 1085 feet. In addition HWS analyzed the original minimum unit floor elevations and provided recommendations for any changes to these elevations for satisfactory ash disposal unit dike performance. The slope stability, seepage, and liquefaction analysis results and operating requirements for each unit are discussed below.

I. Ash Disposal Unit #1 Stability Analysis Findings and Operating Recommendations.

Unit #1 currently has a top of dike elevation on the north, south, and west sides ranging from approximately 1085 feet to 1089 feet and a unit floor elevation ranging from approximately 1066.5 feet to 1084 feet based on HWS survey data. At the time of our survey of the sections performed across the dikes in Unit #1 there was no measurable water within the unit at the four cross section locations. The Missouri River Water Surface elevation was 1055.7 feet.

Section E-E, located through/across the west dike of Unit #1 was the location selected for the performance of the slope stability, under seepage, and liquefaction analyses. Ash removal operations performed within Unit #1 have removed materials located within the Unit to a level upto 8 feet or lower than the original unit floor elevation.

A computer-assisted slope stability analysis was performed though the Unit #1 dike at this location assuming the base of the unit is excavated to this level (depth) and assuming a maximum operating pool elevation of 1082 feet. The calculated safety factor for drained (i.e., representing long term design conditions) and undrained (i.e., representing short term conditions) soil conditions was 1.8 and 2.2, respectively. These safety factors are both greater than the U.S. Army Corps of Engineers recommended minimum factor of safety for dikes under long-term (drained) conditions being 1.4 and under short-term (undrained) conditions being 1.3.

The minimum calculated gradient safety factor (GSF) computed as part of the seepage analysis was 0.6, which is significantly less than the U.S. Army Corps of Engineers recommendation that the minimum GSF at the land-side toe of the dike must be at 1.5 or greater. Mid-American Energy has informed HWS that water will never be allowed to fill Unit

#1 in the future. Given this condition seepage stability will not be an issue. However, if the decision is made to store waters in Unit #1 in the future it would be necessary to reconstruct the floor within this unit to its original plan elevation of 1074.0 feet, ideally using cohesive fill materials. In addition, it is recommended that the maximum water surface elevation within the cell be 1078.5 feet --- all to provide a GSF value of 1.5 or greater.

The "Liquefaction Resistance of Soils: Summary Report from 1996 NCEER and 1998 NCEER/NSF Workshops on Evaluation of Liquefaction Resistance of Soils" discussed above would recommend that the minimum safety factor required to avoid liquefaction is 1.5. The computed factor of safety for liquefaction was 2.9 which is greater than this Summary Report's recommended 1.5 value.

where is Appendix H?

II. Ash Disposal Unit #2 Stability Analysis Findings and Operating Recommendations.

Unit #2 is currently nearly full of fly ash and scheduled for cleanout and landfilling this summer of 2009. HWS survey data indicates that the current top of dike elevation is approximately equal to 1088 feet. and top of fly ash elevation is approximately 1084.5 feet along the south side of the Unit #2.

Section G-G, located through/across the south dike of Unit #2 was the location selected for the performance of the slope stability, under seepage, and liquefaction analyses for this unit. At the time of our survey at the location of section G-G there was no measurable water in Unit #2 and the elevation of the outlet channel water surface, to the south of Unit #2, was 1069.9 feet. The survey data indicates that the unit is currently "filled" to within approximately 0.5 feet of the top of dike elevation (1085.0 feet). Fly ash has been placed atop and to the south of the south dike. The surface elevation of the fly ash is 3 or more feet above the original proposed top of dike elevation of 1085.0 feet.

A computer-assisted slope stability analysis was performed though the Unit #2 dike at this Section G-G location. As previously stated, the fly ash in Unit #2 is scheduled for removal and landfilling during the Summer of 2009. HWS recommends that the fly ash removal operations be limited to removing those fly ash materials located above an elevation of 1072.5 feet to avoid creating under seepage stability issues. Assuming that the excavation operations are limited to those fly ash materials located above an elevation of 1072.5 and a maximum water surface elevation within Unit #2 of 1082 feet, the calculated safety factor for drained (i.e., representing long term design conditions) and undrained (i.e., representing short term conditions) soil conditions was 1.5 and 2.7, respectively. These safety factors are both greater than the U.S. Army Corps of Engineers recommended minimum factor of safety for dikes under long-term (drained) conditions being 1.4 and under short-term (undrained) conditions being 1.3.

Assuming that the fly ash excavation operations do not extend below an elevation of 1072.5 feet and that the maximum pool level in Unit #2 is 1082.0 feet the minimum calculated gradient safety factor (GSF) computed as part of the seepage analysis was 1.9 which is greater than the U.S. Army Corps of Engineers recommendation that the minimum GSF at the land-side toe of the dike must be at 1.5 or greater.

The "Liquefaction Resistance of Soils: Summary Report from 1996 NCEER and 1998 NCEER/NSF Workshops on Evaluation of Liquefaction Resistance of Soils" discussed above would recommend that the minimum safety factor required to avoid liquefaction is 1.5. The computed factor of safety for liquefaction was 4.1 which is greater than the Summary Report's recommended 1.5 value.

III. Ash Disposal Unit #3A Stability Analysis Findings and Operating Recommendations.

The north dike of Ash Disposal Unit #3A was selected for the performance of the slope stability, under seepage, and liquefaction analyses for this unit. The cross-section is

representative of dike conditions at this location are shown as Section B-B. The original dike constructed at this location has top of dike elevation of approximately 1087.0 feet. A second dike constructed of fly ash materials was constructed immediately adjacent to the original dike. The elevation of the top of the fly ash dike is approximately 1097.5 feet as shown on Section B-B.

A computer-assisted slope stability analysis was performed though the Unit #3A dike at this Section B-B location. For the sake of performing the stability analyses it was assumed that the two tiered dike system discussed above would remain. In addition it was assumed that fly ash removal operations within this unit would be limited to those materials located "above" an elevation of 1072.5 feet and the maximum water level in Unit #3A would be 1082.0 feet. Given these excavation and maximum water level elevations, the calculated safety factor for drained (i.e., representing long term design conditions) and undrained (i.e., representing short term conditions) soil conditions was 1.8 and 4.5, respectively. These safety factors are both greater than the U.S. Army Corps of Engineers recommended minimum factor of safety for dikes under long-term (drained) conditions being 1.4 and under short-term (undrained) conditions being 1.3.

Assuming that the fly ash excavation operations do not extend below an elevation of 1072.5 feet and that the maximum pool level in Unit #3A is 1082.0 feet the minimum calculated gradient safety factor (GSF) computed as part of the seepage analysis was 9.2 which is greater than the U.S. Army Corps of Engineers recommendation that the minimum GSF at the land-side toe of the dike must be at 1.5 or greater.

should examine section @ 1108" or offset on sw side

The "Liquefaction Resistance of Soils: Summary Report from 1996 NCEER and 1998 NCEER/NSF Workshops on Evaluation of Liquefaction Resistance of Soils" discussed above would recommend that the minimum safety factor required to avoid liquefaction is 1.5. The

computed factor of safety for liquefaction was 4.1 which is greater than the Summary Report's recommended 1.5 value.

IV. Ash Disposal Unit #3B-North Stability Analysis Findings and Operating Recommendations.

The north dike of Ash Disposal Unit #3B was selected as one of the locations for the performance of the slope stability, under seepage, and liquefaction analyses for this unit. The cross-section is representative of dike conditions at this location are shown as Section A-A. The original dike constructed at this location has top of dike elevation of approximately 1086 feet. A second dike constructed of fly ash materials was constructed immediately adjacent to the original dike. The elevation of the top of the fly ash dike is approximately 1091.5 feet as shown on Section A-A. Top of fly ash surface to the south of the fly ash dike is located at an elevation of approximately 1086.3 feet. No water was encountered in the unit to the limits of the cross-section performed at Section A-A.

A computer-assisted slope stability analysis was performed though the Unit #3B-North dike at the Section A-A location. For the sake of performing the stability analyses it was assumed that the two tiered dike system discussed above would remain. In addition it was assumed that fly ash removal operations within this unit would be limited to those materials located "above" an elevation of 1072.5 feet and the maximum water level in Unit #3B would be 1082.0 feet. Given these excavation and maximum water level elevations, the calculated safety factor for drained (i.e., representing long term design conditions) and undrained (i.e., representing short term conditions) soil conditions was 2.9 and 5.0, respectively. These safety factors are both greater than the U.S. Army Corps of Engineers recommended minimum factor of safety for dikes under long-term (drained) conditions being 1.4 and under short-term (undrained) conditions being 1.3.

Assuming that the fly ash excavation operations do not extend below an elevation of 1072.5 feet and that the maximum pool level in Unit #3B North is 1082.0 feet the minimum calculated gradient safety factor (GSF) computed as part of the seepage analysis was 2.9 which is greater than the U.S. Army Corps of Engineers recommendation that the minimum GSF at the land-side toe of the dike must be at 1.5 or greater.

The "Liquefaction Resistance of Soils: Summary Report from 1996 NCEER and 1998 NCEER/NSF Workshops on Evaluation of Liquefaction Resistance of Soils" discussed above would recommend that the minimum safety factor required to avoid liquefaction is 1.5. The computed factor of safety for liquefaction was 4.1 which is greater than the Summary Report's recommended 1.5 value.

V. Ash Disposal Unit #3B-South Stability Analysis Findings and Operating Recommendations.

Portions of the east and south dikes of Ash Disposal Unit #3B-South are similar in that the existing dikes at these locations are very near to the design dike cross-section. Fly ash excavation operations adjacent to the inside of the dikes have extended down to elevations varying between approximately 1074 and 1076 feet. Water level within the south portion of Unit #3B was located at approximately 1079 feet. The elevation of the water surface within New Lake located immediately adjacent outside edge of the east and south dikes of Unit #3B-South at these locations was approximately 1070 feet. The top of dike elevation at section K2-K2 is approximately 1085.5 feet which is approximately 0.5 feet above the design top of dike elevation. The top of dike elevation at section H2-H2 is approximately 1083 which is approximately 2 feet "below" the design top of dike elevation. Given the lower top of dike elevation, Section H2-H2 was selected for the performance of the slope stability, under seepage, and liquefaction analyses for Unit #3B-South.

A computer-assisted slope stability analysis was performed though the Unit #3B-South dike at the Section H2-H2 location. It was assumed that fly ash removal operations within this unit would be limited to those materials located "above" an elevation of 1072.5 feet and the maximum water level in Unit #3B-South would 1082.0 feet. Given these excavation and maximum water level elevations, the calculated safety factor for drained (i.e., representing long term design conditions) and undrained (i.e., representing short term conditions) soil conditions was 2.0 and 4.7, respectively. These safety factors are both greater than the U.S. Army Corps of Engineers recommended minimum factor of safety for dikes under long-term (drained) conditions being 1.4 and under short-term (undrained) conditions being 1.3.

Assuming that the fly ash excavation operations do not extend below an elevation of 1072.5 feet and that the maximum pool level in Unit #3B-South is 1082.0 feet the minimum calculated gradient safety factor (GSF) computed as part of the seepage analysis was 1.0 which is less than the U.S. Army Corps of Engineers recommendation that the minimum GSF at the land-side toe of the dike must be at 1.5 or greater. In order to increase the gradient factor of safety to a value above 1.5 in Unit #3B-South, HWS recommends that the maximum operating pool elevation should "not" be allowed to rise above an elevation of 1079.0 feet and that fly ash excavation operations performed within 50 feet of the "inside" faces of the Unit #3B-South dikes (within the inside of the ash disposal unit) "not" extend below an elevation of 1074.0 feet.

The "Liquefaction Resistance of Soils: Summary Report from 1996 NCEER and 1998 NCEER/NSF Workshops on Evaluation of Liquefaction Resistance of Soils" discussed above would recommend that the minimum safety factor required to avoid liquefaction is 1.5. The computed factor of safety for liquefaction was 1.6 which is greater than the Summary Report's recommended 1.5 value.

A. <u>Top of Dike Reconstruction Recommendation</u>: It is recommended that compacted fill be installed to raise the top of dike elevation along all portions of the Unit #3B-

South to 1085.0 feet. These fill materials should consist of cohesive fill soils placed in accordance with the compaction recommendations presented for dike reconstruction below.

B. Rip-Rap Dike Protection: The inside faces of the east and south dikes of Unit #3B-South currently have existing slopes steeper than the 2(H):1(V) original design slope. It is anticipated that wave action is causing these inside dike foreslopes to become eroded. The dikes have adequate cross-section at the locations surveyed. However, these inside dike slopes should be monitored for further erosion and loss of dike cross-section. It is recommended that rip-rap facing be installed on the inside face of the east and south dikes to avoid loss of dike cross-section resulting from wave action within Ash Disposal Unit #3B-South.

VI. Dike Erosion Caused by Potentially Dispersive Soils & Dike Rehabilitative Recommendations:

The results of the laboratory performed crumb testing performed on soil samples collected in the field in the areas where apparent erosion is occurring near section L-L (i.e., along a portion of the east dike of Unit #3B-North) indicate that the soils are not due to dispersive soil conditions. This does not preclude the possibility that dispersive soils might be present in areas not sampled as part of this investigation. Given the results of the soil testing performed on soil samples obtained from this portion of the east dike of Ash Disposal Unit #3B-North it is anticipated that the observed slope instability is the result of having constructed a significant portion of this section of dike using silty and/or sandy materials. These soils would be pervious which would facilitate seepage through the dike that would result in erosion of the soils on the landside of the dike. HWS recommends that the outer slope of the dike at this location be reconstructed to original plan dimension. The Soil Engineer should inspect these rehabilitative grading operations to further assess the nature and types of soils that were utilized to construct this portion of the dike at this location. The Soils Engineer should determine the extent of dike reconstruction required to remove and replace those portions of the

dike that are constructed of these highly permeable and erodible silty and/or sandy materials. The Soils Engineer should further inspect the dike rehabilitation operations in this area to further confirm that dispersive soils are not present. Field crumb tests could be performed to quickly determine if soils located outside of those sampled are dispersive in nature. Dispersive soil conditions can be stabilized using the following procedures. In areas were dispersive soils are present, HWS suggests that the outer 2 feet of existing dike soil materials located on the inside face (pond side) of the dike be stabilized by either A) mixing the dispersive soils with 6% fly ash (by dry weight of compacted soil), or B) replacing with non-dispersive *"cohesive"* lean clay soils derived from an off-site borrow location. The outside face of the dike should be reconstructed having the original 3(H):1(V) or flatter slope using cohesive non-dispersive soils. The fill materials used during reconstruction of this section of the dike should be compacted in accordance with the compaction recommendations presented in the general recommendations section below.

VII. Dike Erosion Caused by Sluice Water Discharged Into Unit #1 and Dike Rehabilitative Recommendations:

It was noted, during the field reconnaissance performed to determine field exploration locations, that sluice waters discharged into Unit #1 were eroding a portion of the inside face of the west dike. The direction that the sluice water was being discharged into the unit was adjusted to avoid further erosion of the west dike. It is recommended that the inside portion of the west dike of Unit #1 be reconstructed using compacted cohesive fill material. Recommendations concerning both the types of fill materials that should be used for the performance of this dike rehabilitative operations and their compactions are presented under VIII. General Findings and Rehabilitative Construction Recommendations, presented below. The Soils Engineer should observe the dike rehabilitative operations.

VIII. General Findings and Rehabilitative Construction Recommendations:

A. Types of Soils to be used as Fill and Backfill. Controlled earth fill used to reconstruct dike embankments should be constructed of cohesive, inorganic, nondispersive lean clay materials having a maximum liquid limit of 50 and a maximum plasticity index of 30. Borrow materials proposed for use as controlled earth fill should be tested to verify their material characteristics and to verify that they are "nondispersive".

Proposed fill and backfill materials should be subject to approval by the Geotechnical Engineer. Representative samples of the proposed fill and backfill materials should be submitted to the Geotechnical Engineer at least three days prior to placement so the necessary laboratory tests can be performed.

B. Placement of Fill and Backfill. The suggested basis for controlling the placement of fill and backfill on the site, excluding free-draining granular materials, are the "optimum moisture content" and "maximum dry density" as determined by ASTM D 698, Procedure A, Standard Test Methods for Laboratory Compaction Characteristics of Soil Using Standard Effort (12,400 ft-lbf/ft^3) (600 kN-m/m^3). The recommended acceptable values of moisture content and degree of compaction are given in Table 7.

TABLE 7
Compaction Recommendations of Controlled Earth Fill and Backfill

Location	Soil Type	Minimum Moisture Content	Minimum Compaction*
	Glacial Till	Optimum	95%
Dike Embankment Reconstruction And General Fill Placement Outside Of the Ash Pond Units	Silty and Lean Clays	1% Below Optimum	95%

* Percent of Maximum Dry Density (ASTM D 698-00a, Procedure A)
** Moisture as necessary to obtain density (near Optimum)

C. Grading Observation. Observation and frequent testing by the Geotechnical Engineering Firm during compaction of fill and backfill are necessary to verify proper moisture content and degree of compaction. A professional opinion should be obtained from the Geotechnical Engineer that the site has been properly prepared, and that all fill, backfill, and subgrade materials conform to the moisture content and compaction recommendations presented above. As the Geotechnical Engineer for this project, HWS has interpreted the results of the subsurface exploration and laboratory tests to arrive at the recommendations presented in this report. Consequently, HWS is in the best position to relate actual observed conditions to those assumed for this report and to provide revised recommendations if differences are found during grading operations for the referenced project.

D. Ash Disposal Units Fly Ash Excavation Removal Operation Limits: As discussed earlier in this report, fly ash materials are periodically excavated from the Ash Disposal Units and placed within a landfill located to the south of the units. It is recommended that fly ash excavation operations be limited to those fly ash materials located 25 "or more" feet inside the interior faces of the original constructed dikes. The original constructed dike locations should be established prior to the performance of the fly ash excavation operations. Their locations may not be as perceived by visual site observation. The center of the south dike of Unit #2 was believed to be located approximately 15 to 25 feet north of the south shoulder point along the south side of this ash disposal unit. Field exploration was required to verify its actual location, which was found to be approximately 50 to 60 feet north of the existing south shoulder point along the south side of Ash Disposal Unit #2.

E. Applicability of Recommendations. The recommendations presented in this report are based in part upon HWS' analyses of the data from the Dutch friction-cone soundings and soil borings. The penetration diagrams, boring logs, and related information depict subsurface conditions only at the specific sounding and boring locations and at the time of the subsurface exploration. Soil conditions may differ between the soundings and exploratory

borings and might change with the passage of time. The nature and extent of any variations between the sounding and boring locations or of any changes in soil conditions (e.g., variability of the soils used to construct the original dikes) might not become evident until grading operations or as further exploration is performed in the future. If variations and changes in the soil conditions then appear, it will be necessary to re-evaluate the recommendations stated in this report.

VI. CONCLUSIONS

HWS concludes, on the basis of the findings of the subsurface exploration at the project site and the evaluation of the engineering properties of samples of the subsurface materials, that the stability of existing dikes, both under current and future conditions will be adequate if the recommended operating conditions summarized in Table 8 below are utilized.

TABLE 8
Recommended Fly Ash Containment Unit Operating Conditions

Ash Disposal Unit No.	Maximum Operating Pool Elevation (ft)*	Minimum Unit Floor Elevation After Excavattion (ft)
1	1078.5**	1074.0
2	1082.0	1072.5
3A	1082.0	1072.5
3B-North	1082.0	1072.5
3B-South	1079.0**	1074.0

*Assumes a minimum original top of dike elevation of 1085.0 feet is maintained or re-established.
**Maximum Operating Pool Elevation is lower than 1082.0 feet to satisfy minimum Gradient Safety Factor.

Dispersive soils were not encountered in our investigation, but could be present and should be dealt with as recommended, if encountered.

The existing dikes in the vicinity of Sections D2-D2 and L-L should be reconstructed utilizing cohesive compacted fill materials constructed of soils placed in accordance with the compaction recommendations presented in this report.

Fly ash excavation operations periodically performed within the Ash Disposal Ponds should be maintained a minimum of 25 feet away from the inside face of the original dikes. The original dike locations should be established prior to commencement of these excavation operations.

Rip-rap materials should be installed on the inside face of both the east and south dikes of Unit #3B-South if wave action causes additional erosion of the inside faces of these dikes.

This report has been prepared in accordance with generally accepted soil engineering practices for exclusive use by the MidAmerican Energy Company for specific application to the fly ash containment dike assessment study. The recommendations of this report are not valid for any other purpose.

HWS should be contacted if any questions arise concerning this report or if changes in the nature, design, or location of the dikes operations are planned. If any such changes are made, the conclusions and recommendations contained in this report shall not be considered valid unless the changes are reviewed by HWS and the conclusions of this report are modified or verified in writing. This report shall not be reproduced, except in full, without the written approval of HWS Consulting Group Inc.

Submitted By

HWS CONSULTING GROUP INC.

Prepared By:

Brandon L. Desh, P.E.

LICENSED PROFESSIONAL ENGINEER
BRANDON L. DESH
19195
6-15-09
IOWA

Reviewed By:

Gary E. Proskovec, P.E.

APPENDIX A. BORING LOCATION PLAN

CROSS SECTION REFERENCE PLAN

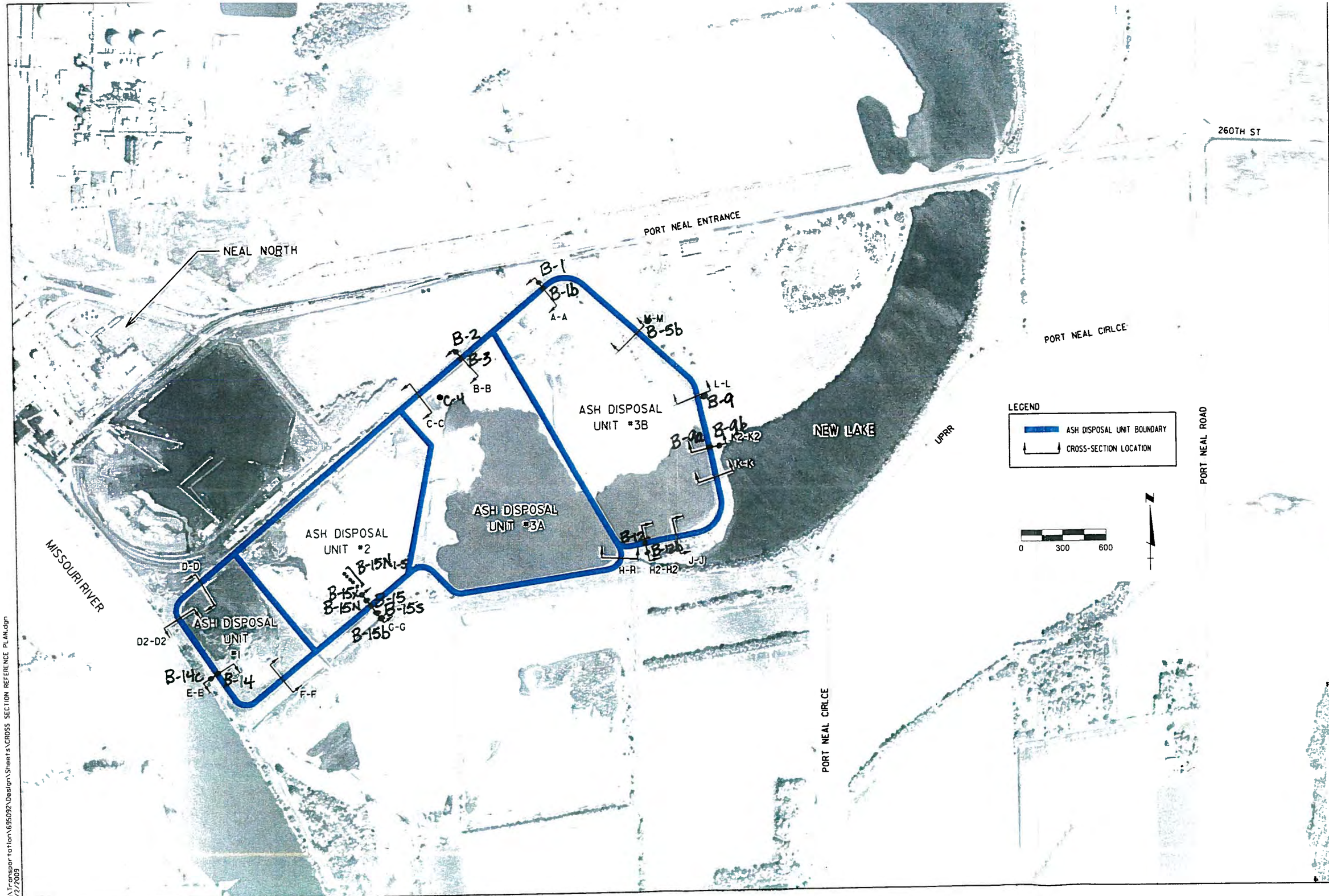

MidAmerican ENERGY

LINCOLN OFFICE
825 J St., Box 80336
Lincoln, NE 68501
(402) 479-2700
www.hws.com

HWS

SCALE: AS NOTED
DATE: JUNE 2009
JOB NO. 52 69 5082
SHEET NO. 2

F:\Transportation\695092\Design\Sheets\CROSS SECTION REFERENCE PLAN.dgn
6/2/2009

APPENDIX B. VICINITY MAP AND DIKE CROSS SECTIONS

PORT NEAL POWER PLANT
ASH DISPOSAL DIKE
STABILITY ASSESSMENT
JUNE 2009

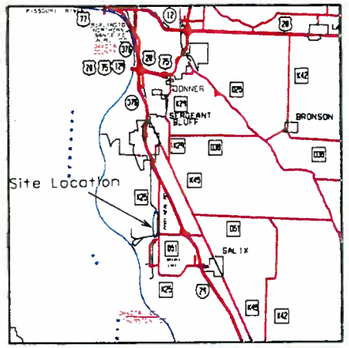

Vicinty Map

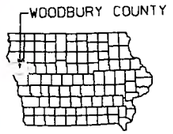

SHEET INDEX

1 - COVER SHEET
2 - CROSS SECTION REFERENCE PLAN
3 - CROSS SECTION SHEETS

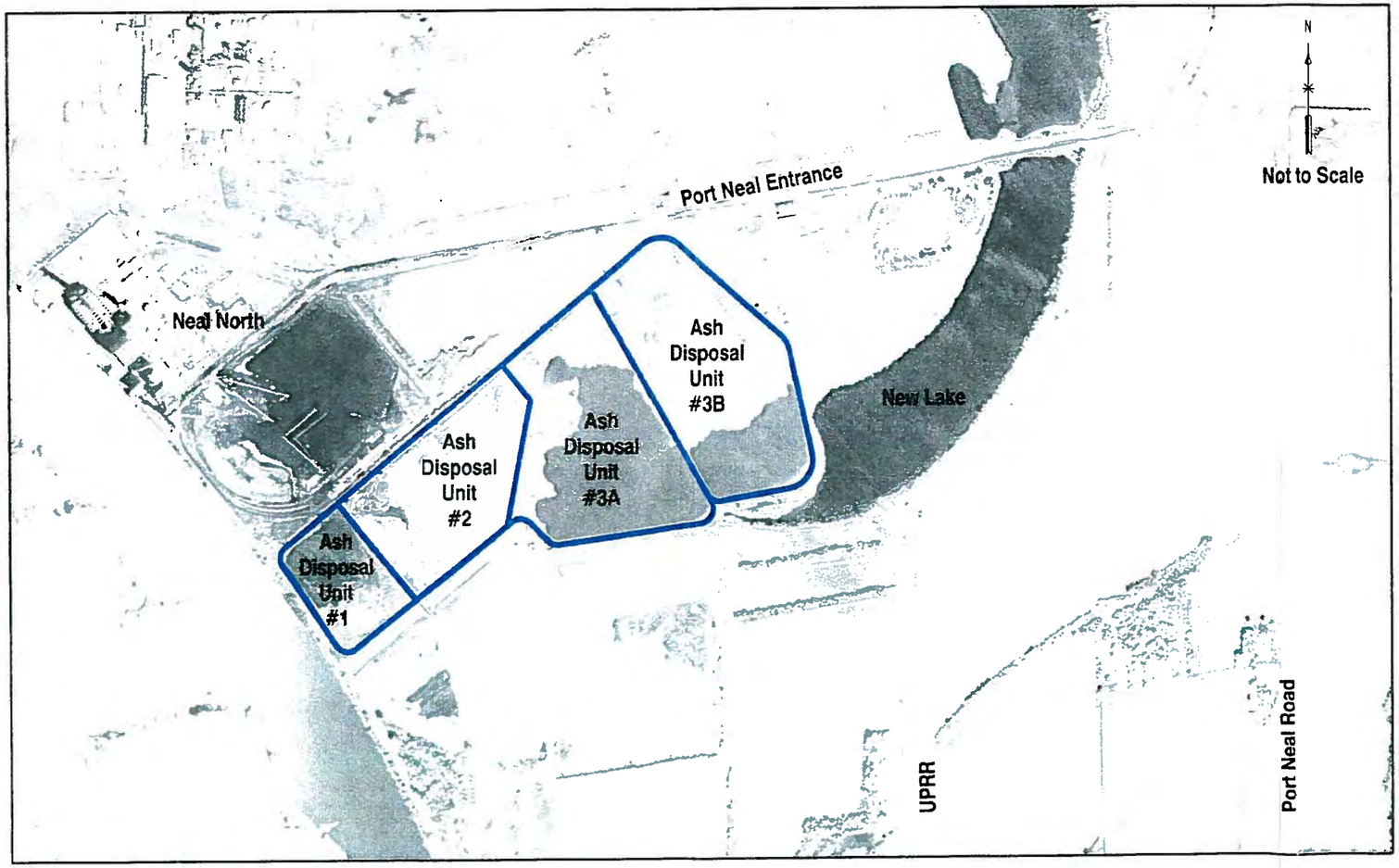

COVER SHEET

MidAmerican ENERGY

LINCOLN OFFICE
625 J St., Box 80358
Lincoln, NE 68501
(402) 435-2200
www.hws.com
HWS

SCALE: NOT TO SCALE
DATE: JUNE 2009
JOB NO.: 52-69-5092
SHEET NO.: 1

F:\Transportation\695092\Design\Sheets\COVER SHEET.dgn
6/12/2009

CROSS SECTION REFERENCE PLAN

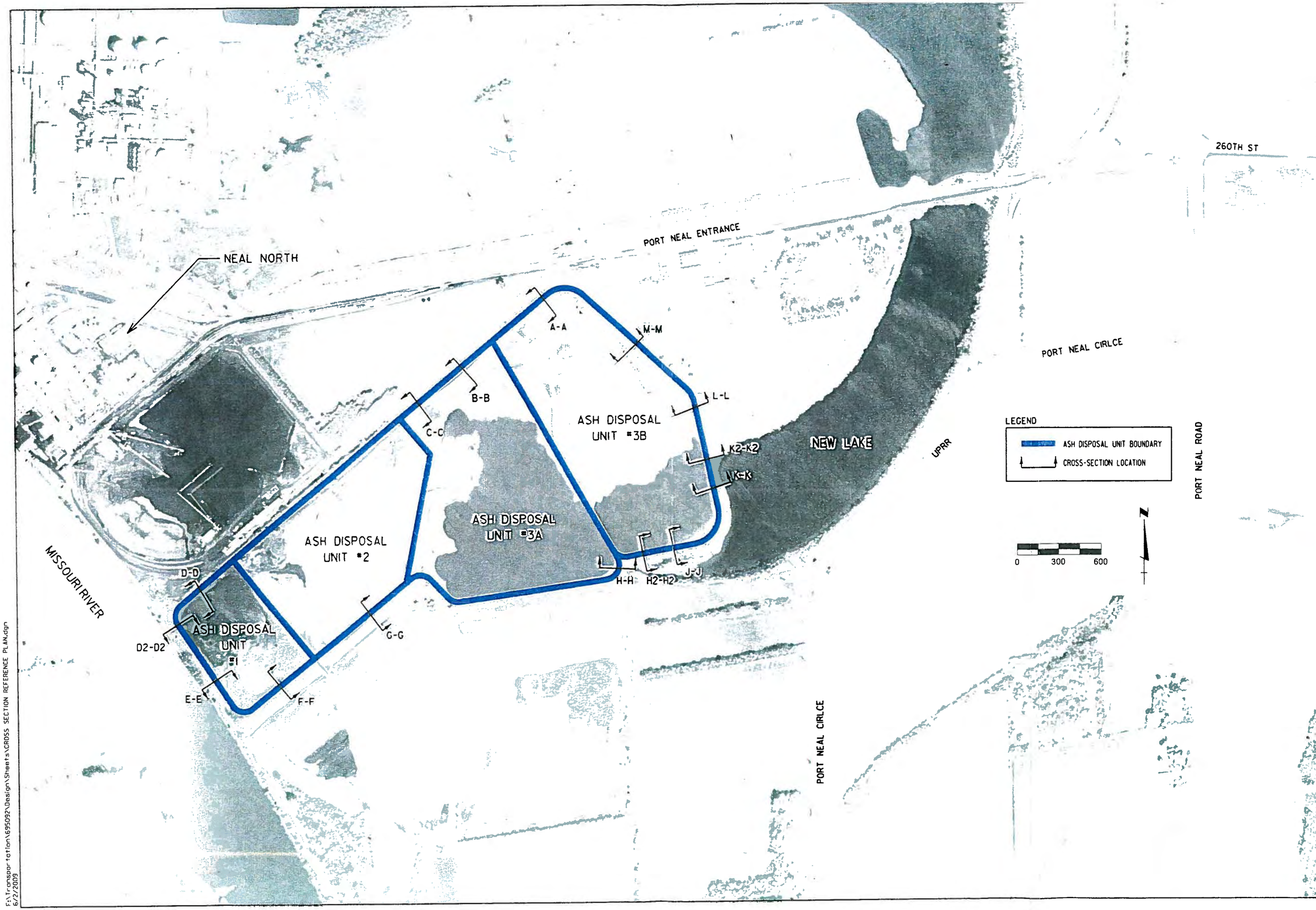

F:\Transportation\695092\Design\Sheets\CROSS SECTION REFERENCE PLAN.dgn
6/2/2009

MidAmerican ENERGY

HWS

LINCOLN OFFICE
825 J St., Box 80358
Lincoln, NE 68501
(402) 479-2200
www.hws.com

SCALE: AS NOTED
DATE: JUNE 2009
JOB NO.: 52 69 5092
SHEET NO.: 2

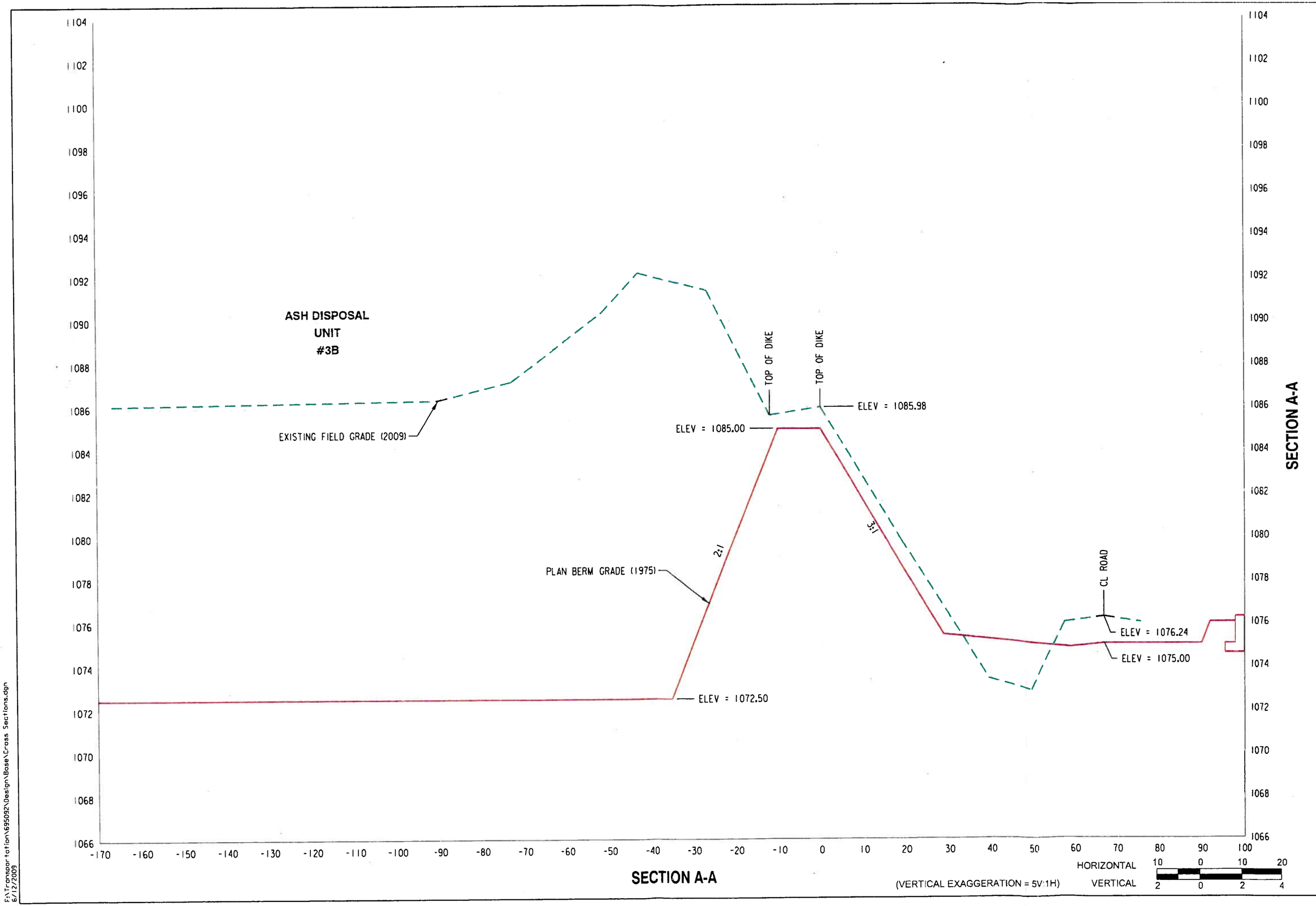

SECTION A-A

SECTION A-A

CROSS SECTIONS

MidAmerican ENERGY

LINCOLN OFFICE
825 J St., Box 80338
Lincoln, NE 68501
(402) 479-2200
www.hws.com

HWS

SCALE AS NOTED

DATE JUNE 2009

JOB NO. 52-69-5082

SHEET NO. 3

F:\Transportation\695092\Design\Base\Cross Sections.dgn
6/12/2009

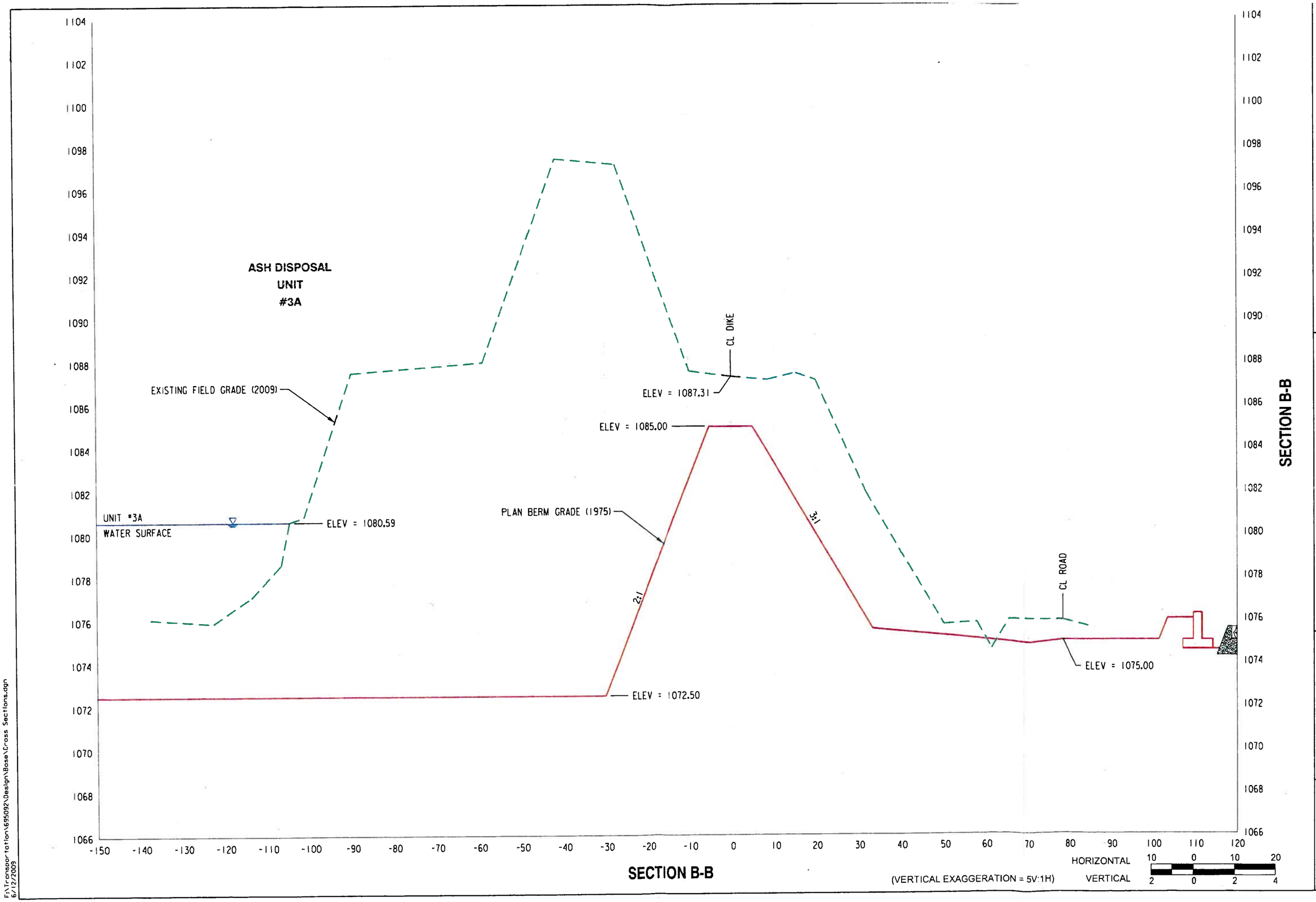

SECTION B-B

(VERTICAL EXAGGERATION = 5V:1H)

SECTION B-B

CROSS SECTIONS

MidAmerican ENERGY

LINCOLN OFFICE
825 J St., Box 80358
Lincoln, NE 68501
(402) 479-2200
www.hws.com

HWS

SCALE AS NOTED

DATE JUNE 2009

JOB NO. 52-69-5092

SHEET NO. 4

F:\Transportation\695092\Design\Base\Cross Sections.dgn
6/12/2009

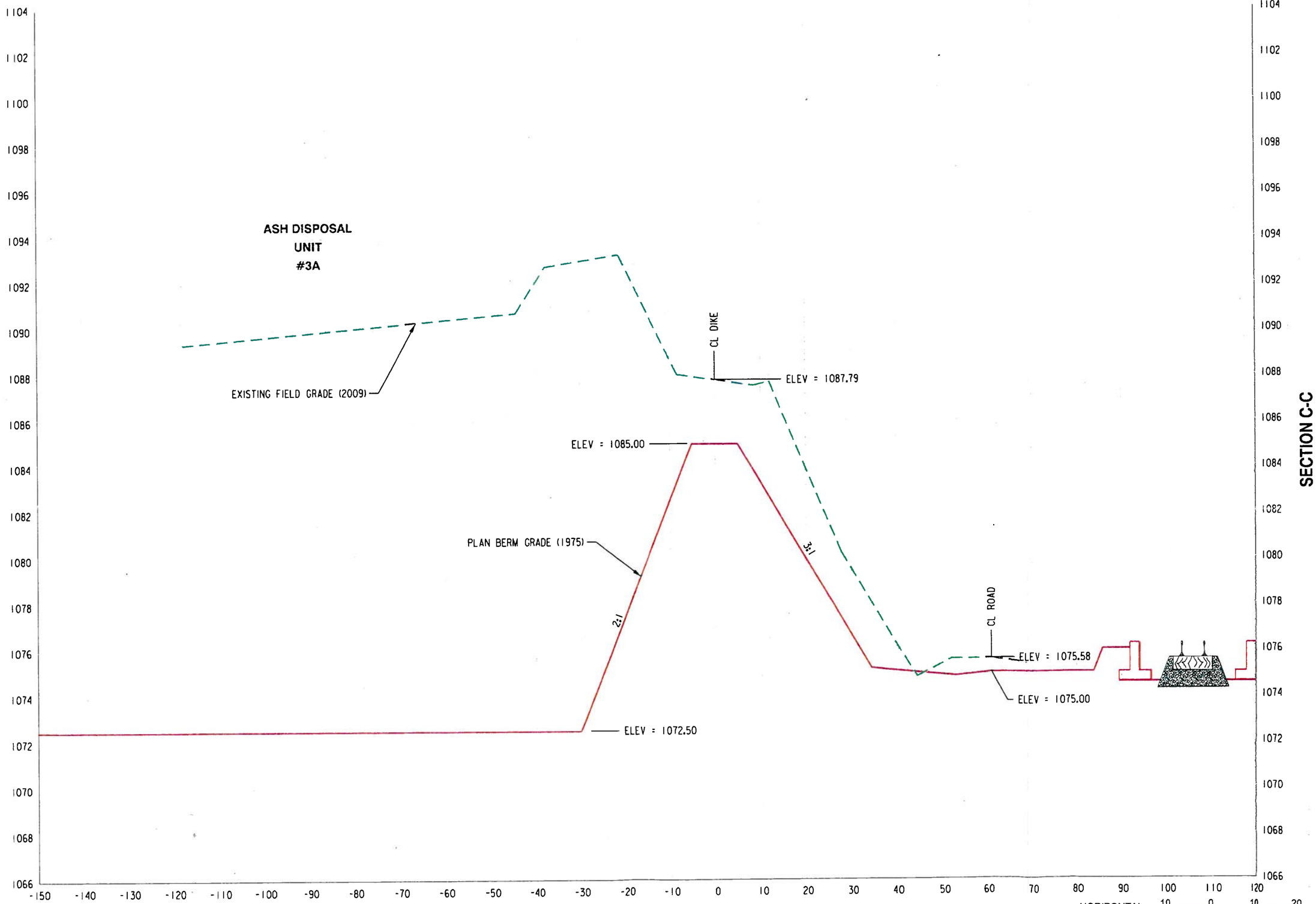

SECTION C-C

(VERTICAL EXAGGERATION = 5V:1H)

SECTION C-C

CROSS SECTIONS

MidAmerican ENERGY

LINCOLN OFFICE
823 J St., Box 80039
Lincoln, NE 68501
(402) 476-2200
www.hws.com

HWS

SCALE AS NOTED

DATE JUNE 2009

JOB NO. 52-69 5092

SHEET NO. 5

F:\Transportation\695092\Design\Base\Cross Sections.dgn
6/12/2009

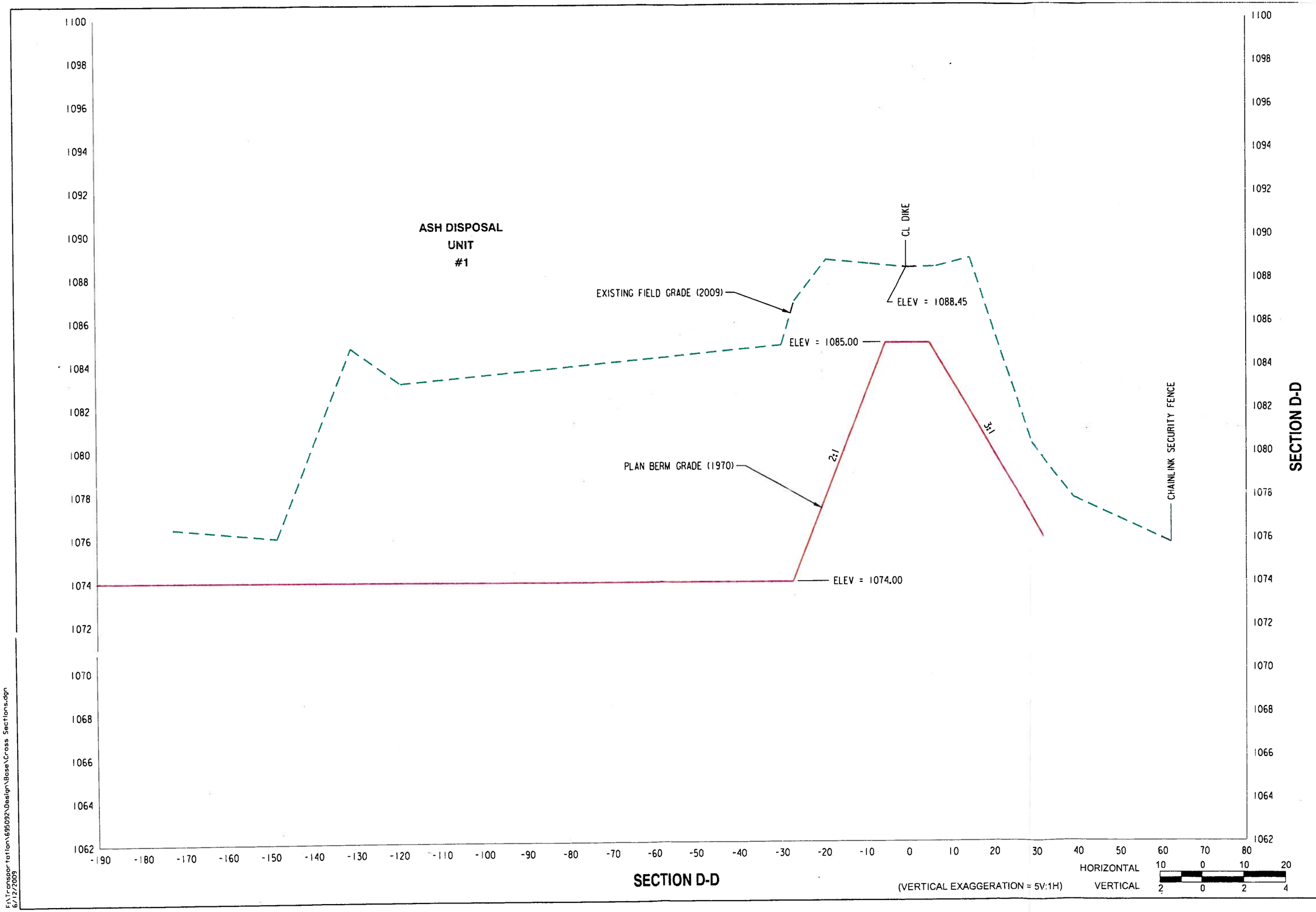

CROSS SECTIONS

SECTION D-D

MidAmerican ENERGY

LINCOLN OFFICE
825 J St., Box 80358
Lincoln, NE 68501
(402) 479-2200
www.hws.com

HWS

SCALE AS NOTED

DATE JUNE 2009

JOB NO. 52-69-5092

SHEET NO. 6

E:\Transportation\695092\Design\Base\Cross Sections.dgn
6/12/2009

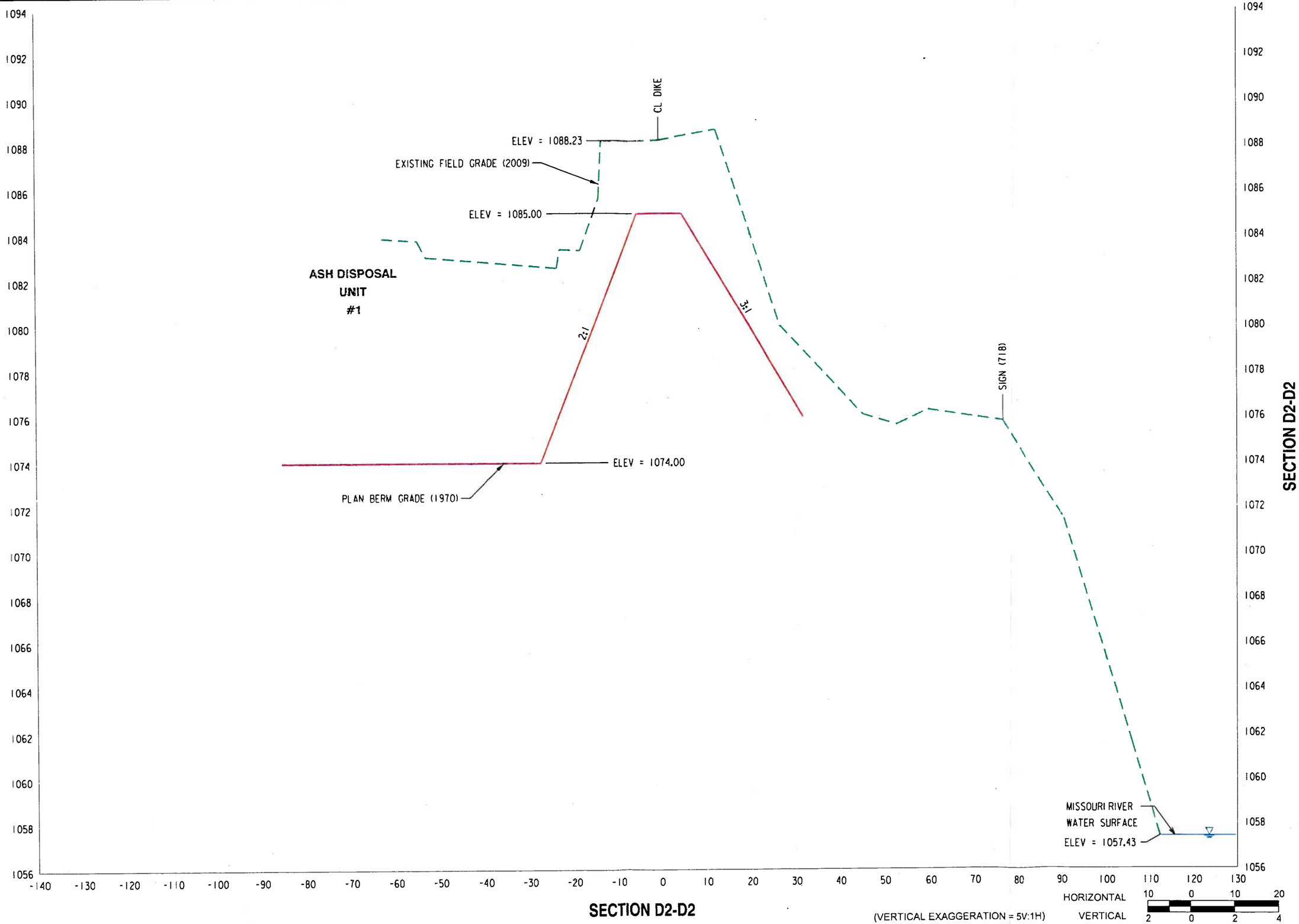

SECTION D2-D2

(VERTICAL EXAGGERATION = 5V:1H)

SECTION D2-D2

CROSS SECTIONS

MidAmerican ENERGY

LINCOLN OFFICE
825 J St., Box 80358
Lincoln, NE 68501
(402) 479-2200
www.hws.com

HWS

SCALE AS NOTED

DATE JUNE 2009

JOB NO. 52-69 5092

SHEET NO. 7

F:\Transportation\695092\Design\Base\Cross Sections.dgn
6/12/2009

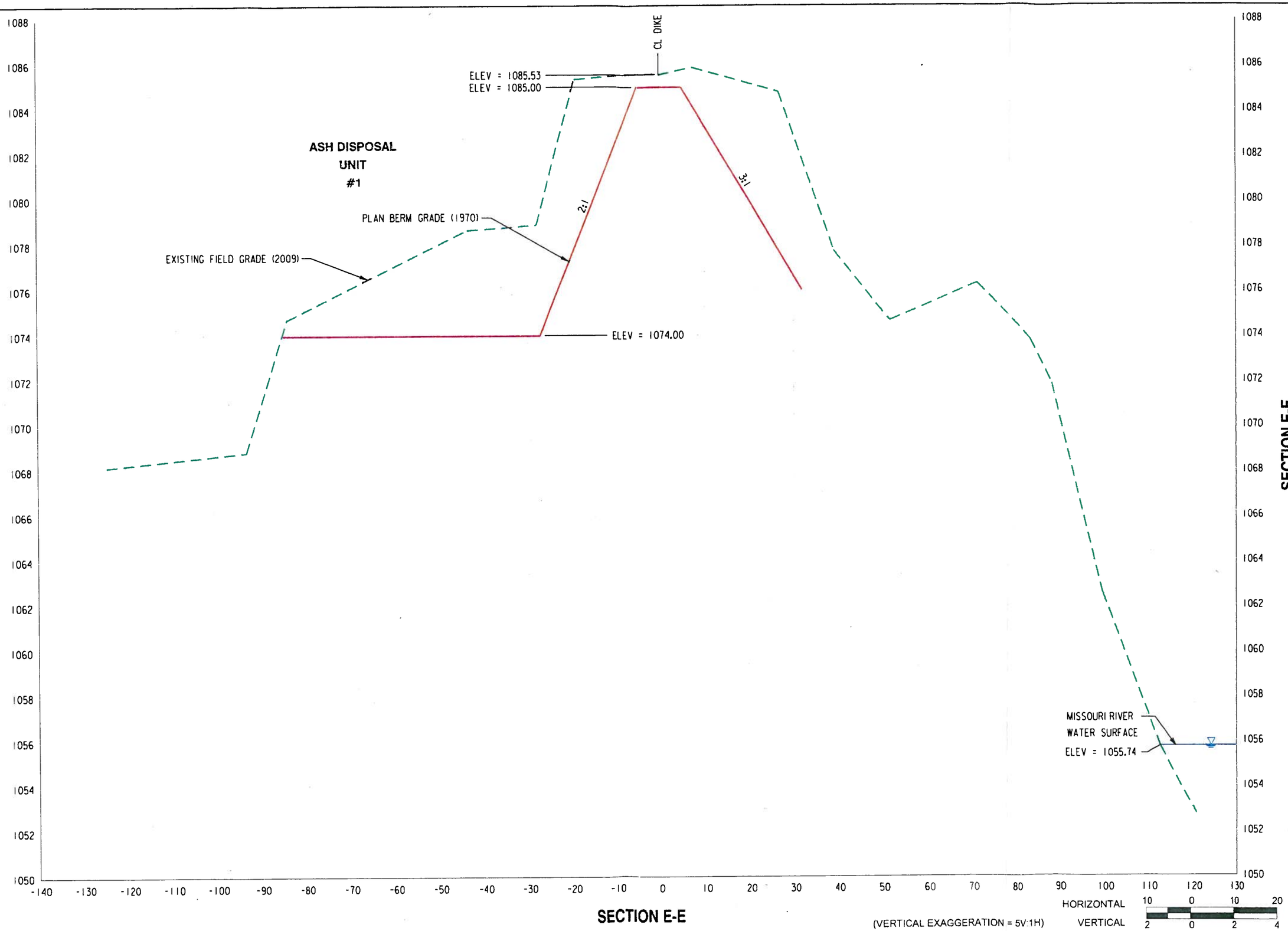

SECTION E-E

(VERTICAL EXAGGERATION = 5V:1H)

CROSS SECTIONS

SECTION E-E

MidAmerican ENERGY

HWS

LINCOLN OFFICE
825 J St., Box 85358
Lincoln, NE 68501
(402) 479-2200
www.hws.com

SCALE AS NOTED

DATE JUNE 2009

JOB NO. 52-69 5092

SHEET NO. 8

F:\Transportation\695092\Design\Base\Cross Sections.dgn
6/12/2009

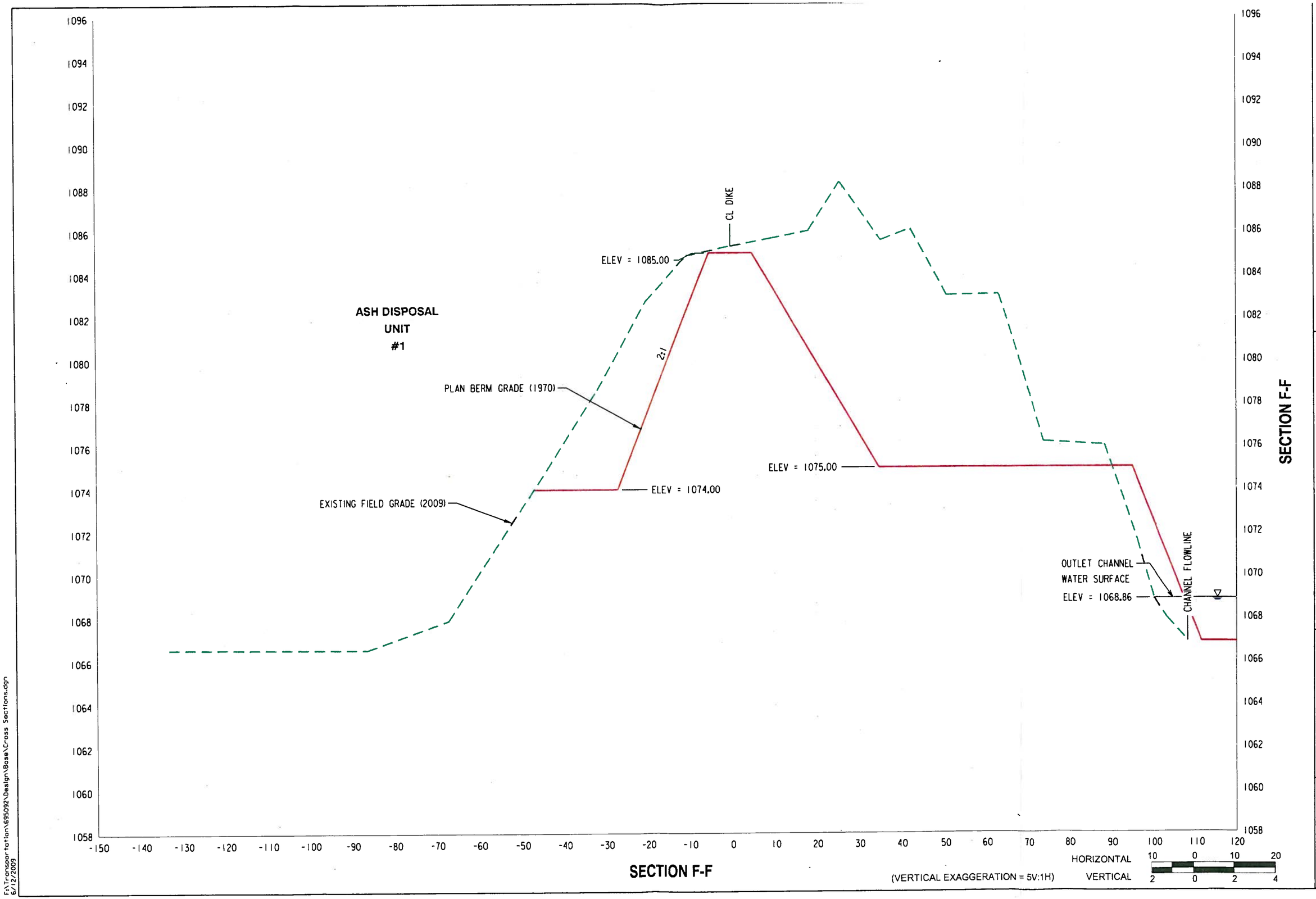

SECTION F-F

SECTION F-F

CROSS SECTIONS

MidAmerican ENERGY

HWS

LINCOLN OFFICE
825 J St., Box 80358
Lincoln, NE 68501
(402) 479-2200
www.hws.com

SCALE AS NOTED

DATE JUNE 2009

JOB NO. 52 69-5092

SHEET NO. 9

F:\Transportation\695092\Design\Base\Cross Sections.dgn
6/12/2009

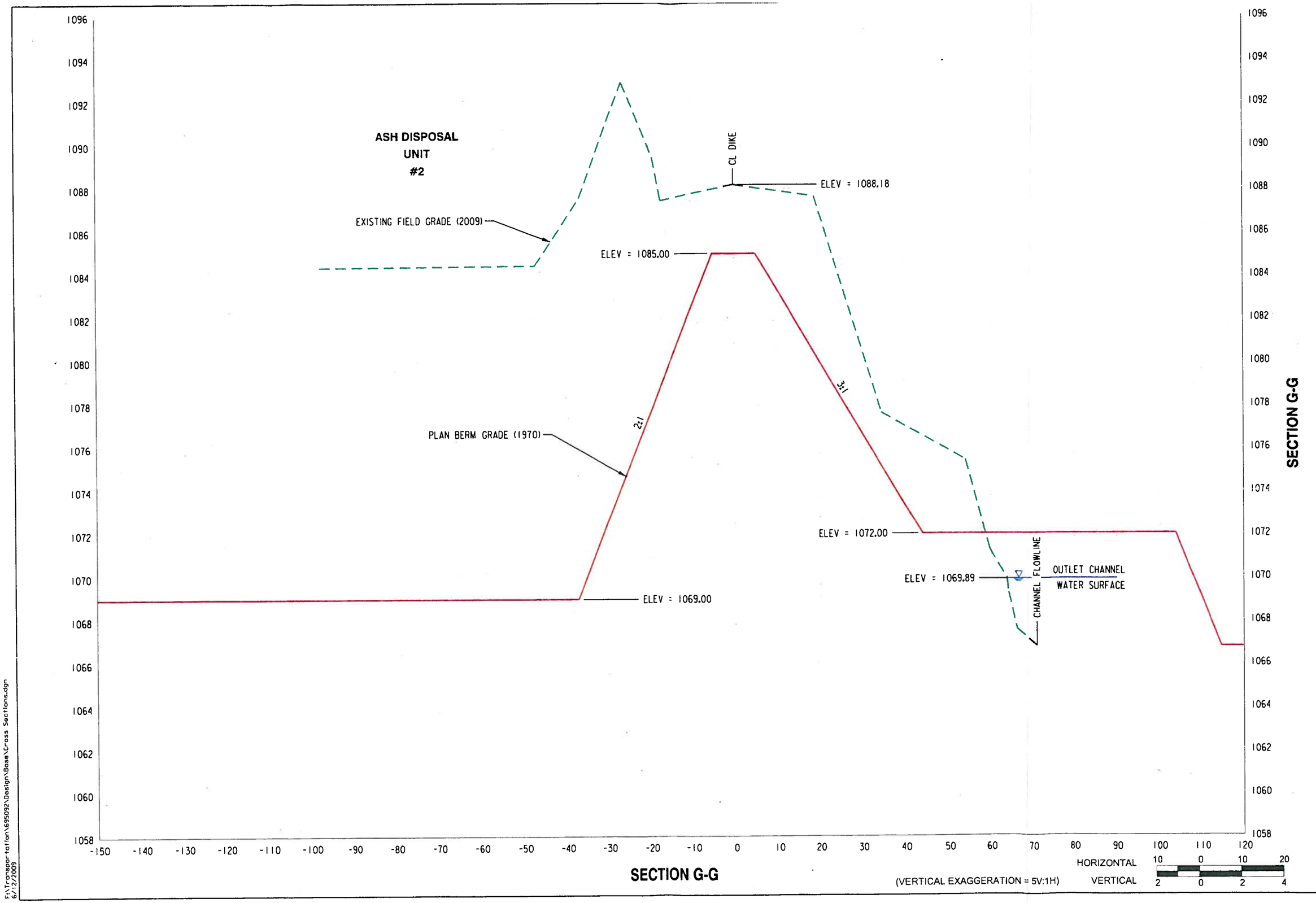

SECTION G-G

SECTION G-G

CROSS SECTIONS

MidAmerican ENERGY

HWS

LINCOLN OFFICE
825 J St., Ste 80038
Lincoln, NE 68501
(402) 476-2200
www.hws.com

SCALE AS NOTED

DATE JUNE 2009

JOB NO. 52-69-5092

SHEET NO. 10

F:\Transportation\695092\Design\Base\Cross Sections.dgn
6/12/2009

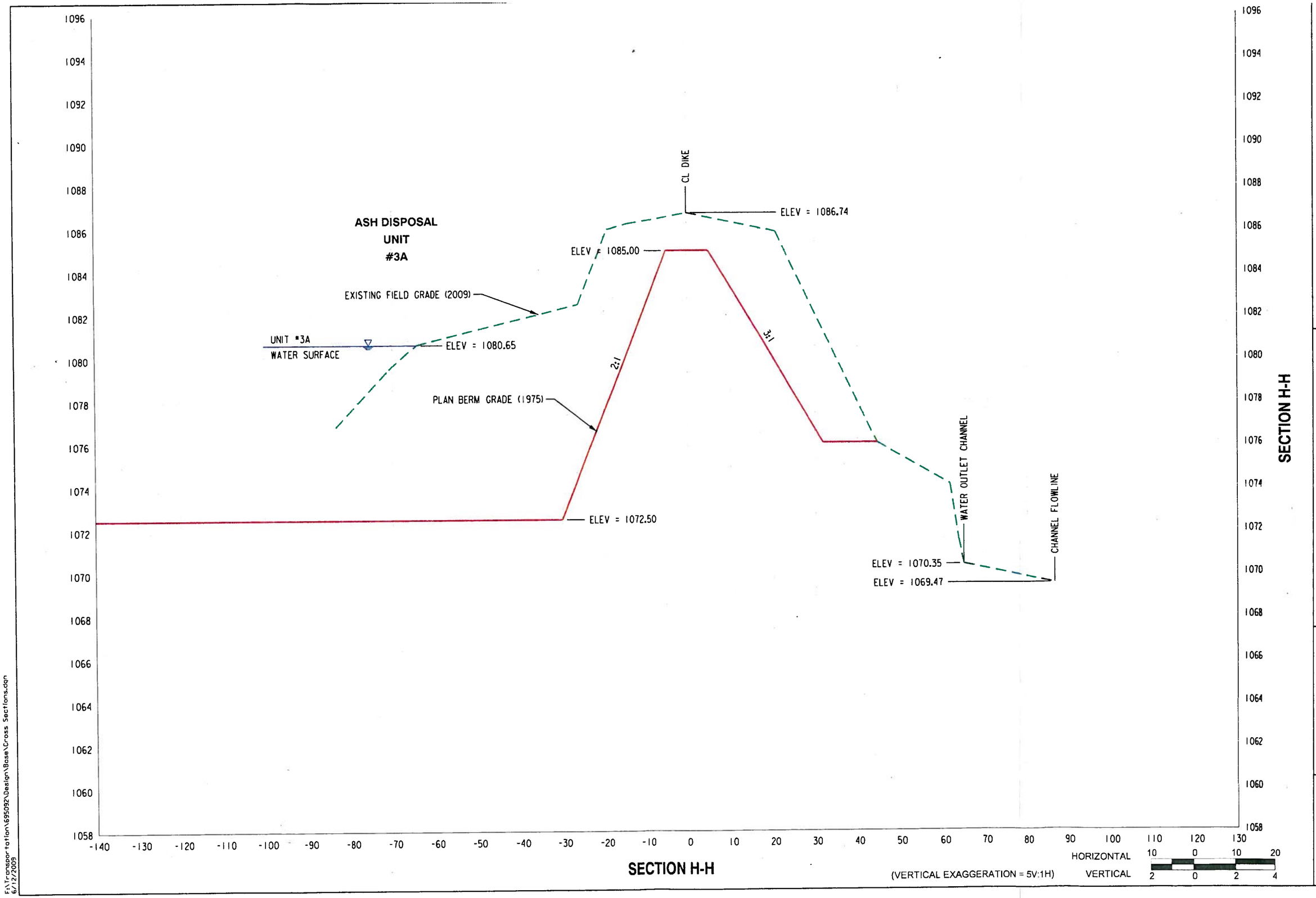

SECTION H-H

(VERTICAL EXAGGERATION = 5V:1H)

CROSS SECTIONS

SECTION H-H

MidAmerican ENERGY

LINCOLN OFFICE
825 J St., Box 80304
Lincoln, NE 68501
(402) 479-2200
www.hws.com

HWS

SCALE AS NOTED

DATE JUNE 2009

JOB NO. 52-69 5092

SHEET NO. 11

F:\Transportation\695092\Design\Base\Cross Sections.dgn
6/12/2009

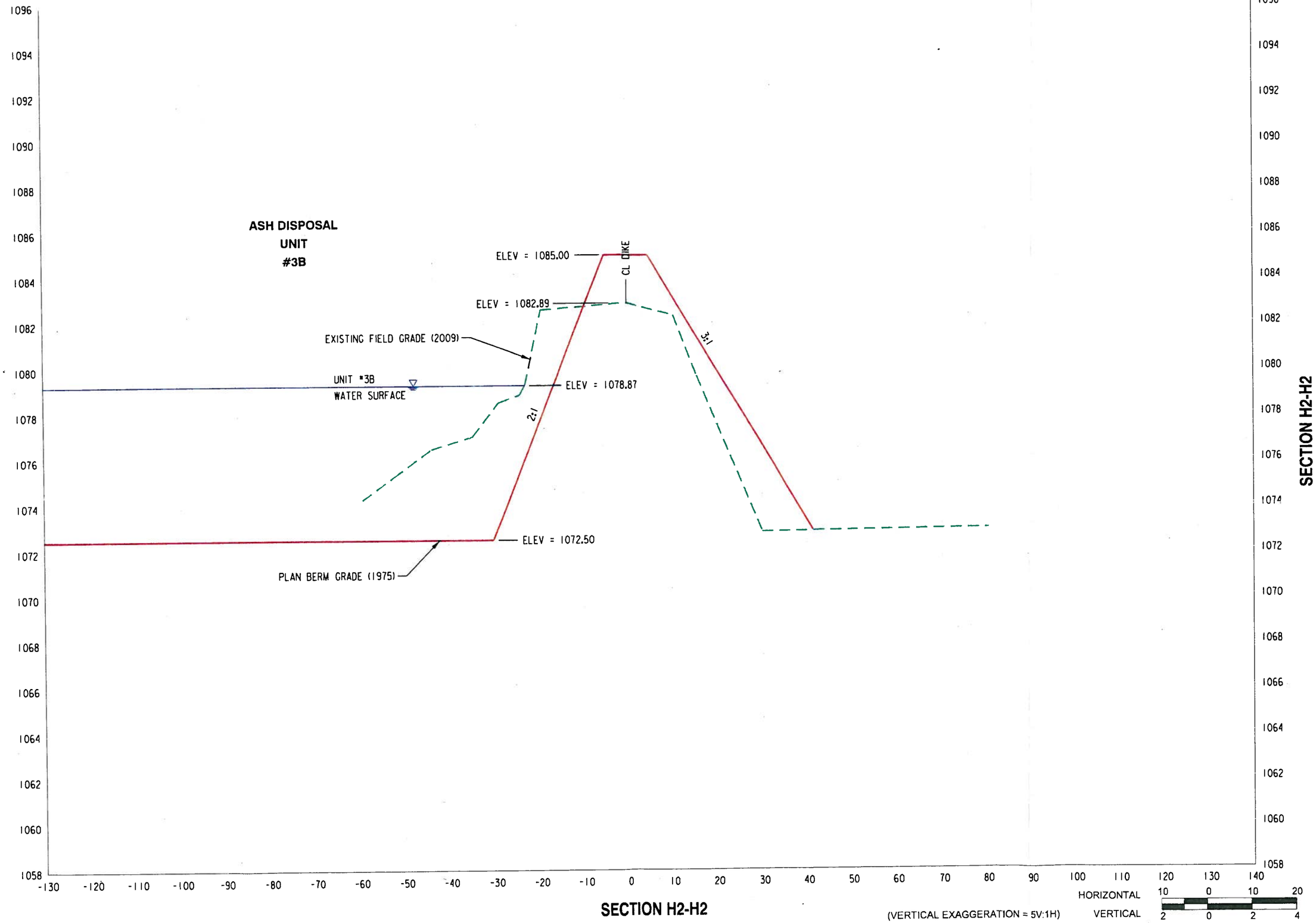

SECTION H2-H2

(VERTICAL EXAGGERATION = 5V:1H)

SECTION H2-H2

CROSS SECTIONS

MidAmerican ENERGY

LINCOLN OFFICE
825 J St., Box 80358
Lincoln, NE 68501
(402) 479-2200
www.hws.com

HWS

SCALE AS NOTED

DATE JUNE 2009

JOB NO. 52-60-5082

SHEET NO. 12

F:\Transportation\695092\Design\Base\Cross Sections.dgn
6/12/2009

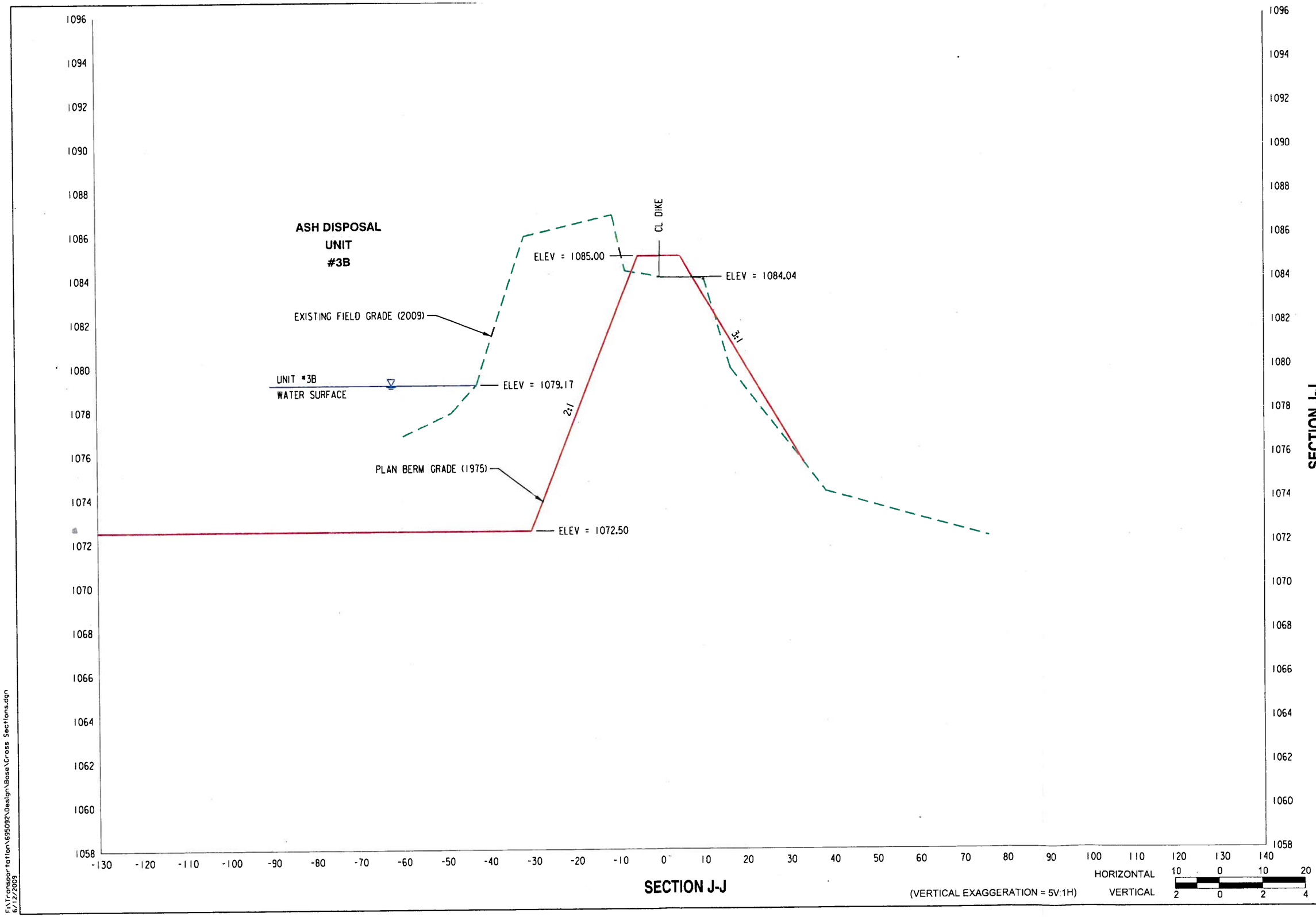

SECTION J-J

(VERTICAL EXAGGERATION = 5V:1H)

SECTION J-J

CROSS SECTIONS

MidAmerican ENERGY

HWS

LINCOLN OFFICE
825 J St., Ste 60338
Lincoln, NE 68501
(402) 435-2200
www.hws.com

SCALE AS NOTED

DATE JUNE 2009

JOB NO. 52-69-5082

SHEET NO. 13

F:\Transportation\695092\Design\Base\Cross Sections.dgn
6/12/2009

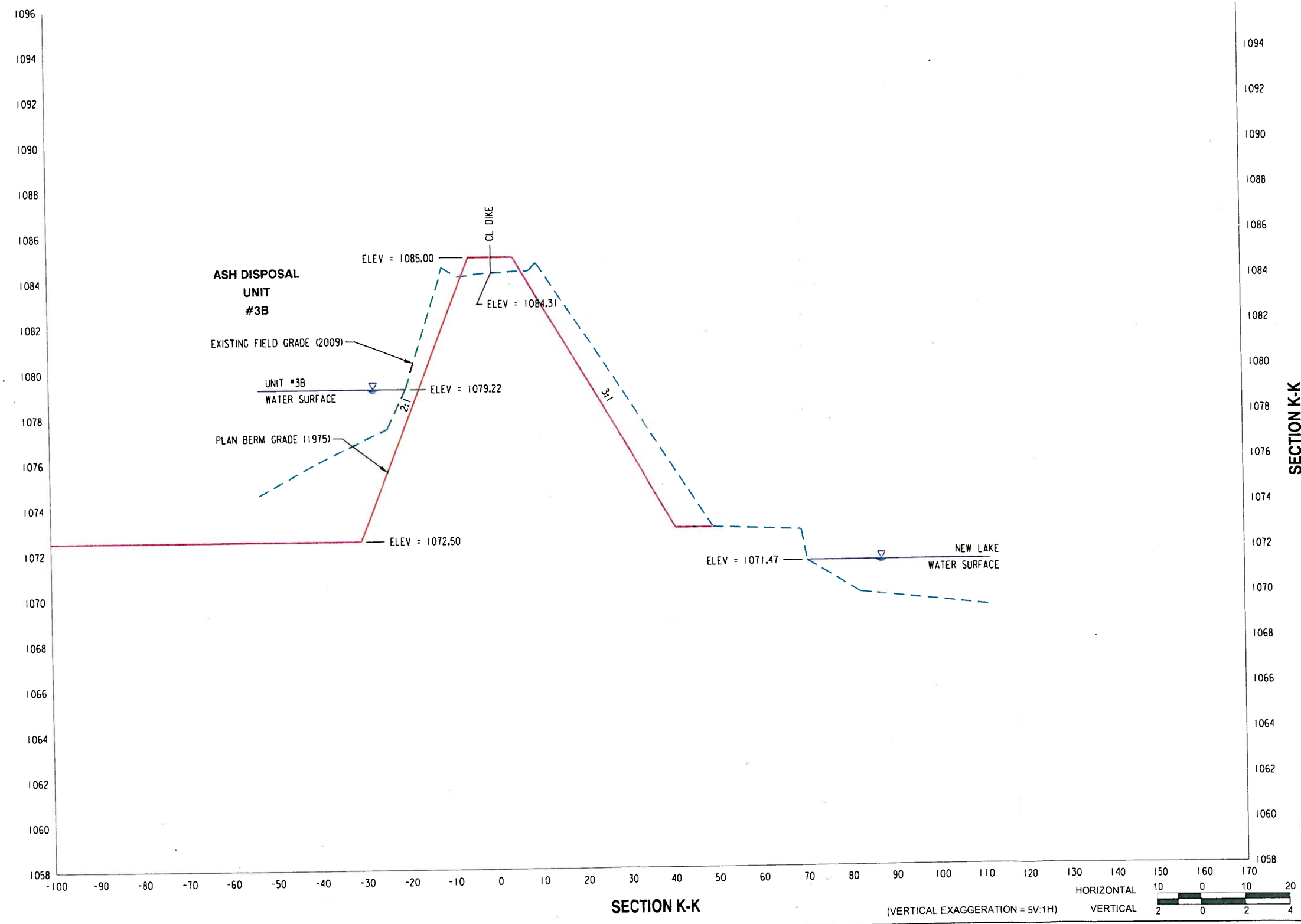

SECTION K-K

(VERTICAL EXAGGERATION = 5V:1H)

CROSS SECTIONS

SECTION K-K

MidAmerican ENERGY

HWS

LINCOLN OFFICE
825 J St. Box 80358
Lincoln, NE 68501
(402) 479-2200
www.hws.com

SCALE AS NOTED

DATE JUNE 2009

JOB NO. 52-69-5092

SHEET NO. 14

F:\Transportation\695092\Design\Base\Cross Sections.dgn
6/12/2009

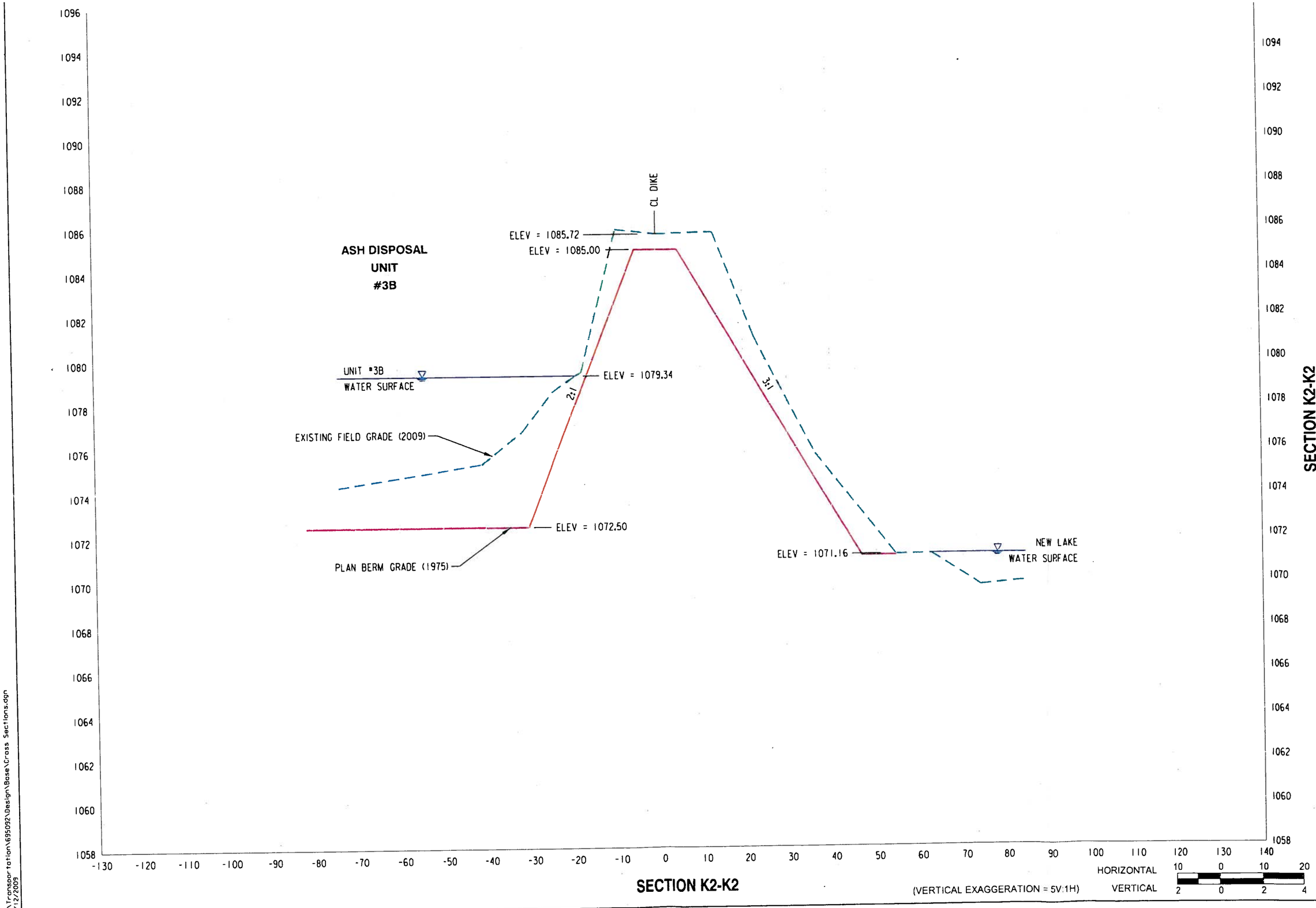

SECTION K2-K2

SECTION K2-K2

CROSS SECTIONS

MidAmerican ENERGY

HWS

LINCOLN OFFICE
825 J St., Box 80358
Lincoln, NE 68501
(402) 479-2200
www.hws.com

SCALE AS NOTED

DATE JUNE 2009

JOB NO. 52-69-5082

SHEET NO. 15

F:\Transportation\695092\Design\Base\Cross Sections.dgn
6/12/2009

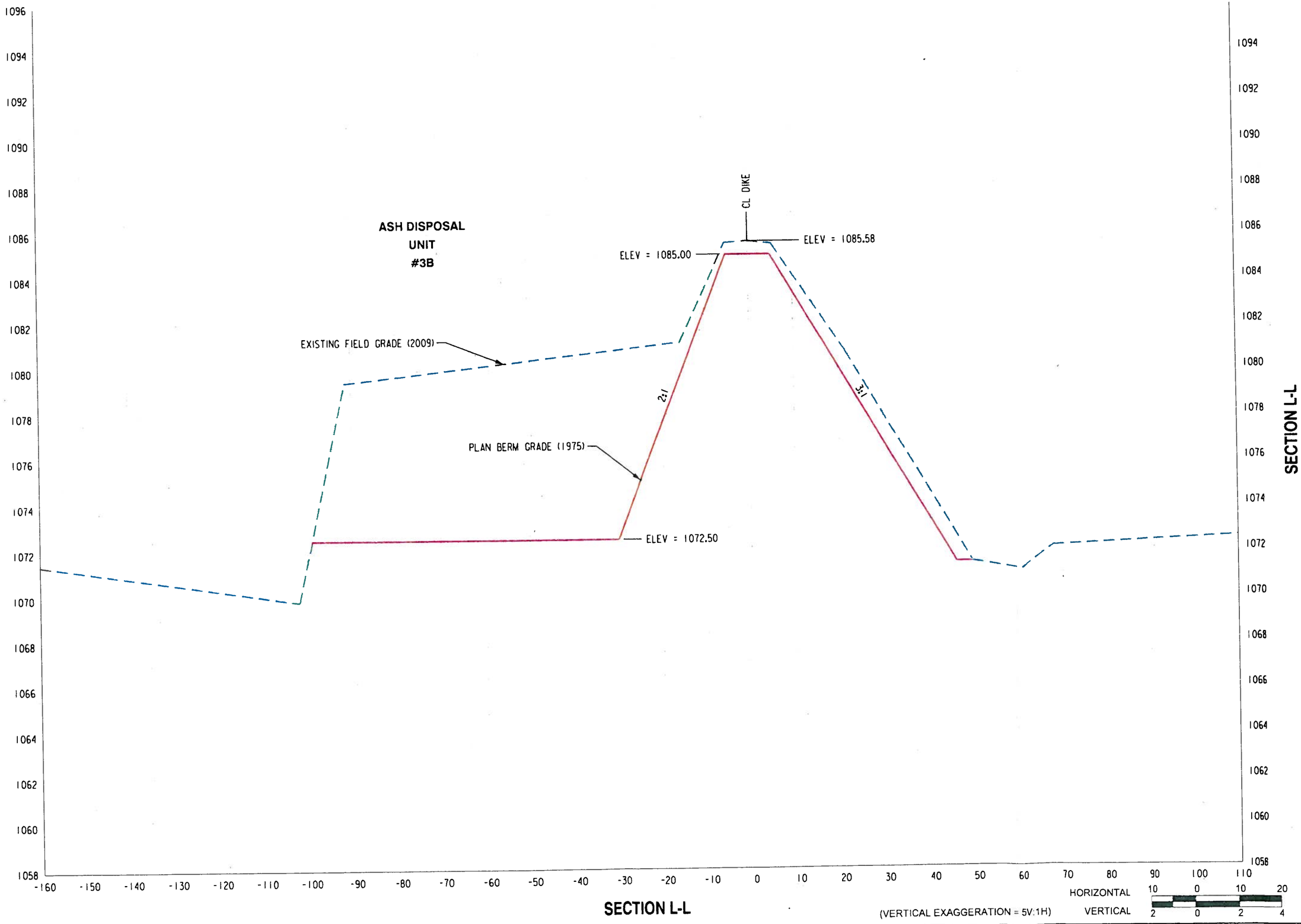

SECTION L-L

CROSS SECTIONS

SECTION L-L

MidAmerican ENERGY

HWS
LINCOLN OFFICE
825 J St., Box 80334
Lincoln, NE 68501
(402) 476-2200
www.hws.com

SCALE AS NOTED
DATE JUNE 2009
JOB NO. 52-69 5092
SHEET NO. 16

F:\Transportation\695092\Design\Base\Cross Sections.dgn
6/12/2009

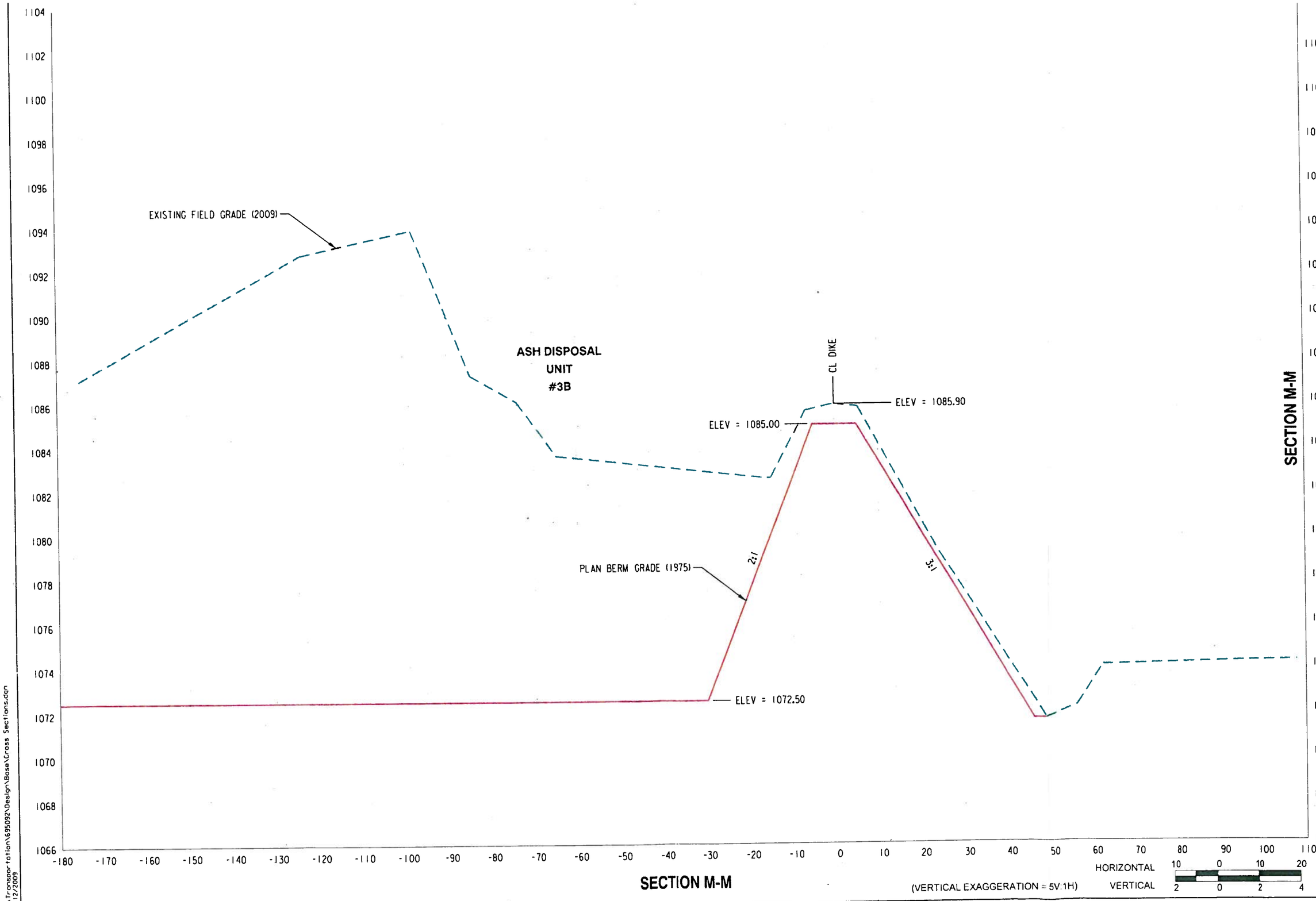

SECTION M-M

SECTION M-M

CROSS SECTIONS

MidAmerican ENERGY

LINCOLN OFFICE
825 J St., Box 80338
Lincoln, NE 68501
(402) 479-2200
www.hws.com

HWS

SCALE AS NOTED

DATE JUNE 2009

JOB NO. 52-69-5082

SHEET NO. 17

F:\Transportation\695092\Design\Base\Cross Sections.dgn
6/12/2009

APPENDIX C.
BORING LOGS & DUTCH FRICTION-CONE PENETRATION DIAGRAMS

HWS
Solutions Through Service
825 J Street
Lincoln, NE 68501
402-479-2200 * Fax 402-479-2276
www.hws.com

PROJECT: Mid American Energy Fly Ash Ponds Containment Assessment

LOCATION: Section A-A, N 3595289.4, E 4146237.4 Port Neal North Powerplant, West of Salix, Iowa

JOB NO.: 52-69-5092
RIG / METHOD: CME 75HT / Straight Auger
CREW: CL&SG

BORING LOG

BORING No.: 1
SHEET 1 of 2
DATE: 4-22-2009

WATER LEVELS ▽ No Groundwater Encountered

ELEV (NAVD88)	DEPTH (feet)	LITHOLOGY DESCRIPTION	SAMPLE	SPT	qu (tsf)	DRY DENSITY (pcf)	MOISTURE (%)	SAND CONTENT (%)	DEPTH (feet)
1086.3	0.0	ML - SILT with Sand; 10-20% fine sand; low plasticity; black; moist; loose. (Fill)							0.0
1085.3	1.0	CL - LEAN CLAY; 10-15% fine sand; medium plasticity; brown; wet; stiff. (Fill)		1 3 6 (9)					
1084.3	2.0	ML - SILT with Sand; 15-25% fine sand; low plasticity; dark brown; wet; medium dense. (Fill)							2.5
1082.3	4.0	ML - SANDY SILT; 35-45% fine sand; low plasticity: dark brown; moist to wet; loose to medium dense. (Fill)	1		0.5	99.0 / 97.6	20 / 21.4		5.0
1080.6	5.7	ML - SANDY SILT; 35-45% fine sand; low plasticity; brown; wet; medium dense. (Fill)						45	7.5
1076.3	10.0	ML - SANDY SILT; 35-45% fine sand; low plasticity: brown; wet, medium dense. (Fill)		6 7 9 (16)					10.0
1074.8	11.5	CL - LEAN CLAY; 0-5% fine sand; medium plasticity; grayish brown; wet; stiff. (Alluvium)							12.5
1073.3	13.0								
1073.1	13.2	ML - SILT with Sand; 20-30% fine sand; low plasticity; grayish brown; wet; loose. (Alluvium)							
		SP - POORLY GRADED SAND; 95-100% fine to medium sand; nonplastic; light brown; moist; loose to medium dense. (Alluvium)	2						
1071.3	15.0	SP - POORLY GRADED SAND: 95-100% fine to medium sand; nonplastic; light grayish brown; wet, medium dense. (Alluvium)							15.0
									17.5
				4 6 7 (13)					
1066.3	20.0								20.0

BORING LOG MID AMERICA ENERGY LOGS.GPJ HWS.GDT 6/9/09

Figure C - 1a

HWS
Solutions Through Service
825 J Street
Lincoln, NE 68501
402-479-2200 * Fax: 402-479-2276
www.hws.com

PROJECT: Mid American Energy Fly Ash Ponds Containment Assessment

LOCATION: Section A-A, N 3595289.4, E 4146237.4 Port Neal North Powerplant, West of Salix, Iowa

JOB NO.: 52-69-5092
RIG / METHOD: CME 75HT / Straight Auger
CREW: CL&SG

BORING LOG

BORING No.: 1
SHEET 2 of 2
DATE: 4-22-2009

WATER LEVELS ▽ No Groundwater Encountered

ELEV (NAVD88)	DEPTH (feet)	LOG	LITHOLOGY DESCRIPTION	SAMPLE	SPT	qu (tsf)	DRY DENSITY (pcf)	MOISTURE (%)	SAND CONTENT (%)	DEPTH (feet)
			SP - POORLY GRADED SAND; 95-100% fine to medium sand; nonplastic; light grayish brown; wet to saturated; medium dense. (Alluvium)							20.0
										22.5
					4 4 6 (10)					
1061.3	25.0		Boring Terminated at: 25.0ft							25.0
										27.5
										30.0
										32.5
										35.0
										37.5
										40.0

Figure C - 1b

HWS
Solutions Through Service
825 J Street
Lincoln, NE 68501
402-479-2200 * Fax: 402-479-2276
www.hws.com

BORING LOG

PROJECT: Mid American Energy Fly Ash Ponds Containment Assessment

LOCATION: Section A-A, N 3595275.8, E 4146253.5 Port Neal North Powerplant, West of Salix, Iowa

JOB NO.: 52-69-5092

RIG / METHOD: CME 75HT / Hollow-Stem

CREW: CL&SG

BORING No.: 1b

SHEET 1 of 2

DATE: 4-22-2009

WATER LEVELS ▽ No Groundwater Encountered

ELEV (NAVD88)	DEPTH (feet)	LOG	LITHOLOGY DESCRIPTION	SAMPLE	SPT	DEPTH (feet)
1091.7	0.0		FLY ASH; gray; moist; medium dense. (Fill)			0.0
						2.5
					3 6 6 (12)	
1086.7	5.0		FLY ASH; gray; wet to saturated; loose. (Fill)			5.0
						7.5
					1 2 4 (6)	
1081.7	10.0		FLY ASH; gray; wet to saturated; loose; with thin layers of solidified fly ash. (Fill)			10.0
						12.5
					4 2 2 (4)	15.0
						17.5
1073.2	18.5		CL - LEAN CLAY; medium plasticity; brown mottled with grayish brown; wet; stiff. (Alluvium)		4 6 11 (17)	
1072.2	19.5		SP-SM - POORLY GRADED SAND with Silt; 90-95% fine to medium sand; low plasticity; light yellowish brown;			20.0

BORING LOG MID AMERICA ENERGY LOGS.GPJ HWS.GDT 6/9/09

Figure C - 2a

HWS
Solutions Through Service
825 J Street
Lincoln, NE 68501
402-479-2200 * Fax: 402-479-2276
www.hws.com

PROJECT: Mid American Energy Fly Ash Ponds Containment Assessment

LOCATION: Section A-A, N 3595275.8, E 4146253.5 Port Neal North Powerplant, West of Salix, Iowa

JOB NO.: 52-69-5092
RIG / METHOD: CME 75HT / Hollow-Stem
CREW: CL&SG

BORING LOG

BORING No.: 1b
SHEET 2 of 2
DATE: 4-22-2009

WATER LEVELS ▽ No Groundwater Encountered

ELEV (NAVD88)	DEPTH (feet)	LOG	LITHOLOGY DESCRIPTION	SAMPLE	SPT	DEPTH (feet)
			wet; medium dense (Alluvium)			20.0
						22.5
1068.2	23.5		SP - POORLY GRADED SAND; 95-100% fine to medium sand; nonplastic; light grayish brown; wet; dense. (Alluvium)		11 13 17 (30)	
1066.7	25.0		Boring Terminated at: 25.0ft			25.0
						27.5
						30.0
						32.5
						35.0
						37.5
						40.0

Figure C - 2b

HWS
Solutions Through Service
825 J Street
Lincoln, NE 68501
402-479-2200 * Fax: 402-479-2276
www.hws.com

PROJECT: Mid American Energy Fly Ash Ponds Containment Assessment

LOCATION: Section B-B, N 3594846.6, E 4145705.3 Port Neal North Powerplant, West of Salix, Iowa

JOB NO.: 52-69-5092
RIG / METHOD: CME 75HT / Straight Auger
CREW: CL&SG

BORING LOG

BORING No.: 2
SHEET 1 of 2
DATE: 4-22-2009

WATER LEVELS ▽ No Groundwater Encountered

ELEV (NAVD88)	DEPTH (feet)	LITHOLOGY DESCRIPTION	SAMPLE	SPT	DRY DENSITY (pcf)	MOISTURE (%)	DEPTH (feet)
1087.3	0.0	FLY ASH; 5-10% fine to coarse hardended fly ash nodulues; grayish brown; moist; medium dense. (Fill)					0.0
							2.5
1083.9	3.4	CL - LEAN CLAY; 5-15% fine sand; medium plasticity; dark grayish brown mottled with grayish brown; wet; medium stiff. (Fill)	3		72.2	35.8	
					89.2	27.1	
1083.1	4.2	ML - SANDY SILT; 30-40% fine to medium sand; low plasticity; dark yellowish brown; wet; medium dense. (Fill)					5.0
1080.3	7.0	ML - SILT with Sand; 10-20% fine sand; low plasticity; dark grayish brown; wet; loose to medium dense. (Fill)	4		93.5	26	7.5
1078.9	8.4	CL - LEAN CLAY; 10-15% fine to medium sand; medium plasticity; brown; wet; medium stiff. (Fill)			101.1	19.8	
1077.8	9.5	CL - LEAN CLAY with Sand; 15-25% fine to medium sand; medium plasticity; brown mottled with gray; wet; stiff. (Fill)		3 3 4 (7)			10.0
1076.3	11.0	CL - LEAN CLAY; 5-15% fine to medium sand; medium plasticity; dark gray; wet; stiff. (Fill)					
1075.3	12.0	CL - LEAN CLAY; 10-15% fine sand; medium plasticity; yellowish brown; wet; medium stiff. (Fill)					12.5
1073.8	13.5	ML - SILT with Sand; 15-25% fine sand; low plasticity; dark yellowish brown; wet; loose to medium dense. (Alluvium)		2 3 4 (7)			
1072.3	15.0						15.0
1071.9	15.4	ML - SANDY SILT; 30-40% fine sand; low plasticity; dark grayish brown; wet to saturated; loose. (Alluvium)	5		93.7	25.9	
1071.0	16.3	SM - SILTY SAND; 55-65% fine sand; low plasticity; dark brown mottled with grayish brown; wet to saturated; loose. (Alluvium)					
		ML - SILT; 5-15% fine sand; low plasticity; olive brown mottled with yellowish red; wet to saturated; medium dense (Alluvium)					17.5
1068.8	18.5	SP - POORLY GRADED SAND; 95-100% fine to medium sand; nonplastic; light grayish brown; wet; medium dense. (Alluvium)		4 6 8 (14)			20.0

BORING LOG MID AMERICA ENERGY LOGS.GPJ HWS.GDT 6/9/09

Figure C - 3a

HWS
Solutions Through Service
825 J Street
Lincoln, NE 68501
402-479-2200 * Fax: 402-479-2276
www.hws.com

PROJECT: Mid American Energy Fly Ash Ponds Containment Assessment

LOCATION: Section B-B, N 3594846.6, E 4145705.3 Port Neal North Powerplant, West of Salix, Iowa

JOB NO.: 52-69-5092
RIG / METHOD: CME 75HT / Straight Auger
CREW: CL&SG

BORING LOG

BORING No.: 2
SHEET 2 of 2
DATE: 4-22-2009

WATER LEVELS ∇ No Groundwater Encountered

ELEV (NAVD88)	DEPTH (feet)	LOG	LITHOLOGY DESCRIPTION	SAMPLE	SPT	DRY DENSITY (pcf)	MOISTURE (%)	DEPTH (feet)
								20.0
								22.5
					6 5 4 (9)			
1062.3	25.0		Boring Terminated at: 25.0ft					25.0
								27.5
								30.0
								32.5
								35.0
								37.5
								40.0

BORING LOG MID AMERICA ENERGY LOGS.GPJ HWS.GDT 6/9/09

Figure C - 3b

HWS
Solutions Through Service
825 J Street
Lincoln, NE 68501
402-479-2200 * Fax: 402-479-2276
www.hws.com

PROJECT: Mid American Energy Fly Ash Ponds Containment Assessment

LOCATION: Section B-B, N 3594817.8, E 4145730.0 Port Neal North Powerplant, West of Salix, Iowa

JOB NO.: 52-69-5092
RIG / METHOD: CME 75HT / Hollow-Stem
CREW: CL&SG

BORING LOG

BORING No.: 3
SHEET 1 of 2
DATE: 4-22-2009

WATER LEVELS ▼ 17.0 IAD ▼ 15.8 on 4-23-2009

ELEV (NAVD88)	DEPTH (feet)	LOG	LITHOLOGY DESCRIPTION	SAMPLE	SPT	DEPTH (feet)
1097.1	0.0		FLY ASH; 10-15% fine to coarse hardened fly ash nodulues; dark gray; moist; loose. (Fill)			0.0
						2.5
					2 2 2 (4)	
1092.1	5.0		FLY ASH; 10-15% fine to coarse hardened fly ash nodulues; dark gray; wet; medium dense. (Fill)			5.0
						7.5
					1 2 15 (17)	
1087.1	10.0		FLY ASH; 10-15% fine to coarse hardened fly ash nodulues; dark gray; wet; medium dense. (Fill)			10.0
						12.5
					12 10 6 (16)	
1082.1	15.0		FLY ASH: 5-10% fine to coarse hardened fly ash nodulues; dark gray; wet to saturated: loose. (Fill)			15.0
						17.5
					5 3 2 (5)	
						20.0

Figure C - 4a

HWS
Solutions Through Service
825 J Street
Lincoln, NE 68501
402-479-2200 * Fax: 402-479-2276
www.hws.com

PROJECT: Mid American Energy Fly Ash Ponds Containment Assessment

LOCATION: Section B-B, N 3594817.8, E 4145730.0 Port Neal North Powerplant, West of Salix, Iowa

JOB NO.: 52-69-5092
RIG / METHOD: CME 75HT / Hollow-Stem
CREW: CL&SG

BORING LOG

BORING No.: 3
SHEET 2 of 2
DATE: 4-22-2009

WATER LEVELS ▼ 17.0 IAD ▼ 15.8 on 4-23-2009

ELEV (NAVD88)	DEPTH (feet)	LOG	LITHOLOGY DESCRIPTION	SAMPLE	SPT	DEPTH (feet)
						20.0
						22.5
1073.6	23.5		ML - SILT with Sand; 15-25% fine sand; low plasticity; dark brown; saturated; very dense. (Alluvium)		6 19 35 (54)	25.0
						27.5
1068.6	28.5		SM - SILTY SAND; 80-90% fine sand; low plasticity; yellowish brown; saturated; medium dense (Alluvium)		4 6 8 (14)	30.0
						32.5
1063.6	33.5		SP-SM - POORLY GRADED SAND with Silt; 85-95% fine to coarse sand; nonplastic; light grayish brown; saturated; medium dense. (Alluvium)		4 9 17 (26)	
1062.1	35.0		Boring Terminated at: 35.0ft			35.0
						37.5
						40.0

BORING LOG MID AMERICA ENERGY LOGS.GPJ HWS.GDT 6/9/09

Figure C - 4b

HWS
Solutions Through Service
825 J Street
Lincoln, NE 68501
402-479-2200 * Fax 402-479-2276
www.hws.com

PROJECT: Mid American Energy Fly Ash Ponds Containment Assessment

LOCATION: Section B-B, N 3594752.8, E 4145711.9 Port Neal North Powerplant, West of Salix, Iowa

JOB NO.: 52-69-5092
RIG / METHOD: CME 75HT / Hollow-Stem & Rock Coring
CREW: CL&SG

BORING LOG

BORING No.: 4
SHEET 1 of 1
DATE: 4-21-2009

WATER LEVELS ▽ No Groundwater Encountered

ELEV (NAVD88)	DEPTH (feet)	LITHOLOGY DESCRIPTION	SAMPLE	DRY DENSITY (pcf)	MOISTURE (%)	DEPTH (feet)
1086.9	0.0	FLY ASH (SOLIDIFIED); dark gray; moderately soft; slightly porous				0.0
1086.8	0.1	FLY ASH (SOLIDIFIED); dark gray with 1/2" to 1" thick seams of light live brown; very soft; fine-grained				
1086.0	0.9	FLY ASH (SOLIDIFIED); light grayish brown with 1 1/2" thick layers of brown; very soft; fine-grained		59.6	55.9	
1085.5	1.4	FLY ASH (SOLIDIFIED); light gray; moderately soft; fine-grained				
1085.4	1.5	FLY ASH (SOLIDIFIED); with 30-40% black cinders; light brownish gray; soft; layered with fine to coarse gravel				
1085.2	1.7	FLY ASH (UNSOLIDIFIED); fine-grained				2.5
1083.6	3.3	FLY ASH (SOLIDIFIED); gray; very soft				
1083.3	3.6	FLY ASH (SOLIDIFIED); light brownish gray with few light olive brown layers; very soft		44.7	88.1	
1082.0	4.9	FLY ASH (UNSOLIDIFIED); grayish brown with abundant fine to coarse sand-sized to fine to coarse gravel-sized black cinders				5.0
						7.5
						10.0
1074.6	12.3	FLY ASH (SOLIDIFIED); grayish brown with few layers of light brownish gray; very soft; fine-grained				12.5
				45.1	88	
						15.0
1070.9	16.0	CL - LEAN CLAY; 0-5% fine sand; medium plasticity; very dark grayish brown; wet; stiff (Alluvial Clay)		38.2	115.8	
1069.6	17.3	Boring Terminated at: 17.3ft				17.5
						20.0

BORING LOG MID AMERICA ENERGY LOGS.GPJ HWS.GDT 6/9/09

Figure C - 5

HWS
Solutions Through Service
825 J Street
Lincoln, NE 68501
402-479-2200 * Fax 402-479-2276
www.hws.com

PROJECT: Mid American Energy Fly Ash Ponds Containment Assessment

LOCATION: Section M-M, N 3595126.7, E 4146829.1 Port Neal North Powerplant, West of Salix, Iowa

JOB NO.: 52-69-5092
RIG / METHOD: Hand Auger / Hand Auger
CREW: CL&SG

BORING LOG

BORING No.: 5b
SHEET 1 of 1
DATE: 4-23-2009

WATER LEVELS ▽ No Groundwater Encountered

ELEV (NAVD88)	DEPTH (feet)	LOG	LITHOLOGY DESCRIPTION	SAMPLE	DRY DENSITY (pcf)	MOISTURE (%)	DEPTH (feet)
1075.1	0.0		CL - LEAN CLAY; 5-15% fine sand; medium plasticity; very dark brown; wet; stiff. (Topsoil)				0.0
1074.6	0.5		ML - SILT; 10-15% fine sand; low plasticity; grayish brown mottled with yellowish brown; moist to wet; loose to medium dense. (Alluvium)	6	89.7	17.9	
1072.9	2.2		SM - SILTY SAND; 60-70% fine sand; low plasticity; light olive brown; wet; medium dense. (Alluvium)				2.5
1071.6	3.5		SM - SILTY SAND; 70-80% fine sand; low plasticity; light olive brown; wet; medium dense. (Alluvium)				
1070.1	5.0		Boring Terminated at: 5.0ft				5.0
							7.5
							10.0
							12.5
							15.0
							17.5
							20.0

Figure C - 6

HWS
Solutions Through Service
825 J Street
Lincoln, NE 68501
402-479-2200 * Fax 402-479-2276
www.hws.com

PROJECT: Mid American Energy Fly Ash Ponds Containment Assessment

LOCATION: Section L-L, N 3594548.5, E 4147351.3 Port Neal North Powerplant, West of Salix, Iowa

JOB NO.: 52-69-5092
RIG / METHOD: Hand Auger / Hand Auger
CREW: CL&SG

BORING LOG

BORING No.: 9
SHEET 1 of 1
DATE: 4-23-2009

WATER LEVELS ∇ No Groundwater Encountered

ELEV (NAVD88)	DEPTH (feet)	LITHOLOGY DESCRIPTION	SAMPLE	qu (tsf)	DRY DENSITY (pcf)	MOISTURE (%)
1080.8	0.0	CL - LEAN CLAY; 10-15% fine to medium sand; medium plasticity; brown; wet; medium stiff. (Fill)				
1080.3	0.5	CL - LEAN CLAY; 5-15% fine sand; medium plasticity; dark grayish brown; wet; medium stiff. (Fill)	7	0.75*	84.6	29.2
1080.0	0.8	CH - FAT CLAY; 0-5% fine sand; high plasticity; grayish brown; wet; stiff. (Fill)		1.0*	94.6	26.6
1079.5	1.3	ML - SILT; 10-20% fine sand; low plasticity; dark grayish brown mottled with yellowish red; wet; medium dense. (Fill)				
1079.0	1.8	CH - FAT CLAY; high plasticity; grayish brown; wet; very stiff. (Fill)				
1078.7	2.1	CL/CH - LEAN TO FAT CLAY; medium to high plasticity; dark olive brown; wet; stiff. (Fill)				
1077.3	3.5	CH - FAT CLAY; high plasticity; dark grayish brown; wet; stiff. (Alluvium)				
1077.0	3.8	SM - SILTY SAND; 75-85% fine to medium sand; low plasticity; dark grayish brown; moist; medium dense. (Alluvium)	8	1.0*	93.4	28.9
1076.8	4.0	CH - FAT CLAY; high plasticity; grayish brown slightly mottled with yellowish red; wet; medium dense; stiff. (Alluvium)				
1075.6	5.2	CL - LEAN CLAY; 0-5% fine sand; medium plasticity; brown; wet; stiff. (Alluvium)				
1073.8	7.0	Boring Terminated at: 7.0ft				

DEPTH (feet): 0.0, 2.5, 5.0, 7.5, 10.0, 12.5, 15.0, 17.5, 20.0

* Unconfined compressive strength was estimated using a calibrated hand penetrometer

Figure C - 7

HWS
Solutions Through Service
825 J Street
Lincoln, NE 68501
402-479-2200 * Fax: 402-479-2276
www.hws.com

PROJECT: Mid American Energy Fly Ash Ponds Containment Assessment

LOCATION: Section K2-K2, N 3594186.1, E 4147431.2 Port Neal North Powerplant, West of Salix, Iowa

JOB NO.: 52-69-5092
RIG / METHOD: CME 75HT / Straight Auger
CREW: CL&SG

BORING LOG

BORING No.: 9a
SHEET 1 of 2
DATE: 4-22-2009

WATER LEVELS ▼ 22.4 IAD ▼ 20.7 on 4-23-2009

ELEV (NAVD88)	DEPTH (feet)	LITHOLOGY DESCRIPTION	SAMPLE	SPT	qu (tsf)	DRY DENSITY (pcf)	MOISTURE (%)	SAND CONTENT (%)	DEPTH (feet)
1085.7	0.0	FLY ASH; gray; moist; loose. (Fill)							0.0
1085.3	0.4	CL - LEAN CLAY; 5-15% fine to medium sand; medium plasticity; brown; wet; stiff. (Fill)							2.5
1082.7	3.0	CL - LEAN CLAY; 5-15% fine sand; medium plasticity; dark grayish brown slightly mottled with dark reddish brown; wet; very stiff. (Fill)	9		1.0	100.3	21.4		
1081.6	4.1	CH - FAT CLAY; 0-5% fine sand; high plasticity; dark grayish brown; wet; very stiff. (Fill)			2.0*	103.3	19.3		
1081.1	4.6	CL - LEAN CLAY; 5-10% fine to medium sand; medium plasticity; brown mottled with pale brown; wet; stiff. (Fill)							5.0
1079.7	6.0	CH - SANDY FAT CLAY; 40-45% fine to coarse sand; high plasticity; dark grayish brown slightly mottled with reddish brown; wet; very stiff; with silt seams. (Fill)	10			109.1	19.2	42	
1078.9	6.8	SC - CLAYEY SAND; 50-55% fine sand; medium plasticity; dark gray mottled with dark grayish brown; wet; loose to medium dense. (Fill)						50	
1078.5	7.2	CL - LEAN CLAY; 5-15% fine sand; medium plasticity; brown mottled with pale brown; wet; medium stiff to stiff. (Fill)							7.5
1077.2	8.5	CL - LEAN CLAY; 10-15% fine to coarse sand; medium plasticity; grayish brown mottled with very dark grayish brown; wet; stiff. (Fill)		4 5 6 (11)					
1075.7	10.0	CH - FAT CLAY; high plasticity; dark brown; wet; very stiff. (Fill)							10.0
									12.5
1072.2	13.5	CH - FAT CLAY; high plasticity; dark brown mottled with gray; wet; very stiff. (Fill)		4 4 6 (10)					
1070.7	15.0	CH - FAT CLAY; high plasticity; olive; wet; medium stiff. (Alluvium)							15.0
1069.7	16.0	CH - FAT CLAY; high plasticity; grayish brown mottled with gray and dark gray; wet; stiff. (Alluvium)			0.25*				
1069.1	16.6	CH - FAT CLAY; high plasticity; dark grayish brown slightly mottled with grayish brown; wet; stiff. (Alluvium)	11		1.0*	78.9	40.3		
1067.9	17.8	CH - FAT CLAY; high plasticity; gray; wet; medium stiff. (Alluvium)				76.6	44		17.5
1066.2	19.5	SP - POORLY GRADED SAND; 95-100% fine sand; low plasticity; dark		5 9 10 (19)					
1065.7	20.0								20.0

* Unconfined compressive strength was estimated using a calibrated hand penetrometer.

Figure C - 8a

HWS
Solutions Through Service
825 J Street
Lincoln, NE 68501
402-479-2200 * Fax: 402-479-2276
www.hws.com

PROJECT: Mid American Energy Fly Ash Ponds Containment Assessment

LOCATION: Section K2-K2, N 3594186.1, E 4147431.2 Port Neal North Powerplant, West of Salix, Iowa

JOB NO.: 52-69-5092
RIG / METHOD: CME 75HT / Straight Auger
CREW: CL&SG

BORING LOG

BORING No.: 9a
SHEET 2 of 2
DATE: 4-22-2009

WATER LEVELS ▼ 22.4 IAD ▼ 20.7 on 4-23-2009

ELEV (NAVD88)	DEPTH (feet)	LOG	LITHOLOGY DESCRIPTION	SAMPLE	SPT	qu (tsf)	DRY DENSITY (pcf)	MOISTURE (%)	DEPTH (feet)
			brown; wet; medium dense. (Alluvium)						20.0
			SP - POORLY GRADED SAND; 95-100% fine to coarse sand; low plasticity; grayish brown; saturated; medium dense. (Alluvium)						
									22.5
					3 4 6 (10)				
1060.7	25.0		Boring Terminated at: 25.0ft						25.0
									27.5
									30.0
									32.5
									35.0
									37.5
									40.0

* Unconfined compressive strength was estimated using a calibrated hand penetrometer

HWS
Solutions Through Service
825 J Street
Lincoln, NE 68501
402-479-2200 * Fax: 402-479-2276
www.hws.com

PROJECT: Mid American Energy Fly Ash Ponds Containment Assessment

LOCATION: Section K2-K2, N 3594210.6, E 4147477.9 Port Neal North Powerplant, West of Salix, Iowa

JOB NO.: 52-69-5092
RIG / METHOD: Hand Auger / Hand Auger
CREW: CL&SG

BORING LOG

BORING No.: 9b
SHEET 1 of 1
DATE: 4-23-2009

WATER LEVELS ▼ 1.5 IAD

ELEV (NAVD88)	DEPTH (feet)	LOG	LITHOLOGY DESCRIPTION	SAMPLE	qu (tsf)	DRY DENSITY (pcf)	MOISTURE (%)	DEPTH (feet)
1071.6	0.0		OL - ORGANIC CLAY; medium plasticity; black; wet; medium stiff. (Topsoil)					0.0
1071.1	0.5		CL - LEAN CLAY; medium plasticity; grayish brown; wet to saturated; medium stiff. (Alluvium)	12	2.75*	91.3	29.5	
1070.7	0.9		CL - LEAN CLAY; medium plasticity; grayish brown; wet to saturated; stiff. (Alluvium)			104.9	24.8	
1070.1	1.5		CL - LEAN CLAY; medium plasticity; dark gray slightly mottled with brown; saturated; medium stiff to stiff. (Alluvium)					2.5
1068.1	3.5		CH - FAT CLAY; high plasticity; olive brown mottled with olive gray; saturated; stiff. (Alluvium)	13	0.75*	74.1	46.1	
1067.1	4.5		CH - FAT CLAY; high plasticity; gray mottled with brown; saturated; medium stiff. (Alluvium)					5.0
1065.1	6.5		SP-SM - POORLY GRADED SAND with Silt; 90-95% fine sand; nonplastic; light olive brown; saturated; medium dense. (Alluvium)					7.5
1062.6	9.0		Boring Terminated at: 9.0ft					10.0
								12.5
								15.0
								17.5
								20.0

* Unconfined compressive strength was estimated using a calibrated hand penetrometer.

Figure C - 9

HWS
Solutions Through Service
825 J Street
Lincoln, NE 68501
402-479-2200 * Fax: 402-479-2276
www.hws.com

PROJECT: Mid American Energy Fly Ash Ponds Containment Assessment

LOCATION: Section H2-H2, N 3593557.2, E 4146975.6
Port Neal North Powerplant, West of Salix, Iowa

JOB NO.: 52-69-5092
RIG / METHOD: CME 75HT / Straight Auger
CREW: CL&SG

BORING LOG

BORING No.: 12
SHEET 1 of 2
DATE: 4-21-2009

WATER LEVELS ▼ 9.5 IAD ▼ 6.0 on 4-22-2009

low should be 1081

ELEV (NAVD88)	DEPTH (feet)	LOG	LITHOLOGY DESCRIPTION	SAMPLE	SPT	qu (tsf)	DRY DENSITY (pcf)	MOISTURE (%)	SAND CONTENT (%)	DEPTH (feet)
1082.8	0.0		FLY ASH; 10-15% fine to coarse gravel; light yellow mottled with dark brown; moist; very dense. (Fill)							0.0
1081.6	1.2		CL - LEAN CLAY; 0-5% fine sand; medium plasticity; dark grayish brown slightly mottled with yellowish red; wet; stiff. (Fill)							2.5
1079.3	3.5		CL - LEAN CLAY; 0-5% fine sand; medium plasticity; dark grayish brown slightly mottled with yellowish red; wet; medium stiff. (Fill)		2 2 3 (5)					5.0
				14		2.0*	85.9	29.7		
1076.8	6.0		CL - LEAN CLAY; 0-5% fine sand; medium plasticity; dark grayish brown slightly mottled with yellowish red; saturated; medium stiff. (Fill)			0.5* 0.7	84.3	32.7		7.5
1074.3	8.5		CL - LEAN CLAY; 0-5% fine sand; medium plasticity; dark brown; saturated; medium stiff. (Fill)		2 2 2 (4)					10.0
1071.8	11.0		CL - LEAN CLAY; medium plasticity; dark gray mottled with gray; saturated; medium stiff. (Fill)	15		0.75*	86.3	32.2		
						0.5* 0.8	84.3	33.4		12.5
1069.9	12.9		CL - LEAN CLAY; medium plasticity; dark gray mottled with gray; saturated; medium stiff. (Fill)							
1069.3	13.5		CL - LEAN CLAY; 5-10% fine to coarse sand; medium plasticity; dark gray mottled with gray; saturated; medium stiff. (Fill)		1 1 2 (3)					
1067.8	15.0		CL - LEAN CLAY with Sand; 20-30% fine to coarse sand; medium plasticity; olive brown mottled with grayish brown; saturated; medium stiff. (Alluvium)							15.0
1064.8	18.0		CH - FAT CLAY; 10-15% fine sand; high plasticity; brown; saturated; stiff. (Alluvium)							17.5
1062.8	20.0									20.0

pos sent of settlement

BORING LOG MID AMERICA ENERGY LOGS.GPJ HWS.GDT 6/9/09

* Unconfined compressive strength was estimated using a calibrated hand penetrometer.

Figure C - 10a

HWS
Solutions Through Service
825 J Street
Lincoln, NE 68501
402-479-2200 * Fax: 402-479-2276
www.hws.com

PROJECT: Mid American Energy Fly Ash Ponds Containment Assessment

LOCATION: Section H2-H2, N 3593557.2, E 4146975.6 Port Neal North Powerplant, West of Salix, Iowa

JOB NO.: 52-69-5092
RIG / METHOD: CME 75HT / Straight Auger
CREW: CL&SG

BORING LOG

BORING No.: 12
SHEET 2 of 2
DATE: 4-21-2009

WATER LEVELS ▼ 9.5 IAD ▼ 6.0 on 4-22-2009

ELEV (NAVD88)	DEPTH (feet)	LOG	LITHOLOGY DESCRIPTION	SAMPLE	SPT	qu (tsf)	DRY DENSITY (pcf)	MOISTURE (%)	SAND CONTENT (%)	DEPTH (feet)
1062.3	20.5		CH - FAT CLAY; 10-15% fine sand; high plasticity; brown; saturated; stiff. (Alluvium)							20.0
			SC - CLAYEY SAND; 65-75% fine sand; medium plasticity; brown; saturated; loose. (Alluvium)		0 1 3 (4)				71.0	
1060.8	22.0		CH - FAT CLAY; high plasticity; brown; saturated; stiff. (Alluvium)							22.5
1059.3	23.5		CH - FAT CLAY; high plasticity; brown; saturated; stiff; with sand seams. (Alluvium)		2 3 5 (8)					
1057.8	25.0		Boring Terminated at: 25.0ft							25.0
										27.5
										30.0
										32.5
										35.0
										37.5
										40.0

BORING LOG MID AMERICA ENERGY LOGS.GPJ HWS.GDT 6/9/09

* Unconfined compressive strength was estimated using a calibrated hand penetrometer

Figure C - 10b

HWS
Solutions Through Service
825 J Street
Lincoln, NE 68501
402-479-2200 * Fax: 402-479-2276
www.hws.com

PROJECT: Mid American Energy Fly Ash Ponds Containment Assessment

LOCATION: Section H2-H2, N 3593534.2, E 4146979.3 Port Neal North Powerplant, West of Salix, Iowa

JOB NO.: 52-69-5092
RIG / METHOD: Hand Auger / Hand Auger
CREW: CL&SG

BORING LOG

BORING No.: 12b
SHEET 1 of 1
DATE: 4-23-2009

WATER LEVELS ▼ 1.0 IAD

ELEV (NAVD88)	DEPTH (feet)	LOG	LITHOLOGY DESCRIPTION	SAMPLE	qu (tsf)	DRY DENSITY (pcf)	MOISTURE (%)	DEPTH (feet)
1075.6	0.0		CL - LEAN CLAY; 0-5% fine sand; medium plasticity; brown; wet; soft to medium stiff. (Fill)					0.0
1075.1	0.5		CL - LEAN CLAY; medium plasticity; dark grayish brown mottled with reddish brown; wet; soft. (Fill)			80.1	39.2	
1074.6	1.0	▼		16	0.25*			
1074.2	1.4		CL - LEAN CLAY; medium plasticity; dark grayish brown mottled with reddish brown; saturated; soft. (Fill)		0.5*	87.4	33.9	
1073.8	1.8		CL - LEAN CLAY; medium plasticity; dark grayish brown mottled with olive brown; saturated; medium stiff. (Fill)					2.5
			CL - LEAN CLAY; medium plasticity; very dark grayish brown; saturated; soft to medium stiff. (Fill)					
1072.1	3.5		CL - LEAN CLAY; medium plasticity; dark gray; saturated; very soft. (Fill)		0.0*	81.9	36.6	
1071.2	4.4			17	1.5*			
1070.7	4.9		CH - FAT CLAY; high plasticity; dark grayish brown mottled with grayish brown; saturated; stiff. (Fill)			84.1	37.6	5.0
			CL - LEAN CLAY; medium plasticity; very dark grayish brown; saturated; stiff. (Alluvium)					
1069.6	6.0		CL - LEAN CLAY; medium plasticity; brown; saturated; stiff. (Alluvium)					7.5
1067.6	8.0		Boring Terminated at: 8.0ft					10.0
								12.5
								15.0
								17.5
								20.0

Low Strength

possibly fill placed in water or New Lake

BORING LOG MID AMERICA ENERGY LOGS.GPJ HWS.GDT 6/9/09

* Unconfined compressive strength was estimated using a calibrated hand penetrometer.

HWS
Solutions Through Service
825 J Street
Lincoln, NE 68501
402-479-2200 * Fax 402-479-2276
www.hws.com

PROJECT: Mid American Energy Fly Ash Ponds Containment Assessment

LOCATION: Section E-E, N 3592699.3, E 4143971.6 Port Neal North Powerplant, West of Salix, Iowa

JOB NO.: 52-69-5092
RIG / METHOD: CME 75HT / Straight Auger
CREW: CL&SG

BORING LOG

BORING No.: 14
SHEET 1 of 2
DATE: 4-22-2009

WATER LEVELS ▽ No Groundwater Encountered

ELEV (NAVD88)	DEPTH (feet)	LITHOLOGY DESCRIPTION	SAMPLE	SPT	qu (tsf)	DRY DENSITY (pcf)	MOISTURE (%)	SAND CONTENT (%)
1085.8	0.0	BOTTOM ASH WITH FLY ASH; 10-15% fine to coarse sand; black; moist; loose. (Fill)						
1081.8	4.0	CL - LEAN CLAY with Sand; 20-30% fine to medium sand; medium plasticity; grayish brown with dark gray; wet; very stiff. (Fill)			3.5*	104.5	17.6	25.0
1081.3	4.5	SC - CLAYEY SAND; 55-65% fine to medium sand; medium plasticity; dark grayish brown with dark gray; wet; medium dense. (Fill)	18					
1080.9	4.9	SM - SILTY SAND; 65-75% fine to medium sand; low plasticity; dark grayish brown with reddish brown; wet; loose to medium dense; with zones of fat clay and clayey sand. (Fill)						71.0
1079.9	5.9	SM - SILTY SAND; 65-75% fine to coarse sand; low plasticity; yellowish brown; wet; medium dense. (Fill)						74.0
1077.3	8.5	CL - SANDY LEAN CLAY; 30-40% fine to coarse sand; medium plasticity; gray; wet; stiff. (Fill)						
1076.3	9.5	SM - SILTY SAND; 80-90% fine to medium sand; low plasticity; gray with dark gray and strong brown; moist; loose to medium dense; zones of fat clay. (Fill)	19		1.75*	116.0	13.5	68.0
1075.9	9.9	SC - CLAYEY SAND; 60-70% fine to medium sand; medium plasticity; dark grayish brown with black; wet; medium dense; zones of fat clay. (Fill)			3.75*			
1075.3	10.5	CH - FAT CLAY; high plasticity; gray slightly mottled with black; wet; stiff. (Alluvium)						
1072.8	13.0	CH - FAT CLAY; 0-5% fine sand; high plasticity; dark gray with grayish brown and reddish brown; wet; very stiff. (Alluvium)	20		3.75*	92.5	25.2	
1071.4	14.4	ML - SANDY SILT; 30-40% fine to medium sand; low plasticity; dark brown with yellowish brown; moist; medium dense. (Alluvium)			2.5*			
1071.0	14.8	SM - SILTY SAND; 65-75% fine sand; low plasticity; light yellowish brown mottled with yellowish red; wet; medium dense. (Alluvium)			3.5*			
1067.3	18.5	SP - POORLY GRADED SAND; 95-100% fine sand; nonplastic; light yellowish brown; moist; medium dense. (Alluvium)		3 3 5 (8)				
1065.8	20.0							

DEPTH (feet): 0.0, 2.5, 5.0, 7.5, 10.0, 12.5, 15.0, 17.5, 20.0

* Unconfined compressive strength was estimated using a calibrated hand penetrometer.

HWS
Solutions Through Service
825 J Street
Lincoln, NE 68501
402-479-2200 * Fax: 402-479-2276
www.hws.com

PROJECT: Mid American Energy Fly Ash Ponds Containment Assessment

LOCATION: Section E-E, N 3592699.3, E 4143971.6 Port Neal North Powerplant, West of Salix, Iowa

JOB NO.: 52-69-5092
RIG / METHOD: CME 75HT / Straight Auger
CREW: CL&SG

BORING LOG

BORING No.: 14
SHEET 2 of 2
DATE: 4-22-2009

WATER LEVELS ▽ No Groundwater Encountered

ELEV (NAVD88)	DEPTH (feet)	LOG	LITHOLOGY DESCRIPTION	SAMPLE	SPT	qu (tsf)	DRY DENSITY (pcf)	MOISTURE (%)	SAND CONTENT (%)	DEPTH (feet)
			SP-SM - POORLY GRADED SAND with Silt; 90-95% fine sand; nonplastic; light yellowish brown; moist; loose to medium dense. (Alluvium)							20.0
										22.5
					2 2 3 (5)					
1060.8	25.0		Boring Terminated at: 25.0ft							25.0
										27.5
										30.0
										32.5
										35.0
										37.5
										40.0

* Unconfined compressive strength was estimated using a calibrated hand penetrometer.

Figure C - 12b

HWS
Solutions Through Service
825 J Street
Lincoln, NE 68501
402-479-2200 * Fax: 402-479-2276
www.hws.com

PROJECT: Mid American Energy Fly Ash Ponds Containment Assessment

LOCATION: Section E-E
Port Neal North Powerplant, West of Salix, Iowa

JOB NO.: 52-69-5092
RIG / METHOD: CME 75HT / Straight Auger
CREW: CL&SG

BORING LOG

BORING No.: 14E
SHEET 1 of 1
DATE: 4-22-2009

WATER LEVELS ▽ No Groundwater Encountered

ELEV (NAVD88)	DEPTH (feet)	LOG	LITHOLOGY DESCRIPTION	SAMPLE	DEPTH (feet)
1085.8	0.0		BOTTOM ASH WITH FLY ASH; 10-15% fine to coarse sand; black; moist; loose. (Fill)		0.0
					2.5
1081.3	4.5		SC - CLAYEY SAND; 60-70% fine to coarse sand; medium plasticity; yellowish brown; wet; medium dense. (Fill)		5.0
1079.8	6.0		SC - CLAYEY SAND; 60-70% fine to coarse sand; medium plasticity; yellowish brown; wet; medium dense; with lean clay and poorly graded sand seams. (Fill)		7.5
1075.8	10.0		Boring Terminated at: 10.0ft		10.0
					12.5
					15.0
					17.5
					20.0

BORING LOG MID AMERICA ENERGY LOGS.GPJ HWS.GDT 6/9/09

Figure C - 13

HWS
Solutions Through Service
825 J Street
Lincoln, NE 68501
402-479-2200 * Fax: 402-479-2276
www.hws.com

PROJECT: Mid American Energy Fly Ash Ponds Containment Assessment

LOCATION: Section E-E
Port Neal North Powerplant, West of Salix, Iowa

JOB NO.: 52-69-5092
RIG / METHOD: CME 75HT / Straight Auger
CREW: CL&SG

BORING LOG

BORING No.: 14W
SHEET 1 of 1
DATE: 4-22-2009

WATER LEVELS ▽ No Groundwater Encountered

ELEV (NAVD88)	DEPTH (feet)	LOG	LITHOLOGY DESCRIPTION	SAMPLE	DEPTH (feet)
1085.8	0.0		BOTTOM ASH WITH FLY ASH; 10-15% fine to coarse sand; black; moist; loose. (Fill)		0.0
1084.3	1.5		FLY ASH; 10-15% fine to coarse sand; moist; loose. (Fill)		2.5
1080.3	5.5		CL - LEAN CLAY; medium plasticity; brown; wet; medium stiff. (Fill)		5.0
1078.3	7.5		SP-SM - POORLY GRADED SAND with Silt; 90-95% fine to medium sand, nonplastic; light yellowish brown; wet; medium dense. (Fill)		7.5
1075.8	10.0		Boring Terminated at: 10.0ft		10.0
					12.5
					15.0
					17.5
					20.0

BORING LOG MID AMERICA ENERGY LOGS.GPJ HWS.GDT 6/9/09

HWS
Solutions Through Service
825 J Street
Lincoln, NE 68501
402-479-2200 * Fax: 402-479-2276
www.hws.com

PROJECT: Mid American Energy Fly Ash Ponds Containment Assessment

LOCATION: Section E-E
Port Neal North Powerplant, West of Salix, Iowa

JOB NO.: 52-69-5092
RIG / METHOD: Hand Auger / Hand Auger
CREW: CL&SG

BORING LOG

BORING No.: 14c
SHEET 1 of 1
DATE: 4-23-2009

WATER LEVELS ∇ No Groundwater Encountered

ELEV (NAVD88)	DEPTH (feet)	LOG	LITHOLOGY DESCRIPTION	SAMPLE	qu (tsf)	DRY DENSITY (pcf)	MOISTURE (%)	DEPTH (feet)
1075.6	0.0		CL - LEAN CLAY; medium plasticity; very dark grayish brown; wet; medium stiff. (Fill)					0.0
1075.1	0.5		CL - LEAN CLAY; 0-5% fine sand; medium plasticity; dark grayish brown; wet; stiff; friable. (Alluvium)					
1074.7	0.9		CH - FAT CLAY; 0-5% fine sand; high plasticity; dark grayish brown; wet; very stiff. (Alluvium)	21	3.25*	99.5	24.2	
1073.9	1.7		SM - SILTY SAND; 65-75% fine sand; low plasticity; yellowish brown; wet; loose to medium dense; interbedded with lean clay seams. (Alluvium)		2.0*			
1073.7	1.9		CH - FAT CLAY; high plasticity; dark olive brown; wet; stiff. (Alluvium)					2.5
1072.1	3.5		CH - FAT CLAY; high plasticity; dark grayish brown slightly mottled with yellowish red; wet; stiff. (Alluvium)	22		81.8	30.9	
1071.3	4.3		CH - FAT CLAY; high plasticity; dark grayish brown slightly mottled with yellowish red; wet; very stiff. (Alluvium)			94.6	26.3	
1070.8	4.8		Boring Terminated at: 4.8ft					5.0
								7.5
								10.0
								12.5
								15.0
								17.5
								20.0

* Unconfined compressive strength was estimated using a calibrated hand penetrometer

Figure C - 15

HWS
Solutions Through Service
825 J Street
Lincoln, NE 68501
402-479-2200 * Fax: 402-479-2276
www.hws.com

PROJECT: Mid American Energy Fly Ash Ponds Containment Assessment

LOCATION: Section G-G, N 3593138.5, E 4145056.6 Port Neal North Powerplant, West of Salix, Iowa

JOB NO.: 52-69-5092
RIG / METHOD: CME 75HT / Straight Auger
CREW: CL&SG

BORING LOG

BORING No.: 15
SHEET 1 of 2
DATE: 4-23-2009

WATER LEVELS ∇ No Groundwater Encountered

ELEV (NAVD88)	DEPTH (feet)	LITHOLOGY DESCRIPTION	SAMPLE	SPT	qu (tsf)	DRY DENSITY (pcf)	MOISTURE (%)	DEPTH (feet)
1087.7	0.0	FLY ASH; 10-15% fine to coarse sand; 5-10% fine to coarse gravel; yellowish brown; moist; loose. (Fill)						0.0
1087.2	0.5	FLY ASH; 10-15% fine to coarse sand; 5-10% fine to coarse gravel; yellowish brown; moist; medium dense. (Fill)		14 7 3 (10)				
1086.3	1.4	FLY ASH; gray; wet; medium dense. (Fill)						
1085.7	2.0	FLY ASH; gray; wet to saturated; medium dense. (Fill)						2.5
1084.2	3.5	FLY ASH with seams of bottom ash; gray with black; wet to saturated; loose. (Fill)		1 1 1 (2)				
1082.7	5.0	FLY ASH with seams of bottom ash; gray with black; wet; loose. (Fill)	23			59.5	58.1	5.0
1081.0	6.7	FLY ASH with seams of bottom ash; gray with black; wet; loose to medium dense. (Fill)		1 0 1 (1) 1 10 14 (24) 9 4 4 (8)				7.5 10.0 12.5
1074.9	12.8	CL/CH - LEAN TO FAT CLAY; medium to high plasticity; dark gray; wet; medium stiff. (Alluvium)						
1073.7	14.0	CH - FAT CLAY; high plasticity; dark gray mottled with black and greenish gray; wet; stiff. (Alluvium)	24		1.5* 1.75*	84.2	34.7	15.0
1072.4	15.3	CH - FAT CLAY; 5-15% fine sand; high plasticity; dark gray slightly mottled with black and yellowish red; wet; stiff. (Alluvium)	25		1.5*	97.9	26.2	17.5
1069.2	18.5	SP-SM - POORLY GRADED SAND with Silt; 90-95% fine to medium sand; nonplastic; yellowish brown; wet; medium dense. (Alluvium)		3 4 7 (11)				
1067.7	20.0							20.0

* Unconfined compressive strength was estimated using a calibrated hand penetrometer

Figure C - 16a

HWS
Solutions Through Service
825 J Street
Lincoln, NE 68501
402-479-2200 * Fax: 402-479-2276
www.hws.com

PROJECT: Mid American Energy Fly Ash Ponds Containment Assessment

LOCATION: Section G-G, N 3593138.5, E 4145056.6
Port Neal North Powerplant, West of Salix, Iowa

JOB NO.: 52-69-5092
RIG / METHOD: CME 75HT / Straight Auger
CREW: CL&SG

BORING LOG

BORING No.: 15
SHEET 2 of 2
DATE: 4-23-2009

WATER LEVELS ▽ No Groundwater Encountered

ELEV (NAVD88)	DEPTH (feet)	LOG	LITHOLOGY DESCRIPTION	SAMPLE	SPT	qu (tsf)	DRY DENSITY (pcf)	MOISTURE (%)	DEPTH (feet)
			SP - POORLY GRADED SAND; 95-100% fine sand; nonplastic; light grayish brown; wet; medium dense. (Alluvium)						20.0
									22.5
					7 8 10 (18)				
1062.7	25.0		SP-SM - POORLY GRADED SAND with Silt; 90-95% fine to medium sand; nonplastic; yellowish brown; wet; medium dense. (Alluvium)						25.0
									27.5
					2 3 6 (9)				
1057.7	30.0		Boring Terminated at: 30.0ft						30.0
									32.5
									35.0
									37.5
									40.0

* Unconfined compressive strength was estimated using a calibrated hand penetrometer.

Figure C - 16b

HWS
Solutions Through Service
825 J Street
Lincoln, NE 68501
402-479-2200 * Fax: 402-479-2276
www.hws.com

PROJECT: Mid American Energy Fly Ash Ponds Containment Assessment

LOCATION: Section G-G, N 3593120.4, E 4145071.8 Port Neal North Powerplant, West of Salix, Iowa

JOB NO.: 52-69-5092
RIG / METHOD: CME 75HT / Straight Auger
CREW: CL&SG

BORING LOG

BORING No.: 15b
SHEET 1 of 1
DATE: 4-23-2009

WATER LEVELS ▽ No Groundwater Encountered

ELEV (NAVD88)	DEPTH (feet)	LITHOLOGY DESCRIPTION	SAMPLE	SPT	DEPTH (feet)
1087.8	0.0	FLY ASH; 10-15% fine to coarse sand; 5-10% fine to coarse gravel; dark yellowish brown; moist; loose. (Fill)			0.0
1086.8	1.0	FLY ASH; light gray; wet to saturated; loose. (Fill)			2.5
1084.3	3.5	FLY ASH; light gray; wet; loose. (Fill)	■	1 1 1 (2)	5.0
1082.8	5.0	FLY ASH with bottomash; light gray with black; wet to saturated; loose. (Fill)			7.5
1079.3	8.5	FLY ASH with bottomash; light gray with black; wet; loose. (Fill)	■	1 0 1 (1)	10.0
					12.5
1074.0	13.8	CL/CH - LEAN TO FAT CLAY: 0-5% fine sand; medium to high plasticity; dark gray; wet; stiff. (Alluvium)	■	3 4 7 (11)	15.0
1072.8	15.0	MH - SILT; low plasticity; dark olive brown mottled with yellowish red; wet; medium dense. (Alluvium)			17.5
1070.3	17.5	SP - POORLY GRADED SAND; 95-100% fine to medium sand, nonplastic; light grayish brown; wet; medium dense. (Alluvium)	■	3 4 6 (10)	20.0
1067.8	20.0	Boring Terminated at: 20.0ft			

BORING LOG MID AMERICA ENERGY LOGS.GPJ HWS.GDT 6/11/09

Figure C - 17

HWS
Solutions Through Service
825 J Street
Lincoln, NE 68501
402-479-2200 * Fax: 402-479-2276
www.hws.com

PROJECT: Mid American Energy Fly Ash Ponds Containment Assessment

LOCATION: Section G-G, 7' N of B-15 Port Neal North Powerplant, West of Salix, Iowa

JOB NO.: 52-69-5092
RIG / METHOD: CME 75HT / Straight Auger
CREW: CL&SG

BORING LOG

BORING No.: 15N
SHEET 1 of 1
DATE: 4-23-2009

WATER LEVELS ▽ No Groundwater Encountered

ELEV (NAVD88)	DEPTH (feet)	LOG	LITHOLOGY DESCRIPTION	SAMPLE	DEPTH (feet)
1087.7	0.0		FLY ASH; 10-15% fine to coarse sand; 5-10% fine to coarse gravel; yellowish brown; moist; loose. (Fill)		0.0
1086.2	1.5		FLY ASH; gray; wet to saturated; loose. (Fill)		2.5
1082.7	5.0		FLY ASH with 5-10% bottomash; trace of gravel; gray; wet to saturated; loose. (Fill)		5.0
					7.5
					10.0
1075.7	12.0		CL - LEAN CLAY; medium plasticity; dark gray; wet; stiff. (Fill)		12.5
1074.2	13.5		SM - SILTY SAND: 75-85% fine to coarse sand; low plasticity; yellowish brown; wet: loose to medium dense. (Alluvium)		
1073.2	14.5		CL - LEAN CLAY; medium plasticity; gray mottled with olive brown; wet: stiff. (Alluvium)		
1072.7	15.0		Boring Terminated at: 15.0ft		15.0
					17.5
					20.0

BORING LOG MID AMERICA ENERGY LOGS.GPJ HWS.GDT 6/9/09

HWS
Solutions Through Service
825 J Street
Lincoln, NE 68501
402-479-2200 * Fax: 402-479-2276
www.hws.com

PROJECT: Mid American Energy Fly Ash Ponds Containment Assessment

LOCATION: Section G-G, 9' S of B-15 Port Neal North Powerplant, West of Salix, Iowa

JOB NO.: 52-69-5092
RIG / METHOD: CME 75HT / Straight Auger
CREW: CL&SG

BORING LOG

BORING No.: 15S
SHEET 1 of 1
DATE: 4-23-2009

WATER LEVELS ▽ No Groundwater Encountered

ELEV (NAVD88)	DEPTH (feet)	LOG	LITHOLOGY DESCRIPTION	SAMPLE	DEPTH (feet)
1087.7	0.0		FLY ASH; 10-15% fine to coarse sand; 5-10% fine to coarse gravel; yellowish brown; moist; loose. (Fill)		0.0
1086.7	1.0		FLY ASH; gray; wet; loose. (Fill)		2.5
1084.7	3.0		FLY ASH; 10-15% fine to coarse sand; 5-10% fine to coarse gravel; yellowish brown; wet to saturated; loose. (Fill)		5.0
1081.7	6.0		FLY ASH with 5-10% bottom ash; gray with balck; wet to saturated; loose. (Fill)		7.5
1077.7	10.0		FLY ASH; gray; wet; loose. (Fill)		10.0
					12.5
1073.7	14.0		CL/CH - LEAN TO FAT CLAY; 0-5% fine sand; medium to high plasticity; dark gray mottled with black; wet; stiff. (Alluvium)		
1072.7	15.0		Boring Terminated at: 15.0ft		15.0
					17.5
					20.0

HWS
Solutions Through Service
825 J Street
Lincoln, NE 68501
402-479-2200 * Fax: 402-479-2276
www.hws.com

PROJECT: Mid American Energy Fly Ash Ponds Containment Assessment

LOCATION: Section G-G, 14' N of B-15 Port Neal North Powerplant, West of Salix, Iowa

JOB NO.: 52-69-5092
RIG / METHOD: CME 75HT / Straight Auger
CREW: CL&SG

BORING LOG

BORING No.: 15X
SHEET 1 of 1
DATE: 4-23-2009

WATER LEVELS ▽ No Groundwater Encountered

ELEV (NAVD88)	DEPTH (feet)	LOG	LITHOLOGY DESCRIPTION	SAMPLE	SPT	DRY DENSITY (pcf)	MOISTURE (%)	SAND CONTENT (%)	DEPTH (feet)
1087.7	0.0		FLY ASH; 0-5% fine to coarse sand; gray; wet; loose. (Fill)						0.0
									2.5
1082.7	5.0		FLY ASH with 10-20% bottom ash; grayish brown with yellowish brown and black; wet; medium dense. (Fill)	26		57.6	55.9		5.0
1081.9	5.8		BOTTOM ASH; black; moist; loose. (Fill)						
1081.4	6.3		FLY ASH with 10-20% bottom ash; gray with black; wet; loose. (Fill)						7.5
1079.7	8.0		CL - LEAN CLAY, medium plasticity; brown mottled with black and dark brown, wet; stiff. (Fill)						
1078.2	9.5		SM - SILTY SAND; 70-80% fine to coarse sand; nonplastic; light yellowish brown; wet; medium dense. (Fill)					74.0	10.0
1077.2	10.5		SM - SILTY SAND; 70-80% fine to coarse sand; nonplastic; light yellowish brown; wet; medium dense; with lean clay seams. (Fill)						
1075.7	12.0		CL/CH - LEAN TO FAT CLAY; medium to high plasticity; gray; wet; stiff. (Alluvium)						12.5
1074.2	13.5		CL/CH - LEAN TO FAT CLAY; medium to high plasticity; gray; wet; stiff. (Alluvium)		2 4 5 (9)				
1072.7	15.0		Boring Terminated at 15.0ft						15.0
									17.5
									20.0

BORING LOG MID AMERICA ENERGY LOGS.GPJ HWS.GDT 6/9/09

Figure C - 20

HWS
Solutions Through Service

825 J Street
Lincoln, NE 68501
402-479-2200 * Fax: 402-479-2276
www.hws.com

PROJECT: Mid American Energy Fly Ash Ponds Containment Assessment

LOCATION: Section G-G, 46' N of B-15b Port Neal North Powerplant, West of Salix, Iowa

JOB NO.: 52-69-5092
RIG / METHOD: Hand Auger / Hand Auger
CREW: CL&GW

BORING LOG

BORING No.: 15N-1
SHEET 1 of 1
DATE: 6-11-2009

WATER LEVELS ∇ No Groundwater Encountered

ELEV (NAVD88)	DEPTH (feet)	LOG	LITHOLOGY DESCRIPTION	SAMPLE	DEPTH (feet)
1087.6	0.0		ML - SANDY SILT; 35-45% fine sand; low plasticity; dark grayish brown; wet; loose; with fly ash chuncks. (Fill)		0.0
					2.5
1084.1	3.5		ML - SANDY SILT; 35-45% fine sand; low plasticity; dark grayish brown; wet to saturated; loose; with fly ash chunks. (Fill)		
					5.0
1081.0	6.6		CL - LEAN CLAY; medium plasticity; very dark grayish brown; wet; very stiff; with clayey sand seams. (Fill)		
1080.4	7.2		SP-SM - POORLY GRADED SAND with Silt; dark brown; moist to wet; loose. (Fill)		
1079.9	7.7		CL - LEAN CLAY with Sand; 15-25% fine sand; medium plasticity; very dark grayish brown; wet; stiff to very stiff. (Fill)		7.5
1078.5	9.1		SP-SM - POORLY GRADED SAND with Silt; 85-95% fine sand; nonplastic; dark yellowish brown; moist to wet; medium dense. (Fill)		
1077.6	10.0		Boring Terminated at: 10.0ft		10.0
					12.5
					15.0
					17.5
					20.0

APPENDIX G. EMBANKMENT STABILITY FAILURE ANALYSES

Mid American Energy Fly Ash Containment Section A-A Drained

h:\geodata\projects\52-6x-xxxx\52-69-5092 mid american energy\analysis\section a-a drained cleanout inside with high water.pl2 Run By: Brandon Desh 6/10/2009 01:42PM

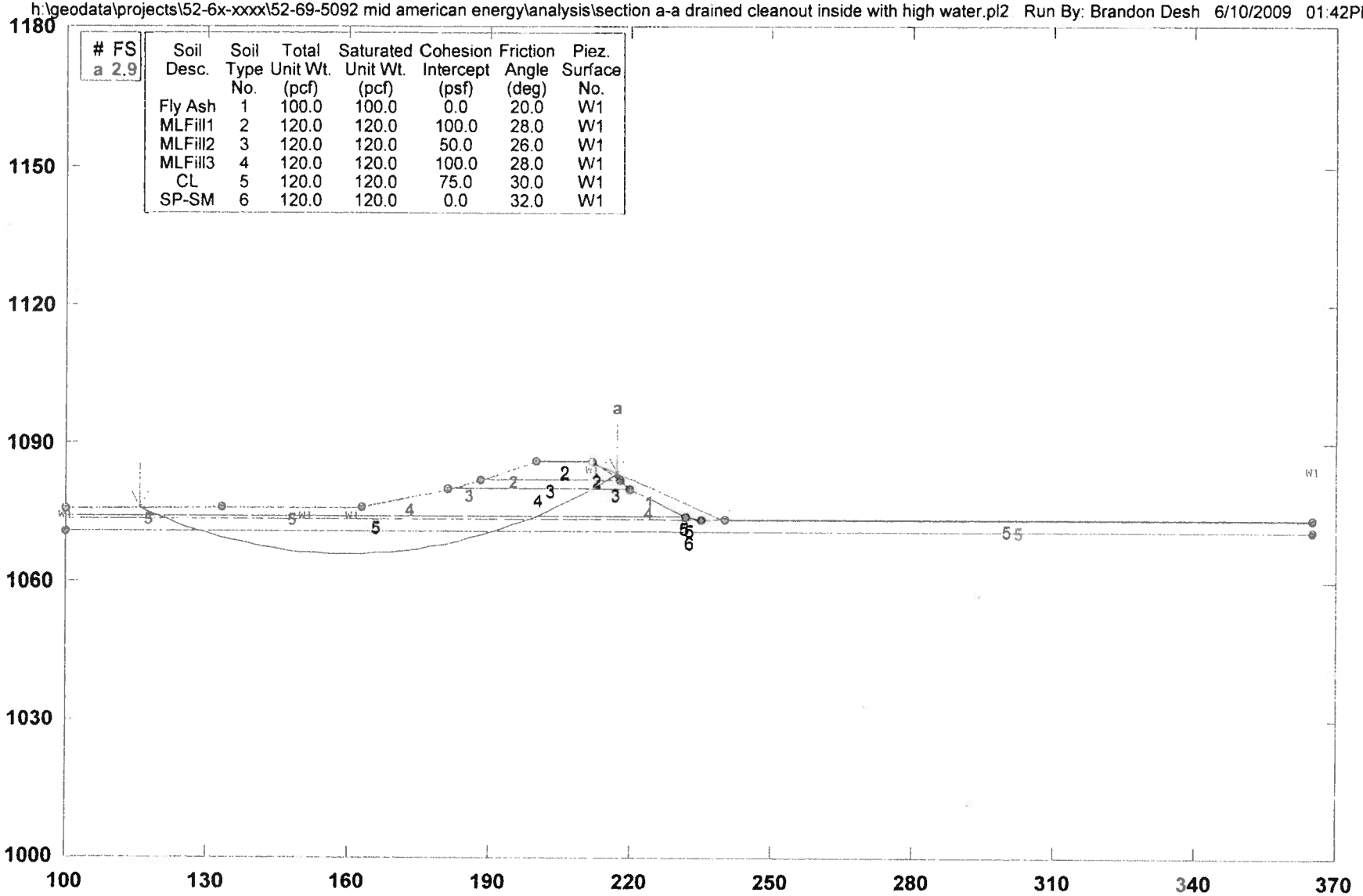

# FS	
a	2.9

Soil Desc.	Soil Type No.	Total Unit Wt. (pcf)	Saturated Unit Wt. (pcf)	Cohesion Intercept (psf)	Friction Angle (deg)	Piez. Surface No.
Fly Ash	1	100.0	100.0	0.0	20.0	W1
MLFill1	2	120.0	120.0	100.0	28.0	W1
MLFill2	3	120.0	120.0	50.0	26.0	W1
MLFill3	4	120.0	120.0	100.0	28.0	W1
CL	5	120.0	120.0	75.0	30.0	W1
SP-SM	6	120.0	120.0	0.0	32.0	W1

GSTABL7 v.2 FSmin=2.9

Safety Factors Are Calculated By The Modified Bishop Method

GSTABL7

Mid American Energy Fly Ash Containment Section A-A Undrained

h:\geodata\projects\52-6x-xxxx\52-69-5092 mid american energy\analysis\section a-a undrained cleanout inside with high water.pl2 Run By: Brandon Desh 6/12/2009 07:34AM

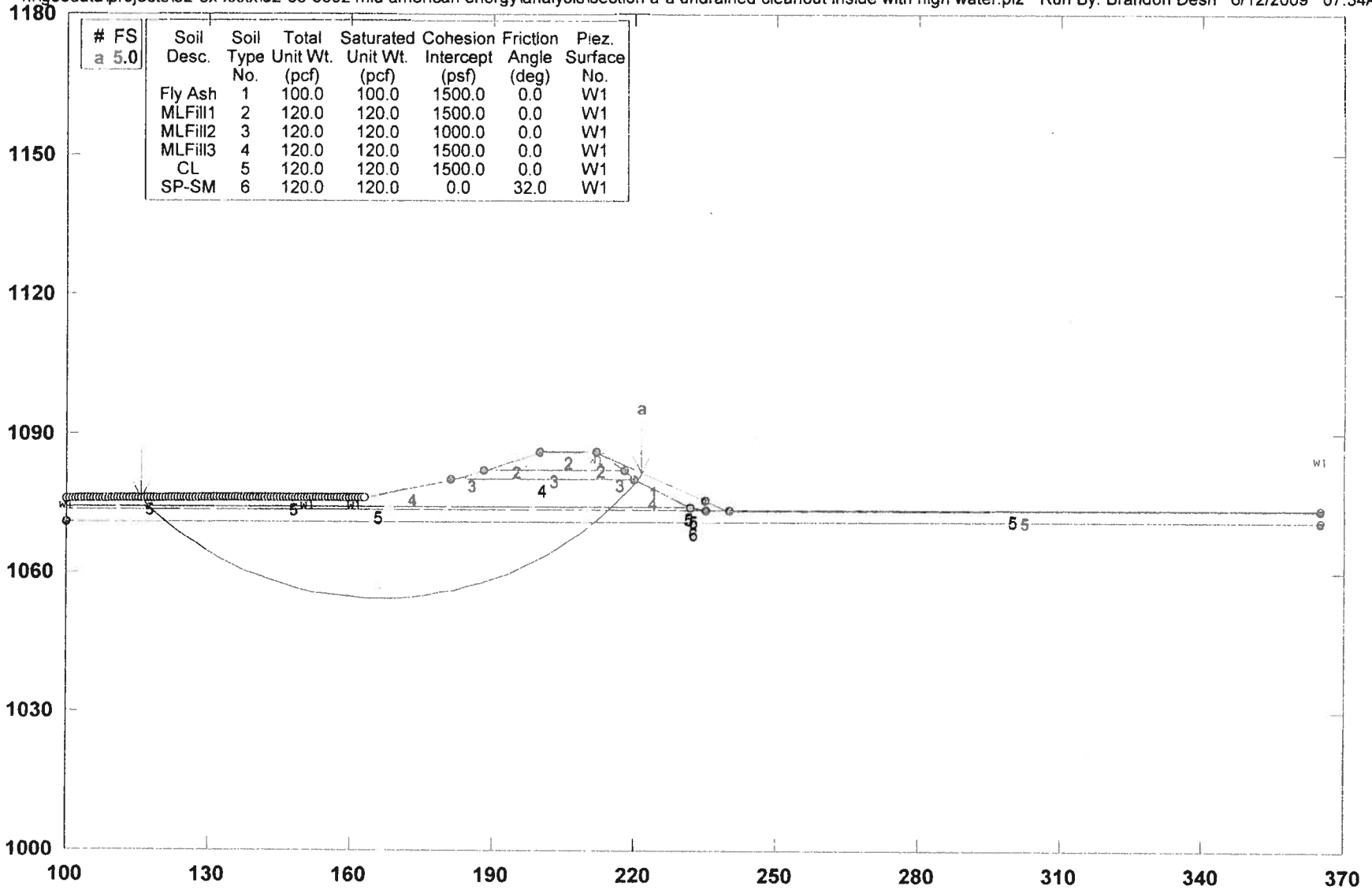

# FS a 5.0	Soil Desc.	Soil Type No.	Total Unit Wt. (pcf)	Saturated Unit Wt. (pcf)	Cohesion Intercept (psf)	Friction Angle (deg)	Piez. Surface No.
	Fly Ash	1	100.0	100.0	1500.0	0.0	W1
	MLFill1	2	120.0	120.0	1500.0	0.0	W1
	MLFill2	3	120.0	120.0	1000.0	0.0	W1
	MLFill3	4	120.0	120.0	1500.0	0.0	W1
	CL	5	120.0	120.0	1500.0	0.0	W1
	SP-SM	6	120.0	120.0	0.0	32.0	W1

GSTABL7 v.2 FSmin=5.0

Safety Factors Are Calculated By The Modified Bishop Method

GSTABL7

Mid American Energy Fly Ash Containment Section B-B Drained

h:\geodata\projects\52-6x-xxxx\52-69-5092 mid american energy\analysis\section b-b drained clean out inside with water el 1082.pl2 Run By: Brandon Desh 6/10/2009 08:42AM

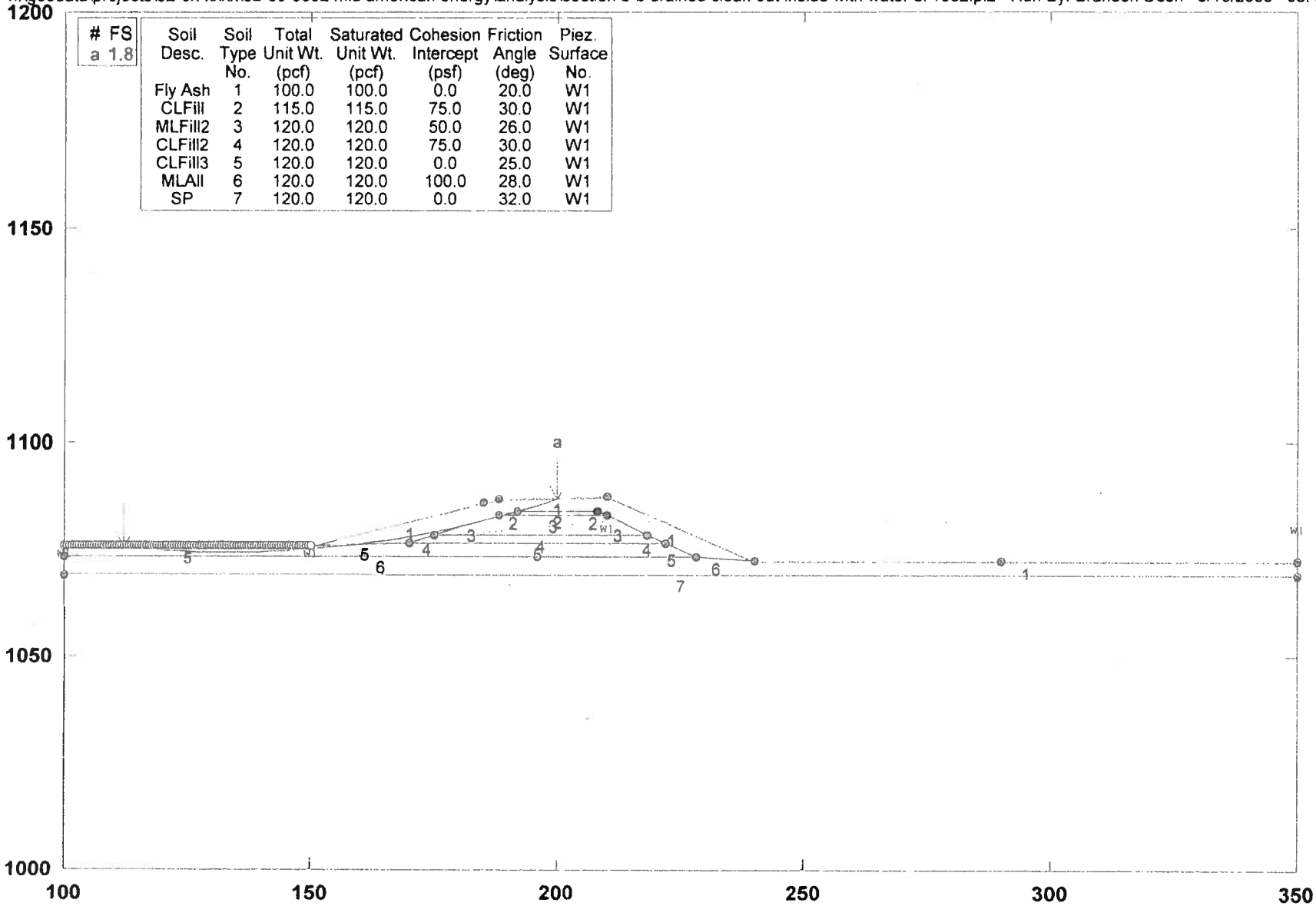

# FS	Soil Desc.	Soil Type No.	Total Unit Wt. (pcf)	Saturated Unit Wt. (pcf)	Cohesion Intercept (psf)	Friction Angle (deg)	Piez. Surface No.
a 1.8	Fly Ash	1	100.0	100.0	0.0	20.0	W1
	CLFill	2	115.0	115.0	75.0	30.0	W1
	MLFill2	3	120.0	120.0	50.0	26.0	W1
	CLFill2	4	120.0	120.0	75.0	30.0	W1
	CLFill3	5	120.0	120.0	0.0	25.0	W1
	MLAll	6	120.0	120.0	100.0	28.0	W1
	SP	7	120.0	120.0	0.0	32.0	W1

GSTABL7 v.2 FSmin=1.8

Safety Factors Are Calculated By The Modified Bishop Method

GSTABL7

Mid American Energy Fly Ash Containment Section B-B Undrained

h:\geodata\projects\52-6x-xxxx\52-69-5092 mid american energy\analysis\section b-b undrained clean out inside with water el 1082.pl2 Run By: Brandon Desh 6/12/2009 03:53PM

# FS	
a	4.5

Soil Desc.	Soil Type No.	Total Unit Wt. (pcf)	Saturated Unit Wt. (pcf)	Cohesion Intercept (psf)	Friction Angle (deg)	Piez. Surface No.
Fly Ash	1	100.0	100.0	1500.0	0.0	W1
CLFill	2	115.0	115.0	1500.0	0.0	W1
MLFill2	3	120.0	120.0	1000.0	0.0	W1
CLFill2	4	120.0	120.0	1500.0	0.0	W1
CLFill3	5	120.0	120.0	500.0	0.0	W1
MLAll	6	120.0	120.0	1500.0	0.0	W1
SP	7	120.0	120.0	0.0	32.0	W1

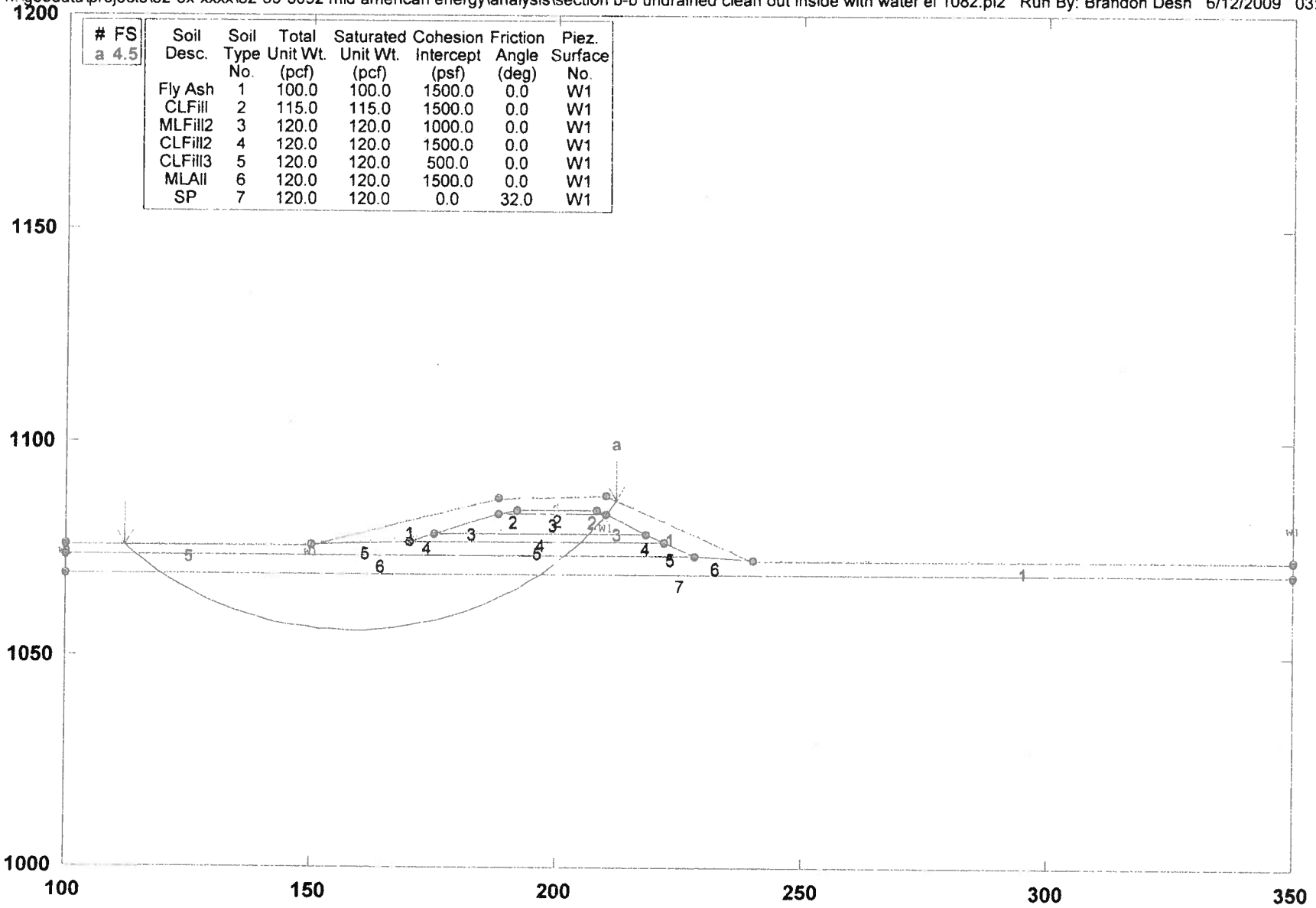

GSTABL7 v.2 FSmin=4.5

Safety Factors Are Calculated By The Modified Bishop Method

GSTABL7

Mid American Energy Fly Ash Containment Section E-E Drained Analysis

h:\geodata\projects\52-6x-xxxx\52-69-5092 mid american energy\analysis\section e-e drained water elevation 1082.pl2 Run By: Brandon Desh 6/5/2009 04:05PM

# FS	
a	1.8

Soil Desc.	Soil Type No.	Total Unit Wt. (pcf)	Saturated Unit Wt. (pcf)	Cohesion Intercept (psf)	Friction Angle (deg)	Piez. Surface No.
Fly Ash	1	100.0	100.0	0.0	20.0	W1
CL Fill1	2	123.0	123.0	100.0	32.0	W1
SM Fill	3	120.0	120.0	0.0	30.0	W1
CL Fill2	4	132.0	132.0	75.0	30.0	W1
CH Alluv	5	116.0	116.0	75.0	30.0	W1
SM Alluv	6	110.0	110.0	0.0	30.0	W1
SP Alluv	7	120.0	120.0	0.0	32.0	W1

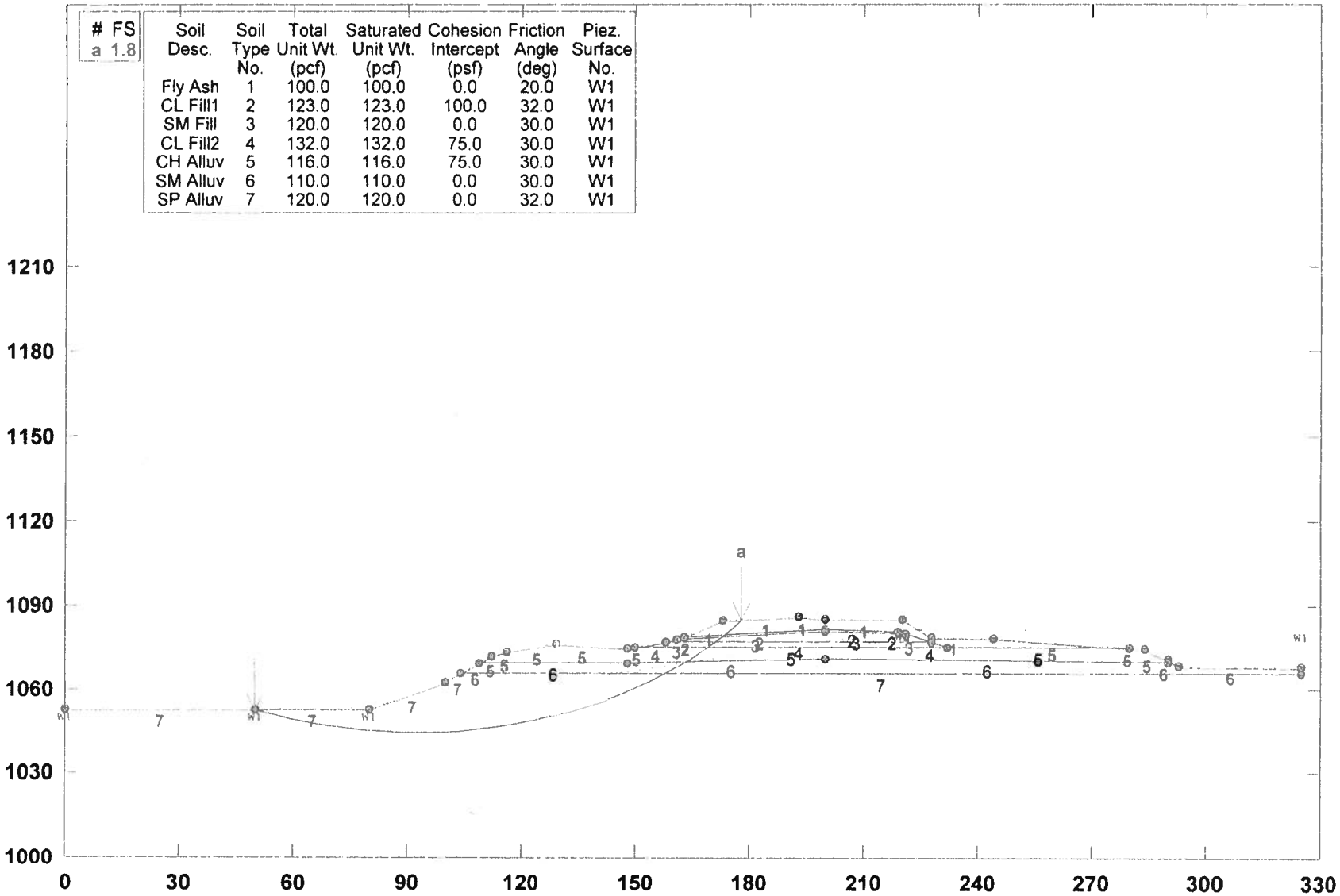

GSTABL7 v.2 FSmin=1.8

Safety Factors Are Calculated By The Modified Bishop Method

GSTABL7

Mid American Energy Fly Ash Containment Section E-E Undrained Analysis

h:\geodata\projects\52-6x-xxxx\52-69-5092 mid american energy\analysis\section e-e undrained water elevation 1082.pl2 Run By: Brandon Desh 6/5/2009 04:19PM

#	FS
a	2.2

Soil Desc.	Soil Type No.	Total Unit Wt. (pcf)	Saturated Unit Wt. (pcf)	Cohesion Intercept (psf)	Friction Angle (deg)	Piez. Surface No.
Fly Ash	1	100.0	100.0	1800.0	0.0	W1
CL Fill1	2	123.0	123.0	2000.0	0.0	W1
SM Fill	3	120.0	120.0	0.0	30.0	W1
CL Fill2	4	132.0	132.0	1500.0	0.0	W1
CH Alluv	5	116.0	116.0	1500.0	0.0	W1
SM Alluv	6	110.0	110.0	0.0	30.0	W1
SP Alluv	7	120.0	120.0	0.0	32.0	W1

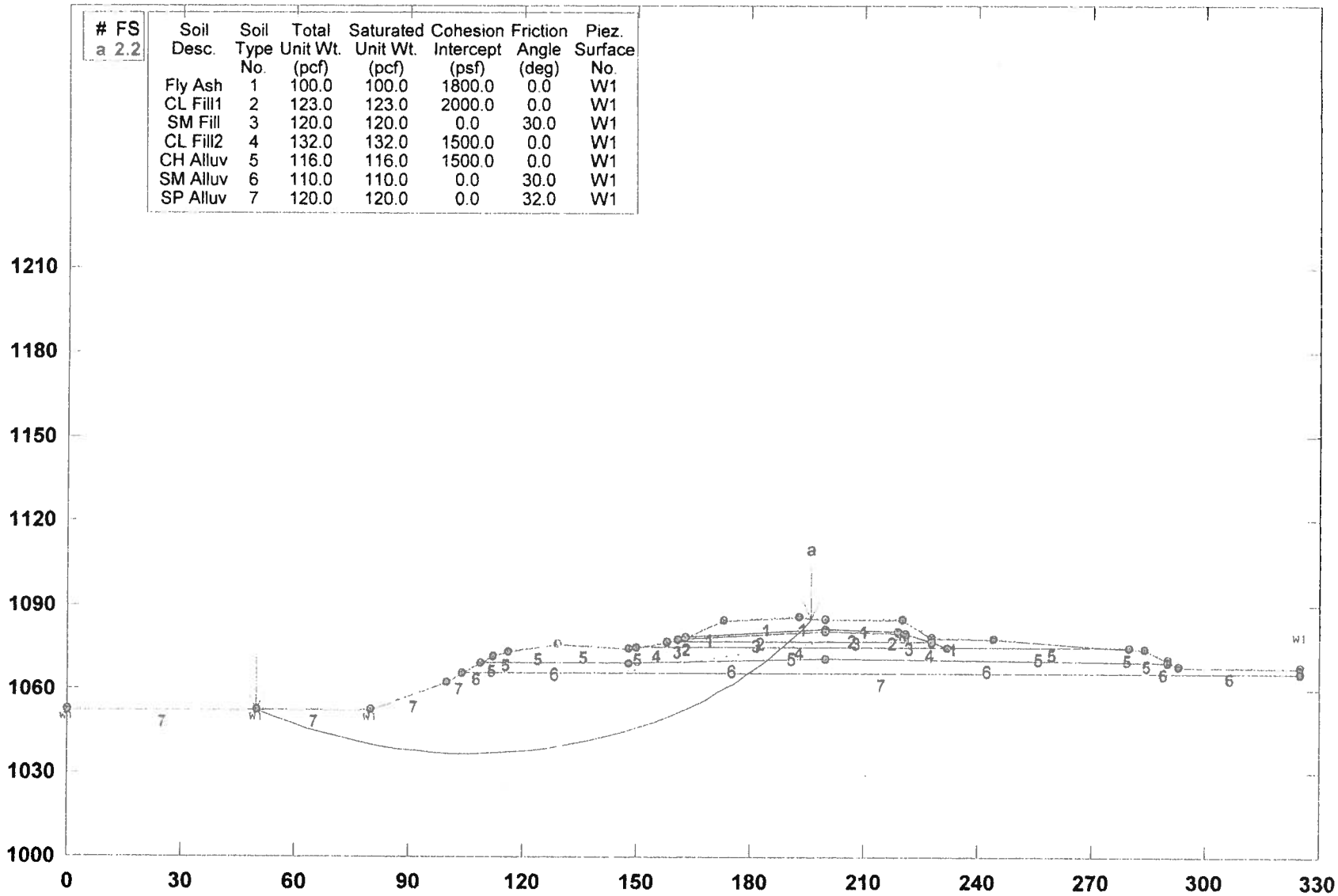

GSTABL7 v.2 FSmin=2.2

Safety Factors Are Calculated By The Modified Bishop Method

GSTABL7

Mid American Energy Fly Ash Containment Section G-G Drained Analysis

h:\geodata\projects\52-6x-xxxx\52-69-5092 mid american energy\analysis\section g-g drained with clean out water el 1082.pl2 Run By: Brandon Desh 6/5/2009 01:42PM

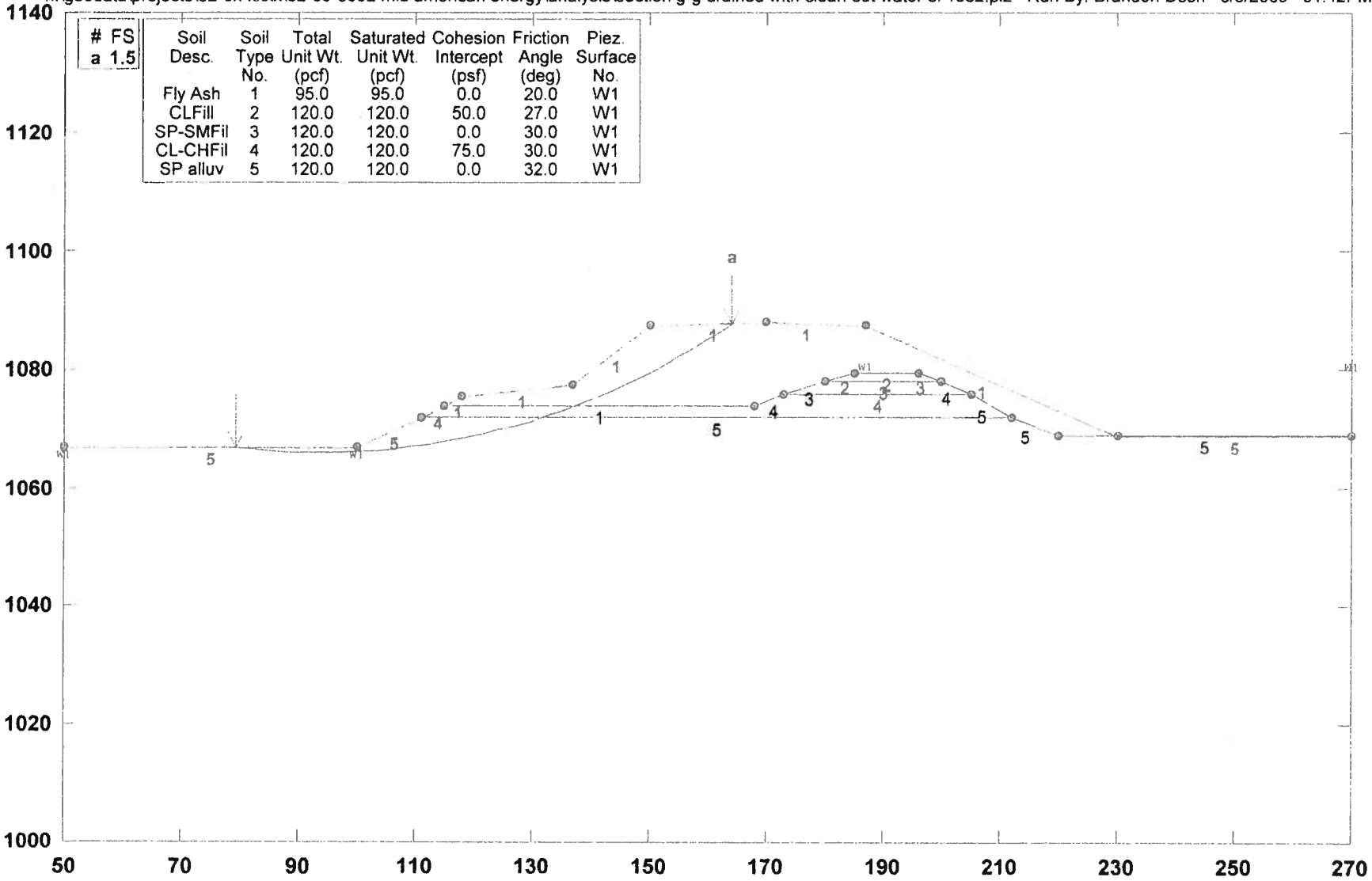

# FS a 1.5	Soil Desc.	Soil Type No.	Total Unit Wt. (pcf)	Saturated Unit Wt. (pcf)	Cohesion Intercept (psf)	Friction Angle (deg)	Piez. Surface No.
	Fly Ash	1	95.0	95.0	0.0	20.0	W1
	CLFill	2	120.0	120.0	50.0	27.0	W1
	SP-SMFil	3	120.0	120.0	0.0	30.0	W1
	CL-CHFil	4	120.0	120.0	75.0	30.0	W1
	SP alluv	5	120.0	120.0	0.0	32.0	W1

GSTABL7 v.2 FSmin=1.5

Safety Factors Are Calculated By The Modified Bishop Method

GSTABL7

Mid American Energy Fly Ash Containment Section G-G Undrained Analysis

h:\geodata\projects\52-6x-xxxx\52-69-5092 mid american energy\analysis\section g-g undrained with clean out water el 1082.pl2 Run By: Brandon Desh 6/11/2009 08:41PM

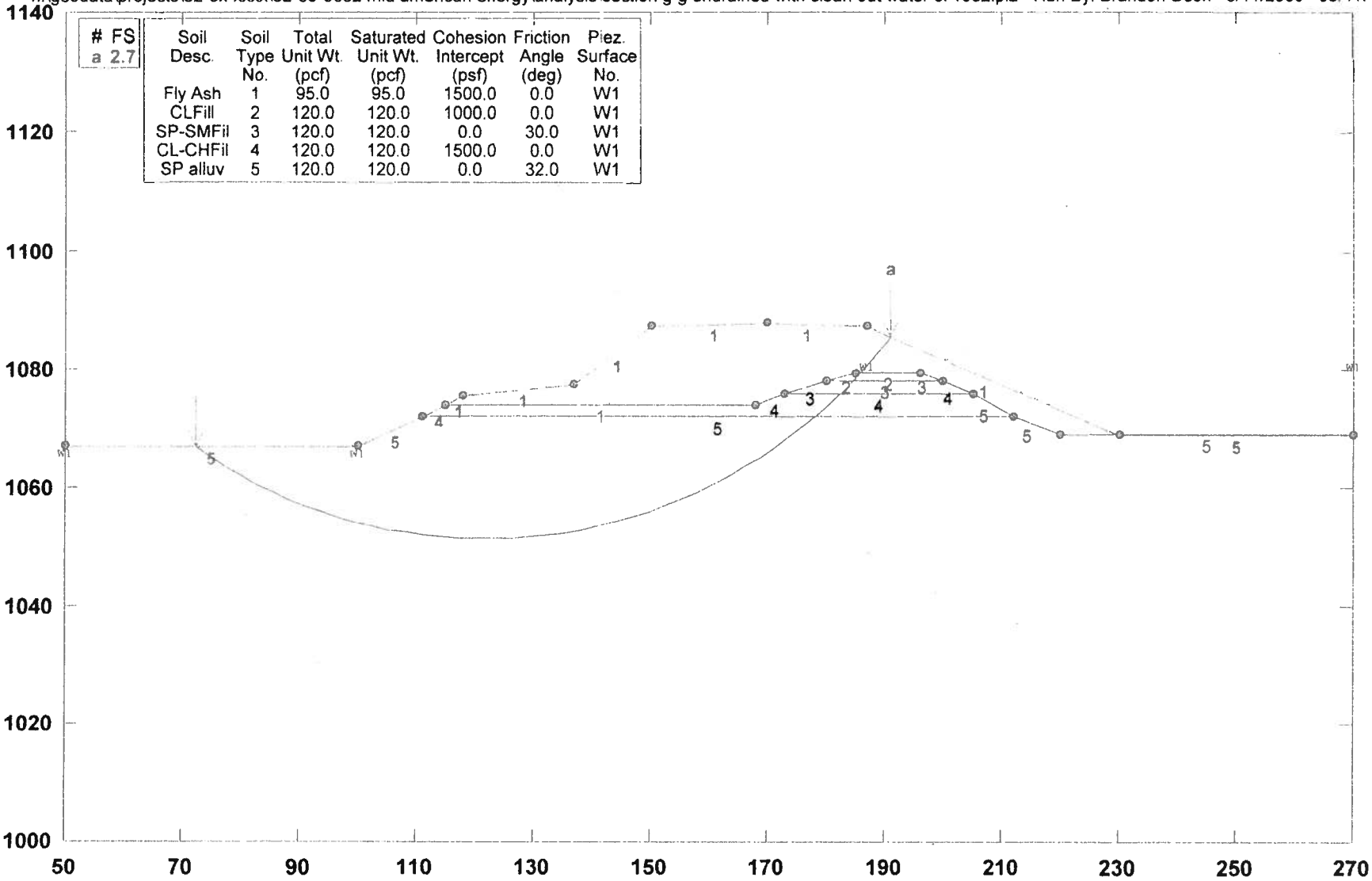

# FS a 2.7	Soil Desc.	Soil Type No.	Total Unit Wt. (pcf)	Saturated Unit Wt. (pcf)	Cohesion Intercept (psf)	Friction Angle (deg)	Piez. Surface No.
	Fly Ash	1	95.0	95.0	1500.0	0.0	W1
	CLFill	2	120.0	120.0	1000.0	0.0	W1
	SP-SMFil	3	120.0	120.0	0.0	30.0	W1
	CL-CHFil	4	120.0	120.0	1500.0	0.0	W1
	SP alluv	5	120.0	120.0	0.0	32.0	W1

GSTABL7 v.2 FSmin=2.7

Safety Factors Are Calculated By The Modified Bishop Method

GSTABL7

Mid American Energy Fly Ash Containment Section H2-H2 Drained Analysis

h:\geodata\projects\52-6x-xxxx\52-69-5092 mid american energy\analysis\section h2-h2 drained analysis with water el 1082.pl2 Run By: Brandon Desh 6/5/2009 03:21PM

# FS a 2.0	Soil Desc.	Soil Type No.	Total Unit Wt. (pcf)	Saturated Unit Wt. (pcf)	Cohesion Intercept (psf)	Friction Angle (deg)	Piez. Surface No.
	Fly Ash	1	100.0	100.0	0.0	20.0	W1
	CL Fill	2	112.0	112.0	0.0	25.0	W1
	CL Alluv	3	120.0	120.0	0.0	25.0	W1
	CH Alluv	4	110.0	110.0	75.0	30.0	W1

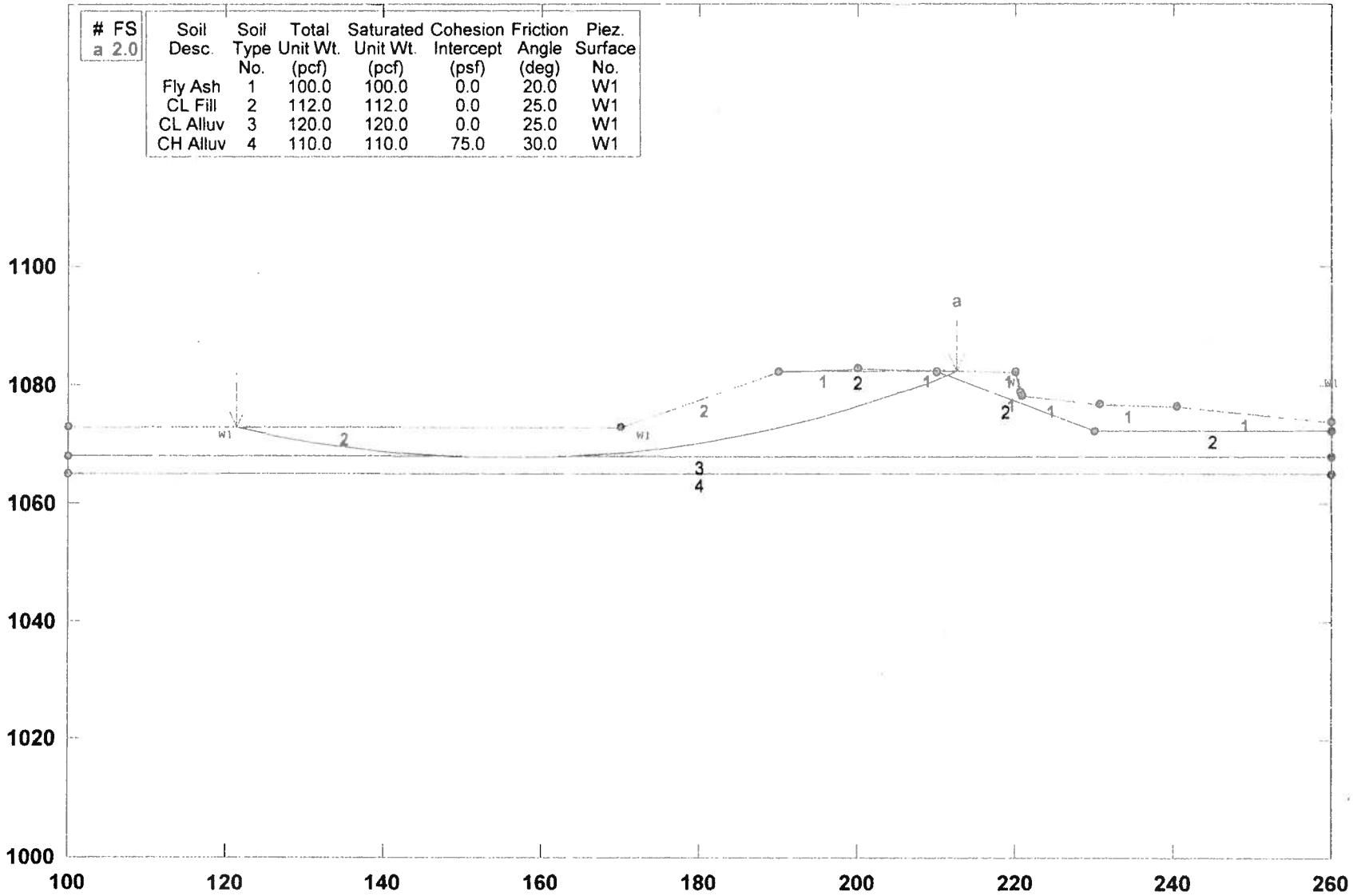

GSTABL7 v.2 FSmin=2.0

Safety Factors Are Calculated By The Modified Bishop Method

GSTABL7

Mid American Energy Fly Ash Containment Section H2-H2 Undrained Analysis

h:\geodata\projects\52-6x-xxxx\52-69-5092 mid american energy\analysis\section h2-h2 undrained analysis with water el 1082.pl2 Run By: Brandon Desh 6/5/2009 03:38PM

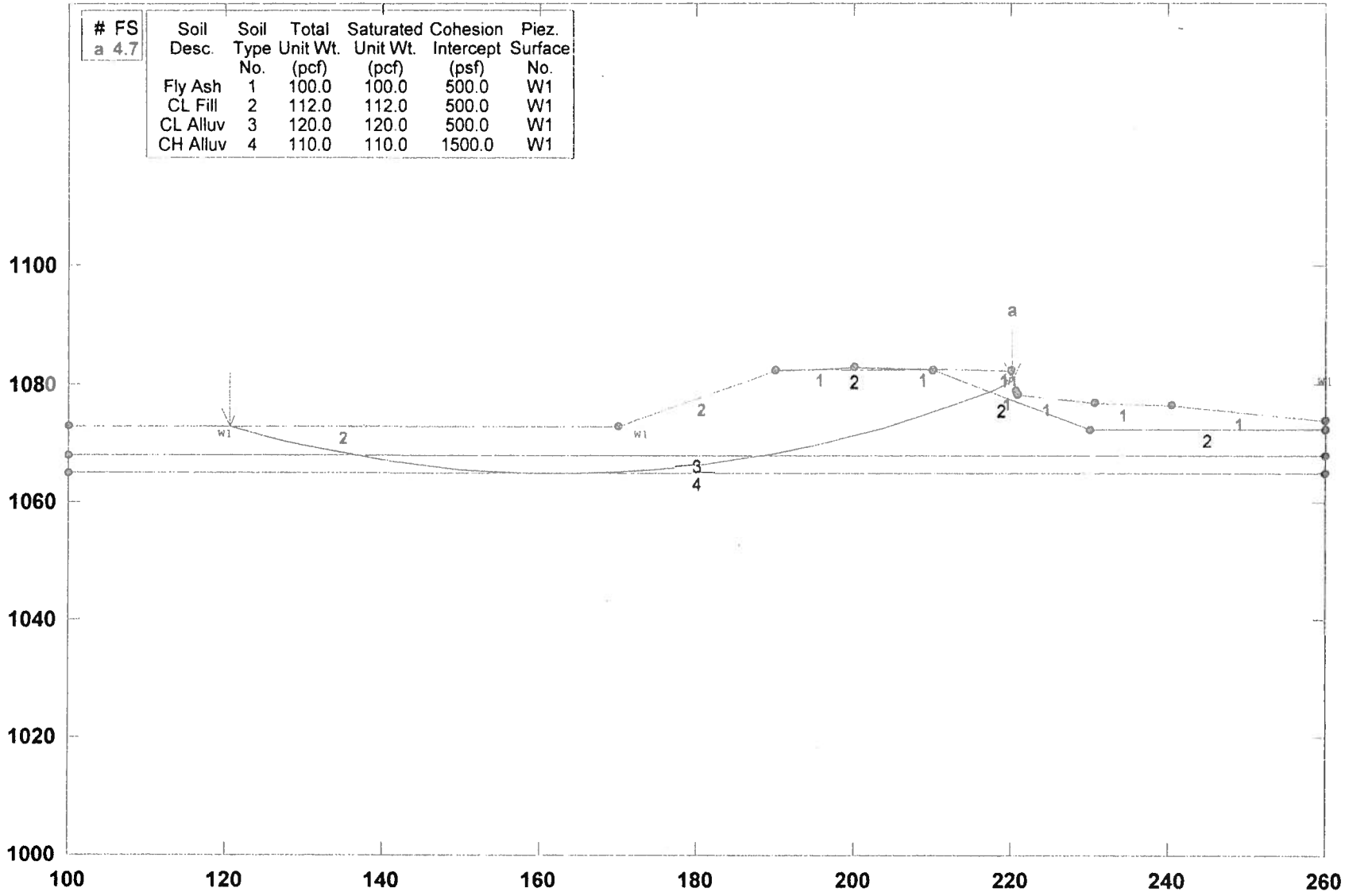

# FS	Soil Desc.	Soil Type No.	Total Unit Wt. (pcf)	Saturated Unit Wt. (pcf)	Cohesion Intercept (psf)	Piez. Surface No.
a 4.7	Fly Ash	1	100.0	100.0	500.0	W1
	CL Fill	2	112.0	112.0	500.0	W1
	CL Alluv	3	120.0	120.0	500.0	W1
	CH Alluv	4	110.0	110.0	1500.0	W1

GSTABL7 v.2 FSmin=4.7

Safety Factors Are Calculated By The Modified Bishop Method

GSTABL7

Mid American Energy Fly Ash Containment Section K2-K2 Drained Analysis

h:\geodata\projects\52-6x-xxxx\52-69-5092 mid american energy\analysis\section k2-k2 drained high water.pl2 Run By: Brandon Desh 6/10/2009 07:37AM

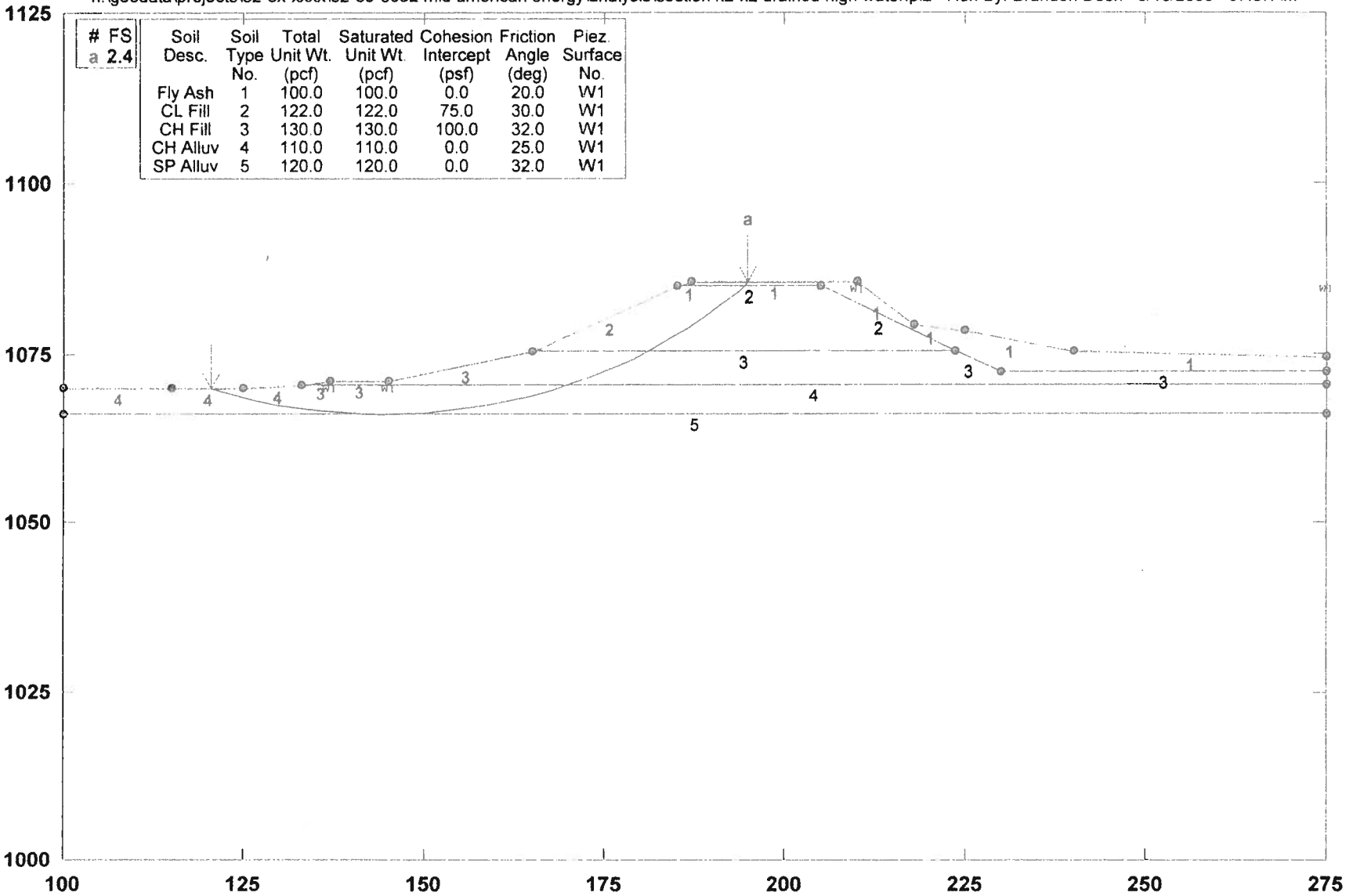

# FS	
a	2.4

Soil Desc.	Soil Type No.	Total Unit Wt. (pcf)	Saturated Unit Wt. (pcf)	Cohesion Intercept (psf)	Friction Angle (deg)	Piez. Surface No.
Fly Ash	1	100.0	100.0	0.0	20.0	W1
CL Fill	2	122.0	122.0	75.0	30.0	W1
CH Fill	3	130.0	130.0	100.0	32.0	W1
CH Alluv	4	110.0	110.0	0.0	25.0	W1
SP Alluv	5	120.0	120.0	0.0	32.0	W1

GSTABL7 v.2 FSmin=2.4

Safety Factors Are Calculated By The Modified Bishop Method

GSTABL7

Mid American Energy Fly Ash Containment Section K2-K2 Undrained Analysis

h:\geodata\projects\52-6x-xxxx\52-69-5092 mid american energy\analysis\section k2-k2 undrained high water.pl2 Run By: Brandon Desh 6/10/2009 07:40AM

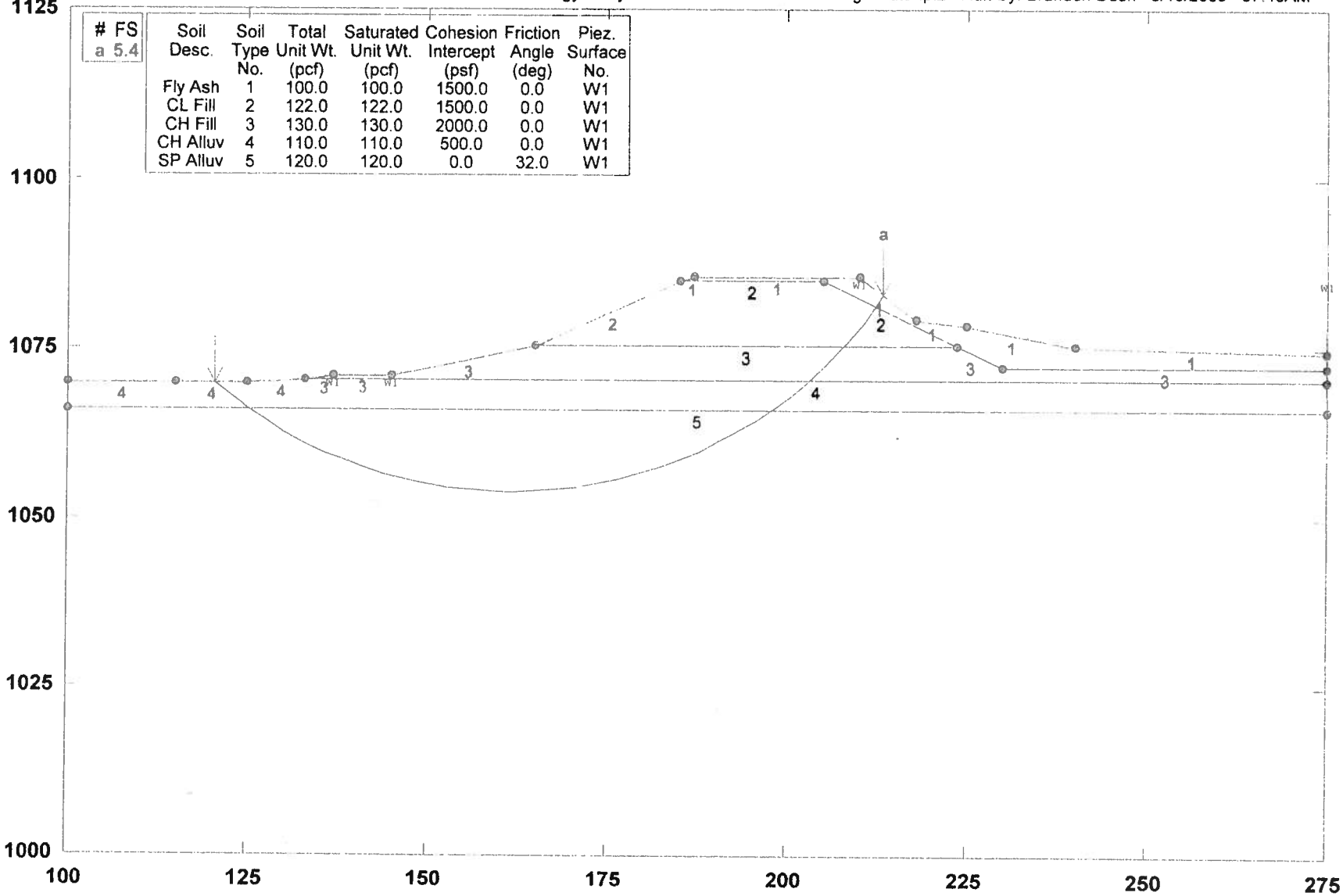

Soil Desc.	Soil Type No.	Total Unit Wt. (pcf)	Saturated Unit Wt. (pcf)	Cohesion Intercept (psf)	Friction Angle (deg)	Piez. Surface No.
Fly Ash	1	100.0	100.0	1500.0	0.0	W1
CL Fill	2	122.0	122.0	1500.0	0.0	W1
CH Fill	3	130.0	130.0	2000.0	0.0	W1
CH Alluv	4	110.0	110.0	500.0	0.0	W1
SP Alluv	5	120.0	120.0	0.0	32.0	W1

GSTABL7 v.2 FSmin=5.4

Safety Factors Are Calculated By The Modified Bishop Method

GSTABL7

APPENDIX H. UNDERSEEPAGE ANALYSES

Mid American Energy Port Neal North Fly Ash Berm Underseepage Calculations
Underseepage Analysis for Proposed Profile-June 9, 2009
Unit Side ("River") Analysis, Max Pool Elevation Shown

ic = 0.92

Station	Max Pool Elevation[1]	Floor Elevation	H	Natural Blanket Dbr	Natural Blanket Dbl	kf/kbr	kf/kbl	Df	Lr	L2	Le	Cbr	L1	Ls	w/o ho	Berm G.S.F
A-A	1082	1074	8	1.5	4	3.60E+01	2.50E+00	70	1000	76	26.458	61.482	61.482	137.48	1.2911	2.9
B-B	1082	1072.5	9.5	2	7	1.96E+03	2.50E+00	70	1000	88	35	523.16	500.78	588.78	0.533	12.1
E-E	1078.5	1074	4.5	4	7.5	3.60E+01	1.26E+04	70	500	48	2576.8	100.4	100.39	148.39	4.255	1.6
G-G	1082	1072.5	9.5	3.5	8	3.60E+01	2.70E+01	70	750	88	122.96	93.915	93.915	181.91	3.8315	1.9
H2-H2	1082	1072.5	9.5	14.5	8	1.96E+03	1.96E+03	70	1500	88	1046.3	1408.7	1109.3	1197.3	4.4303	1.7
K2-K2	1078.5	1074	5	8	4	3.91E+03	1.95E+03	70	1000	52	739.68	1479.7	871.24	923.24	2.224	1.7

Mid American Energy Port Neal North Fly Ash Berm Underseepage Calculations
Underseepage Analysis with Current Profile-June 9, 2009
Unit Side ("River") Analysis, Max Pool Elevation Shown

ic = 0.92

Station	Max Pool Elevation[1]	Floor Elevation	H	Natural Blanket Dbr	Natural Blanket Dbl	kf/kbr	kf/kbl	Df	Lr	L2	Le	Cbr	L1	Ls	w/o Berm ho	Berm G.S.F
A-A	1089	1086	3	14	4	3.60E+01	2.50E+00	70	1000	36	26.458	187.83	187.82	223.82	0.3171	11.6
B-B	1089	1076	13	2	7	1.96E+03	2.50E+00	70	1000	116	35	523.16	500.78	616.78	0.6981	9.2
E-E	1082	1069	13	2	7.5	3.60E+01	1.26E+04	70	600	116	2576.8	70.993	70.993	186.99	12.12	0.6
G-G	1086	1084.5	1.5	15.5	8	3.60E+01	2.70E+01	70	750	24	122.96	197.64	197.44	221.44	0.5356	13.7
H2-H2	1082	1074	8	16	8	1.96E+03	1.96E+03	70	1500	76	1046.3	1479.7	1135.4	1211.4	3.7076	2.0
K2-K2	1082	1074	8	6.5	4	3.91E+03	1.95E+03	70	1000	76	739.68	1333.6	846.92	922.92	3.5591	1.0

Mid American Energy Port Neal North Fly Ash Berm Underseepage Calculations
Underseepage Analysis with Current Profile-June 9, 2009
River or Pond Side Analysis, 100 year Flood Elevation =1076.0 feet
ic = 0.92

Station	100 yr Elevation[1]	Blanket Top Elevation	H	Natural Blanket Dbr	Natural Blanket Dbl	kf/kbr	kf/kbl	Df	Lr	L2	Le	Cbr	L1	Ls	w/o ho	Berm G.S.F
A-A	No river at this location															
B-B	No river at this Location															
E-E	1076	1075	1	5	5	1.26E+04	3.60E+01	70	40	20	112.25	2103.9	39.995	59.995	0.6517	7.1
G-G	1076	1074	2	4	15.5	2.69E+02	3.58E+02	70	30	28	623.24	274.44	29.881	57.881	1.83	7.8
H2-H2	1076	1073	3	8	16	1.96E+03	1.96E+03	70	50	36	1479.7	1046.3	49.962	85.962	2.8353	5.2
K2-K2	1076	1074	2	4	6.5	1.96E+03	3.91E+03	70	50	28	1333.8	739.86	49.924	77.924	1.8896	3.2

Mid American Energy Port Neal North Fly Ash Berm Underseepage Calculations

Underseepage Analysis with Proposed Profile-June 9, 2009

River or Pond Side Analysis, 100 year Flood Elevation =1076.0 feet

ic = 0.92

Station	100 yr Elevation[1]	Blanket Top Elevation	H	Natural Blanket Dbr	Natural Blanket Dbl	kf/kbr	kf/kbl	Df	Lr	L2	Le	Cbr	L1	Ls	w/o ho	Berm G.S.F
A-A	No river or pond at this location															
B-B	No river or pond at this Location															
E-E	1076	1075	1	5	1	1.26E+04	3.60E+01	70	40	20	50.2	2103.9	39.995	59.995	0.4556	2.0
G-G	1076	1074	2	4	3.5	2.69E+02	3.58E+02	70	30	28	296.16	274.44	29.881	57.881	1.673	1.9
H2-H2	1076	1073	3	8	16	1.96E+03	1.96E+03	70	50	36	1479.7	1046.3	49.962	85.962	2.8353	5.2
K2-K2	1076	1074	2	4	6.5	1.96E+03	3.91E+03	70	50	28	1333.8	739.86	49.924	77.924	1.8896	3.2

APPENDIX C

DOC 1.6 NPDES PERMIT

IOWA DEPARTMENT OF NATURAL RESOURCES

National Pollutant Discharge Elimination System (NPDES) Permit

RECORD COPY

97-00-1-02

PERMITTEE

MIDAMERICAN ENERGY COMPANY
666 GRAND AVENUE
P.O. BOX 657
DES MOINES, IA 50303

IDENTITY AND LOCATION OF FACILITY

MIDAMERICAN ENERGY COMPANY-NEAL # 1,2,3-NORTH
Section 25, T 87N, R48W
WOODBURY County, Iowa

CERTIFIED
NO. P156383159
Return Receipt Requested

IOWA NPDES PERMIT NUMBER: 9700102

RECEIVING STREAM

MISSOURI RIVER

DATE OF ISSUANCE: 04-01-1998

ROUTE OF FLOW

DATE OF EXPIRATION: 03-31-2003

YOU ARE REQUIRED TO FILE
FOR RENEWAL OF THIS PERMIT BY: 10-02-2002

EPA NUMBER: IA0004103

This permit is issued pursuant to the authority of section 402(b) of the Clean Water Act (33 U.S.C 1342(b)), Iowa Code section 455B.174, and rule 567--64.3, Iowa Administrative Code. You are authorized to operate the disposal system and to discharge the pollutants specified in this permit in accordance with the effluent limitations, monitoring requirements and other terms set forth in this permit.

You may appeal any conditions of this permit by filing a written notice of appeal and request for administrative hearing with the director of this department within 30 days of your receipt of this permit.

Any existing, unexpired Iowa operation permit or Iowa NPDES permit previously issued by the department for the facility identified above is revoked by the issuance of this Iowa NPDES operation permit.

FOR THE DEPARTMENT OF NATURAL RESOURCES

Larry J. Wilson, Director

By _____
Wayne Farrand, Supervisor
Wastewater Section
ENVIRONMENTAL PROTECTION DIVISION

Facility Name: MidAmerican Energy Company – Neal North Energy Center
Facility Number: 97-00-1-02

Outfall Number	DESCRIPTION
001	DISCHARGE CONSISTS OF ONCE THROUGH, NON-CONTACT COOLING WATER USED FOR UNITS 1 & 2 MAIN CONDENSERS AND MISCELLANEOUS HEAT EXCHANGERS ON UNITS 1 & 2, PLUS KINNEY STRAINER BACKWASH, UNITS 1 & 2 BOILER BLOWDOWN AND UNITS 1 & 2 DECANTER BACKWASH PRIOR TO DISCHARGE TO MISSOURI RIVER.
003	DISCHARGE CONSISTS OF DEMINERALIZER WASTE AND ASH SETTLING POND OVERFLOW. ASH PONDS RECEIVE ASH SLUICE WASTEWATER, PERIODIC METAL CLEANING WASTE, AND EFFLUENT FROM UNITS 1 & 2 OIL/WATER SEPARATORS (INCLUDES MISCELLANEOUS PLANT SUMPS, DRAINS AND STORMWATER RUNOFF).
009	DISCHARGE CONSISTS OF UNIT 3 ONCE THROUGH, NON-CONTACT CONDENSER COOLING WATER, UNIT 3 BOILER BLOWDOWN, AND OVERFLOW FROM UNIT 3 CONDENSATE STORAGE TANK.

Facility Name: MIDAMERICAN ENERGY CENTER-NEAL # 1,2,3-NORTH

Effluent Limitations

Permit Number: 9700102

OUTFALL NO.: 001 ONCE THROUGH, NON-CONTACT COOLING WATER USED FOR UNITS 1&2 MAIN CONDENSER AND MISCELLANEOUS HEAT EXCHANGERS

You are prohibited from discharging pollutants except in compliance with the following effluent limitations:

			EFFLUENT LIMITATIONS							
			Concentration				Mass			
Wastewater Parameter	Season	Type	7 Day Average	30 Day Average	Daily Maximum	Units	7 Day Average	30 Day Average	Daily Maximum	Units
FLOW	YEARLY	FINAL			300.0000	MGD				

NOTE: If seasonal limits apply, summer is from April 1 through October 31, and winter is from November 1 through March 31.

Facility Name: MIDAMERICAN ENERGY CENTER-NEAL # 1,2,3-NORTH

Effluent Limitations

Permit Number: 9700102

OUTFALL NO.: 003 DEMINERALIZER REGENERANT WASTE AND ASH SETTLING POND OVERFLOW RECEIVES WASTEWATER FROM ASH SLUICE, PERIODI

You are prohibited from discharging pollutants except in compliance with the following effluent limitations:

			EFFLUENT LIMITATIONS							
			Concentration				Mass			
Wastewater Parameter	Season	Type	7 Day Average	30 Day Average	Daily Maximum	Units	7 Day Average	30 Day Average	Daily Maximum	Units
PH (MINIMUM - MAXIMUM)	YEARLY	FINAL	6.0000		9.0000	STD UNITS				
ACUTE TOXICITY, CERIODAPHNIA	YEARLY	FINAL						1.00		NON TOXIC
ACUTE TOXICITY, PIMEPHALES	YEARLY	FINAL						1.00		NON TOXIC
TOTAL SUSPENDED SOLIDS	YEARLY	FINAL		30.0000	100.0000	MG/L		1500.00	5000.00	LBS/DAY
COPPER,TOTAL (AS CU)	YEARLY	FINAL			1.0000	MG/L			22.35	LBS/DAY
IRON,TOTAL (AS FE)	YEARLY	FINAL			1.0000	MG/L			22.35	LBS/DAY
OIL AND GREASE	YEARLY	FINAL		15.0000	20.0000	MG/L		750.00	1000.00	LBS/DAY

NOTE: If seasonal limits apply, summer is from April 1 through October 31, and winter is from November 1 through March 31.

Facility Name: MIDAMERICAN ENERGY CENTER-NEAL # 1,2,3-NORTH

Effluent Limitations

Permit Number: 9700102

OUTFALL NO.: 009 UNIT 3 ONCE THROUGH, NON-CONTACT CONDENSER COOLING WATER, UNIT 3 BOILER BLOWDOWN, OVERFLOW FROM UNIT 3 COND

You are prohibited from discharging pollutants except in compliance with the following effluent limitations:

			EFFLUENT LIMITATIONS							
			Concentration				Mass			
Wastewater Parameter	Season	Type	7 Day Average	30 Day Average	Daily Maximum	Units	7 Day Average	30 Day Average	Daily Maximum	Units
FLOW	YEARLY	FINAL			420.0000	MGD				
ACUTE TOXICITY, CERIODAPHNIA	YEARLY	FINAL						1.00		NON TOXIC
ACUTE TOXICITY, PIMEPHALES	YEARLY	FINAL						1.00		NON TOXIC

NOTE: If seasonal limits apply, summer is from April 1 through October 31, and winter is from November 1 through March 31.

Facility Name: MIDAMERICAN ENERGY CENTER-NEAL # 1,2,3-NORTH

Permit Number: 9700102

Monitoring and Reporting Requirements

(a) Samples and measurements taken shall be representative of the volume and nature of the monitored wastewater.

(b) Analytical and sampling methods as specified in 40 CFR Part 136 or other methods approved in writing by the department, shall be utilized.

(c) Chapter 63 of the rules provides you with further explanation of your monitoring requirements.

(d) You are required to report all data including calculated results needed to determine compliance with the limitations contained in this permit. This includes daily maximums and minimums, 30-day averages and 7-day averages for all parameters that have concentration (mg/l) and mass (lbs/day) limits. Also, flow data shall be reported in million gallons per day (MGD).

(e) Results of all monitoring shall be recorded on forms provided by, or approved by, the department, and submitted to the department by the fifteenth day following the close of the reporting period. Your reporting period is on a monthly basis, ending on the last day of each month.

Outfall Number	Wastewater Parameter	Sample Frequency	Sample Type	Monitoring Location
001	FLOW	7/WEEK	24 HR TOTAL	FINAL EFFLUENT
001	PH (MINIMUM - MAXIMUM)	1/WEEK	GRAB	FINAL EFFLUENT
003	FLOW	1/WEEK	INSTANTANE	FINAL EFFLUENT
003	TOTAL SUSPENDED SOLIDS	1/MONTH	GRAB	FINAL EFFLUENT
003	PH (MINIMUM - MAXIMUM)	1/MONTH	GRAB	FINAL EFFLUENT
003	COPPER,TOTAL (AS CU)	1/WEEK	GRAB	FINAL EFFLUENT
003	IRON,TOTAL (AS FE)	1/WEEK	GRAB	FINAL EFFLUENT
003	OIL AND GREASE	1/MONTH	GRAB	FINAL EFFLUENT
003	ACUTE TOXICITY, CERIODAPHNIA	1/12 MONTHS	24 HR COMP	FINAL EFFLUENT
003	ACUTE TOXICITY, PIMEPHALES	1/12 MONTHS	24 HR COMP	FINAL EFFLUENT
003	VISUAL OBSERVATION	QUARTERLY	GRAB	FINAL EFFLUENT
003	TOTAL SUSPENDED SOLIDS	1/MONTH	GRAB	INTAKE FROM STREAM
003	COPPER,TOTAL (AS CU)	1/WEEK	GRAB	INTAKE FROM STREAM
003	IRON,TOTAL (AS FE)	1/WEEK	GRAB	INTAKE FROM STREAM
003	OIL AND GREASE	1/MONTH	GRAB	INTAKE FROM STREAM
003	TOTAL SUSPENDED SOLIDS	1/MONTH	CALCULATED	FINAL EFFLUENT (NET ADDITION)
003	COPPER,TOTAL (AS CU)	1/WEEK	MEASUREMENT	FINAL EFFLUENT (NET ADDITION)
003	IRON,TOTAL (AS FE)	1/WEEK	MEASUREMENT	FINAL EFFLUENT (NET ADDITION)
003	OIL AND GREASE	1/MONTH	CALCULATED	FINAL EFFLUENT (NET ADDITION)
009	FLOW	7/WEEK	24 HR TOTAL	FINAL EFFLUENT
009	PH (MINIMUM - MAXIMUM)	1/WEEK	GRAB	FINAL EFFLUENT

Facility Name: MIDAMERICAN ENERGY CENTER-NEAL # 1,2,3-NORTH

Permit Number: 9700102

Monitoring and Reporting Requirements

(a) Samples and measurements taken shall be representative of the volume and nature of the monitored wastewater.

(b) Analytical and sampling methods as specified in 40 CFR Part 136 or other methods approved in writing by the department, shall be utilized.

(c) Chapter 63 of the rules provides you with further explanation of your monitoring requirements.

(d) You are required to report all data including calculated results needed to determine compliance with the limitations contained in this permit. This includes daily maximums and minimums, 30-day averages and 7-day averages for all parameters that have concentration (mg/l) and mass (lbs/day) limits. Also, flow data shall be reported in million gallons per day (MGD).

(e) Results of all monitoring shall be recorded on forms provided by, or approved by, the department, and submitted to the department by the fifteenth day following the close of the reporting period. Your reporting period is on a monthly basis, ending on the last day of each month.

Outfall Number	Wastewater Parameter	Sample Frequency	Sample Type	Monitoring Location
009	ACUTE TOXICITY, CERIODAPHNIA	1/12 MONTHS	24 HR COMP	FINAL EFFLUENT
009	ACUTE TOXICITY, PIMEPHALES	1/12 MONTHS	24 HR COMP	FINAL EFFLUENT

Permit Number: 9700102 **Special Monitoring Requirements**

Outfall Number	Description
003	COPPER,TOTAL (AS CU) ONLY REQUIRED DURING MONTHS WHEN METAL CLEANING WASTE ARE PRODUCED.
003	IRON,TOTAL (AS FE) ONLY REQUIRED DURING MONTHS WHEN METAL CLEANING WASTES ARE PRODUCED.

Facility Name: MidAmerican Energy Company – Neal North Energy Center
Permit Number: 56-25-1-02
Outfall Number: 003

Ceriodaphnia and Pimephales Toxicity Effluent Testing

1. For facilities that have not been required to conduct toxicity testing by a previous NPDES permit, the annual toxicity test shall be conducted within three (3) months of permit issuance and at least annually thereafter. For facilities that have been required to conduct toxicity testing by a previous NPDES permit, the annual toxicity test shall be conducted within twelve months (12) of the last toxicity test.

2. The test organisms that are to be used for acute toxicity testing shall be *Ceriodaphnia dubia* and *Pimephales promelas.* The acute toxicity testing procedures used to demonstrate compliance with permit limits shall be those listed in 40 CFR Part 136 and adopted by reference in rule 567--63.1(1). The method for measuring acute toxicity is specified in USEPA. 1993. Methods for Measuring the Acute Toxicity of Effluents to Freshwater and Marine Organisms. Fourth Edition. Environmental Monitoring Systems Laboratory, U.S. Environmental Protection Agency, Cincinnati, Ohio August 1993, EPA/600/4-90/027F.

3. The diluted effluent sample must contain a minimum of 8.4% effluent and no more than 91.6% of culture water respectively.

4. One valid positive toxicity result will require quarterly testing for effluent toxicity.

5. Two successive valid positive toxicity results or three positive results out of five successive valid effluent toxicity tests will require a toxic reduction evaluation to be completed to eliminate the toxicity.

6. A non-toxic test result shall be indicated as a **"1"** on the monthly operation report. A toxic test result shall be indicated as a **"2"** on the monthly operation report. DNR Form 542-1381 shall also be submitted to the DNR field office along with the monthly operation report.

Ceriodaphnia and Pimephales Toxicity Effluent Limits

The 30 day average mass limit of **"1"** for the parameters Acute Toxicity, Ceriodaphnia and Acute Toxicity, Pimephales means no positive toxicity results.

DEFINITION

"Positive toxicity result" means a statistical difference of mortality rate between the control and the diluted effluent sample. For more information see USEPA. 1993. Methods for Measuring the Acute Toxicity of Effluents to Freshwater and Marine Organisms. Fourth Edition. Environmental Monitoring Systems Laboratory, U.S. Environmental Protection Agency, Cincinnati, Ohio August 1993, EPA/600/4-90/027F.

Facility Name: MIDAMERICAN ENERGY COMPANY-NEAL # 1,2,3-NORTH

Permit Number: 9700102

Monitoring and Reporting Requirements

(a) Samples and measurements taken shall be representative of the volume and nature of the monitored wastewater.

(b) Analytical and sampling methods as specified in 40 CFR Part 136 or other methods approved in writing by the department, shall be utilized.

(c) Chapter 63 of the rules provides you with further explanation of your monitoring requirements.

(d) You are required to report all data including calculated results needed to determine compliance with the limitations contained in this permit. This includes daily maximums and minimums, 30-day averages and 7-day averages for all parameters that have concentration (mg/1) and mass (lbs/day) limits. Also, flow data shall be reported in million gallons per day (MGD).

(e) Results of all monitoring shall be recorded on forms provided by the department, and submitted to the department by the fifteenth day following the close of the reporting period. Your reporting period is on a monthly basis, ending on the last day of each month.

Outfall Number	Wastewater Parameter	Sample Frequency	Sample Type	Monitoring Location
001	FLOW	7/WEEK	24 HR TOTAL	FINAL EFFLUENT
001	PH (MINIMUM - MAXIMUM)	1/WEEK	GRAB	FINAL EFFLUENT
002	FLOW	1/WEEK	24 HR TOTAL	FINAL EFFLUENT
002	TOTAL SUSPENDED SOLIDS	1/MONTH	GRAB	FINAL EFFLUENT
002	PH (MINIMUM - MAXIMUM)	1/MONTH	GRAB	FINAL EFFLUENT
002	OIL AND GREASE	1/MONTH	GRAB	FINAL EFFLUENT
002	TOTAL SUSPENDED SOLIDS	1/MONTH	GRAB	INTAKE FROM STREAM
002	OIL AND GREASE	1/MONTH	GRAB	INTAKE FROM STREAM
002	TOTAL SUSPENDED SOLIDS	1/MONTH	CALCULATED	FINAL EFFLUENT (NET ADDITION)
002	OIL AND GREASE	1/MONTH	CALCULATED	FINAL EFFLUENT (NET ADDITION)
003	FLOW	1/WEEK	24 HR TOTAL	FINAL EFFLUENT
003	TOTAL SUSPENDED SOLIDS	1/MONTH	GRAB	FINAL EFFLUENT
003	PH (MINIMUM - MAXIMUM)	1/MONTH	GRAB	FINAL EFFLUENT
003	COPPER,TOTAL (AS CU)	1/WEEK	GRAB	FINAL EFFLUENT
003	IRON,TOTAL (AS FE)	1/WEEK	GRAB	FINAL EFFLUENT
003	OIL AND GREASE	1/MONTH	GRAB	FINAL EFFLUENT
003	ACUTE TOXICITY, CERIODAPHNIA	1/12 MONTHS	24 HR COMP	FINAL EFFLUENT
003	ACUTE TOXICITY, PIMEPHALES	1/12 MONTHS	24 HR COMP	FINAL EFFLUENT
003	TOTAL SUSPENDED SOLIDS	1/MONTH	GRAB	INTAKE FROM STREAM
003	COPPER,TOTAL (AS CU)	1/WEEK	GRAB	INTAKE FROM STREAM
003	IRON,TOTAL (AS FE)	1/WEEK	GRAB	INTAKE FROM STREAM

Facility Name: MIDAMERICAN ENERGY COMPANY-NEAL # 1,2,3-NORTH

Permit Number: 9700102

Monitoring and Reporting Requirements

(a) Samples and measurements taken shall be representative of the volume and nature of the monitored wastewater.

(b) Analytical and sampling methods as specified in 40 CFR Part 136 or other methods approved in writing by the department, shall be utilized.

(c) Chapter 63 of the rules provides you with further explanation of your monitoring requirements.

(d) You are required to report all data including calculated results needed to determine compliance with the limitations contained in this permit. This includes daily maximums and minimums, 30-day averages and 7-day averages for all parameters that have concentration (mg/l) and mass (lbs/day) limits. Also, flow data shall be reported in million gallons per day (MGD).

(e) Results of all monitoring shall be recorded on forms provided by the department, and submitted to the department by the fifteenth day following the close of the reporting period. Your reporting period is on a monthly basis, ending on the last day of each month.

Outfall Number	Wastewater Parameter	Sample Frequency	Sample Type	Monitoring Location
003	OIL AND GREASE	1/MONTH	GRAB	INTAKE FROM STREAM
003	TOTAL SUSPENDED SOLIDS	1/MONTH	CALCULATED	FINAL EFFLUENT (NET ADDITION)
003	COPPER,TOTAL (AS CU)	1/WEEK	MEASUREMENT	FINAL EFFLUENT (NET ADDITION)
003	IRON,TOTAL (AS FE)	1/WEEK	MEASUREMENT	FINAL EFFLUENT (NET ADDITION)
003	OIL AND GREASE	1/MONTH	CALCULATED	FINAL EFFLUENT (NET ADDITION)
006	FLOW	1/WEEK	24 HR TOTAL	FINAL EFFLUENT
006	TOTAL SUSPENDED SOLIDS	1/MONTH	GRAB	FINAL EFFLUENT
006	PH (MINIMUM - MAXIMUM)	1/MONTH	GRAB	FINAL EFFLUENT
006	OIL AND GREASE	1/MONTH	GRAB	FINAL EFFLUENT
006	TOTAL SUSPENDED SOLIDS	1/MONTH	GRAB	INTAKE FROM STREAM
006	OIL AND GREASE	1/MONTH	GRAB	INTAKE FROM STREAM
006	TOTAL SUSPENDED SOLIDS	1/MONTH	CALCULATED	FINAL EFFLUENT (NET ADDITION)
006	OIL AND GREASE	1/MONTH	CALCULATED	FINAL EFFLUENT (NET ADDITION)
008	FLOW	1/WEEK	24 HR TOTAL	FINAL EFFLUENT
008	TOTAL SUSPENDED SOLIDS	1/MONTH	GRAB	FINAL EFFLUENT
008	PH (MINIMUM - MAXIMUM)	1/MONTH	GRAB	FINAL EFFLUENT
008	OIL AND GREASE	1/MONTH	GRAB	FINAL EFFLUENT
008	TOTAL SUSPENDED SOLIDS	1/MONTH	GRAB	INTAKE FROM STREAM
008	OIL AND GREASE	1/MONTH	GRAB	INTAKE FROM STREAM
008	TOTAL SUSPENDED SOLIDS	1/MONTH	CALCULATED	FINAL EFFLUENT (NET ADDITION)
008	OIL AND GREASE	1/MONTH	CALCULATED	FINAL EFFLUENT (NET ADDITION)

Facility Name: MIDAMERICAN ENERGY COMPANY-NEAL # 1,2,3-NORTH

Permit Number: 9700102

Monitoring and Reporting Requirements

(a) Samples and measurements taken shall be representative of the volume and nature of the monitored wastewater.

(b) Analytical and sampling methods as specified in 40 CFR Part 136 or other methods approved in writing by the department, shall be utilized.

(c) Chapter 63 of the rules provides you with further explanation of your monitoring requirements.

(d) You are required to report all data including calculated results needed to determine compliance with the limitations contained in this permit. This includes daily maximums and minimums, 30-day averages and 7-day averages for all parameters that have concentration (mg/l) and mass (lbs/day) limits. Also, flow data shall be reported in million gallons per day (MGD).

(e) Results of all monitoring shall be recorded on forms provided by the department, and submitted to the department by the fifteenth day following the close of the reporting period. Your reporting period is on a monthly basis, ending on the last day of each month.

Outfall Number	Wastewater Parameter	Sample Frequency	Sample Type	Monitoring Location
009	FLOW	7/WEEK	24 HR TOTAL	FINAL EFFLUENT
009	PH (MINIMUM - MAXIMUM)	1/WEEK	GRAB	FINAL EFFLUENT
009	ACUTE TOXICITY, CERIODAPHNIA	1/12 MONTHS	24 HR-COMP	FINAL EFFLUENT
009	ACUTE TOXICITY, PIMEPHALES	1/12 MONTHS	24 HR COMP	FINAL EFFLUENT
011	FLOW	1/WEEK	24 HR TOTAL	FINAL EFFLUENT
011	TOTAL SUSPENDED SOLIDS	1/MONTH	GRAB	FINAL EFFLUENT
011	PH (MINIMUM - MAXIMUM)	1/MONTH	GRAB	FINAL EFFLUENT
011	OIL AND GREASE	1/MONTH	GRAB	FINAL EFFLUENT
011	TOTAL SUSPENDED SOLIDS	1/MONTH	GRAB	INTAKE FROM STREAM
011	OIL AND GREASE	1/MONTH	GRAB	INTAKE FROM STREAM
011	TOTAL SUSPENDED SOLIDS	1/MONTH	CALCULATED	FINAL EFFLUENT (NET ADDITION)
011	OIL AND GREASE	1/MONTH	CALCULATED	FINAL EFFLUENT (NET ADDITION)

Facility Name: MIDAMERICAN ENERGY COMPANY-NEAL # 1,2,3-NORTH

Permit Number: 9700102 **Special Monitoring Requirements**

Outfall Number	Description
003	COPPER,TOTAL (AS CU) ONLY REQUIRED DURING MONTHS WHEN METAL CLEANING WASTE ARE PRODUCED.
003	IRON,TOTAL (AS FE) ONLY REQUIRED DURING MONTHS WHEN METAL CLEANING WASTES ARE PRODUCED.

Facility Name: MidAmerican Energy Company (Neal 1,2,3)
Facility Number: 97-00-1-02
Outfall #: 002, 003, 006, 008, & 011

NON - STANDARD LIMITS
NET ADDITION CALCULATION

DESCRIPTION

Total Suspended Solids, Oil & Grease, Iron and Copper

Effluent limitations shall apply on a net addition basis. Effluent limitations shall be calculated on the basis of pollutants present after any treatment steps have been performed on the intake water. Only water withdrawn from and returned to Missouri River may be used in these calculations.

Facility Name: MidAmerican Energy Company - Neal 1, 2, 3 North
Permit Number: 56-25-1-06
Outfall Number: 003

Ceriodaphnia and Pimephales Toxicity Effluent Testing

1. For facilities that have not been required to conduct toxicity testing by a previous NPDES permit, the annual toxicity test shall be conducted within three (3) months of permit issuance and at least annually thereafter. For facilities that have been required to conduct toxicity testing by a previous NPDES permit, the annual toxicity test shall be conducted within twelve months (12) of the last toxicity test.

2. The test organisms that are to be used for acute toxicity testing shall be *Ceriodaphnia dubia* and *Pimephales promelas*. The acute toxicity testing procedures used to demonstrate compliance with permit limits shall be those listed in 40 CFR Part 136 and adopted by reference in rule 567--63.1(1). The method for measuring acute toxicity is specified in USEPA. 1993. Methods for Measuring the Acute Toxicity of Effluents to Freshwater and Marine Organisms. Fourth Edition. Environmental Monitoring Systems Laboratory, U.S. Environmental Protection Agency, Cincinnati, Ohio August 1993, EPA/600/4-90/027F.

3. **The diluted effluent sample must contain a minimum of 1.6 % effluent and no more than 98.4 % of culture water.**

4. *One valid positive toxicity result will require quarterly testing for effluent toxicity.*

5. Two successive valid positive toxicity results or three positive results out of five successive valid effluent toxicity tests will require a toxic reduction evaluation to be completed to eliminate the toxicity.

6. A non-toxic test result shall be indicated as a "1" on the monthly operation report. A toxic test result shall be indicated as a "2" on the monthly operation report. DNR Form 542-1381 shall also be submitted to the DNR field office along with the monthly operation report.

Ceriodaphnia and Pimephales Toxicity Effluent Limits

The 30 day average mass limit of "1" for the parameters Acute Toxicity, Ceriodaphnia and Acute Toxicity, Pimephales means no positive toxicity results.

DEFINITION

"Positive toxicity result" means a statistical difference of mortality rate between the control and the diluted effluent sample. For more information see USEPA. 1993. Methods for Measuring the Acute Toxicity of Effluents to Freshwater and Marine Organisms. Fourth Edition. Environmental Monitoring Systems Laboratory, U.S. Environmental Protection Agency, Cincinnati, Ohio August 1993, EPA/600/4-90/027F.

Facility Name: MidAmerican Energy Company - Neal 1, 2, 3 North
Permit Number: 56-25-1-06
Outfall Number: 009

Ceriodaphnia and Pimephales Toxicity Effluent Testing

1. For facilities that have not been required to conduct toxicity testing by a previous NPDES permit, the annual toxicity test shall be conducted within three (3) months of permit issuance and at least annually thereafter. For facilities that have been required to conduct toxicity testing by a previous NPDES permit, the annual toxicity test shall be conducted within twelve months (12) of the last toxicity test.

2. The test organisms that are to be used for acute toxicity testing shall be *Ceriodaphnia dubia* and *Pimephales promelas*. The acute toxicity testing procedures used to demonstrate compliance with permit limits shall be those listed in 40 CFR Part 136 and adopted by reference in rule 567--63.1(1). The method for measuring acute toxicity is specified in USEPA. 1993. Methods for Measuring the Acute Toxicity of Effluents to Freshwater and Marine Organisms. Fourth Edition. Environmental Monitoring Systems Laboratory, U.S. Environmental Protection Agency, Cincinnati, Ohio August 1993, EPA/600/4-90/027F.

3. **The diluted effluent sample must contain a minimum of 86.5 % effluent and no more than 13.5 % of culture water.**

4. One valid positive toxicity result will require quarterly testing for effluent toxicity.

5. Two successive valid positive toxicity results or three positive results out of five successive valid effluent toxicity tests will require a toxic reduction evaluation to be completed to eliminate the toxicity.

6. A non-toxic test result shall be indicated as a "1" on the monthly operation report. A toxic test result shall be indicated as a "2" on the monthly operation report. DNR Form 542-1381 shall also be submitted to the DNR field office along with the monthly operation report.

Ceriodaphnia and Pimephales Toxicity Effluent Limits

The 30 day average mass limit of "1" for the parameters Acute Toxicity, Ceriodaphnia and Acute Toxicity, Pimephales means no positive toxicity results.

DEFINITION

"Positive toxicity result" means a statistical difference of mortality rate between the control and the diluted effluent sample. For more information see USEPA. 1993. Methods for Measuring the Acute Toxicity of Effluents to Freshwater and Marine Organisms. Fourth Edition. Environmental Monitoring Systems Laboratory, U.S. Environmental Protection Agency, Cincinnati, Ohio August 1993, EPA/600/4-90/027F.

STORM WATER DISCHARGES COVERED UNDER THIS PERMIT

PART I. DESCRIPTION OF STORM WATER DISCHARGES

A. DISCHARGES COVERED UNDER THIS PERMIT

This permit authorizes the discharge of storm associated with industrial activity from each outfall identified on page 2 as containing storm water associated with industrial activity.

B. STORM WATER DISCHARGE NOT ASSOCIATED WITH INDUSTRIAL ACTIVITY

Storm water discharge associated with industrial activity (as defined in chapter 567-60 of the Iowa Administrative Code) authorized by this permit may be combined with other sources of storm water that are not classified as associated with industrial activity pursuant to 40 CFR 122.26(b)(14) or with wastewater from outfalls defined elsewhere in this permit.

C. LIMITATION ON COVERAGE

Unless specifically identified elsewhere in this permit, the following discharges are not authorized by this permit:

- non-storm water discharges except those listed elsewhere in this permit,
- the discharge of substances resulting from an on-site spill;
- storm water discharge associated with industrial activity from construction activity, specifically any land disturbing activity of five or more acres;
- washwaters from material handling and processing areas,
- washwaters from drum, tank, or container rinsing and cleaning, and
- vehicle and equipment washwaters.

D. NON-STORM WATER DISCHARGES

The following non-storm water discharges may be authorized by this permit provided the non-storm water component of the discharge is in compliance with the conditions listed in the storm water portion of this permit:

discharges from fire fighting activities, fire hydrant flushing, potable water sources including waterline flushing, drinking fountain water, uncontaminated compressor condensate, irrigation drainage, lawn watering, routine external building washdown that does not use detergents or other compounds, pavement washwaters where spills or leaks of toxic or hazardous materials have not occurred (unless all spilled material has been removed) and where detergents are not used, air conditioning condensate, uncontaminated springs, uncontaminated ground water, and foundation or footing drains where flows are not contaminated with process materials such as solvents.

PART II. SPECIAL CONDITIONS

ADDITIONAL REQUIREMENTS FOR FACILITIES WITH SALT STORAGE

Storage piles of salt used for deicing or other commercial or industrial purposes and that generate a storm water discharge to waters of the United States shall be enclosed or covered to prevent exposure to precipitation, except for exposure resulting from adding or removing materials from the pile.

PART III. STORM WATER POLLUTION PREVENTION PLAN

The storm water pollution prevention plan as described and required in the permit previously issued to this facility must continue to be implemented. The plan must identify potential sources of pollution that may reasonably be expected to affect the quality of storm water discharge associated with industrial activity from the facility. In

addition, the plan must describe and ensure the implementation of practices that are used to reduce the pollutants in storm water discharge associated with industrial activity at the facility and to ensure compliance with the terms and conditions of this permit. The permittee must continue to implement the provisions of the storm water pollution prevention plan required under the previous permit.

The plan shall be amended whenever there is a change in design, construction, operation, or maintenance, that has a significant effect on the potential for the discharge of pollutants to the waters of the United States or if the storm water pollution prevention plan proves to be ineffective in eliminating or significantly minimizing the discharge of pollutants or in otherwise achieving the general objectives of controlling pollutants in storm water discharges associated with industrial activity. New owners shall review the existing plan and make appropriate changes.

The storm water pollution prevention plan required by this permit must be modified within 14 calendar days of the occurrence of any "hazardous condition" to provide a description of the release, the circumstances leading to the release, and the date of the release. In addition, the plan must be reviewed by the permittee to identify measures to prevent the reoccurrence of such a condition and to respond to such discharges, and the plan must be modified where appropriate.

PART VI. DEFINITIONS

1. Storm water means storm water runoff, snow melt runoff, and surface runoff and drainage.
2. Waters of the United States means all waters that are currently used, were used in the past, or may be susceptible to use in interstate or foreign commerce, including all waters that are subject to the ebb and flow of the tide;

a. All interstate waters, including interstate wetlands;

b. All other waters such as interstate lakes, rivers, streams (including intermittent streams), mudflats, sandflats, wetlands, sloughs, prairie potholes, wet meadows, playa lakes, or natural ponds the use, degradation, or destruction of which would affect or could affect interstate or foreign commerce including any such waters:

c. That are or could be used by interstate or foreign travelers for recreational or other purposes;

d. From which fish or shellfish are or could be taken and sold in interstate or foreign commerce; or

e. That are used or could be used for industrial purposes by industries in interstate commerce;

f. All impoundment of waters otherwise defined as waters of the United States under this definition;

g. Tributaries of waters identified in paragraphs (a) through (d) of this definition;

h. The territorial sea; and

i. Wetlands adjacent to waters (other than waters that are themselves wetlands) identified in paragraphs (a) through (f) of this definition,

QUARTERLY VISUAL EXAMINATION OF STORM WATER QUALITY.

The permittee shall perform and document a quarterly, visual examination of storm water discharge associated with industrial activity from outfall # 003, except discharges exempted below. The examination must be made at least once in each of the following periods: January through March; April through June; July through September; and October through December during daylight hours unless there is insufficient rainfall or snow melt to produce a runoff event. Each examination shall be made a minimum of 30 days from the last examination at the same outfall.

Examinations shall be made within the first 30 minutes (or as soon thereafter as practical, but not to exceed 1 hour) of when the runoff or snowmelt begins discharging. The examinations shall document observations of color, odor, clarity, floating solids, settled solids, suspended solids, foam, oil sheen, and other obvious indicators of storm water pollution. The examination must be conducted in a well-lit area. No analytical tests are required to be performed. All examinations shall be made of the discharge resulting from a storm event that is greater than 0.1 inches in magnitude and that occurs at least 72 hours from the previously measurable (greater than 0.1 inch rainfall) storm event. Where practicable, the same individual should carry out the examination of discharges for the entire permit term.

Visual examination reports must be maintained on-site in the pollution prevention plan. Do not submit the results of the visual observations to the Department unless they have been requested. The report shall include the examination date and time, examination personnel, the nature of the discharge (i.e., runoff or snow melt), visual quality of the storm water discharge (including observations of color, odor, clarity, floating solids, settled solids, suspended solids, foam, oil sheen, and other obvious indicators of storm water pollution), and probable sources of any observed storm water contamination.

If the permittee has two or more outfalls that, based on a consideration of industrial activity, significant materials, and management practices and activities within the area drained by the outfall, the permittee reasonably believes discharge substantially identical effluents, the permittee may conduct an examination of effluent from one of such outfalls and report that the observations also apply to the substantially identical outfall(s). The permittee must then include in the storm water pollution prevention plan a description of the location of the outfalls and explain in detail why the outfalls are expected to discharge substantially identical effluents. In addition, for each outfall that the permittee believes is representative, an estimate of the size of the drainage area (in square feet) and an estimate of the runoff coefficient of the drainage area [e.g., low (under 40 percent), medium (40 to 65 percent), or high (above 65 percent)] shall be provided in the plan.

STANDARD CONDITIONS

1. **DEFINITIONS**

(a) 7 day average means the sum of the total daily discharges by mass, volume or concentration during a 7 consecutive day period, divided by the total number of days during the period that measurements were made. Four 7 consecutive day periods shall be used each month to calculate the 7-day average. The first 7-day period shall begin with the first day of the month.

(b) 30 day average means the sum of the total daily discharges by mass, volume or concentration during a calendar month, divided by the total number of days during the month that measurements were made.

(c) daily maximum means the total discharge by mass, volume or concentration during a twenty-four hour period.

2. **DUTY TO COMPLY**

You must comply with all conditions of this permit. Any permit noncompliance constitutes a violation of the Clean Water Act and is grounds for enforcement action; permit termination, revocation and reissuance, or modification; or denial of a permit renewal application. Issuance of this permit does not relieve you of the responsibility to comply with all local, state and federal laws, ordinances, regulations or other legal requirements applying to the operation of your facility.
{See 40 CFR 122.41(a) and 567-64.3(11) IAC}

3. **DUTY TO REAPPLY**

If you wish to continue to discharge after the expiration date of this permit you must file an application for reissuance at least 180 days prior to the expiration date of this permit.
{See 567-64.8(1) IAC}

4. **NEED TO HALT OR REDUCE ACTIVITY**

It shall not be a defense for a permittee in an enforcement action that it would have been necessary to halt or reduce the permitted activity in order to maintain compliance with the conditions of this permit.
{See 567-64.7(5)(j) IAC}

5. **DUTY TO MITIGATE**

You shall take all reasonable steps to minimize or prevent any discharge in violation of this permit which has a reasonable likelihood of adversely affecting human health or the environment.
{See 567-64.7(5)(i) IAC}

6. **PROPERTY RIGHTS**

This permit does not convey any property rights of any sort or any exclusive privileges.

7. **TRANSFER OF TITLE**

If title to your facility, or any part of it, is transferred the new owner shall be subject to this permit.
{See 567-64.14 IAC}

You are required to notify the new owner of the requirements of this permit in writing prior to any transfer of title. The Director shall be notified in writing within 30 days of the transfer

8. **PROPER OPERATION AND MAINTENANCE**

All facilities and control systems shall be operated as efficiently as possible and maintained in good working order. A sufficient number of staff, adequately trained and knowledgeable in the operation of your facility shall be retained at all times and adequate laboratory controls and appropriate quality assurance procedures shall be provided to maintain compliance with the conditions of this permit.
{See 40 CFR 122.41(e) and 567 64.7(5)(f) IAC}

9. **DUTY TO PROVIDE INFORMATION**

You must furnish to the Director, within a reasonable time, any information the Director may request to determine whether cause exists for modifying, revoking and reissuing, or terminating this permit or to determine compliance with this permit. You must also furnish to the Director, upon request, copies of any records required to be kept by this permit.

10. **MAINTENANCE OF RECORDS**

You are required to maintain records of your operation in accordance with 567-63.2 IAC.

11. **PERMIT MODIFICATION, SUSPENSION OR REVOCATION**

(a) This permit may be modified, suspended, or revoked and reissued for cause including but not limited to those specified in 567-64.3(11) IAC.

(b) This permit may be modified due to conditions or information on which this permit is based, including any new standard the department may adopt that would change the required effluent limits.
{See 567-64.3(11)© IAC}

(c) If a toxic pollutant is present in your discharge and more stringent standards for toxic pollutants are established under Section 307(a) of the Clean Water Act, this permit will be modified in accordance with the new standards.
{See 567-64.7(5)(g) IAC}

The filing of a request for a permit modification, revocation or suspension, or a notification of planned changes or anticipated noncompliance does not stay any permit condition.

12. **SEVERABILITY**

The provisions of this permit are severable and if any provision or application of any provision to any circumstance is found to be invalid by this department or a court of law, the application of such provision to other circumstances, and the remainder of this permit, shall not be affected by such finding.

STANDARD CONDITIONS

13. INSPECTION OF PREMISES, RECORDS, EQUIPMENT, METHODS AND DISCHARGES

You are required to permit authorized personnel to:

(a) Enter upon the premises where a regulated facility or activity is located or conducted or where records are kept under conditions of this permit.

(b) Have access to and copy, at reasonable times, any records that must be kept under the conditions of this permit.

(c) Inspect, at reasonable times, any facilities, equipment, practices or operations regulated or required under this permit.

(d) Sample or monitor, at reasonable times, for the purpose of assuring compliance or as otherwise authorized by the Clean Water Act.

14. TWENTY-FOUR HOUR REPORTING

You shall report any noncompliance that may endanger human health or the environment. Information shall be provided orally within 24 hours from the time you become aware of the circumstances. A written submission that includes a description of noncompliance and its cause; the period of noncompliance including exact dates and times, whether the noncompliance has been corrected or the anticipated time it is expected to continue; and the steps taken or planned to reduce, eliminate, and prevent a reoccurrence of the noncompliance must be provided within 5 days of the occurrence. The following instances of noncompliance must be reported within 24 hours of occurrence:

(a) Any unanticipated bypass which exceeds any effluent limitation in the permit.
{See 40 CFR 122.44(g)}

(b) Any upset which exceeds any effluent limitation in the permit.
{See 40 CFR 122.44(n)}

(c) Any violation of a maximum daily discharge limit for any of the pollutants listed by the Director in the permit to be reported within 24 hours.
{See 40 CFR 122.44(g)}

15. OTHER NONCOMPLIANCE

You shall report all instances of noncompliance not reported under Condition #14 at the time monitoring reports are submitted.

16. ADMINISTRATIVE RULES

Rules of this Department which govern the operation of your facility in connection with this permit are published in Part 567 of the Iowa Administrative Code (IAC) in Chapters 60-64 and 120-122. Reference to the term "rule" in this permit means the designated provision of Part 567 of the Iowa Administrative Code.

17. NOTICE OF CHANGED CONDITIONS

You are required to report any changes in existing conditions or information on which this permit is based:

(a) Facility expansions, production increases or process modifications which may result in new or increased discharges of pollutants must be reported to the Director in advance. If such discharges will exceed effluent limitations, your report must include an application for a new permit.
{See 567-64.7(5)(a) IAC}

(b) If any modification of, addition to, or construction of a disposal system is to be made, you must first obtain a written permit from this Department.
{See 567-64.2 IAC}

(c) If your facility is a publicly owned treatment works or otherwise may accept waste for treatment from industrial contributors see 567-64.3(5) IAC for further notice requirements.

(d) You shall notify the Director as soon as you know or have reason to believe that any activity has occurred or will occur which would result in the discharge of any toxic pollutant which is not limited in this permit.
{See 40 CFR 122.42(a)}

You must also notify the Director if you have begun or will begin to use or manufacture as an intermediate or final product or byproduct any toxic pollutant which was not reported in the permit application

18. OTHER INFORMATION

Where you become aware that you failed to submit any relevant facts in a permit application, or submitted incorrect information in a permit application or in any report, you must promptly submit such facts or information.

STANDARD CONDITIONS

19. UPSET PROVISION

(a) Definition - "Upset" means an exceptional incident in which there is unintentional and temporary noncompliance with technology based permit effluent limitations because of factors beyond the reasonable control of the permittee. An upset does not include noncompliance to the extent caused by operational error, improperly designed treatment facilities, inadequate treatment facilities, lack of preventive maintenance, or careless or improper operation.

(b) Effect of an upset. An upset constitutes an affirmative defense in an action brought for noncompliance with such technology based permit effluent limitations if the requirements of paragraph *"c"* of this condition are met. No determination made during administrative review of claims that noncompliance was caused by upset, and before an action for noncompliance, is final administrative action subject to judicial review.

(c) Conditions necessary for demonstration of an upset. A permittee who wishes to establish the affirmative defense of upset shall demonstrate through properly signed, contemporaneous operating logs, or other relevant evidence that;

(1) An upset occurred and that the permittee can identify the cause(s) of the upset.
(2) The permitted facility was at the time being properly operated; and
(3) The permittee submitted notice of the upset to the Department in accordance with 40 CFR 122.41(l)(6)(ii)(B).
(4) The permittee complied with any remedial measures required by Item #5 of the Standard Conditions of this permit.

(d) Burden of Proof. In any enforcement proceeding, the permittee seeking to establish the occurrence of an upset has the burden of proof.

20. FAILURE TO SUBMIT FEES

This permit may be revoked, in whole or in part, if the appropriate permit fees are not submitted within thirty (30) days of the date of notification that such fees are due.

21. BYPASSES

(a) Definition - Bypass means the intentional diversion of waste streams from any portion of a treatment facility.

(b) Prohibition of bypass, Bypass is prohibited and the department may take enforcement action against a permittee for bypass unless:

(1) Bypass was unavoidable to prevent loss of life, personal injury, or severe property damage;

(2) There were no feasible alternatives to the bypass, such as the use of auxiliary treatment facilities, retention of untreated wastes, or maintenance during normal periods of equipment downtime. This condition is not satisfied if adequate backup equipment should have been installed in the exercise of reasonable engineering judgement to prevent a bypass which occurred during normal periods of equipment downtime or preventive maintenance;

(3) The permittee submitted notices as required by paragraph *"d"* of this section.

(c) The Director may approve an anticipated bypass after considering its adverse effects if the Director determines that it will meet the three conditions listed above.

(d) Reporting bypasses. Bypasses shall be reported in accordance with 567-63.6 IAC.

22. SIGNATORY REQUIREMENTS

Applications, reports or other information submitted to the Department in connection with this permit must be signed and certified as required by 567-64.3(8) IAC.

23. USE OF CERTIFIED LABORATORIES

Effective October 1, 1996, analyses of wastewater, groundwater or sewage sludge that are required to be submitted to the department as a result of this permit must be performed by a laboratory certified by the State of Iowa. Routine, on-site monitoring for pH, temperature, dissolved oxygen, total residual chlorine and other pollutants that must be analyzed immediately upon sample collection, settleable solids, physical measurements, and operational monitoring tests specified in 567-63.3(4) are excluded from this requirement.

APPENDIX D

REQUESTED INFORMATION

1) **Responses to request for missing or additional information**
2) **HWS Report Appendices D and H (Underseepage Analyses Results)**
3) **HWS Report Appendix H (Liquefaction analyses results)**
4) **Design drawings for outlet structure**
5) **Geotek Report of Soil Test Borings at Pond 1 outside slope ash berm**

APPENDIX D

1) **Responses to request for missing or additional information**

Neal North Energy Center Questions:

1. In the provided copy of the HWS Geotechnical Engineering Report several appendices are missing, including Appendices D, E, F and the liquefaction analyses that are indicated in the report text to be in Appendix H. Appendix D is not critical but we would like to receive the unconfined compression test reports in Appendix E, the triaxial shear test reports in Appendix F, and the Liquefaction analyses.

    a. The remaining report appendices are attached.

2. We would like to receive the design (or as-built) drawings for the relatively new outlet structure at the "polishing pond" (3B south).

    a. The design drawings for the outfall structure are attached.

3. In the field it was noted that there is a relatively massive berm of apparent ash material on the outside slope (river side) of the dike embankment for impoundment 1. We would like to receive information about this berm, including composition, purpose, and when it was placed.

    a. GeoTek Engineering and Testing Services was contracted to advance three soil test borings in the apparent expanded ash pond berm area. The borings were placed in what appeared to be the middle of the expanded berm and spaced equally along the north/south center line of the apparent expanded berm. All borings were advanced to a depth of 11 feet. Boring #1, toward the south, contained bottom ash and coal residuals in the top 4.5 feet. Boring #2, in the middle, contained bottom ash and coal residuals in the top 7 feet. Boring 3, toward the north, contained bottom ash and coal residuals to a depth of 11 feet. A copy of the test boring report is attached. Once permits are obtained from the Army Corp of Engineers and the Iowa Department of Natural Resources, MidAmerican Energy plans to remove the apparent berm extension and place the material inside impoundment number 1.

4. Impoundment 1 has no outlet. In case of record extreme and prolonged wet weather how is it assured that the water level in the impoundment will be maintained below the maximum 1078.5 feet recommended by HWS in order to maintain an acceptable factor of safety against seepage uplift and internal erosion of foundation soils? If portable pumps are used, where would the water be discharged?

    a. A fixed water elevation gauge will be installed inside the impoundment so that maintenance of the water level below 1078.5 can be verified visually. If the water level approaches the upper limit of 1078.5, portable pumps will be used to pump the water to the impoundment # 2 located directly east of impoundment

#1. That water will then flow to the east and eventually reach the NPDES permitted discharge structure.

5. What are the record high water levels in the impoundments (1, 2 & 3A, 3B north, and 3B south)?

    a. Prior to the completion of the Geotechnical Engineering Report, the ash pond levels routinely operated from 1080 to 1082. The original design drawings provided a discharge weir elevation of 1082.46 with the installation of all stop logs and the weir. The original installation included one less stop log resulting in an initial pond elevation at the discharge point of 1081.5. One additional stop log was removed shortly thereafter to provide more freeboard during automatic valve closure. The new operating elevation was 1080.5. After the study in 2009, two additional stop logs were removed resulting in a pond elevation of 1078.5. Recently two more stop logs were removed for winter operation lowering the pond elevation to 1076.5.

    There are no records of the record high levels in the ponds other than what is described as normal operating levels above.

APPENDIX D

2) HWS Report Appendices D and H (Underseepage Analyses Results)

APPENDIX D

[redacted]

TABLE D-1

Soil Classific Chart

Criteria for Assigning Group Symbols and Group Names Using Laboratory Tests[A]			Group	Soil Classification: Group Symbol	Soil Classification: Group Name[B]
Coarse-Grained Soils More than 50% retained on No. 200 sieve	Gravels More than 50% of coarse fraction retained on No. 4 sieve	Clean Gravels Less than 5% fines[C]	$Cu \geq 4$ and $1 \leq Cc \leq 3$[E]	GW	Well-graded gravel[F]
			$Cu < 4$ and/or $1 > Cc > 3$[E]	GP	Poorly graded gravel[F]
		Gravels with Fines More than 12% fines[C]	Fines classify as ML or MH	GM	Silty gravel[F,G,H]
			Fines classify as CL or CH	GC	Clayey gravel[F,G,H]
	Sands 50% or more of coarse fraction passes No. 4 sieve	Clean Sands Less than 5% fines[D]	$Cu \geq 6$ and $1 \leq Cc \leq 3$[E]	SW	Well-graded sand[1]
			$Cu < 6$ and/or $1 \geq Cc \geq 3$[E]	SP	Poorly graded sand[1]
		Sands with Fines More than 12% fines[D]	Fines classify as ML or MH	SM	Silty sand[G,H,I]
			Fines classify as CL or CH	SC	Clayey sand[G,H,I]
Fine-Grained Soils 50% or more passes the No. 200 sieve	Silts and Clays Liquid limit less than 50	inorganic	PI>7 and plots on or above "A" line[J]	CL	Lean clay[K,L,M]
			PI<4 or plots below "A" line[J]	ML	Silt[K,L,M]
		organic	Liquid limit - oven dried / Liquid limit - not dried <0.75	OL	Organic clay[K,L,M] Organic silt[K,L,M,O]
	Silts and Clays Liquid limit 50 or more	inorganic	PI plots on or above "A" line	CH	Fat clay[K,L,M]
			PI plots below "A" line	MH	Elastic silt[K,L,M]
		organic	Liquid limit - oven dried / Liquid limit - not dried <0.75	OH	Organic clay[K,L,M,P] Organic silt[K,L,M,Q]
Highly organic soils	Primarily organic matter, dark in color, and organic odor		PT	Peat	

[A] Based on the material passing the 3-in. (77-mm) sieve.
[B] If field sample contained cobbles or boulders, or both, add "with cobbles or boulders or both" to group name.
[C] Gravels with 5 to 12% fines require dual symbols:
GW-GM well-graded gravel with silt
GW-GC well-graded gravel with clay
GP-GM poorly graded with silt
GP-GC poorly graded gravel with clay
[D] Sands with 5 to 12% fines require dual symbols:
SW-SM well-graded sand with silt
SW-SC well-graded sand with clay
SP-SM poorly graded sand with silt
SP-SC poorly graded sand with clay

[E] $Cu = D_{60}/D_{10}$ $\quad Cc = \dfrac{(D_{30})^2}{D_{10} \times D_{60}}$

[F] If soil contains ≥15% sand, add "with sand" to group name.
[G] If fines classify as CL-ML, use dual symbol GC-GM or SC-SM.
[H] If fines are organic, add "with organic fines' to group name.
[I] If soil contains ≥ 15% gravel, add "with gravel" to group name.
[J] If Atterberg limits plot in hatched area, soil is a CL-ML, silty clay.

[K] If soil contains 15 to 29% plus No. 200, add "with sand" or "with gravel", whichever is predominant.
[L] If soil contains ≥30% plus No. 200, predominantly sand, add "sandy" to group name.
[M] If soil contains ≥30% plus No. 200, predominantly gravel, add "gravelly" to group name.
[N] PI ≥4 and plots on or above "A" line.
[O] PI <4 or plots below "A" line.
[P] PI plots on or above "A" line.
[Q] PI plots below "A" line.

TABLE D-2

CRITERIA FOR DESCRIBING MOISTURE CONDITION OF CLAY SOIL

Description	Criteria
Dry	Absence of moisture, dusty, dry to the touch.
Moist	Damp, slightly wet, moisture content below plastic limit.
Wet	Moisture content above the plastic limit.
Saturated	Very wet. Usually soil is below water table.

TABLE D-3

CRITERIA FOR DESCRIBING MOISTURE CONDITION OF GRANULAR SOIL

Description	Criteria
Dry	Absence of moisture, dry to the touch.
Moist	Damp but no visible free water.
Wet	Visible free water.
Saturated	Usually soil is below water table.

TABLE D-4

CRITERIA FOR DESCRIBING CONSISTENCY OF CLAY SOIL

Density	Penetration Resistance, N Blows per 12 in.
Very Soft	Less Than 2
Soft	2-4
Medium	4-8
Stiff	8-15
Very Stiff	15-30
Hard	Greater Than 30

TABLE D-5

CRITERIA FOR DESCRIBING DENSITY OF COARSE-GRAINED SOIL	
Density	**Penetration Resistance, N Blows per 12 in.**
Loose	Less Than 10
Medium	10-30
Dense	30-50
Very Dense	Greater Than 50

TABLE D-6

CRITERIA FOR DESCRIBING STRENGTH OF ROCK	
Description	**Criteria**
Very soft	Permits denting by moderate pressure of the fingers.
Soft	Resists denting by the fingers, but can be abraded and pierced to a shallow depth by a pencil point.
Moderately soft	Resists a pencil point, but can be scratched and cut with a knife blade.
Moderately hard	Resistant to abrasion or cutting by a knife blade, but can be easily dented or broken by light blows of a hammer.
Hard	Can be deformed or broken by repeated moderate hammer blows.
Very hard	Can be broken only by heavy, and in some rocks, repeated hammer blows.

TABLE D-7

ROCK QUALITY DESIGNATION (RQD)

This is a general method by which the quality of the rock at a site is obtained based on the relative amount of fracturing and alteration.

The Rock Quality Designation (RQD) is based on a modified core recovery procedure that, in turn, is based indirectly on the number of fractures (except those due directly to drilling operations) and the amount of softening or alteration in the rock mass as observed in the rock cores from a drill hole. Instead of counting the fractures, an indirect measure is obtained by summing the total length of core recovered by counting only those pieces of hard and sound core which are 4 inches or greater in length. The ratio of this modified core recovery length to the total core run length is known as the RQD.

An example is given below from a core run of 60 inches. For this particular case, the total core recovery is 50 inches yielding a core recovery of 83 percent. On the modified basis, only 38 inches are counted the RQD is 63 percent.

CORE RECOVERY, in.	MODIFIED CORE RECOVERY, in.
10	10
2	
2	
3	
4	4
5	5
3	
4	4
6	6
4	4
2	
5	5
---	---
50	38

% Core Recovery = 50/60 = 83%; RQD = 38/60 = 63%

A general description of the rock quality can be made for the RQD Value.

RQD (ROCK QUALITY DESIGNATION)	DESCRIPTION OF ROCK QUALITY
0 – 25	very poor
25 – 50	poor
50 – 75	fair
75 – 90	good
90 – 100	excellent

APPENDIX E

[redacted]

HWS
Solutions Through Service

LINCOLN OFFICE
825 "J" Street
P.O. Box 80358
Lincoln, Nebraska
(402) 479-2200

UNCONFINED - COMPRESSION TEST

ASTM Designation: D 2166

Project	**MidAmerican Energy Flyash Containment Assessment**				
Job No.	**52-69-5092**	Boring No.	**B-1**	Depth	**4.7'-5.3'**
Sample No.	**T-1**	Lab No.	**26049**	Classification	**ML**
Type of Specimen	**3" Tube**			Humidity During Trimming	**50%**
Remarks					

MOISTURE	
Container Number	1167
Total Wet Wt. (g)	204.0
Total Dry Wt. (g)	178.6
Container Wt. (g)	38.3
Water Content (%)	18.1
Saturation (%)	68.1

Specimen Diameter (in)	2.870
Initial Length (in)	5.969
Wet Wt. of Specimen (g)	1174.7
End Area (in^2)	6.47
Volume (in^3)	38.61
Wet Unit Wt. (lbs/ft^3)	115.9
Dry Unit Wt. (lbs/ft^3)	98.1
Length/Diameter	2.1

	(lbs/in^2)	($tons/ft^2$)		
Uncon. Compressive Strength =	**7.6**	**0.5**	**Strain at failure =**	**1.8%**
Shear Strength =	**3.8**	**0.3**	**Avg. Strain Rate (%/min) =**	**1.0%**

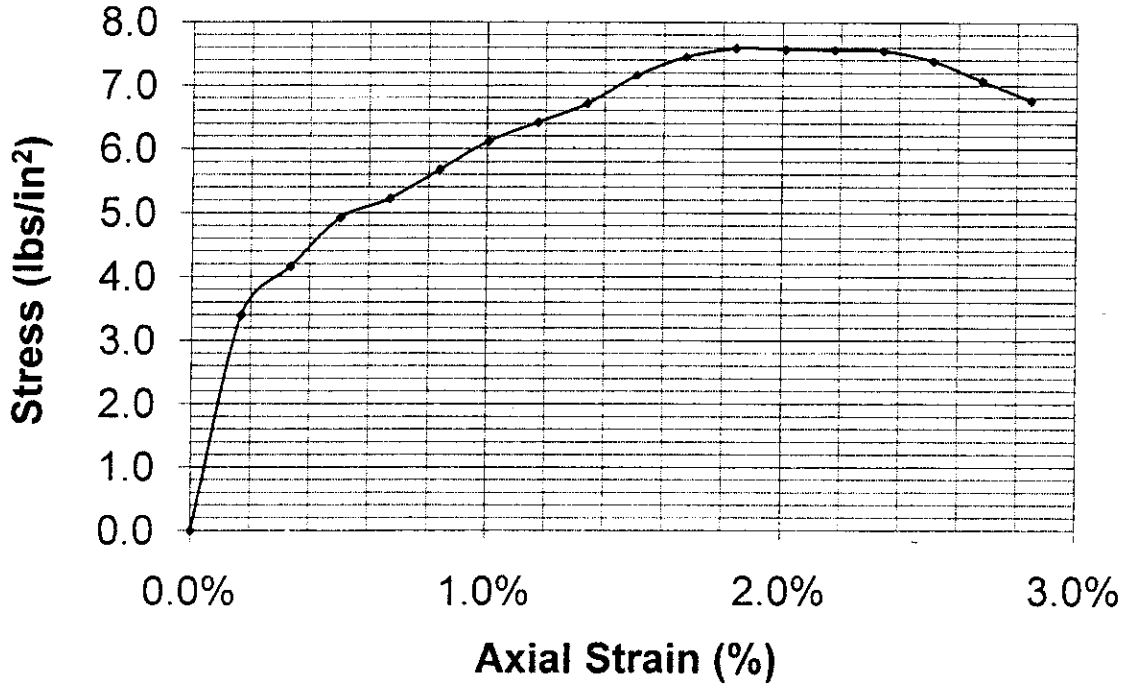

Figure E-1

HWS
Solutions Through Service

LINCOLN OFFICE
825 "J" Street
P.O. Box 80358
Lincoln, Nebraska
(402) 479-2200

UNCONFINED - COMPRESSION TEST

ASTM Designation: D 2166-98a

Project	**MidAmerican Energy Fly Ash Containment Assessment**				
Job No.	**52-69-5092**	Boring No.	**B-9a**	Depth	**3.0'-3.5'**
Sample No.	**T-1**	Lab No.	**26086**	Classification	**CL**
Type of Specimen	**1.4" Remolded**			Humidity During Trimming	**50%**
Remarks					

MOISTURE	
Container Number	1175
Total Wet Wt. (g)	180.8
Total Dry Wt. (g)	157.6
Container Wt. (g)	38.6
Water Content (%)	19.5
Saturation (%)	80.4

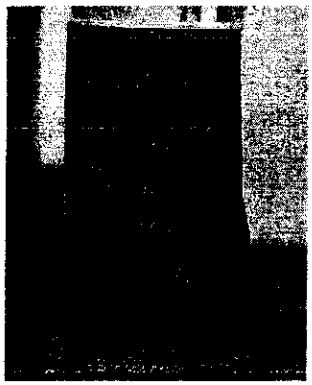

Specimen Diameter (in)	1.409
Initial Length (in)	2.927
Wet Wt. of Specimen (g)	145.8
End Area (in^2)	1.56
Volume (in^3)	4.56
Wet Unit Wt. (lbs/ft^3)	121.7
Dry Unit Wt. (lbs/ft^3)	101.8
Length/Diameter	2.1

	(lbs/in^2)	($tons/ft^2$)		
Uncon. Compressive Strength =	**14.4**	**1.0**	**Strain at failure =**	**1.9%**
Shear Strength =	**7.2**	**0.5**	**Avg. Strain Rate (%/min) =**	**1.0%**

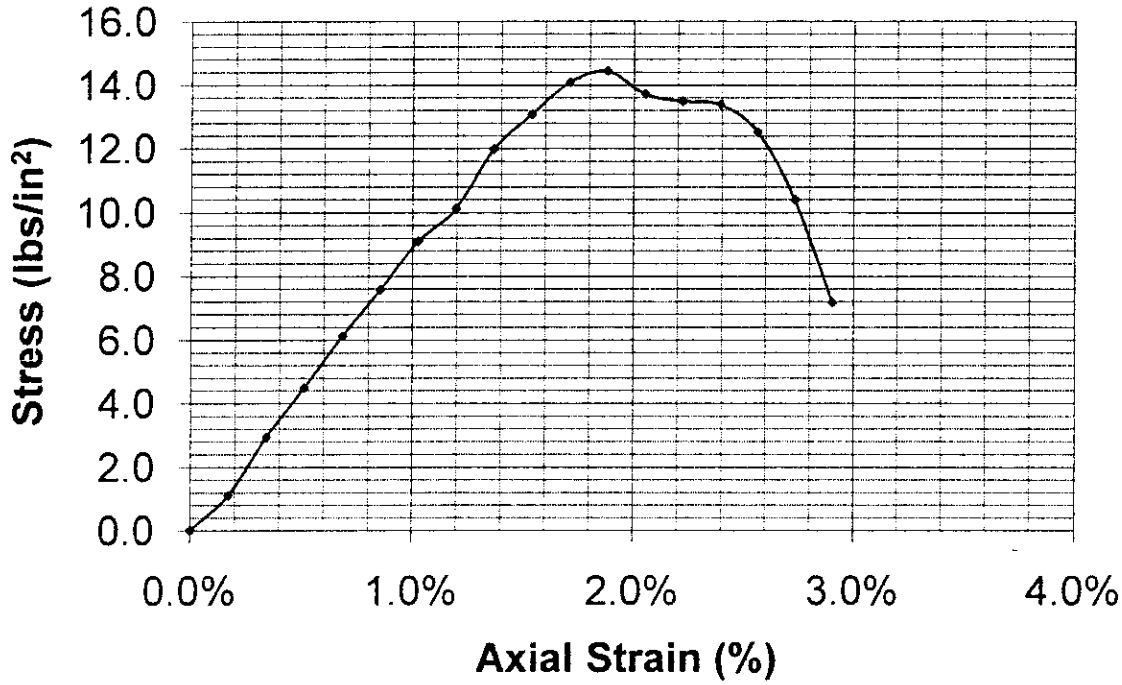

Figure E-2

HWS
Solutions Through Service

LINCOLN OFFICE
825 "J" Street
P.O. Box 80358
Lincoln, Nebraska
(402) 479-2200

UNCONFINED - COMPRESSION TEST

ASTM Designation: D 2166

Project	**MidAmerican Energy Flyash Containment Assessment**				
Job No.	**52-69-5092**	Boring No.	**B-12**	Depth	**6.1'-6.7'**
Sample No.	**T-1**	Lab No.	**26096**	Classification	**CL**
Type of Specimen	**3" Tube**			Humidity During Trimming	**50%**
Remarks					

MOISTURE	
Container Number	1181
Total Wet Wt. (g)	169.6
Total Dry Wt. (g)	138.1
Container Wt. (g)	39.1
Water Content (%)	31.8
Saturation (%)	83.2

Specimen Diameter (in)	2.844
Initial Length (in)	5.400
Wet Wt. of Specimen (g)	983.5
End Area (in^2)	6.35
Volume (in^3)	34.30
Wet Unit Wt. (lbs/ft^3)	109.2
Dry Unit Wt. (lbs/ft^3)	82.9
Length/Diameter	1.9

	(lbs/in^2)	($tons/ft^2$)		
Uncon. Compressive Strength =	**9.4**	**0.7**	**Strain at failure =**	**6.7%**
Shear Strength =	**4.7**	**0.3**	**Avg. Strain Rate (%/min) =**	**1.1%**

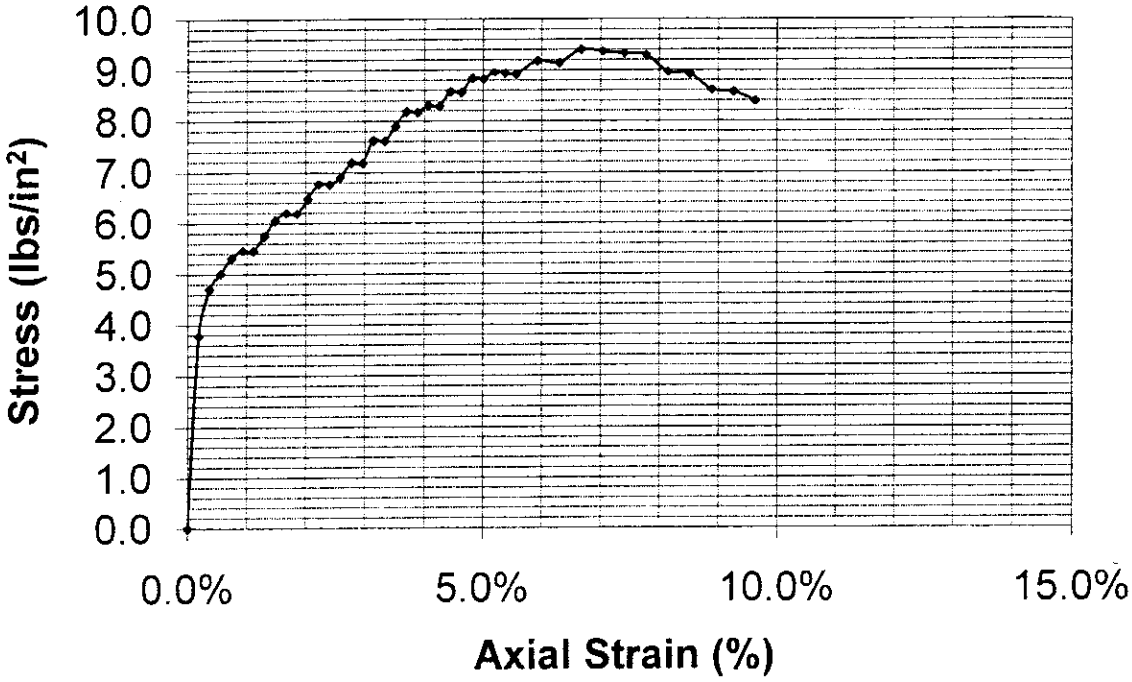

Figure E-3

HWS
Solutions Through Service

LINCOLN OFFICE
825 "J" Street
P.O. Box 80358
Lincoln, Nebraska
(402) 479-2200

UNCONFINED - COMPRESSION TEST

ASTM Designation: D 2166

Project	**MidAmerican Energy Flyash Containment Assessment**				
Job No.	**52-69-5092**	Boring No.	**B-12**	Depth	**12.2'-12.9'**
Sample No.	**T-2**	Lab No.	**26098**	Classification	**CL**
Type of Specimen	**3" Tube**			Humidity During Trimming	**50%**
Remarks					

MOISTURE	
Container Number	1205
Total Wet Wt. (g)	176.0
Total Dry Wt. (g)	143.6
Container Wt. (g)	39.4
Water Content (%)	31.1
Saturation (%)	86.7

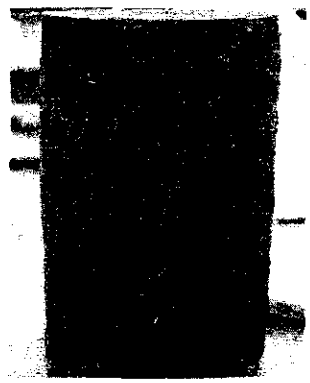

Specimen Diameter (in)	2.839
Initial Length (in)	5.066
Wet Wt. of Specimen (g)	944.4
End Area (in^2)	6.33
Volume (in^3)	32.07
Wet Unit Wt. (lbs/ft^3)	112.2
Dry Unit Wt. (lbs/ft^3)	85.6
Length/Diameter	1.8

	(lbs/in^2)	($tons/ft^2$)		
Uncon. Compressive Strength =	**11.1**	**0.8**	**Strain at failure =**	**6.3%**
Shear Strength =	**5.5**	**0.4**	**Avg. Strain Rate (%/min) =**	**1.1%**

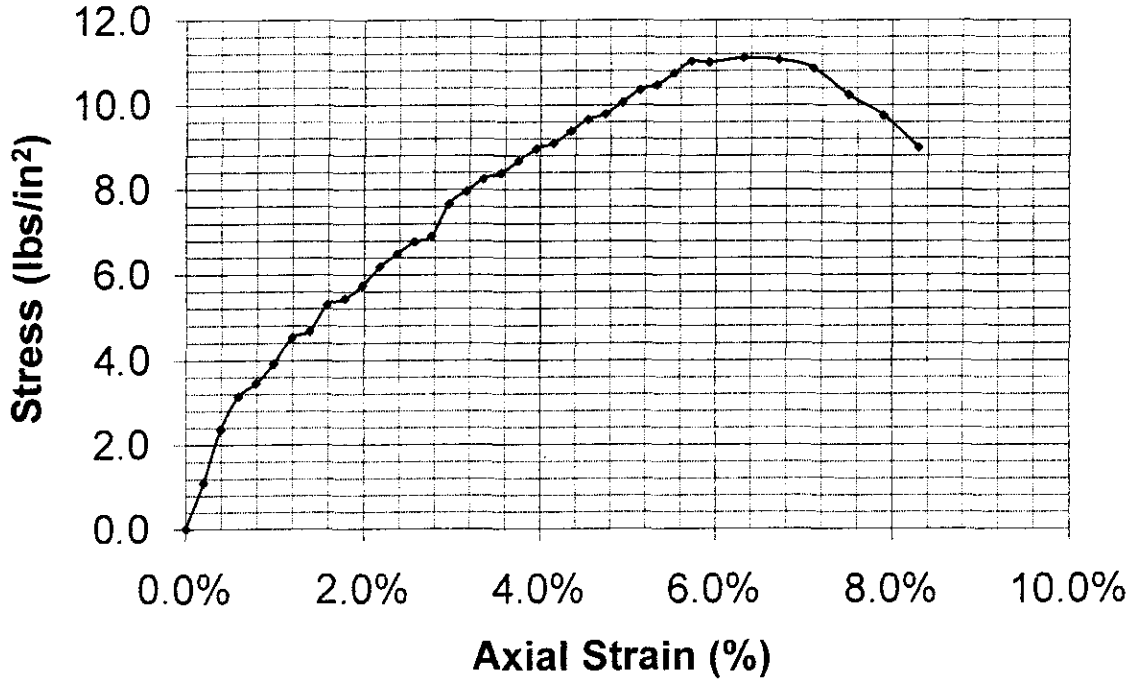

Figure E-4

APPENDIX F

[redacted]

TRIAXIAL SHEAR TEST

HWS Solutions Through Service

PROJECT and STATE: MID AMERICAN ENERGY -- FLY ASH CONTAINMENT			SAMPLE LOCATION: B-9a
FIELD SAMPLE NO: ?	DEPTH: 17.2'-17.8'	GEOLOGIC ORIGIN: FAT CLAY	
TYPE SAMPLE: 5" Shelby Tube	TESTED AT: HWS, Lincoln, NE	APPROVED BY: B. Desh	DATE: 6-2-2009

INDEX TEST DATA

USCS CH ; LL ; PI
%FINER(mm): 0.002 ; 0.005 ;
0.074(#200)
G_s (-#4) , G_s (+#4)
STANDARD: γ_d MAX. pcf ; W_{opt} %
MODIFIED: γ_d MAX. pcf ; W_{opt} %

SPECIMEN DATA

HEIGHT 2.94 "; DIAMETER 1.40 "
MATERIALS TESTED PASSED SIEVE
METHOD OF PREPARATION TRIMMED FROM 5" SHELBY TUBE SAMPLE
MOLDING MOISTURE %
MOLDED AT % OF γ_d MAXIMUM

TYPE OF TEST: UU [XXX] CU [ ] CU' [ ] CD [ ]

DRY DENSITY INITIAL (pcf [XX] g/cc [ ])	DRY DENSITY CONSOLIDATED (pcf [XX] g/cc [ ])	B PARAMETER	MOISTURE CONTENT, % START OF TEST	MOISTURE CONTENT, % DEG. OF SAT. AT START OF TEST	MOISTURE CONTENT, % END OF TEST	TIME OF CONSOLIDATION (hrs.)	MINOR PRINCIPAL STRESS σ_3 (psi.)	DEVIATOR STRESS $\sigma_1 - \sigma_3$ (psi.)	AXIAL STRAIN AT FAILURE, ε (%)
75.3	71.9	97	45.5	99.4	49.8	-	4.0	8.0	8.9
75.4	72.4	96	46.2	101.0	49.3	-	8.0	8.0	0.9
76.0	72.3	98	44.7	99.0	49.7	-	12.0	7.8	7.5

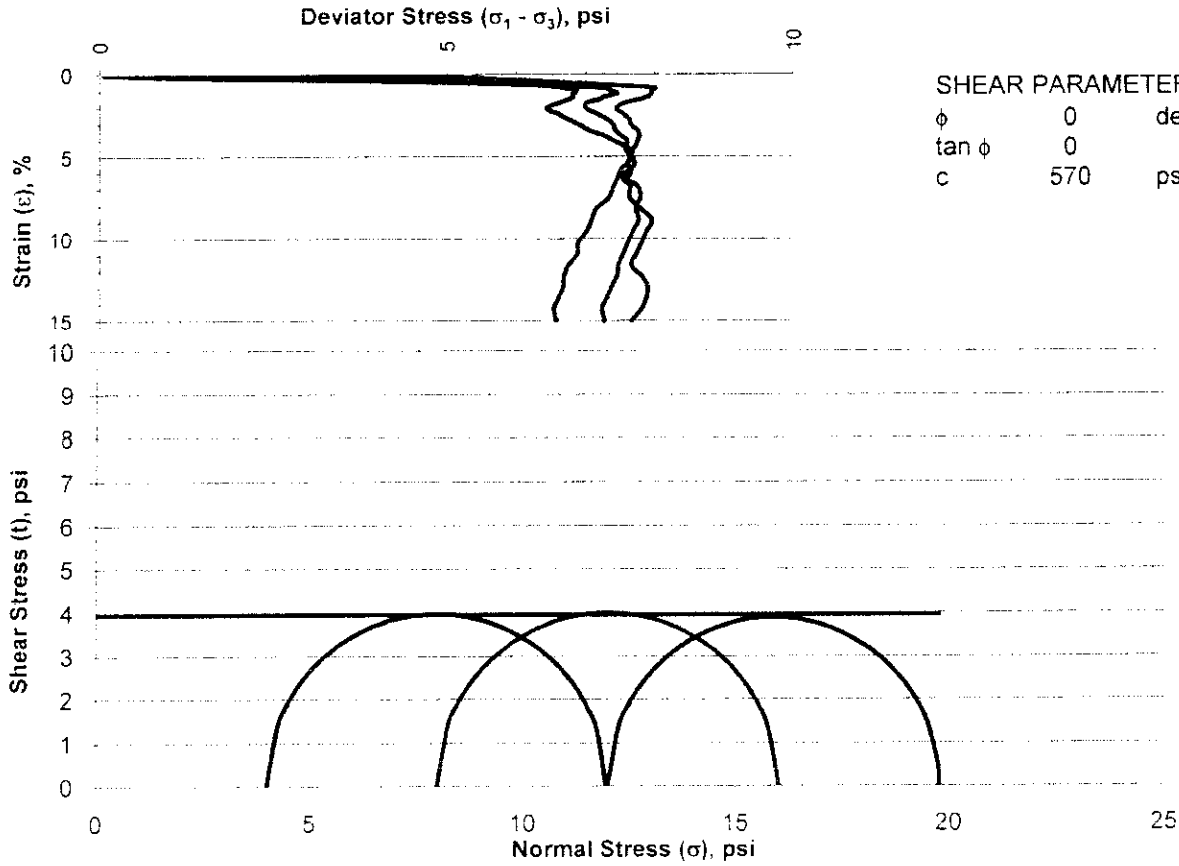

SHEAR PARAMETERS

ϕ	0	deg.
tan ϕ	0	
c	570	psf

REMARKS

TRIAXIAL SHEAR TEST

HWS Solutions Through Service

PROJECT and STATE	MID AMERICAN ENERGY -- FLY ASH CONTAINMENT
SAMPLE LOCATION	B-14c
FIELD SAMPLE NO.	2
DEPTH	0.9'-1.7'
GEOLOGIC ORIGIN	FAT CLAY
TYPE SAMPLE	5" Shelby Tube
TESTED AT	HWS, Lincoln, NE
APPROVED BY	B. Desh
DATE	6-3-2009

INDEX TEST DATA

USCS CH ; LL ; PI
%FINER(mm): 0.002 ; 0.005 ;
0.074(#200)
G_s (-#4) G_s (+#4)
STANDARD: γ_d MAX. pcf ; W_{opt} %
MODIFIED: γ_d MAX. pcf ; W_{opt} %

SPECIMEN DATA

HEIGHT 2.94 "; DIAMETER 1.40 "
MATERIALS TESTED PASSED SIEVE
METHOD OF PREPARATION TRIMMED FROM
5" SHELBY TUBE SAMPLE
MOLDING MOISTURE %
MOLDED AT % OF γ_d MAXIMUM

TYPE OF TEST: UU [XXX] CU [ ] CU' [ ] CD [ ]

DRY DENSITY INITIAL (pcf XX, g/cc)	DRY DENSITY CONSOLIDATED (pcf XX, g/cc)	B PARAMETER	MOISTURE CONTENT, % START OF TEST	MOISTURE CONTENT, % DEG. OF SAT. AT START OF TEST	MOISTURE CONTENT, % END OF TEST	TIME OF CONSOLIDATION (hrs.)	MINOR PRINCIPAL STRESS σ_3 (psi.)	DEVIATOR STRESS $\sigma_1 - \sigma_3$ (psi.)	AXIAL STRAIN AT FAILURE, ε (%)
98.5	97.2	97	26.3	99.8	27.4	-	3.0	24.2	14.9
101.9	99.7	97	23.0	95.0	25.8	-	9.0	27.3	15.0
######	######		####	#####	####	-	0.0	0.0	0.0

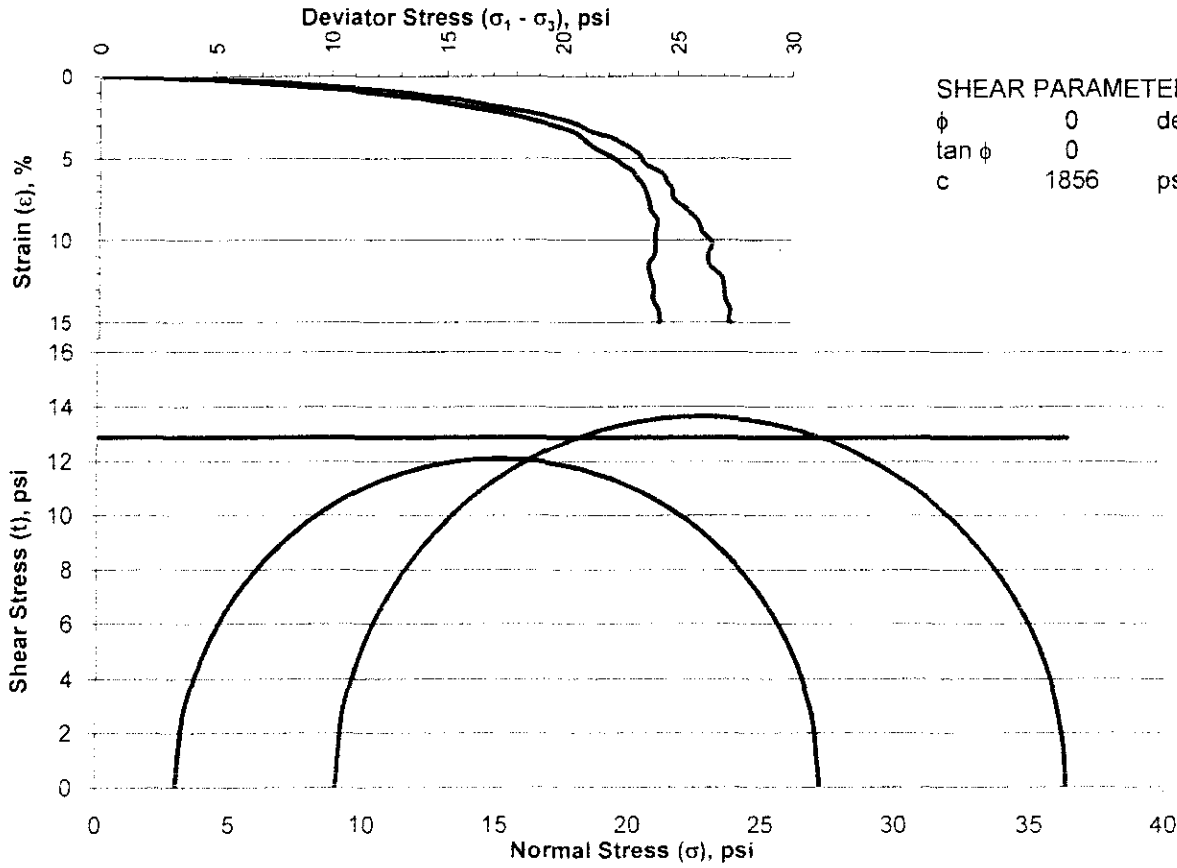

SHEAR PARAMETERS

ϕ	0	deg.
tan ϕ	0	
c	1856	psf

REMARKS

TRIAXIAL SHEAR TEST

HWS Solutions Through Service

PROJECT and STATE			SAMPLE LOCATION
MID AMERICAN ENERGY -- FLY ASH CONTAINMENT			B-15
FIELD SAMPLE NO. 26[illegible]	DEPTH 5.5'-6.1'	GEOLOGIC ORIGIN FLY ASH	
TYPE SAMPLE 5" Shelby Tube	TESTED AT HWS, Lincoln, NE	APPROVED BY B. Desh	DATE 5-31-2009

INDEX TEST DATA

USCS _____ ; LL _____ ; PI _____

%FINER(mm): 0.002 _____ ; 0.005 _____ ; 0.074(#200) _____

G_s (-#4) _____ ; G_s (+#4) _____

STANDARD: γ_d MAX. _____ pcf ; W_{opt} _____ %

MODIFIED: γ_d MAX. _____ pcf ; W_{opt} _____ %

SPECIMEN DATA

HEIGHT 2.94 "; DIAMETER 1.40 "

MATERIALS TESTED PASSED _____ SIEVE

METHOD OF PREPARATION TRIMMED FROM 5" SHELBY TUBE SAMPLE

MOLDING MOISTURE _____ %

MOLDED AT _____ % OF γ_d MAXIMUM

TYPE OF TEST: UU [XXX] CU [ ] CU' [ ] CD [ ]

DRY DENSITY INITIAL (pcf [XX] g/cc [ ])	DRY DENSITY CONSOLIDATED (pcf [XX] g/cc [ ])	B PARAMETER	MOISTURE CONTENT, % START OF TEST	MOISTURE CONTENT, % DEG. OF SAT. AT START OF TEST	MOISTURE CONTENT, % END OF TEST	TIME OF CONSOLIDATION (hrs.)	MINOR PRINCIPAL STRESS σ_3 (psi.)	DEVIATOR STRESS $\sigma_1 - \sigma_3$ (psi.)	AXIAL STRAIN AT FAILURE, ε (%)
52.9	56.1	96	72.2	89.1	74.3	-	3.0	25.7	2.0
53.0	53.1	97	71.3	88.3	80.5	-	6.0	28.0	2.1
51.8	50.1	96	70.8	84.8	87.7	-	9.0	23.1	1.7

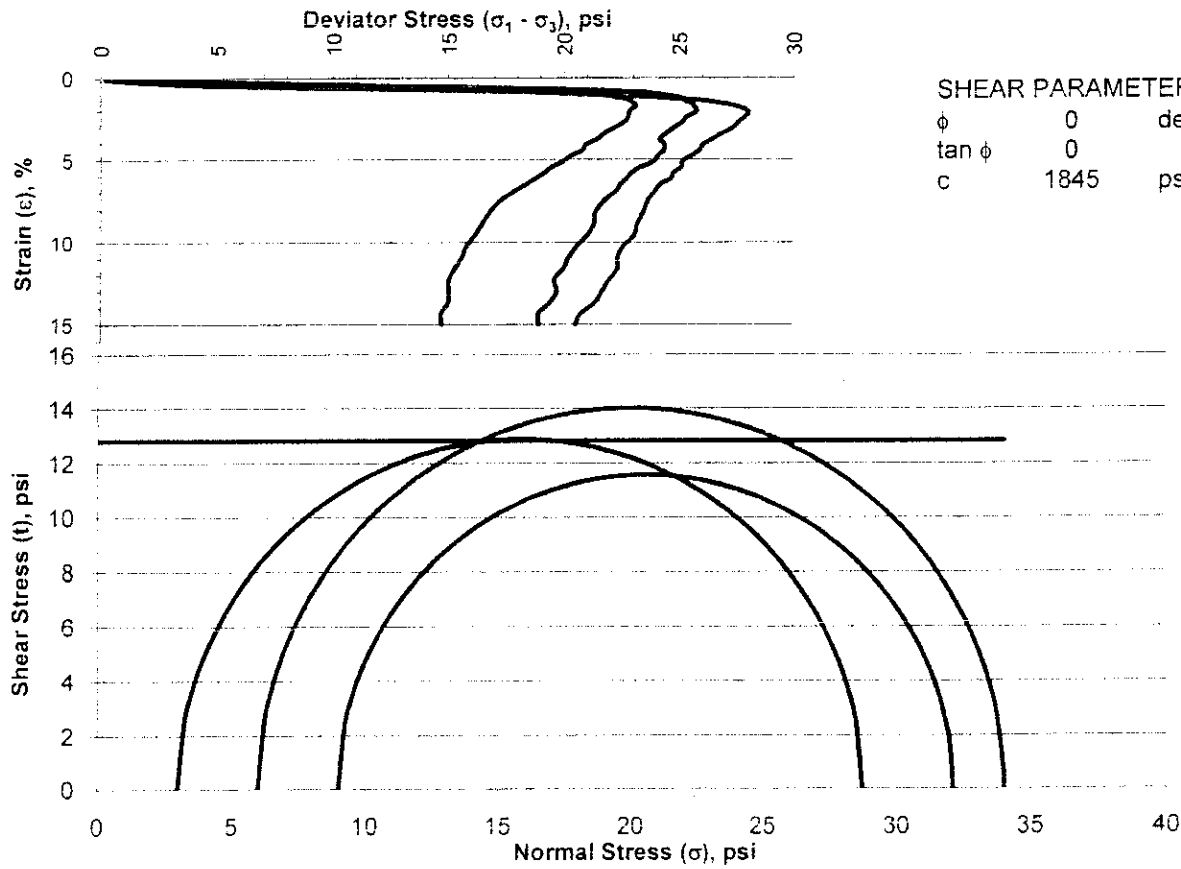

SHEAR PARAMETERS

ϕ	0	deg.
tan ϕ	0	
c	1845	psf

REMARKS

APPENDIX H

[redacted]

Mid American Energy Port Neal North Fly Ash Berm Underseepage Calculations
Underseepage Analysis with Current Profile-June 9, 2009
Unit Side ("River") Analysis, Max Pool Elevation Shown

ic = 0.92

Station	Max Pool Elevation[1]	Floor Elevation	H	Natural Blanket Dbr	Natural Blanket Dbl	kf/kbr	kf/kbl	Df	Lr	L2	Le	Cbr	L1	Ls	w/o Berm ho	Berm G.S.F
A-A	1089	1086	3	14	4	3.60E+01	2.50E+00	70	1000	36	26.458	187.83	187.82	223.82	0.3171	11.6
B-B	1089	1076	13	2	7	1.96E+03	2.50E+00	70	1000	116	35	523.16	500.78	616.78	0.6981	9.2
E-E	1082	1069	13	2	7.5	3.60E+01	1.26E+04	70	600	116	2576.8	70.993	70.993	186.99	12.12	0.6
G-G	1086	1084.5	1.5	15.5	8	3.60E+01	2.70E+01	70	750	24	122.96	197.64	197.44	221.44	0.5356	13.7
H2-H2	1082	1074	8	16	8	1.96E+03	1.96E+03	70	1500	76	1046.3	1479.7	1135.4	1211.4	3.7076	2.0
K2-K2	1082	1074	8	6.5	4	3.91E+03	1.95E+03	70	1000	76	739.68	1333.6	846.92	922.92	3.5591	1.0

Mid American Energy Port Neal North Fly Ash Berm Underseepage Calculations
Underseepage Analysis for Proposed Profile-June 9, 2009
Unit Side ("River") Analysis, Max Pool Elevation Shown

ic = 0.92

Station	Max Pool Elevation[1]	Floor Elevation	H	Natural Blanket Dbr	Natural Blanket Dbl	kf/kbr	kf/kbl	Df	Lr	L2	Le	Cbr	L1	Ls	w/o Berm ho	w/o Berm G.S.F
A-A	1082	1074	8	1.5	4	3.60E+01	2.50E+00	70	1000	76	26.458	61.482	61.482	137.48	1.2911	2.9
B-B	1082	1072.5	9.5	2	7	1.96E+03	2.50E+00	70	1000	88	35	523.16	500.78	588.78	0.533	12.1
E-E	1078.5	1074	4.5	4	7.5	3.60E+01	1.26E+04	70	500	48	2576.8	100.4	100.39	148.39	4.255	1.6
G-G	1082	1072.5	9.5	3.5	8	3.60E+01	2.70E+01	70	750	88	122.96	93.915	93.915	181.91	3.8315	1.9
H2-H2	1082	1072.5	9.5	14.5	8	1.96E+03	1.96E+03	70	1500	88	1046.3	1408.7	1109.3	1197.3	4.4303	1.7
K2-K2	1078.5	1074	5	8	4	3.91E+03	1.95E+03	70	1000	52	739.68	1479.7	871.24	923.24	2.224	1.7

Mid American Energy Port Neal North Fly Ash Berm Underseepage Calculations
Underseepage Analysis with Current Profile-June 9, 2009
River or Pond Side Analysis, 100 year Flood Elevation =1076.0 feet
ic = 0.92

Station	100 yr Elevation[1]	Blanket Top Elevation	H	Natural Blanket Dbr	Natural Blanket Dbl	kf/kbr	kf/kbl	Df	Lr	L2	Le	Cbr	L1	Ls	w/o Berm ho	Berm G.S.F
A-A	No river at this location															
B-B	No river at this Location															
E-E	1076	1075	1	5	5	1.26E+04	3.60E+01	70	40	20	112.25	2103.9	39.995	59.995	0.6517	7.1
G-G	1076	1074	2	4	15.5	2.69E+02	3.58E+02	70	30	28	623.24	274.44	29.881	57.881	1.83	7.8
H2-H2	1076	1073	3	8	16	1.96E+03	1.96E+03	70	50	36	1479.7	1046.3	49.962	85.962	2.8353	5.2
K2-K2	1076	1074	2	4	6.5	1.96E+03	3.91E+03	70	50	28	1333.8	739.86	49.924	77.924	1.8896	3.2

Mid American Energy Port Neal North Fly Ash Berm Underseepage Calculations
Underseepage Analysis with Proposed Profile-June 9, 2009
River or Pond Side Analysis, 100 year Flood Elevation =1076.0 feet
ic = 0.92

Station	100 yr Elevation[1]	Blanket Top Elevation	H	Natural Blanket Dbr	Natural Blanket Dbl	kf/kbr	kf/kbl	Df	Lr	L2	Le	Cbr	L1	Ls	w/o ho	Berm G.S.F
A-A	No river or pond at this location															
B-B	No river or pond at this Location															
E-E	1076	1075	1	5	1	1.26E+04	3.60E+01	70	40	20	50.2	2103.9	39.995	59.995	0.4556	2.0
G-G	1076	1074	2	4	3.5	2.69E+02	3.58E+02	70	30	28	296.16	274.44	29.881	57.881	1.673	1.9
H2-H2	1076	1073	3	8	16	1.96E+03	1.96E+03	70	50	36	1479.7	1046.3	49.962	85.962	2.8353	5.2
K2-K2	1076	1074	2	4	6.5	1.96E+03	3.91E+03	70	50	28	1333.8	739.86	49.924	77.924	1.8896	3.2

APPENDIX D

3) HWS Report Appendix H (Liquefaction analyses results)

APPENDIX H. UNDERSEEPAGE AND LIQUEFACTION ANALYSES

52-69-5092															
Mid American Energy Liquefaction Analysis															
June 12, 2009															
SPT-Based															
Section	A-A														
Boring No.	B-1		WT	30	feet										
amax/g =	0.06908		MW	5.9		MSF =	2.03								
Depth, ft	N	γ		$\sigma\in 0$	$\sigma\in 0'$	Dsv	$\sigma\in'$	z, meters	rd	(N1)60	CRR7.5	CSR	Ks		FS
17.5	13	120		2100	2100	0	2100	5.334065	0.962991	16.8	0.1790	0.0432	0.8		6.72
20	13	120		2400	2400	0	2400	6.096074	0.956895	15.7	0.1676	0.0430	0.8		6.33
22.5	10	120		2700	2700	0	2700	6.858083	0.949958	11.4	0.1258	0.0427	0.8		4.79
25	10	120		3000	3000	0	3000	7.620093	0.941833	10.8	0.1205	0.0423	0.8		4.62

52-69-5092															
Mid American Energy Liquefaction Analysis															
June 12, 2009															
SPT-Based															
Section	B-B														
Boring No.	B-2		WT	16	feet										
amax/g =	0.06908		MW	5.9		MSF =	2.03								
Depth, ft	N	γ		$\sigma\in 0$	$\sigma\in 0'$	Dsv	$\sigma\in'$	z, meters	rd	(N1)60	CRR7.5	CSR	Ks		FS
15	7	120		1800	1800	0	1800	4.572056	0.968558	9.8	0.1113	0.0435	0.8		4.15
17.5	14	120		2100	2006.4	0	2006.4	5.334065	0.962991	18.5	0.1980	0.0453	0.8		7.10
20	14	120		2400	1152	0	1152	6.096074	0.956895	24.5	0.2818	0.0895	0.8		5.11
22.5	9	120		2700	1664.16	0	1664.16	6.858083	0.949958	13.1	0.1414	0.0692	0.8		3.31
25	9	120		3000	1440	0	1440	7.620093	0.941833	14.1	0.1509	0.0881	0.8		2.78

52-69-5092															
Mid American Energy Liquefaction Analysis															
June 12, 2009															
SPT-Based															
Section	E-E														
Boring No.	B-14		WT depth=		Not Enc.	feet									
amax/g =	0.06908		MW	5.9		MSF =	2.03								
Depth, ft	N	γ		$\sigma\in 0$	$\sigma\in 0'$	Dsv	$\sigma\in'$	z, meters	rd	(N1)60	CRR7.5	CSR	Ks		FS
17.5	8	120		2100	2100	0	2100	5.334065	0.962991	10.4	0.1163	0.0432	0.8		4.36
20	8	120		2400	2400	0	2400	6.096074	0.956895	9.7	0.1104	0.0430	0.8		4.17
22.5	5	120		2700	2700	0	2700	6.858083	0.949958	5.7	0.0774	0.0427	0.8		2.94
25	5	120		3000	3000	0	3000	7.620093	0.941833	5.4	0.0752	0.0423	0.8		2.88

52-69-5092															
Mid American Energy Liquefaction Analysis															
June 12, 2009															
SPT-Based															
Section	G-G														
Boring No.	B-15		WT depth=		Not Enc.	feet									
amax/g =	0.06908		MW	5.9		MSF =	2.03								
Depth, ft	N	γ		$\sigma\in 0$	$\sigma\in 0'$	Dsv	$\sigma\in'$	z, meters	rd	(N1)60	CRR7.5	CSR	Ks		FS
17.5	11	120		2100	2100	0	2100	5.334065	0.962991	14.2	0.1525	0.0432	0.8		5.72
20	8	120		2400	2400	0	2400	6.096074	0.956895	9.7	0.1104	0.0430	0.8		4.17
22.5	18	120		2700	2700	0	2700	6.858083	0.949958	20.6	0.2224	0.0427	0.8		8.46
25	18	120		3000	3000	0	3000	7.620093	0.941833	19.5	0.2093	0.0423	0.8		8.03
27.5	9	120		3300	3300	0	3300	8.382102	0.932156	9.3	0.1070	0.0419	0.8		4.14
30	9	120		3600	3600	0	3600	9.144111	0.920576	8.9	0.1035	0.0413	0.8		4.06

52-69-5092															
Mid American Energy Liquefaction Analysis															
June 12, 2009															
SPT-Based															
Section	H2-H2	Foundation Material at B-12 is Clay so analysis is if sand were present													
Boring No.	B-12		WT	6	feet										
amax/g =	0.06908		MW	5.9		MSF =	2.03								
Depth, ft	N	γ		$\sigma\in 0$	$\sigma\in 0'$	Dsv	$\sigma\in'$	z, meters	rd	(N1)60	CRR7.5	CSR	Ks		FS
17.5	4	120		2100	1382.4	0	1382.4	5.334065	0.962991	6.4	0.0827	0.0657	0.8		2.04
20	4	120		2400	1152	0	1152	6.096074	0.956895	7.0	0.0876	0.0895	0.8		1.59
22.5	8	120		2700	1664.16	0	1664.16	6.858083	0.949958	11.6	0.1278	0.0692	0.8		3.00
25	8	120		3000	1440	0	1440	7.620093	0.941833	12.5	0.1359	0.0881	0.8		2.50

52-69-5092

Mid American Energy Liquefaction Analysis

June 12, 2009

SPT-Based

Section K2-K2

Boring No. B-9a WT 21 feet

amax/g = 0.06908 MW 5.9 MSF = 2.03

Depth, ft	N	γ	$\sigma\in 0$	$\sigma\in 0'$	Dsv	$\sigma\in'$	z, meters	rd	(N1)60	CRR7.5	CSR	Ks	FS
17.5	19	120	2100	2100	0	2100	5.334065	0.962991	24.6	0.2842	0.0432	0.8	10.66
20	19	120	2400	2400	0	2400	6.096074	0.956895	23.0	0.2571	0.0430	0.8	9.71
22.5	10	120	2700	1664.16	0	1664.16	6.858083	0.949958	14.5	0.1555	0.0692	0.8	3.64
25	10	120	3000	1440	0	1440	7.620093	0.941833	15.6	0.1665	0.0881	0.8	3.07

APPENDIX D

4) Design drawings for outlet structure

LEGEND

THIS CONTRACT | EXISTING

- ✻TOP OF SLOPE
- ✻TOE OF SLOPE
- PIPING
- FENCES
- STRUCTURES

✻ TOP OR TOE OF SLOPE TO MATCH EXIST. GRADE UNLESS AN ELEVATION OR SLOPE IS INDICATED.

ABBREVIATIONS

ABBREVIATION	TERM	ABBREVIATION	TERM
@	AT	MISC	MISCELLANEOUS
AHD	AHEAD	M.O.	MID-ORDINATE
AUX	AUXILIARY	O.D.	OUTSIDE DIAMETER
BK	BACK	±	PLUS OR MINUS
BLDG	BUILDING	R.	PROPERTY LINE
BOT	BOTTOM	P.C.	POINT OF CURVE
C.B.	CATCH BASIN	PCC	PORTLAND CEMENT CONCRETE
C/C	CENTER TO CENTER	P.I.	POINT OF INTERSECTION
℄	CENTERLINE	P.T.	POINT OF TANGENT
CHDPE	CCORRUGATED HIGH DENSITY POLYETHYLENE	P.V.C.	POINT OF VERTICAL CURVE
C.J.	CONSTRUCTION JOINT	P.V.I.	POINT OF VERTICAL INTERSECTION
CMAP	CORRUGATED METAL ARCH PIPE	P.V.T.	POINT OF VERTICAL TANGENT
CMP	CORRUGATED METAL PIPE	R	RADIUS
CONC	CONCRETE	RCP	REINFORCED CONCRETE PIPE
CPT	CORRUGATED POLYETHELENE TUBING	RD	ROAD
DBL	DOUBLE	RR	RAILROAD
DET	DETAIL	RT	RIGHT
D.I.	DROP INLET	R/W	RIGHT-OF-WAY
Ø,DIA	DIAMETER	S	SLOPE
DWG.	DRAWING	SHLDR	SHOULDER
EDB	ELECTRICAL DUCT BANK	STD	STANDARD
E.F.	EACH FACE	SS	STORM SEWER
E.J.	EXPANSION JOINT	STA.	STATION
EL.	ELEVATION	SWG	SWING
EMH	ELECTRICAL MANHOLE	T&B	TOP AND BOTTOM
EQN	EQUATION	TEMP	TEMPORARY
EXIST.	EXISTING	T.O.A.	TOP OF ASPHALT
E.W.	EACH WAY	T.O.C.	TOP OF CONCRETE
FBD	FLAT BOTTOM DITCH	T.O.CURB	TOP OF CURB
FL	FLOWLINE	T.O.G.	TOP OF GRATING
GA	GAGE	T.O.M.	TOP OF MANHOLE
GALV	GALVANIZED	T.O.P.	TOP OF PAVEMENT
H.P.	HIGH DPOINT	T.O.R.	TOP OF RAIL
HDPE	HIGH DENSITY POLYETHYLENE	T.O.SB	TOP OF SUBBALLAST
HORIZ	HORIZONTAL	TYP	TYPICAL
HWY	HIGHWAY	U.O.N.	UNLESS OTHERWISE NOTED
I.D.	INSIDE DIAMETER	V.C.	VERTICAL CURVE
I.F.	INSIDE FACE	VERT	VERTICAL
INV. EL.	INVERT ELEVATION	W/	WITH
LG	LONG	W/O	WITHOUT
LT	LEFT	WWF	WELDED WIRE FABRIC
MAX	MAXIMUM		
M.H.	MANHOLE		
MIN	MINIMUM		

NOTE:

1. ALL ABBREVIATIONS ARE BURNS & McDONNELL STANDARDS WITHOUT RESPECT TO CONTRACTS.
2. ABBREVIATIONS ARE APPLICABLE TO ALL DWGS.

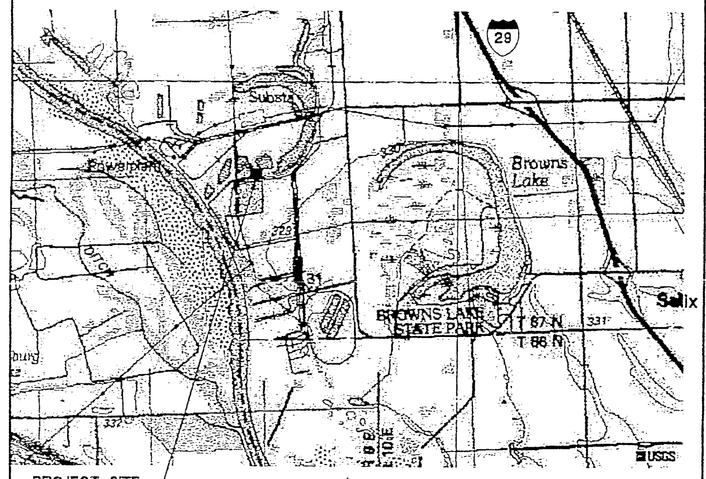

PROJECT SITE

N

VICINITY MAP

NOT TO SCALE

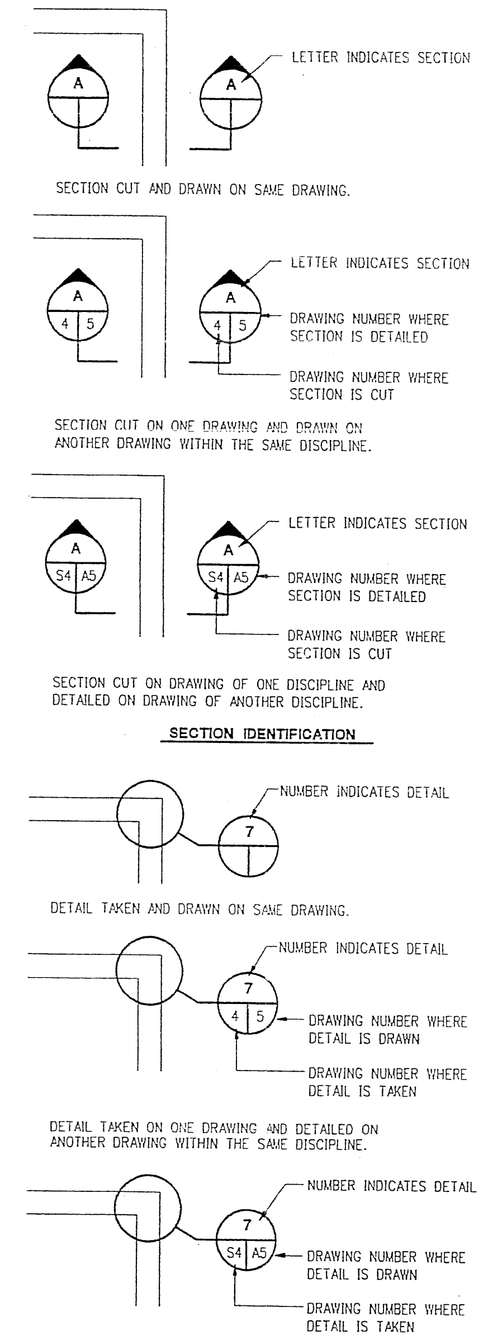

no.	date	by	revision
0	3/10/04	JWG	ISSUED FOR BID

GENERAL NOTES:

1. ALL ELEVATIONS SHOWN ARE FINISH GRADE ELEVATION.
2. REFERENCE INFORMATION FOR ALL OWNER-SUPPLIED EQUIPMENT AND MATERIALS SHALL BE AVAILABLE UPON REQUEST.
3. CONTRACTOR SHALL COORDINATE DIVERSION OF ASH POND DISCHARGE WITH OWNER AND ENGINEER TO MAINTAIN POND OPERATION AS REQUIRED BY OWNER.

MidAmerican ENERGY

LIST OF CONTRACT DRAWINGS

COVER SHEET

CIVIL

Y1	INDEX, LEGEND, ABBREVIATIONS, VICINITY MAP, SECTION INDICATORS AND GENERAL NOTES
Y2	LAYOUT PLAN
Y3	PIPE AND DUCT BANK PLAN
Y4	EXISTING WET WELL AND STOP LOG STRUCTURE GENERAL LAYOUT
Y5	GENERAL DETAILS

STRUCTURAL

S1	GENERAL DETAILS
S2	STOP LOG STRUCTURE DETAILS
S3	ACCESS BRIDGE AND ACCESS WALKWAY DETAILS

RANDELL L. SEDLACEK 16384 IOWA LICENSED PROFESSIONAL ENGINEER

I hereby certify that this engineering document was prepared by me or under my direct supervision and that I am a duly licensed Professional Engineer under the laws of the State of Iowa.

Randell L. Sedlacek

My license renewal date is December 31, 2005. Pages or sheets covered by this seal: This Drawing only.

Burns & McDonnell SINCE 1898

date JANUARY 8, 2004	detailed D. MADDOCK
designed J. GANDER	checked R.L.S.

MidAmerican ENERGY

NEAL NORTH STATION
UNIT 3 ASH POND
DISCHARGE IMPROVEMENTS

ASH POND DISCHARGE STRUCTURE CONSTRUCTION

INDEX, LEGEND, ABBREVIATIONS, VICINITY MAP, SECTION INDICATORS AND GENERAL NOTES

project 34784	contract 100
drawing Y1	rev. 0
sheet of	sheets

file U:\MIDAM\ER\34784\CADD\CIVIL\midy1.dgn

COPYRIGHT © 2004 BY BURNS & McDONNELL ENGINEERING COMPANY, INC.

c:\temp\Energy.tbl

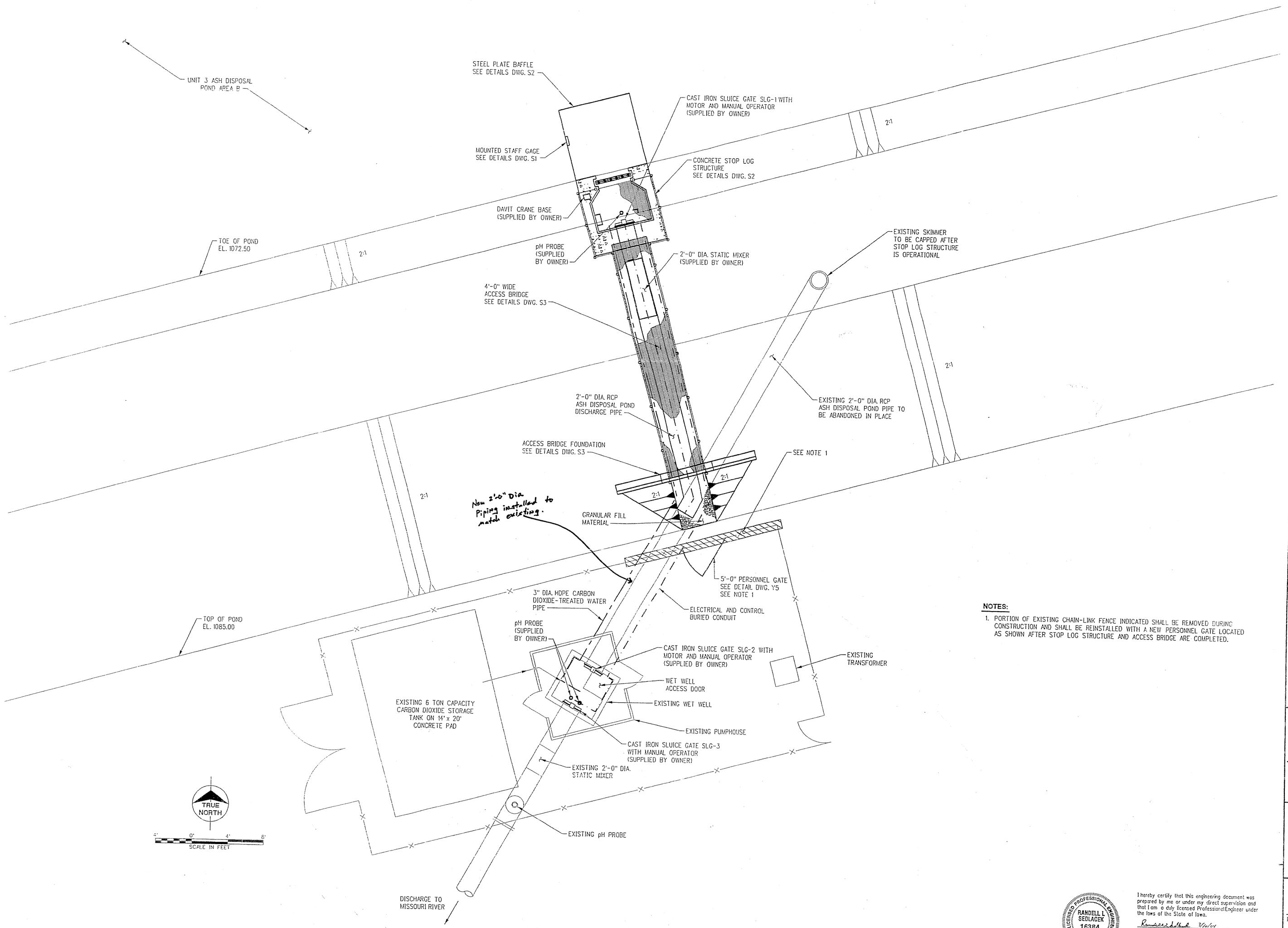

NOTES:

1. PORTION OF EXISTING CHAIN-LINK FENCE INDICATED SHALL BE REMOVED DURING CONSTRUCTION AND SHALL BE REINSTALLED WITH A NEW PERSONNEL GATE LOCATED AS SHOWN AFTER STOP LOG STRUCTURE AND ACCESS BRIDGE ARE COMPLETED.

no.	date	by	revision
0	3/10/04	JWG	ISSUED FOR BID

Burns & McDonnell

date JANUARY 13, 2004	detailed D. MADDOCK
designed J. GANDER	checked R.L.S.

MidAmerican ENERGY

NEAL NORTH STATION
UNIT 3 ASH POND
DISCHARGE IMPROVEMENTS

ASH POND DISCHARGE STRUCTURE CONSTRUCTION
LAYOUT PLAN

project 34784	contract 100
drawing Y2	rev. 0
sheet of	sheets

LICENSED PROFESSIONAL ENGINEER RANDELL L. SEDLACEK 16384 IOWA

I hereby certify that this engineering document was prepared by me or under my direct supervision and that I am a duly licensed Professional Engineer under the laws of the State of Iowa.

Randell L. Sedlacek 3/10/04

Randell L. Sedlacek

My license renewal date is December 31, 2005.
Pages or sheets covered by this seal:
This Drawing only.

COPYRIGHT © 2004 BY BURNS & McDONNELL ENGINEERING COMPANY, INC.

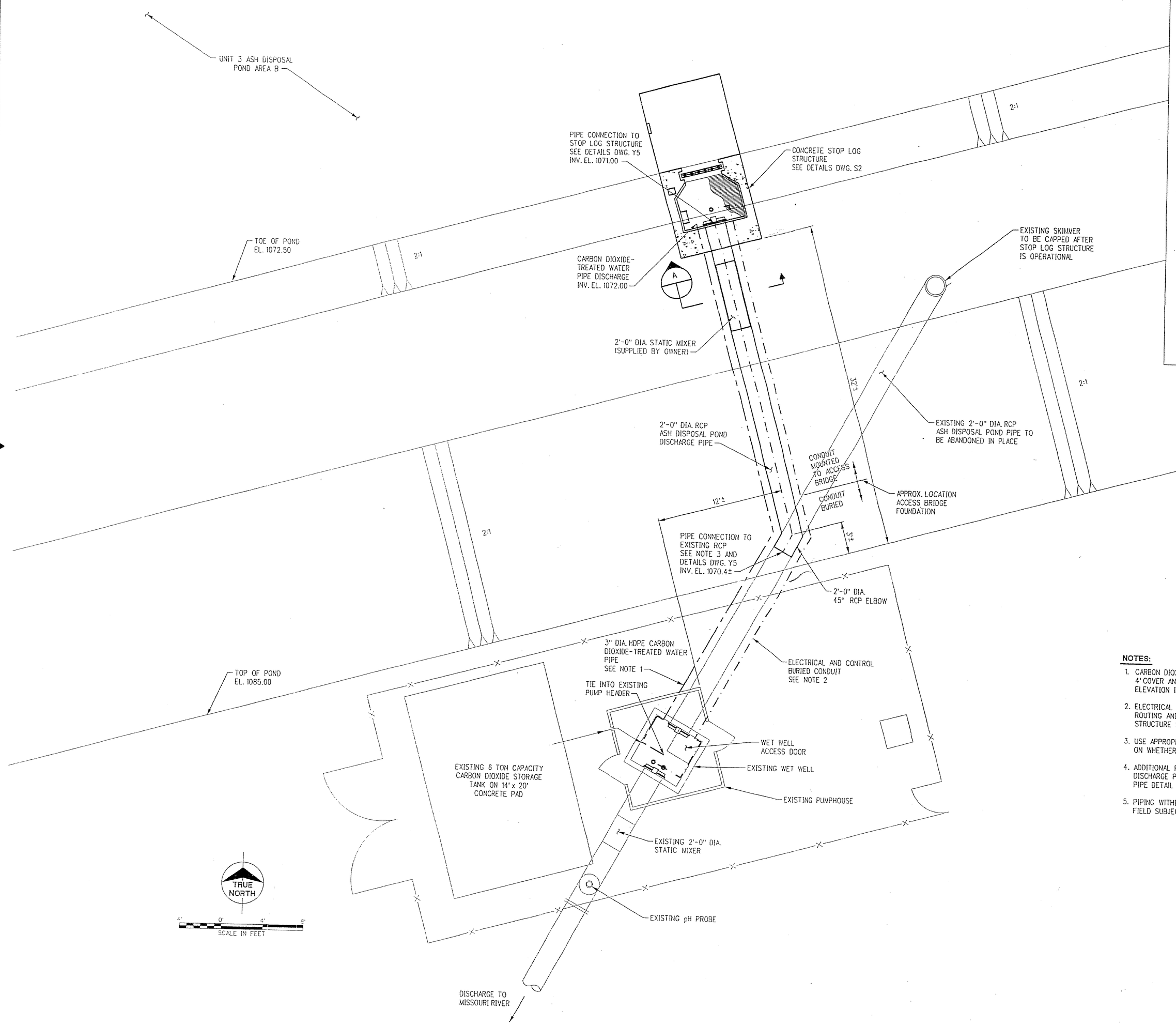

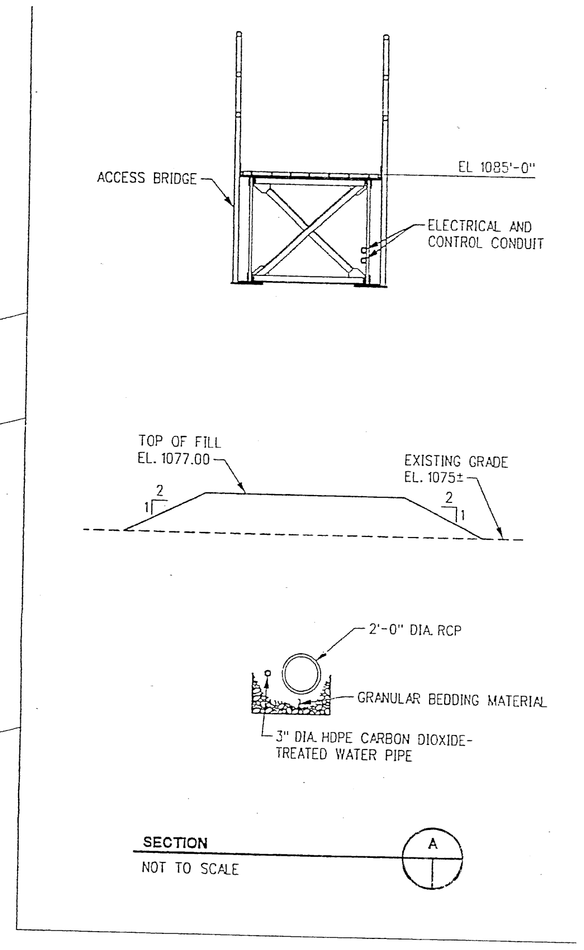

NOTES:

1. CARBON DIOXIDE-TREATED WATER PIPE SHALL BE INSTALLED TO MAINTAIN MINIMUM 4' COVER AND SHALL BE FIELD ROUTED TO DISCHARGE LOCATION AND INVERT ELEVATION INDICATED.
2. ELECTRICAL AND CONTROL BURIED CONDUIT SHALL MAINTAIN MINIMUM 4' COVER. ROUTING AND MOUNTING OF CONDUITS TO ACCESS BRIDGE AND STOP LOG STRUCTURE SHALL BE COORDINATED BETWEEN ENGINEER AND CONTRACTOR.
3. USE APPROPRIATE PIPE CONNECTION TO EXISTING RCP DETAIL ON DWG. Y5 DEPENDING ON WHETHER EXISTING RCP IS BELL AND SPIGOT OR TONGUE AND GROOVE PIPE.
4. ADDITIONAL FILL MATERIAL IS REQUIRED ABOVE 2'-0" DIA RCP ASH DISPOSAL POND DISCHARGE PIPE NEAR STOP LOG STRUCTURE. SEE SOIL LINER FILL GRADING ABOVE PIPE DETAIL DWG. Y5.
5. PIPING WITHIN STOP LOG STRUCTURE AND EXISTING WET WELL SHALL BE ROUTED IN FIELD SUBJECT TO ENGINEER APPROVAL.

REGISTERED PROFESSIONAL ENGINEER RANDELL L. SEDLACEK 16384 IOWA

I hereby certify that this engineering document was prepared by me or under my direct supervision and that I am a duly licensed Professional Engineer under the laws of the State of Iowa.

Randell L. Sedlacek 3/16/04

My license renewal date is December 31, 2005.
Pages or sheets covered by this seal:
This Drawing only.

no.	date	by	revision
0	3/10/04	JWG	ISSUED FOR BID

Burns & McDonnell

date JANUARY 13, 2004	detailed D. MADDOCK
designed J. GANDER	checked R.L.S.

MidAmerican ENERGY

NEAL NORTH STATION
UNIT 3 ASH POND
DISCHARGE IMPROVEMENTS

ASH POND DISCHARGE STRUCTURE CONSTRUCTION
PIPE AND DUCT BANK PLAN

project 34784	contract 100
drawing Y3	rev. 0
sheet of	sheets

COPYRIGHT © 2004 BY BURNS & McDONNELL ENGINEERING COMPANY, INC.

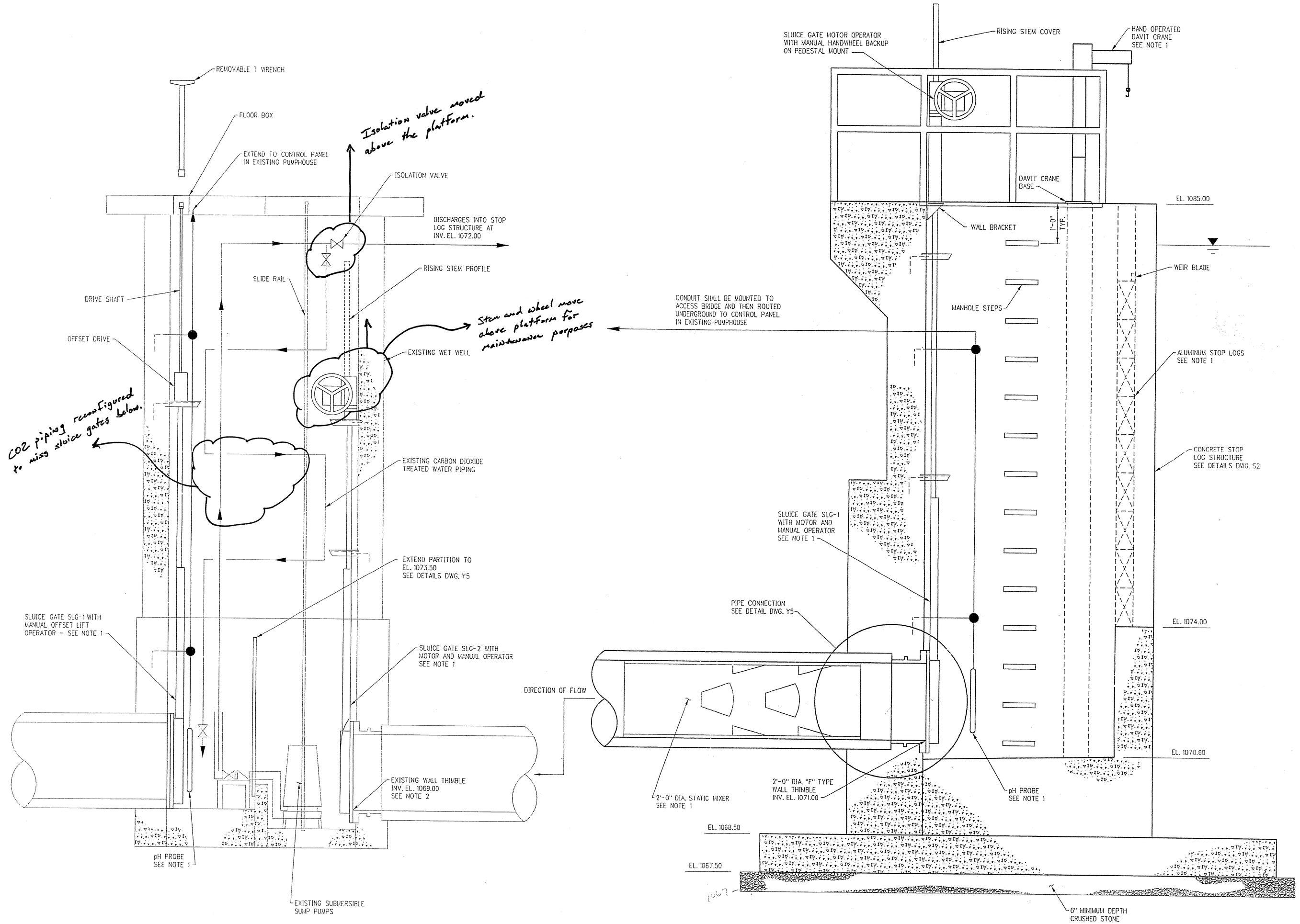

NOTES:

1. ALL SLUICE GATES, STOP LOGS, STATIC MIXER, WALL THIMBLE, DAVIT CRANE, AND pH PROBES AND ALL ACCESSORIES SHALL BE SUPPLIED BY OWNER AND SHALL BE INSTALLED ACCORDING TO MANUFACTURER'S RECOMMENDATIONS.
2. CONTRACTOR SHALL DRILL THROUGH EXISTING WALL THIMBLE IF NECESSARY TO ANCHOR SLUICE GATE SLG-2 TO EXISTING WET WELL CONCRETE WALL.
3. MOUNTING LOCATION OF pH PROBES AND ASSOCIATED CONDUIT AND BRACKETS SHALL BE COORDINATED WITH ENGINEER.
4. MOUNTING LOCATION OF DAVIT CRANE BASE SHALL ALLOW LIFTING CABLE TO BE PERPENDICULAR TO AND CENTERED ON TOP OF STOP LOGS WHEN CRANE ARM IS IN HORIZONTAL POSITION.

COPYRIGHT © 2004 BY BURNS & McDONNELL ENGINEERING COMPANY, INC.

c:\temp\Energy.tbl

no.	date	by	revision
0	3/10/04	JWG	ISSUED FOR BID

Burns & McDonnell
SINCE 1898

date JANUARY 22, 2004	detailed D. MADDOCK
designed J. GANDER	checked R.L.S.

MidAmerican ENERGY

NEAL NORTH STATION
UNIT 3 ASH POND
DISCHARGE IMPROVEMENTS

ASH POND DISCHARGE STRUCTURE CONSTRUCTION
EXISTING WET WELL AND STOP LOG STRUCTURE
GENERAL LAYOUT

project 34784	contract 100
drawing Y4	rev. 0
sheet of	sheets

file u:\MIDAMER\34784\CADD\CIVIL\mid4.dgn

LICENSED PROFESSIONAL ENGINEER RANDELL L. SEDLACEK 16384 IOWA

I hereby certify that this engineering document was prepared by me or under my direct supervision and that I am a duly licensed Professional Engineer under the laws of the State of Iowa.

Randell L. Sedlacek 3/10/04
Randell L. Sedlacek

My license renewal date is December 31, 2005.
Pages or sheets covered by this seal:
This Drawing only.

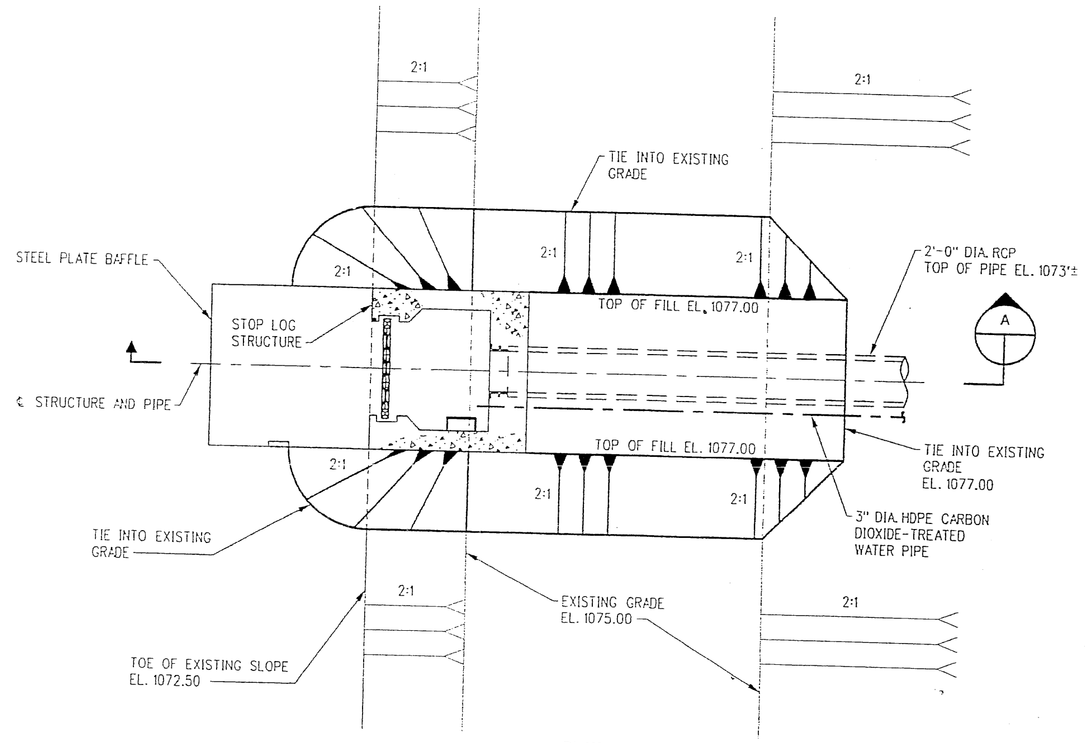

PLAN

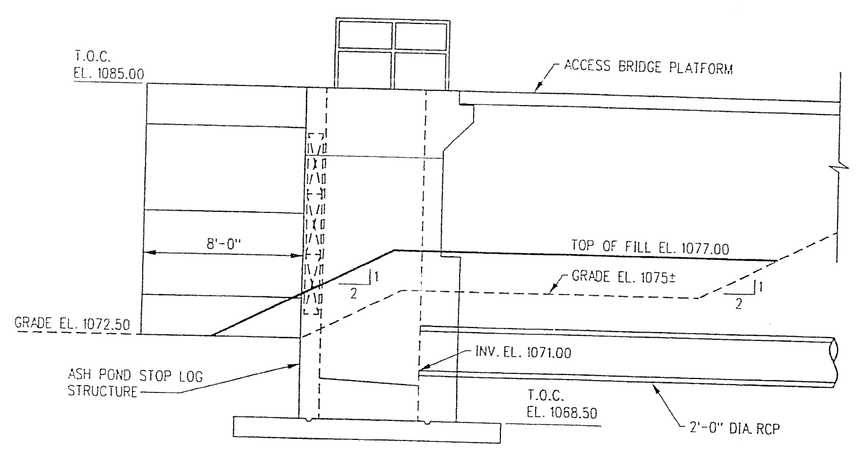

SECTION A

SOIL LINER GRADING ABOVE PIPE DETAIL

SCALE IN FEET

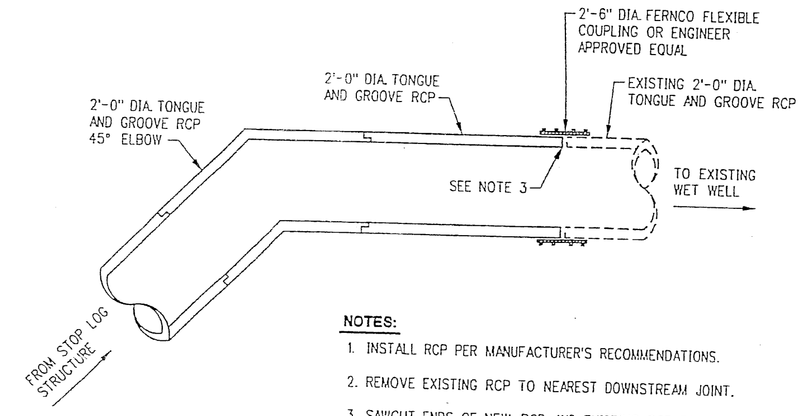

NOTES:

1. INSTALL RCP PER MANUFACTURER'S RECOMMENDATIONS.
2. REMOVE EXISTING RCP TO NEAREST DOWNSTREAM JOINT.
3. SAWCUT ENDS OF NEW RCP AND EXISTING RCP TO PROVIDE SMOOTH TRANSITION.

PIPE CONNECTION TO EXISTING RCP
TONGUE AND GROOVE ALTERNATIVE
NOT TO SCALE

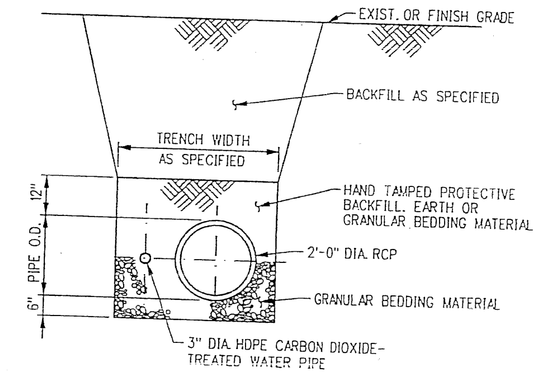

PIPE TRENCH
NOT TO SCALE

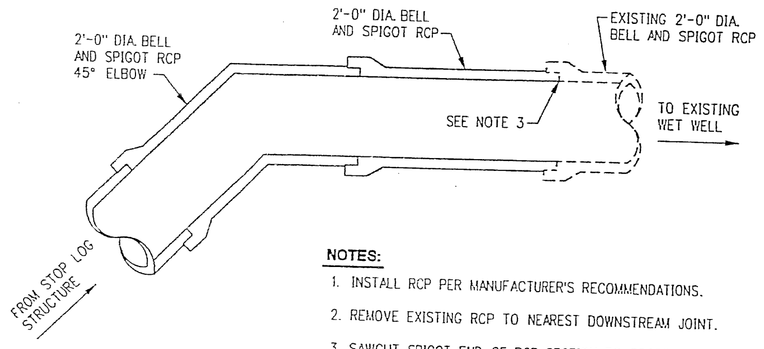

NOTES:

1. INSTALL RCP PER MANUFACTURER'S RECOMMENDATIONS.
2. REMOVE EXISTING RCP TO NEAREST DOWNSTREAM JOINT.
3. SAWCUT SPIGOT END OF RCP SECTION TO PROPER LENGTH TO PROVIDE SMOOTH TRANSITION FROM NEW RCP TO EXISTING RCP.

PIPE CONNECTION TO EXISTING RCP
BELL AND SPIGOT ALTERNATIVE
NOT TO SCALE

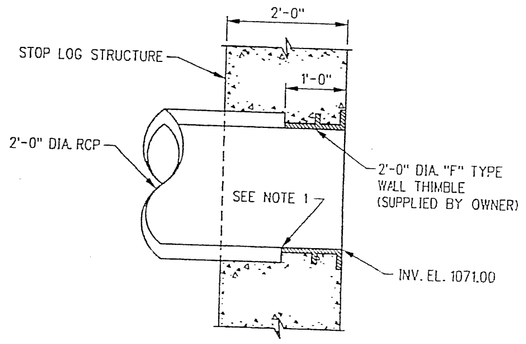

NOTE:

1. RCP SHALL BE BUTTED UP TO WALL THIMBLE TO MAINTAIN FLUSH PIPE INVERT FLOW LINE. GAPS BETWEEEN WALL THIMBLE AND RCP SHALL BE FILLED WITH NON-SHRINK GROUT.
2. SEE DWG. S2 FOR REINFORCING DETAILS.

PIPE CONNECTION TO STOP LOG STRUCTURE DETAIL
NOT TO SCALE

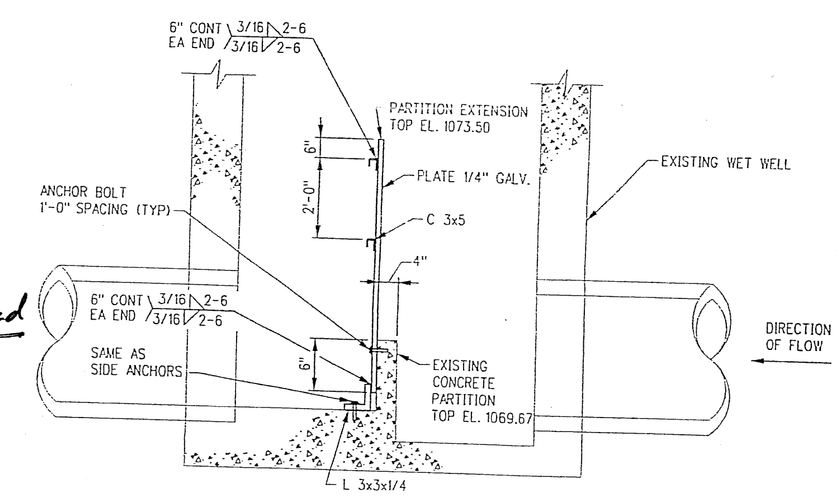

ELEVATION VIEW

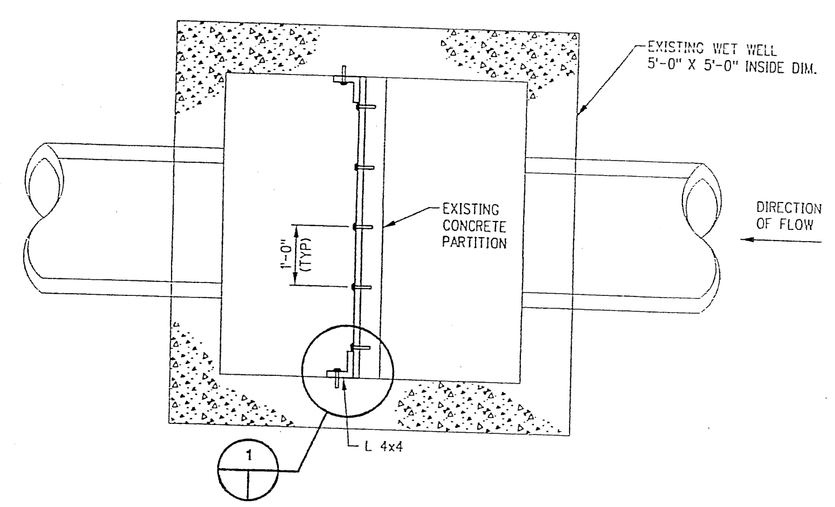

PLAN VIEW

NOTES:

1. PARTITION EXTENSION SHALL BE 1/4" THICK GALVANIZED STEEL.
2. NEOPRENE SEALS SHALL BE PLACED IN CONNECTIONS BETWEEN PARTITION EXTENSION AND EXISTING CONCRETE PARTITION AND SIDE WALLS.

PARTITION EXTENSION DETAIL
NOT TO SCALE

Not installed

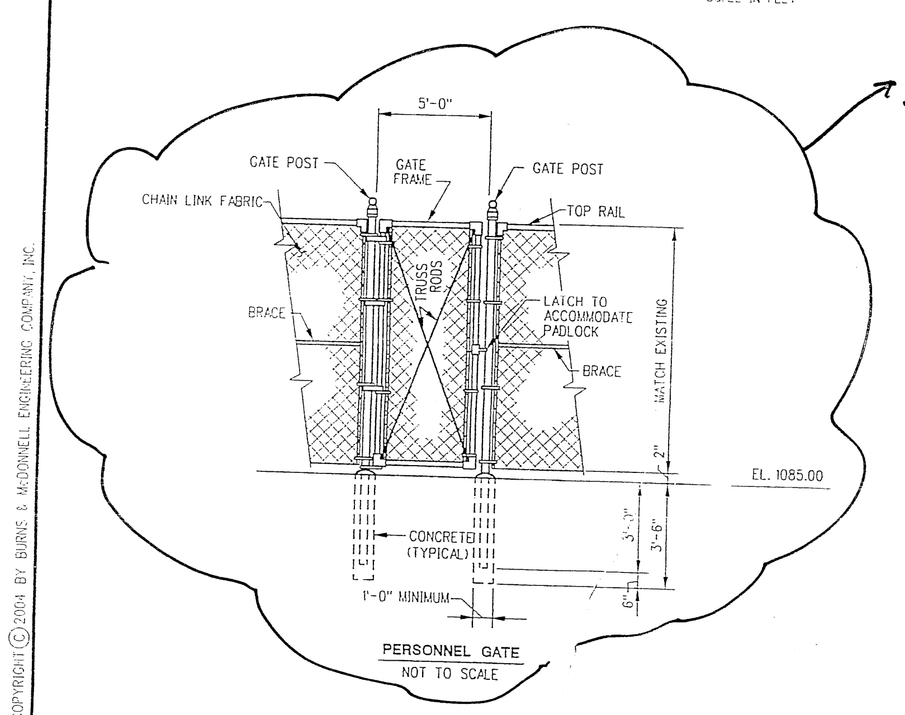

PERSONNEL GATE
NOT TO SCALE

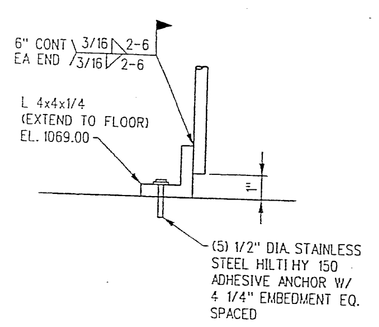

DETAIL 1
NOT TO SCALE

no.	date	by	revision
0	5/10/04	JWG	ISSUED FOR BID

Burns & McDonnell

date JANUARY 8, 2004	detailed D. MADDOCK
designed J. GANDER	checked R.L.S.

MidAmerican ENERGY

NEAL NORTH STATION
UNIT 3 ASH POND
DISCHARGE IMPROVEMENTS

ASH POND DISCHARGE STRUCTURE CONSTRUCTION
GENERAL DETAILS

project 34784	contract 100
drawing Y5	rev. 0
sheet	of sheets

file G:\NIDAGER\34784\CADD\CIVIL\mdg5.dgn

LICENSED PROFESSIONAL ENGINEER RANDELL L. SEDLACEK 16384 IOWA

I hereby certify that this engineering document was prepared by me or under my direct supervision and that I am a duly licensed Professional Engineer under the laws of the State of Iowa.

Randell L. Sedlacek 5/10/04

Randell L. Sedlacek

My license renewal date is December 31, 2005.
Pages or sheets covered by this seal:
This Drawing only.

COPYRIGHT © 2004 BY BURNS & McDONNELL ENGINEERING COMPANY, INC.

no.	date	by	revision
0	3/10/04	SRG	ISSUED FOR BID

GENERAL NOTES AND ABBREVIATIONS: (APPLICABLE TO ALL DRAWINGS)

1. ITEMS WHICH ARE TO BE FURNISHED AND INSTALLED BY SEPARATE CONTRACTS ARE IDENTIFIED AND LABELED FOR EACH CONTRACT.
2. SPLICES AT FLOOR SLAB (UNLESS NOTED OTHERWISE):
   TOP BARS - NEAR MID SPAN
   BOT BARS - OVER SUPPORTS
3. CONCRETE COVER FOR REINFORCING (UNLESS NOTED OTHERWISE):
   A. CAST AGAINST AND PERMANENTLY EXPOSED TO EARTH = 3"
   B. EXPOSED TO EARTH OR WEATHER:
      #6 THRU #18 BARS = 2"
      #5 BARS, 5/8" WIRE AND SMALLER = 1 1/2"
   C. NOT EXPOSED TO EARTH OR WEATHER:
      1. SLABS, WALLS AND JOISTS
         #8 AND LARGER BARS = 1 1/2"
         #6 AND #7 BARS = 1"
         #5 AND SMALLER BARS = 3/4"
      2. BEAMS, GIRDERS AND COLUMNS:
         PRINCIPAL REINFORCEMENT, TIES, STIRRUPS AND SPIRALS = 1 1/2"
4. MINIMUM CLEAR SPACING BETWEEN PARALLEL BARS IN A LAYER INCLUDING SPLICE BARS, SHALL NOT BE LESS THAN:
   A. FOR COLUMNS & PEDESTALS:
      1. THE DIAMETER OF THE BAR TIMES 1.5
      2. 1 1/2"
      3. 1.33 TIMES THE MAXIMUM AGGREGATE SIZE.
   B. FOR ALL OTHER BARS:
      1. THE DIAMETER OF THE BAR
      2. 1"
      3. 1.33 TIMES THE MAXIMUM AGGREGATE SIZE.
5. CONCRETE REINFORCING DEVELOPMENT AND LAP SPLICE LENGTHS, HOOKED BAR EMBEDMENT LENGTHS, AND CONCRETE REINFORCING DETAILS FOR WALL CORNERS AND INTERSECTIONS AS SHOWN ON THIS DRAWING ARE APPLICABLE TO ALL DRAWINGS UNLESS OTHERWISE INDICATED.

REINFORCING DEVELOPMENT AND SPLICES
f'c=4000psi

BAR SIZE	DEVELOPMENT LENGTH		SPLICE LENGTH	
	OTHER	TOP	OTHER	TOP
#3	1'-3"	1'-7"	1'-7"	2'-0"
#4	1'-7"	2'-1"	2'-1"	2'-8"
#5	2'-0"	2'-7"	2'-7"	3'-4"
#6	2'-5"	3'-1"	3'-1"	4'-0"
#7	3'-6"	4'-6"	4'-6"	5'-10"
#8	4'-0"	5'-2"	5'-2"	6'-8"
#9	4'-6"	5'-10"	5'-10"	7'-7"
#10	5'-1"	6'-7"	6'-7"	8'-6"
#11	5'-7"	7'-3"	7'-3"	9'-5"

DEVELOPMENT LENGTHS HOOKED BARS (f'c = 4000psi)

BAR SIZE	LENGTH OR MIN. EMBEDMENT
#3	7"
#4	10"
#5	1'-0"
#6	1'-3"
#7	1'-5"
#8	1'-7"
#9	1'-10"
#10	2'-0"
#11	2'-3"

TYPICAL REINFORCING NOTES:

1. REINFORCING BAR DEVELOPMENT AND LAP SPLICE LENGTHS SHALL BE AS SHOWN IN THESE TABLES UNLESS OTHERWISE NOTED ON THE DRAWINGS.
2. THE LENGTHS SHOWN IN THE TABLES ARE BASED ON THE FOLLOWING CONCRETE COVERAGE AND REINFORCING C-C SPACING:
   BEAMS OR COLUMNS: COVER ≥ 1.0bd (BAR DIAMETER)
   CENTER TO CENTER (C-C) SPACING ≥ 2.0bd.
   ALL OTHERS: COVER ≥ 1.0bd
   CENTER TO CENTER SPACING ≥ 3.0bd.
3. TOP BARS ARE DEFINED AS HORIZONTAL REINFORCEMENT PLACED SUCH THAT MORE THAN 12" OF FRESH CONCRETE IS CAST IN THE MEMBER BELOW THE DEVELOPMENT LENGTH OR SPLICE.
4. THE DEVELOPMENT AND SPLICE LENGTHS SHOWN SHALL NOT APPLY IF ANY OF THE FOLLOWING CONDITIONS OCCUR:
   A) f'c < 4000 psi
   B) fy > 60,000 psi
   C) THE COVER OR C-C BAR SPACING IS NOT AS LISTED ABOVE.
   D) THE REINFORCING STEEL IS EPOXY COATED.
   E) LIGHT WEIGHT CONCRETE IS USED.
5. CENTER TO CENTER SPACING (S) IS DEFINED AS BELOW

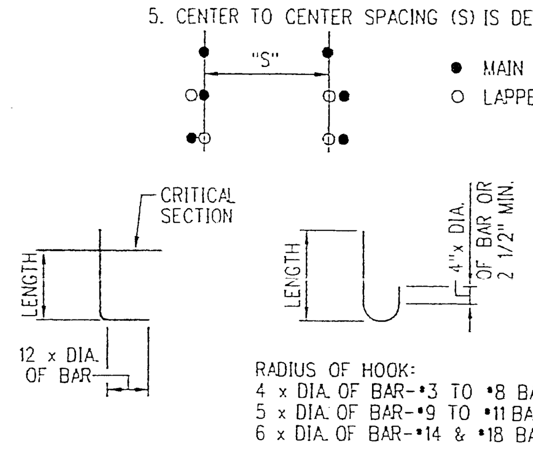

RADIUS OF HOOK:
4 x DIA. OF BAR-#3 TO #8 BARS
5 x DIA. OF BAR-#9 TO #11 BARS
6 x DIA. OF BAR-#14 & #18 BARS

DEVELOPMENT LENGTH NOTES:

1. WHERE DWGS. ARE DETAILED SIMILAR TO DETAIL 2, EXTEND THE EMBEDMENT LENGTH SUCH THAT THE HOOKED BAR CONTACTS THE LAYER OF MAIN REINFORCING SHOWN.
2. EMBEDMENT LENGTHS IN CHART ARE TYPICAL EXCEPT AS NOTED IN DETAIL 2, OR AS INDICATED ON DRAWINGS.

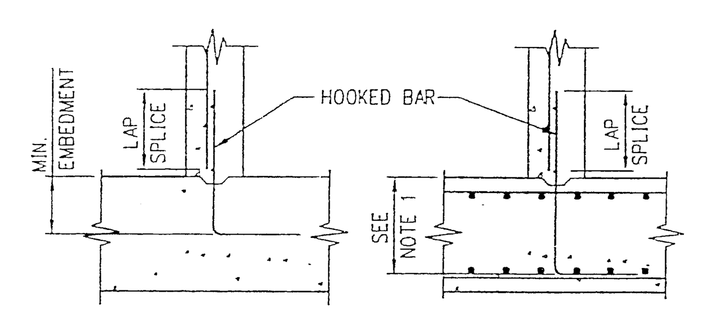

DETAIL 1 DETAIL 2

TYPICAL REINFORCING DEVELOPMENT AND SPLICES

D = BOLT DIAMETER
K = THREADS (2D+2" SINGLE NUT)
THREADS (3D+2" DOUBLE NUTS)
P = BOLT PROJECTION

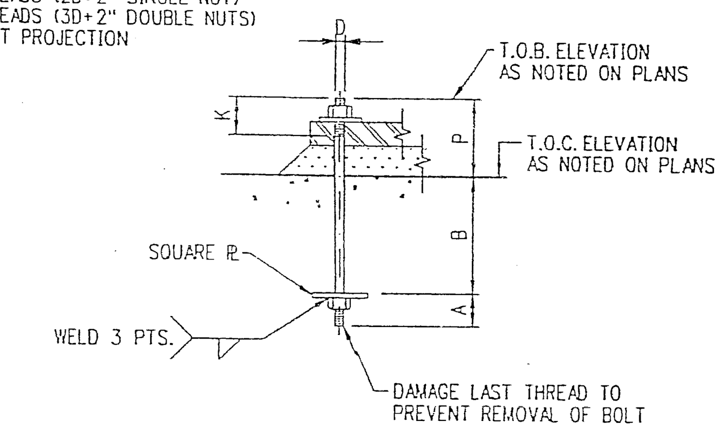

SCHEDULE

D	A	B	SQUARE PL	REMARKS
5/8"	2"	8"	PL 1/2x2 1/2 SQ.	
3/4"	2"	10"	PL 1/2x3 SQ.	
7/8"	3"	1'-0"	PL 5/8x3 1/2 SQ.	
1"	3"	1'-2"	PL 5/8x3 1/2 SQ.	
1 1/8"	3"	1'-4"	PL 3/4x4 SQ.	
1 1/4"	3"	1'-6"	PL 3/4x4 1/2 SQ.	
1 3/8"	4"	1'-8"	PL 7/8x5 SQ.	
1 1/2"	4"	1'-10"	PL 7/8x5 1/2 SQ.	
1 3/4"	4"	2'-0"	PL 1x6 SQ.	
2"	4"	2'-2"	PL 1 1/4x7 SQ.	
2 1/4"	5"	2'-4"	PL 1 1/2x7 1/2 SQ.	
2 1/2"	6"	2'-6"	PL 1 3/4x8 1/2 SQ.	
2 3/4"	6"	2'-9"	PL 2x9 1/2 SQ.	
3"	7"	3'-0"	PL 2 1/4x10 SQ.	

TYPE II ANCHOR BOLT
UNSLEEVED BOLT

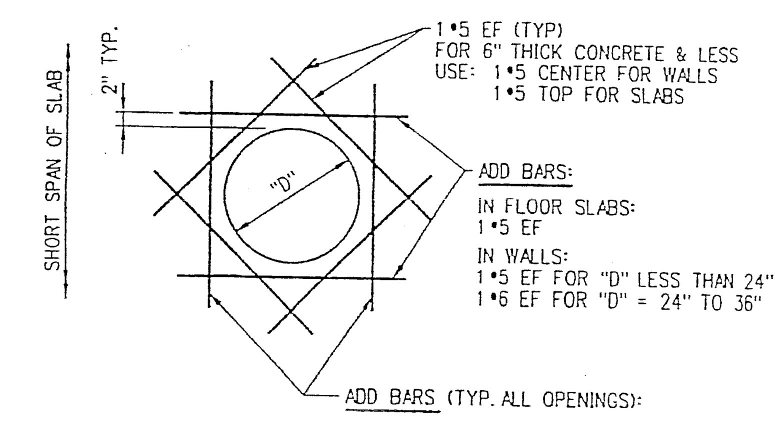

CO-1
UNSLEEVED OPENING

NOTES:

1. MINIMUM LENGTH OF ALL BARS SHALL BE "D" + 3'-6" WITH BARS CENTERED ON OPENING.
2. FOR OPENINGS LESS THAN 12" IN DIAMETER, THE ADD BARS ARE NOT REQUIRED IF NO REINFORCING IS CUT BY THE OPENING.
3. SHORT SPAN OF SLAB = LESSER DISTANCE BETWEEN SUPPORT MEMBERS.
4. REINFORCE OPENINGS WITH "D" LARGER THAN 3'-0" AS INDICATED ON THE DRAWINGS. IF NOT INDICATED, CONTACT THE ENGINEER.
5. FOR CONCRETE OPENINGS THROUGH STEEL DECKING, BLOCK OUT CONCRETE WITHIN OPENING WITH STYROFOAM OR OTHER APPROVED MATERIAL AND SEAL WITH DUCT TAPE. CUT DECK TO MATCH INSIDE DIMENSION OF OPENING AFTER CONCRETE HAS SET FOR 7 DAYS.
6. METAL DECKING HOLES AND OPENINGS SHALL NOT BE CUT UNTIL IMMEDIATELY PRIOR TO BEING PERMANENTLY FILLED WITH THE EQUIPMENT OR STRUCTURE INTENDED TO FULLFILL ITS SPECIFIC USE OR SHALL BE IMMEDIATELY COVERED. SEE OSHA SECTION 29CFR1926 SUBPART R.
7. REINFORCING SHOWN REPRESENTS THE MINIMUM REQUIRED AT ALL CO-1 OPENINGS UNLESS OTHERWISE NOTED.

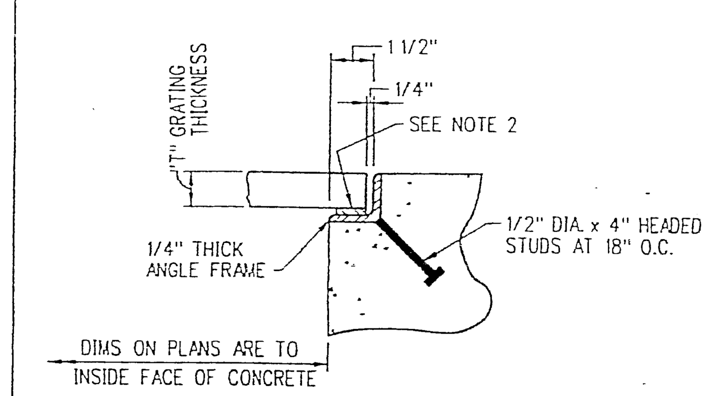

DIMS ON PLANS ARE TO INSIDE FACE OF CONCRETE

CE-7

NOTES:

1. MITER, WELD AND GRIND SMOOTH ANGLE FRAME AT CORNERS.
2. WELD CONTINUOUS BAR TO ANGLE AS SHOWN WHEN NECESSARY TO BRING GRATING UP FLUSH WITH CURB ANGLE FRAME.
   OPTION: DELETE CONTINUOUS BAR, TRIM ANGLE AT TOP AS REQUIRED.

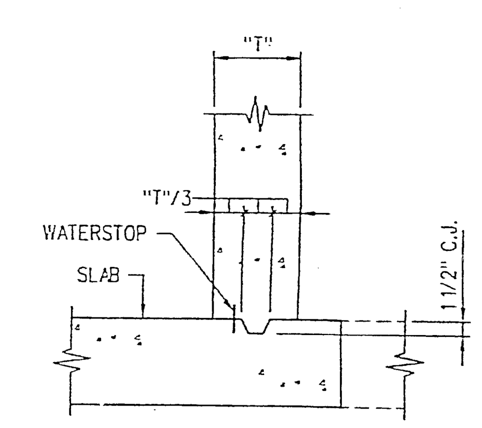

CJ-1 WITH WATERSTOP
CJ-2 WITHOUT WATERSTOP
"T"≤ 30"

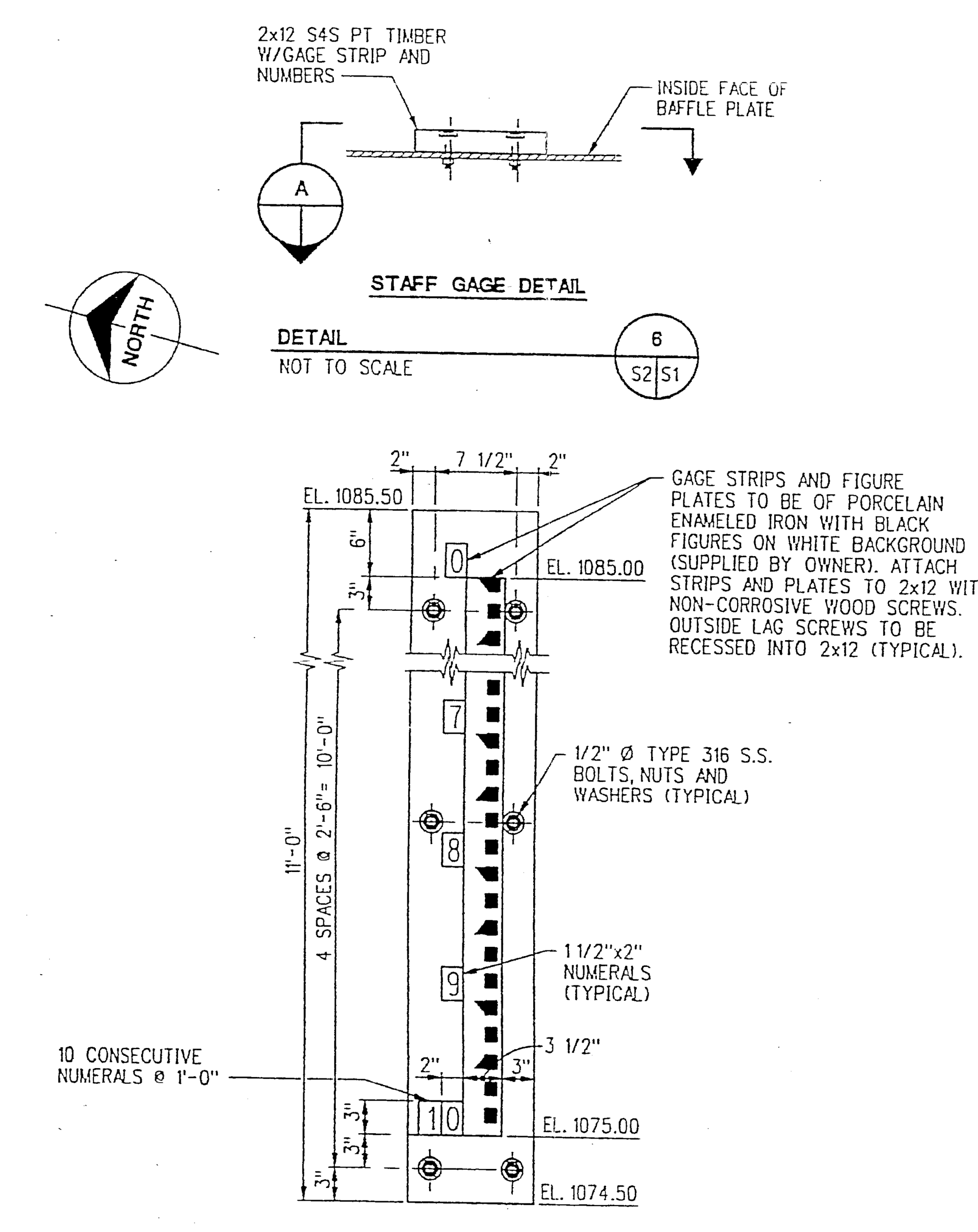

STAFF GAGE DETAIL

DETAIL (6 / S2 S1)
NOT TO SCALE

SECTION (A)
NOT TO SCALE

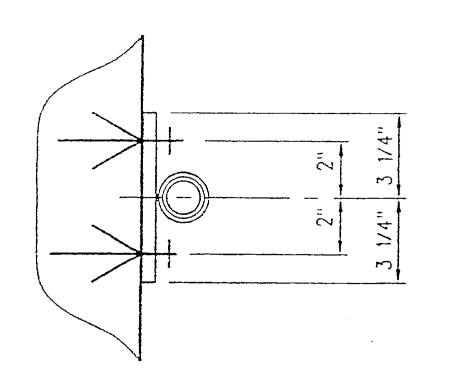

PLAN

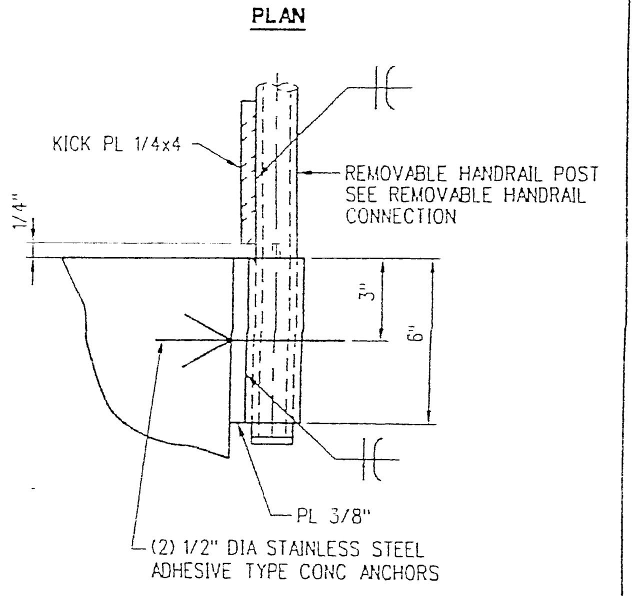

SECTION

CE-17
REMOVABLE HANDRAIL DETAIL

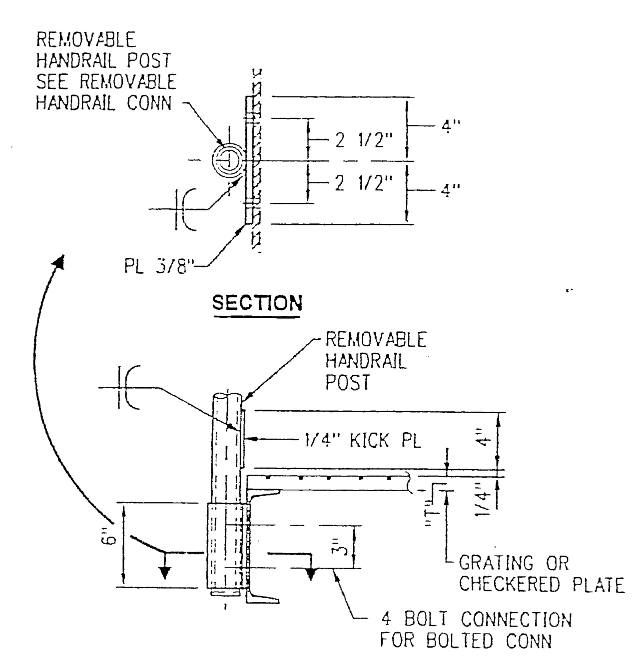

3E-13
REMOVABLE HANDRAIL

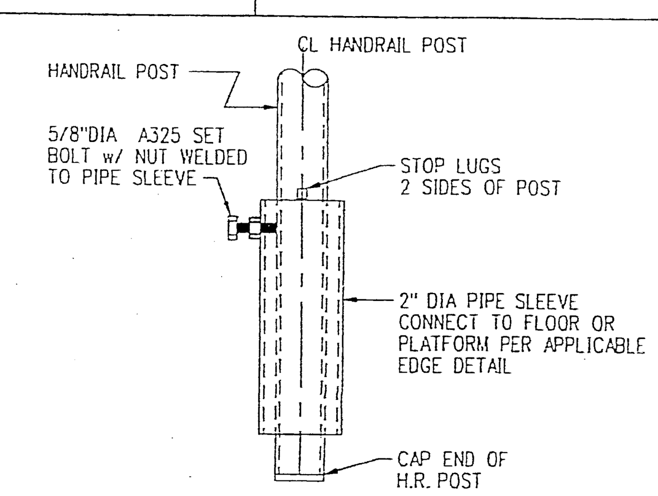

NOTE
USE WHERE HANDRAIL IS INDICATED AS "REMOVABLE" ON PLANS.

REMOVABLE HANDRAIL CONNECTION
(NOT TO SCALE)

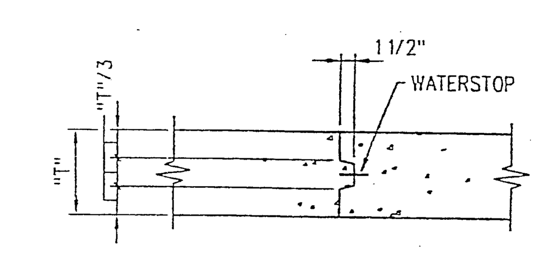

CJ-6 WITH WATERSTOP
CJ-7 WITHOUT WATERSTOP
"T"≤ 30"

NOTE:
USE FOR VERTICAL AND HORIZONTAL JOINTS.

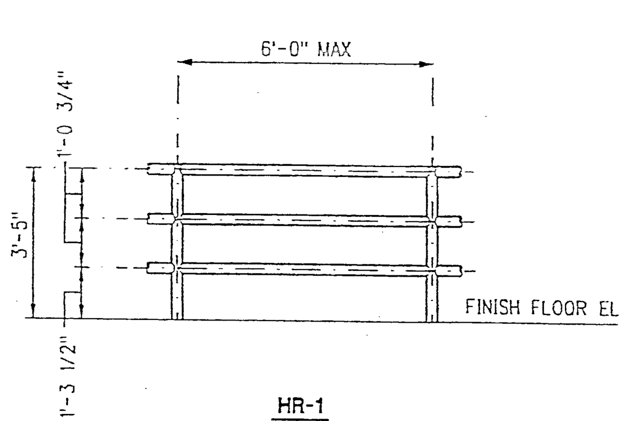

HR-1

GENERAL NOTES:

1. ALL CHANNELS, ANGLES, AND STRUCTURAL PLATES SHALL CONFORM TO ASTM A36.
2. ALL HANDRAIL SHALL CONFORM TO ASTM A53, TYPE E OR S, GRADE B OR ASTM A106 GRADE B. ALL HANDRAIL SHALL BE 1 1/2" NOMINAL (1.9" OD) DIA, BLACK STANDARD WT PIPE.
3. ALL STRUCTURAL STEEL, HANDRAIL, HANDRAIL COMPONENTS, BOLTS AND BAR JOISTS TO BE HOT-DIP GALVANIZED AFTER FABRICATION.
4. ALL GRATING TO BE 1 1/4" SERRATED, GALVANIZED, AND CONFORMING TO ASTM A569 AND NAAMM MBE 531. MAIN BEARING BARS TO BE 3/16" AND SPACED NOT MORE THAN 1 3/16" O.C. CROSS BARS SHALL BE SPACED AT NOT MORE THAN 4" O.C. ALL GRATING SHALL BE REMOVABLE.
5. ALL WELDS TO USE E70XX ELECTRODES IN ACCORDANCE WITH AWS D1.1.
6. FABRICATE ALL STEEL TO CONFORM TO AISC SPECIFICATIONS, CODES, AND STANDARDS.
7. CONCRETE SHALL HAVE A MINIMUM 28 DAY COMPRESSIVE STRENGTH OF 4000 PSI. TYPE II PORTLAND CEMENT CONFORMING TO ASTMC150 WITH A TRICALCIUM ALUMINATE CONTENT OF 5% OR LESS SHALL BE USED.
8. REINFORCING SHALL CONFORM TO ASTM A615 GRADE 60.

LICENSED PROFESSIONAL ENGINEER RANDELL L SEDLACEK 16384 IOWA

I hereby certify that this engineering document was prepared by me or under my direct supervision and that I am a duly licensed Professional Engineer under the laws of the State of Iowa.
Randell L. Sedlacek [signature] 3/10/04
My license renewal date is December 31, 2005.
Pages or sheets covered by this seal:
This Drawing only.

Burns & McDonnell

date	2-5-04	detailed	K. SCHAMBERGER
designed	A. FARRELL	checked	NJE

MidAmerican ENERGY

NEAL NORTH STATION
UNIT 3 ASH POND
DISCHARGE IMPROVEMENTS

ASH POND DISCHARGE STRUCTURE CONSTRUCTION
STANDARD DETAILS

project	34784	contract	100
drawing	S1 — 0	rev.	
sheet		of	sheets

file MIDS01.DGN / 3-10-2004 10:24 / KJS

COPYRIGHT © 2004 BY BURNS & McDONNELL ENGINEERING COMPANY, INC.

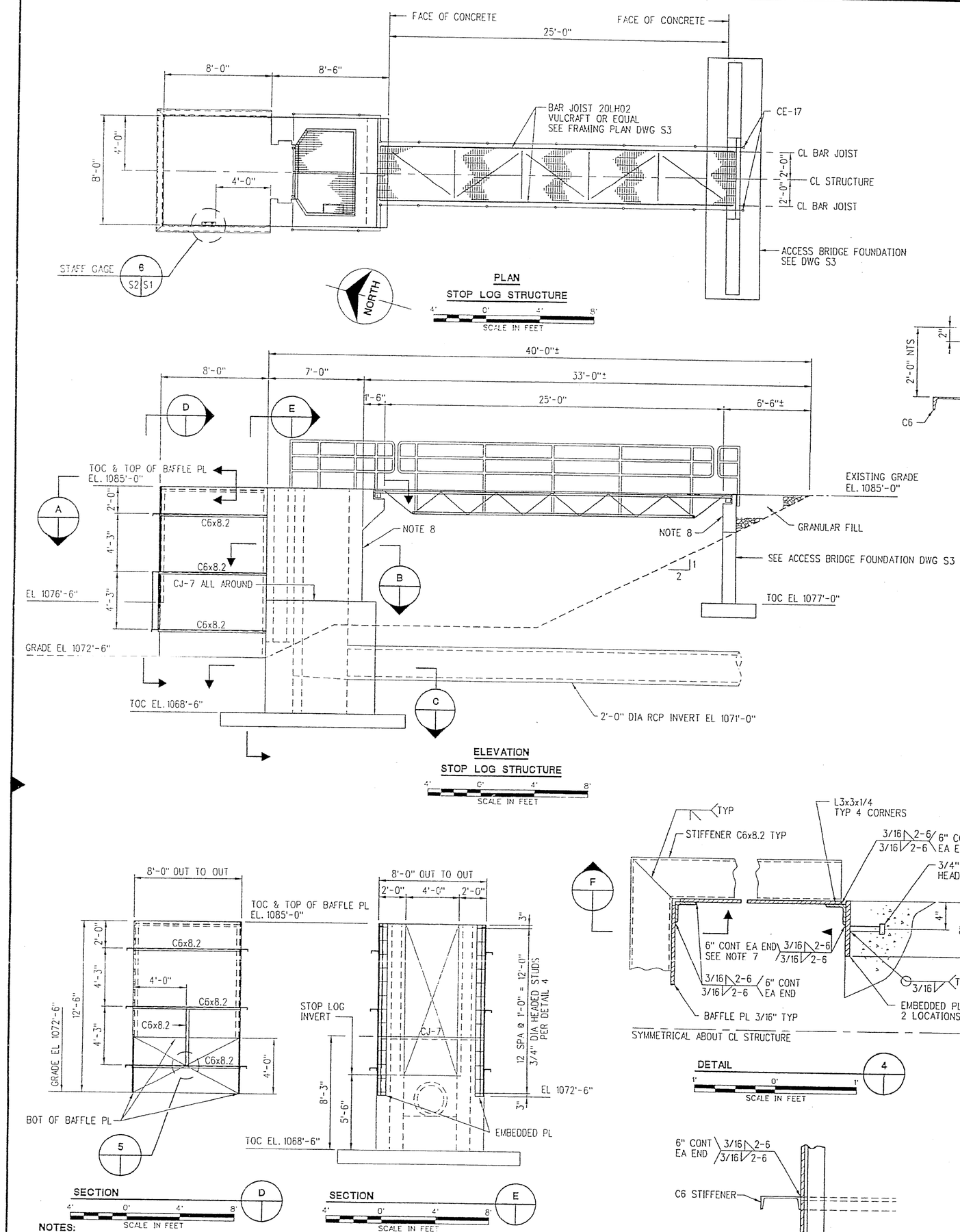

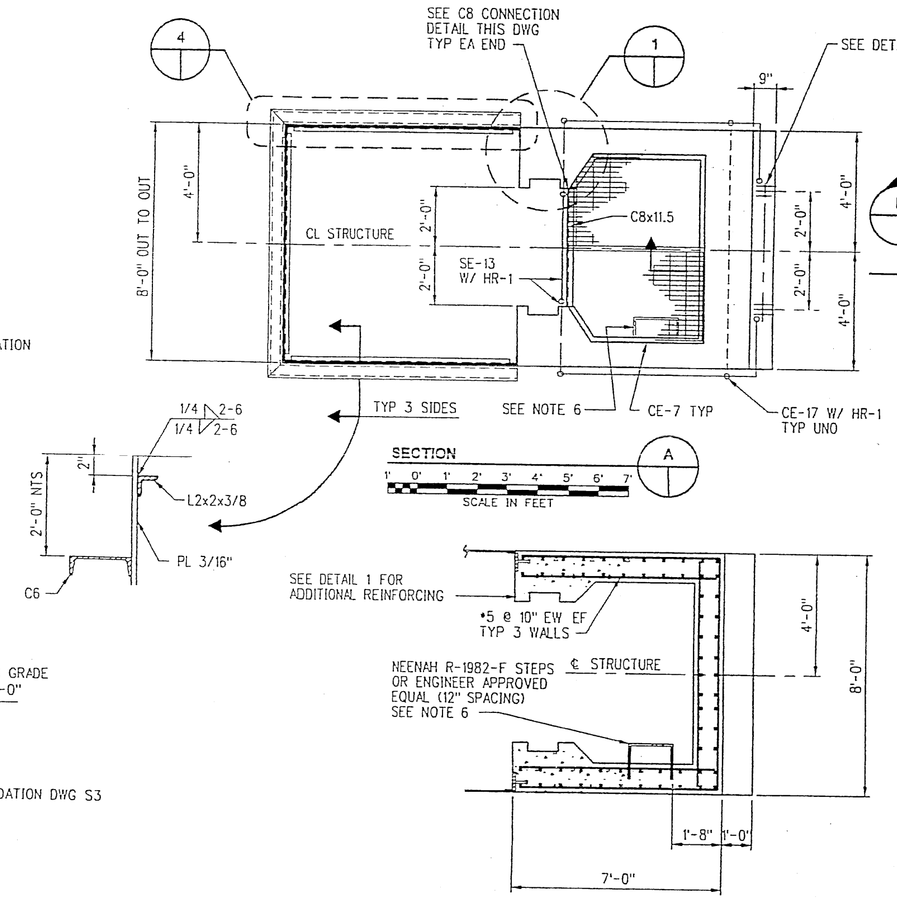

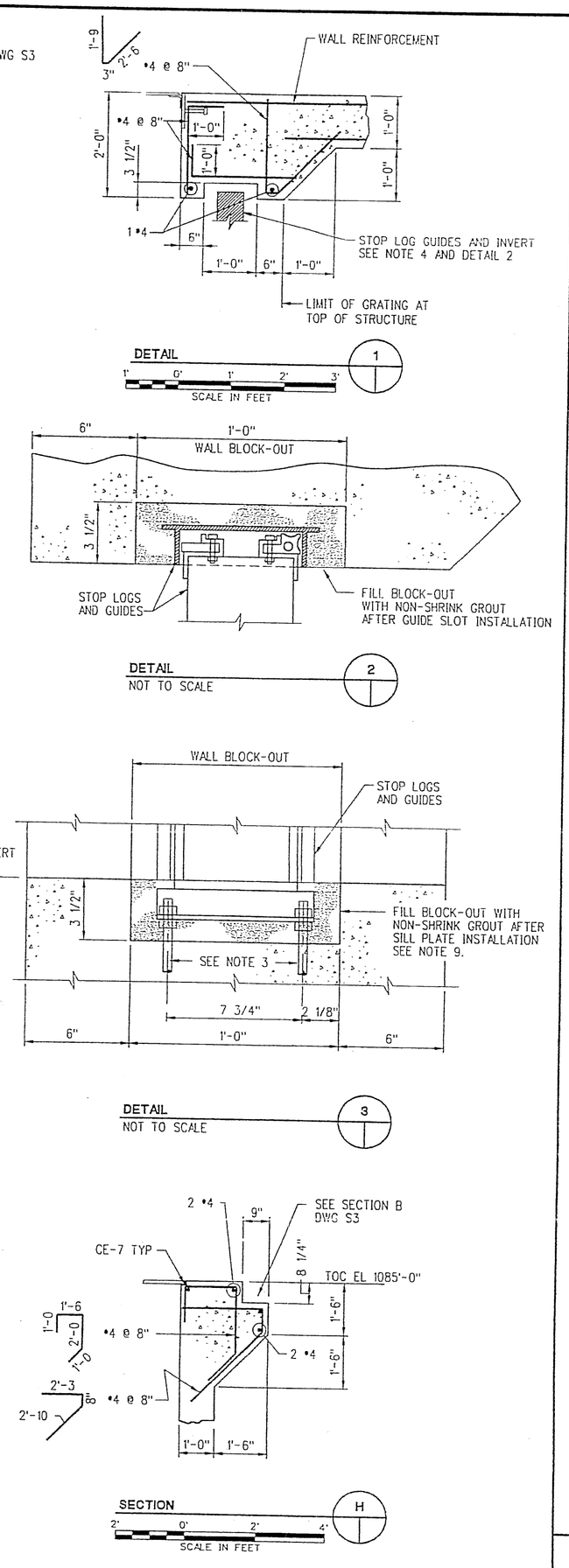

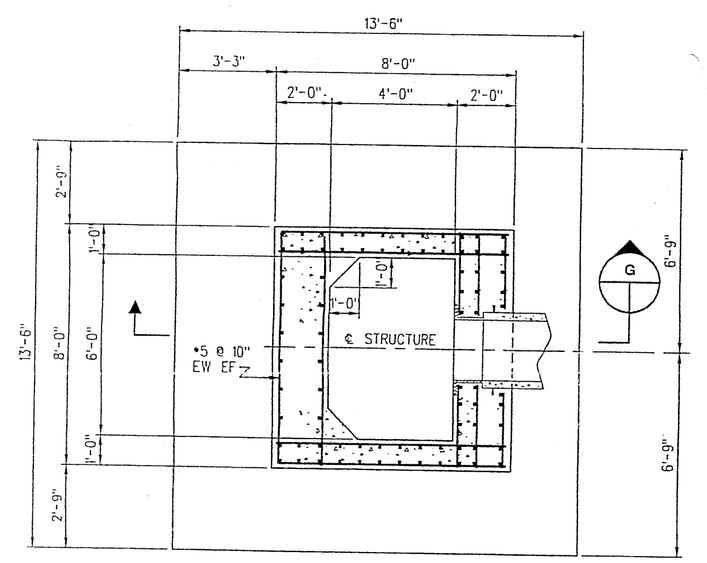

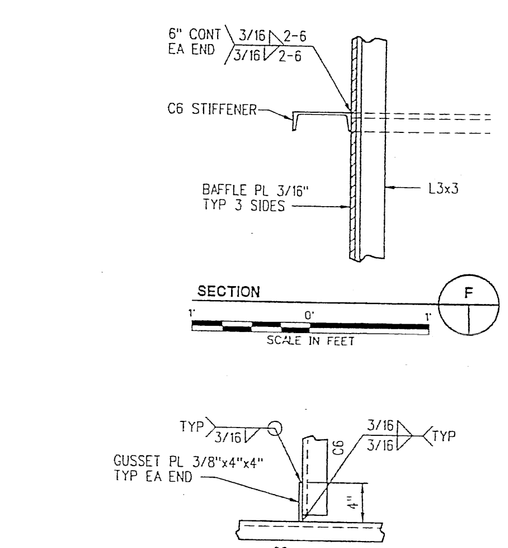

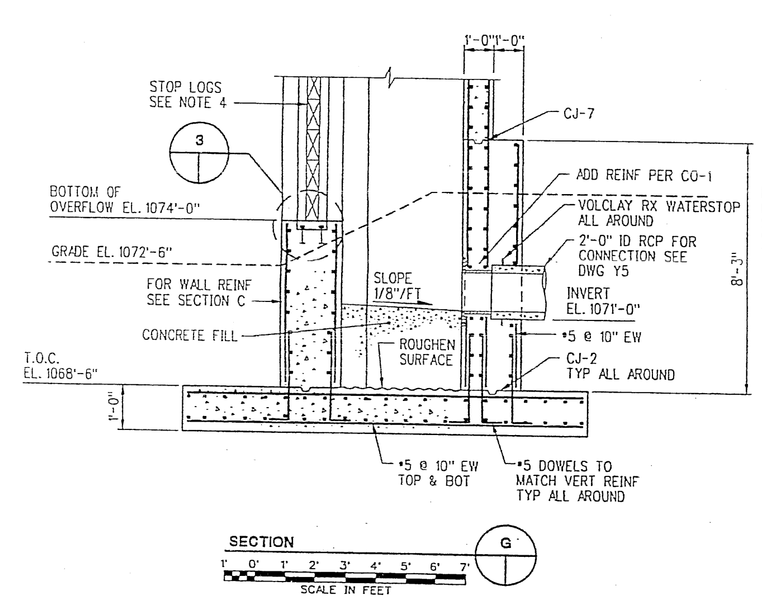

NOTES:

1. FOR STANDARD DETAILS, SEE DWG. S1.
2. FOR ADDITIONAL STOP LOG STRUCTURE DETAILS SEE DWG S3.
3. CONCRETE ANCHORS BY STOP LOG VENDOR.
4. STOP LOGS SHALL BE 48" LONG x 12" HIGH x 5" THICK EXTRUDED ALUMINUM AS MANUFACTURED BY HYDRO GATE COMPANY (SUPPLIED BY OWNER). INSTALLATION OF STOP LOGS, GUIDES, INVERT, AND NEOPRENE, SEALS SHALL BE AS REQUIRED BY MANUFACTURER. CONCRETE BLOCK-OUTS SHALL BE GROUTED WITH NON-SHRINK GROUT SUCH AS MASTERFLOW 928 OR ENGINEER APPROVED EQUAL.
5. A DAVIT CRANE SHALL BE INSTALLED AT TOP OF STOP LOG STRUCTURE FOR REMOVAL OF STOP LOGS. CRANE SHALL BE MODEL 5122MGAL DAVIT CRANE WITH MODEL 522GAL CRANE BASE AS MANUFACTURED BY THERN (SUPPLIED BY OWNER). CRANE SHALL BE ANCHORED TO TOP OF STRUCTURE WITH HILTI HY150 ADHESIVE ANCHOR SYSTEM OR ENGINEER APPROVED EQUAL (UTILIZING STAINLESS STEEL ANCHORS). DAVIT CRANE SHALL BE FIELD LOCATED AND MOUNTED SUCH THAT LIFTING CABLE IS CENTERED ON AND VERTICALLY PERPENDICULAR TO STOP LOGS WHEN CRANE ARM IS FULLY EXTENDED HORIZONTALLY.
6. A COMPLETE FALL PREVENTION DEVICE SUCH AS SAF-T-CLIMB INCLUDING RAIL, CLAMPS, SLEEVE, SAF-T-MOUNT SECTION, BY NORTH CONSUMER PRODUCTS, SAFETY PRODUCT DIVISION OR ENGINEER APPROVED EQUAL. ALL METAL COMPONENTS SHALL BE TYP 304 STAINLESS STEEL.
7. ALL FIELD WELDS TO BE COATED W/ SPRAY-ON COLD GALVANIZING METAL COATING.
8. PROVIDE ELECTRICAL CONDUIT PENETRATIONS AS REQ'D. FIELD LOCATE.
9. NON SHRINK GROUT SHALL CONFORM TO ASTM 1107, GRADE A. GROUT SHALL BE NON METALLAIC, AS MANUFACTURED BY FIVE STAR PRODUCTS, INC. - FIVE STAR GROUT.

COPYRIGHT © 2004 BY BURNS & McDONNELL ENGINEERING COMPANY, INC.

c:\temp\default.tbl

no.	date	by	revision
0	3-10-04	SRG	ISSUED FOR BID

Burns & McDonnell

date	detailed
2-5-04	K. SCHAMBERGER
designed	checked
A. FARRELL	NJE

MidAmerican ENERGY

NEAL NORTH STATION
UNIT 3 ASH POND
DISCHARGE IMPROVEMENTS

ASH POND DISCHARGE STRUCTURE CONSTRUCTION
STOP LOG STRUCTURE
DETAILS

project	contract
34784	100
drawing	rev.
S2 — 0	
sheet	of sheets

file MIDS02.DGN / 3-10-2004 10:24 / KJS

RANDELL L. SEDLACEK 16384 IOWA

I hereby certify that this engineering document was prepared by me or under my direct supervision and that I am a duly licensed Professional Engineer under the laws of the State of Iowa.

Randell L. Sedlacek

My license renewal date is December 31, 2005.
Pages or sheets covered by this seal:
This Drawing only.

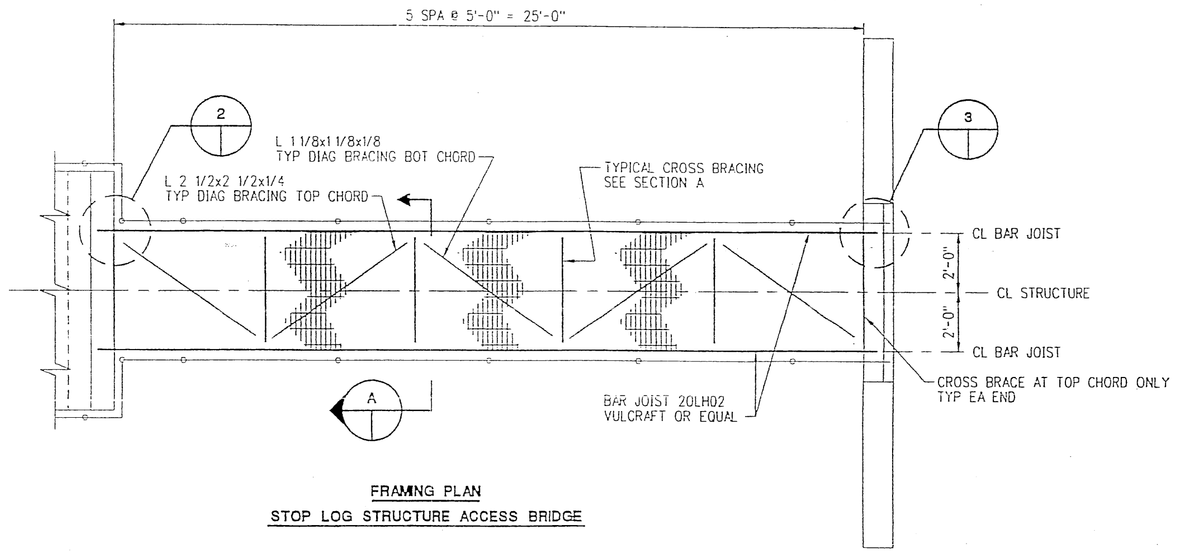

FRAMING PLAN
STOP LOG STRUCTURE ACCESS BRIDGE

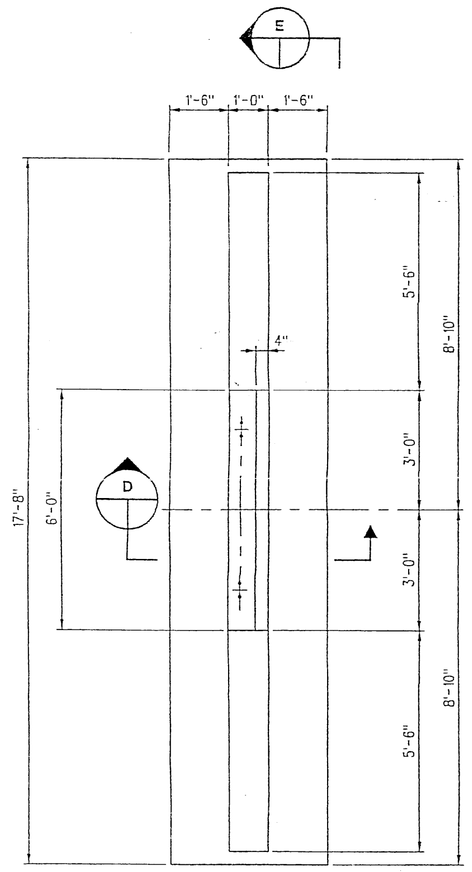

PLAN
ACCESS BRIDGE FOUNDATION
2' 0' 2' 4'
SCALE IN FEET

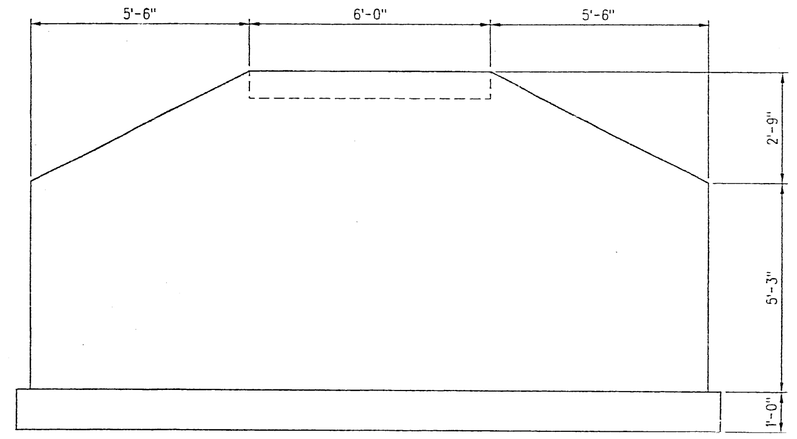

SECTION E
2' 0' 2' 4'
SCALE IN FEET

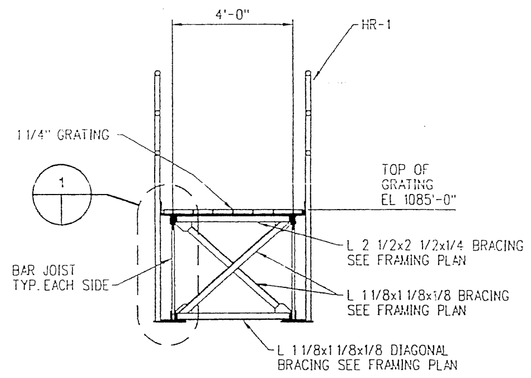

SECTION A

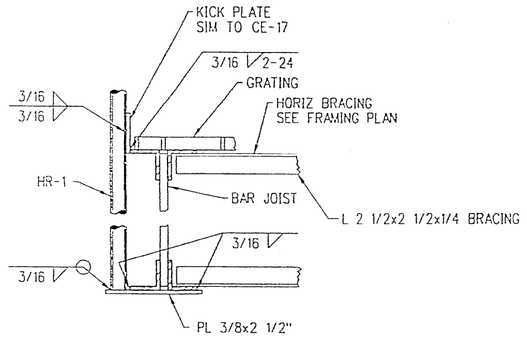

DETAIL 1

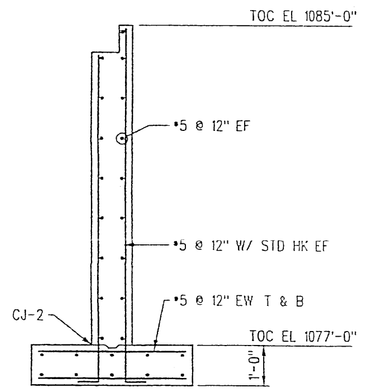

SECTION D
2' 0' 2' 4'
SCALE IN FEET

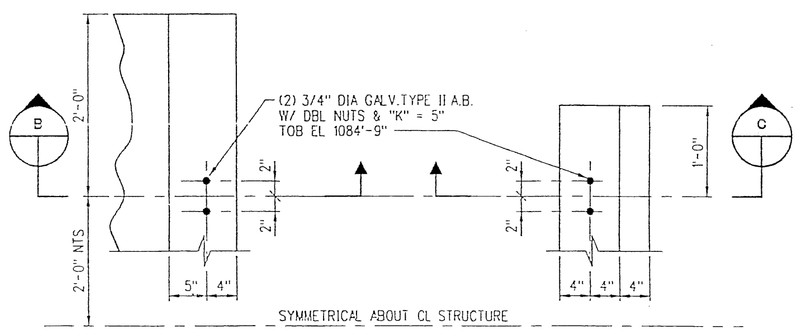

DETAIL 2

DETAIL 3

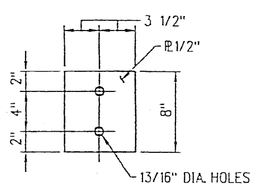

PLAN
JOIST BASE PLATE

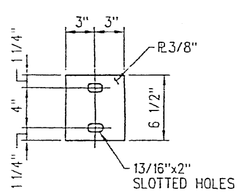

PLAN
JOIST BEARING PLATE
(PART OF BAR JOIST)

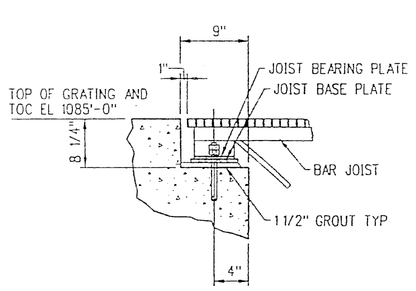

SECTION B

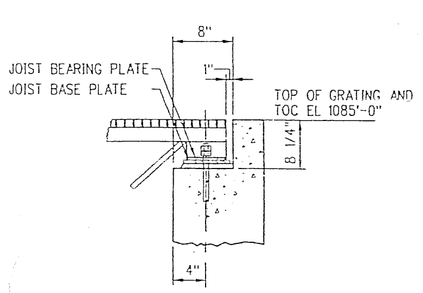

SECTION C

NOTES:

1. FOR STANDARD DETAILS AND GENERAL NOTES SEE DWG S1.
2. FOR ADDITIONAL STOP LOG STRUCTURE DETAILS SEE DWG S2.

LICENSED PROFESSIONAL ENGINEER
RANDELL L. SEDLACEK
16384
IOWA

I hereby certify that this engineering document was prepared by me or under my direct supervision and that I am a duly licensed Professional Engineer under the laws of the State of Iowa.

Randell L. Sedlacek 3/10/04
Randell L. Sedlacek

My license renewal date is December 31, 2005.
Pages or sheets covered by this seal:
This Drawing only.

no.	date	by	revision
0	3-10-04	SRG	ISSUED FOR BID

Burns & McDonnell
SINCE 1917

date 2-5-04	detailed K. SCHAMBERGER
designed A. FARRELL	checked NJE

MidAmerican ENERGY

NEAL NORTH STATION
UNIT 3 ASH POND
DISCHARGE IMPROVEMENTS

ASH POND DISCHARGE STRUCTURE CONSTRUCTION

ACCESS BRIDGE AND
ACCESS BRIDGE FOUNDATION DETAILS

project 34784	contract 100
drawing S3 —	rev. 0
sheet of	sheets

file MIDS03.DGN / 3-10-2004 10:24 / KJS

COPYRIGHT © 2004 BY BURNS & McDONNELL ENGINEERING COMPANY, INC.

c:\temp\default.tbl

APPENDIX D

5) Geotek Report of Soil Test Borings at Pond 1 outside slope ash berm

GEOTEK ENGINEERING
& TESTING SERVICES, INC.
909 East 50th Street North
Sioux Falls, South Dakota 57104
605-335-5512 Fax 605-335-0773

September 30, 2010

MidAmerican Energy Company
Neal South Central Storeroom
2761 Port Neal Circle
Sergeant Bluff, Iowa 51054

Attn: Jeff Schultzen

Subj: Soil Test Borings
Ash Pond Area
MidAmerican Energy Neal North Facility
Near Sergeant Bluff, Iowa
GeoTek #10-B81

This correspondence presents our written report of the soil test borings for the referenced project. We performed our work in accordance with purchase order number 274448 dated September 17, 2010.

We performed three (3) soil test borings at the site on September 28, 2010. The boring locations were staked by MidAmerican Energy Company and were on top of the west berm of the existing ash pond. Boring #1 was to the south, boring #2 was in the center and boring #3 was to the north.

The borings extended to a depth of 11 feet below existing ground surface. The attached boring logs illustrate the subsurface conditions encountered at the test locations. The subsurface conditions at other times and locations at the site may differ from those found at our test boring locations.

If you have any questions regarding this report, please contact our office at (605) 335-5512.

Respectfully Submitted,
GeoTek Engineering & Testing Services, Inc.

Jeff Christensen, P.E.
Geotechnical Manager

GEOTEK ENGINEERING
& TESTING SERVICES, INC.
909 E. 50th Street North
Sioux Falls, SD 57104
605-335-5512 Fax 605-335-0773
www.geotekeng.com

GEOTECHNICAL TEST BORING LOG

GEOTEK # **10-B81** BORING NO. **1 (1 of 1)**

PROJECT **Soil Borings, Ash Pond Area, MidAmerican Energy Neal North Facility, Near Sergeant Bluff, IA**

DEPTH in FEET	DESCRIPTION OF MATERIAL	GEOLOGIC ORIGIN	N	WL	SAMPLE NO.	SAMPLE TYPE	WC	D	LL	PL	QU
	FILL, MOSTLY BOTTOM ASH AND COAL DUST: black, moist	FILL			1	HSA					
			2		2	SPT					
4½	**FILL, MOSTLY SAND**: fine grained, brown, moist	FILL									
			4		3	SPT					
			3		4	SPT					
			7		5	SPT					
11	Bottom of borehole at 11 feet.										

WATER LEVEL MEASUREMENTS

DATE	TIME	SAMPLED DEPTH	CASING DEPTH	CAVE-IN DEPTH	WATER LEVEL
9-28-05	10:54 am	11	--	8	none
--	--	--	--	--	--
--	--	--	--	--	--
--	--	--	--	--	--

START 9-28-05 COMPLETE 9-28-05 10:54 am

METHOD
3.25" ID Hollow Stem Auger

CREW CHIEF Gordy Hawkey

GEOTEK ENGINEERING
& TESTING SERVICES, INC.
909 E. 50th Street North
Sioux Falls, SD 57104
605-335-5512 Fax 605-335-0773
www.geotekeng.com

GEOTECHNICAL TEST BORING LOG

GEOTEK # **10-B81** BORING NO. **2 (1 of 1)**

PROJECT **Soil Borings, Ash Pond Area, MidAmerican Energy Neal North Facility, Near Sergeant Bluff, IA**

DEPTH in FEET	DESCRIPTION OF MATERIAL	GEOLOGIC ORIGIN	N	WL	SAMPLE NO.	SAMPLE TYPE	WC	D	LL	PL	QU
	FILL, MOSTLY BOTTOM ASH AND COAL DUST: black, moist	FILL			1	HSA					
			2		2	SPT					
			4		3	SPT					
7	**FILL, MOSTLY SAND**: fine grained, brown, moist	FILL	4		4	SPT					
9½	**FILL, MIXTURE OF CLAY AND SAND**: brown, moist	FILL	9		5	SPT					
11	Bottom of borehole at 11 feet.										

WATER LEVEL MEASUREMENTS

DATE	TIME	SAMPLED DEPTH	CASING DEPTH	CAVE-IN DEPTH	WATER LEVEL
9-28-05	11:18 am	11	--	7	none
--	--	--	--	--	--
--	--	--	--	--	--
--	--	--	--	--	--

START 9-28-05 COMPLETE 9-28-05 11:18 am

METHOD
3.25" ID Hollow Stem Auger

CREW CHIEF Gordy Hawkey

GEOTEK ENGINEERING
& TESTING SERVICES, INC.
909 E. 50th Street North
Sioux Falls, SD 57104
605-335-5512 Fax 605-335-0773
www.geotekeng.com

GEOTECHNICAL TEST BORING LOG

GEOTEK # **10-B81** BORING NO. **3 (1 of 1)**

PROJECT **Soil Borings, Ash Pond Area, MidAmerican Energy Neal North Facility, Near Sergeant Bluff, IA**

DEPTH in FEET	DESCRIPTION OF MATERIAL	GEOLOGIC ORIGIN	N	WL	SAMPLE NO.	SAMPLE TYPE	WC	D	LL	PL	QU
	FILL, MOSTLY BOTTOM ASH AND COAL DUST: black, moist	FILL			1	HSA					
			3		2	SPT					
			4		3	SPT					
			5		4	SPT					
			2		5	SPT					
11	Bottom of borehole at 11 feet.										

WATER LEVEL MEASUREMENTS

DATE	TIME	SAMPLED DEPTH	CASING DEPTH	CAVE-IN DEPTH	WATER LEVEL
9-28-05	11:43 am	11	--	8	none
--	--	--	--	--	--
--	--	--	--	--	--
--	--	--	--	--	--

START 9-28-05 COMPLETE 9-28-05 11:43 am

METHOD
3.25" ID Hollow Stem Auger

CREW CHIEF Gordy Hawkey

SOIL CLASSIFICATION CHART

MAJOR DIVISIONS			SYMBOLS GRAPH	SYMBOLS LETTER	TYPICAL DESCRIPTIONS
COARSE GRAINED SOILS MORE THAN 50% OF MATERIAL IS LARGER THAN NO. 200 SIEVE SIZE	GRAVEL AND GRAVELLY SOILS MORE THAN 50% OF COARSE FRACTION RETAINED ON NO. 4 SIEVE	CLEAN GRAVELS (LITTLE OR NO FINES)		GW	WELL-GRADED GRAVELS, GRAVEL - SAND MIXTURES, LITTLE OR NO FINES
				GP	POORLY-GRADED GRAVELS, GRAVEL - SAND MIXTURES, LITTLE OR NO FINES
		GRAVELS WITH FINES (APPRECIABLE AMOUNT OF FINES)		GM	SILTY GRAVELS, GRAVEL - SAND - SILT MIXTURES
				GC	CLAYEY GRAVELS, GRAVEL - SAND - CLAY MIXTURES
	SAND AND SANDY SOILS MORE THAN 50% OF COARSE FRACTION PASSING ON NO. 4 SIEVE	CLEAN SANDS (LITTLE OR NO FINES)		SW	WELL-GRADED SANDS, GRAVELLY SANDS, LITTLE OR NO FINES
				SP	POORLY-GRADED SANDS, GRAVELLY SAND, LITTLE OR NO FINES
		SANDS WITH FINES (APPRECIABLE AMOUNT OF FINES)		SM	SILTY SANDS, SAND - SILT MIXTURES
				SC	CLAYEY SANDS, SAND - CLAY MIXTURES
FINE GRAINED SOILS MORE THAN 50% OF MATERIAL IS SMALLER THAN NO. 200 SIEVE SIZE	SILTS AND CLAYS	LIQUID LIMIT LESS THAN 50		ML	INORGANIC SILTS AND VERY FINE SANDS, ROCK FLOUR, SILTY OR CLAYEY FINE SANDS OR CLAYEY SILTS WITH SLIGHT PLASTICITY
				CL	INORGANIC CLAYS OF LOW TO MEDIUM PLASTICITY, GRAVELLY CLAYS, SANDY CLAYS, SILTY CLAYS, LEAN CLAYS
				OL	ORGANIC SILTS AND ORGANIC SILTY CLAYS OF LOW PLASTICITY
	SILTS AND CLAYS	LIQUID LIMIT GREATER THAN 50		MH	INORGANIC SILTS, MICACEOUS OR DIATOMACEOUS FINE SAND OR SILTY SOILS
				CH	INORGANIC CLAYS OF HIGH PLASTICITY
				OH	ORGANIC CLAYS OF MEDIUM TO HIGH PLASTICITY, ORGANIC SILTS
HIGHLY ORGANIC SOILS				PT	PEAT, HUMUS, SWAMP SOILS WITH HIGH ORGANIC CONTENTS

NOTE: DUAL SYMBOLS ARE USED TO INDICATE BORDERLINE SOIL CLASSIFICATIONS

BORING LOG SYMBOLS AND DESCRIPTIVE TERMINOLOGY

SYMBOLS FOR DRILLING AND SAMPLING

Symbol	Definition
Bag	Bag sample
CS	Continuous split-spoon sampling
DM	Drilling mud
FA	Flight auger; number indicates outside diameter in inches
HA	Hand auger; number indicates outside diameter in inches
HSA	Hollow stem auger; number indicates inside diameter in inches
LS	Liner sample; number indicates outside diameter of liner sample
N	Standard penetration resistance (N-value) in blows per foot
NMR	No water level measurement recorded, primarily due to presence of drilling fluid
NSR	No sample retrieved; classification is based on action of drilling equipment and/or material noted in drilling fluid or on sampling bit
SH	Shelby tube sample; 3-inch outside diameter
SPT	Standard penetration test (N-value) using standard split-spoon sampler
SS	Split-spoon sample; 2-inch outside diameter unless otherwise noted
WL	Water level directly measured in boring
▼	Water level symbol

SYMBOLS FOR LABORATORY TESTS

Symbol	Definition
WC	Water content, percent of dry weight; ASTM:D2216
D	Dry density, pounds per cubic foot
LL	Liquid limit; ASTM:D4318
PL	Plastic limit; ASTM:D4318
QU	Unconfined compressive strength, pounds per square foot; ASTM:D2166

DENSITY/CONSISTENCY TERMINOLOGY

Density Term	N-Value	Consistency Term
Very Loose	0-4	Soft
Loose	5-8	Firm
Medium Dense	9-15	Stiff
Dense	16-30	Very Stiff
Very Dense	Over 30	Hard

DESCRIPTIVE TERMINOLOGY

Term	Definition
Dry	Absence of moisture, powdery
Frozen	Frozen soil
Moist	Damp, below saturation
Waterbearing	Pervious soil below water
Wet	Saturated, above liquid limit
Lamination	Up to ½” thick stratum
Layer	½” to 6” thick stratum
Lens	½” to 6” discontinuous stratum

PARTICLE SIZES

Term	Particle Size
Boulder	Over 12”
Cobble	3” – 12”
Gravel	#4 – 3”
Coarse Sand	#10 – #4
Medium Sand	#40 – #10
Fine Sand	#200 – #40
Silt and Clay	passes #200 sieve

GRAVEL PERCENTAGES

Term	Range
A trace of gravel	2-4%
A little gravel	5-15%
With gravel	16-50%