James M. Landreth
Vice President
Fossil Hydro Operations

SCE&G®
A SCANA COMPANY

June 1, 2011

Mr. Stephen Hoffman
US Environmental Protection Agency
Two Potomac Yard
2733 South Crystal Drive
5th Floor, N-5237
Arlington, VA 22202-2733

Subject: South Carolina Electric & Gas Company
Urquhart Generating Station
Coal Combustion Residue Impoundment
Round 9 – Dam Assessment Report (April 2011)

Dear Mr. Hoffman:

South Carolina Electric & Gas Company (SCE&G) hereby files electronically our comments regarding the referenced Urquhart Generating Station Coal Combustion Residual Impoundment Round 9 – Dam Assessment Report (April 2011), including a revised water balance diagram (marked up and clean copy). This report was posted on your secured website link on May 5, 2011.

To address the recommendations regarding the maintenance and methods of operation, SCE&G has already implemented an action plan to add the downstream slope into the scope of its regular vegetation control program and to occasionally blade the crest of the embankment as necessary and minimize vehicular traffic on the crest.

If you have any questions about this filing, please contact Mr. William Argentieri at (803) 217-9162 or by email at bargentieri@scana.com.

Very truly yours,

James M. Landreth

Mr. James M. Landreth, Vice President
Fossil & Hydro Operations
South Carolina Electric & Gas Company
220 Operation Way
Mail Code A-221
Cayce, SC 29033

WRA/wa

Enclosures

c: M. C. Summer/W. R. Argentieri
T. N. Effinger/ J. C. Younan
D. D. Jerome/ J. K. Todd
Corporate Records

DRAFT

Coal Combustion Residue Impoundment
Round 9 - Dam Assessment Report

Urquhart Generating Station
Ash Ponds
South Carolina Electric & Gas
Beech Island, South Carolina

Prepared for:

United States Environmental Protection Agency
Office of Resource Conservation and Recovery

Prepared by:

Dewberry & Davis, LLC
Fairfax, Virginia

Under Contract Number: EP-09W001727
April 2011

DRAFT

INTRODUCTION, SUMMARY CONCLUSIONS AND RECOMMENDATIONS

The release of over five million cubic yards of coal combustion waste from the Tennessee Valley Authority's Kingston, Tennessee facility in December 2008 flooded more than 300 acres of land, damaging homes and property. In response, the U.S. EPA is assessing the stability and functionality of the coal combustion ash impoundments and other management units across the country and, as necessary, identifying any needed corrective measures.

This assessment of the stability and functionality of the Urquhart Generating Station is based on a review of available documents and on the site assessment conducted by Dewberry personnel on February 16, 2011. We found the supporting technical documentation adequate (Section 1.1.3). As detailed in Section 1.2.5, there are two recommendations based on field observations that may help to maintain a safe and trouble-free operation.

In summary, the Urquhart Generating Station is **SATISFACTORY** for continued safe and reliable operation, with no recognized existing or potential management unity safety deficiencies.

PURPOSE AND SCOPE

The U.S. Environmental Protection Agency (EPA) is embarking on an initiative to investigate the potential for catastrophic failure of Coal Combustion Surface Impoundments (i.e., management unit) from occurring at electric utilities in an effort to protect lives and property from the consequences of a dam failure or the improper release of impounded slurry. The EPA initiative is intended to identify conditions that may adversely affect the structural stability and functionality of a management unit and its appurtenant structures (if present); to note the extent of deterioration (if present), status of maintenance and/or a need for immediate repair; to evaluate conformity with current design and construction practices; and to determine the hazard potential classification for units not currently classified by the management unit owner or by a state or federal agency. The initiative will address management units that are classified as having a Less-than-Low, Low, Significant or High Hazard Potential ranking. (For Classification, see pp. 3-8 of the 2004 Federal Guidelines for Dam Safety)

In early 2009, the EPA sent its first wave of letters to coal-fired electric utilities seeking information on the safety of surface impoundments and similar facilities that receive liquid-borne material that store or dispose of coal combustion residue. This letter was issued under the authority of the Comprehensive Environmental Response, Compensation, and Liability Act (CERCLA) Section 104(e), to assist the Agency in assessing the structural stability and functionality of such management units, including which facilities should be visited to perform a safety assessment of the berms, dikes, and dams used in the construction of these impoundments.

DRAFT

EPA requested that utility companies identify all management units including surface impoundments or similar diked or bermed management units or management units designated as landfills that receive liquid-borne material used for the storage or disposal of residuals or by-products from the combustion of coal, including, but not limited to, fly ash, bottom ash, boiler slag, or flue gas emission control residuals. Utility companies provided information on the size, design, age and the amount of material placed in the units. The EPA used the information received from the utilities to determine preliminarily which management units had or potentially could have High Hazard Potential ranking.

The purpose of this report is **to evaluate the condition and potential of residue release from management units**. This evaluation included a site visit. Prior to conducting the site visit, a two-person team reviewed the information submitted to EPA, reviewed any relevant publicly available information from state or federal agencies regarding the unit hazard potential classification (if any) and accepted information provided via telephone communication with the management unit owner. Also, after the field visit, additional information was received by Dewberry & Davis LLC about the Urquhart ash ponds that was reviewed and used in preparation of this report.

Factors considered in determining the hazard potential classification of the management units(s) included the age and size of the impoundment, the quantity of coal combustion residuals or by-products that were stored or disposed of in these impoundments, its past operating history, and its geographic location relative to down gradient population centers and/or sensitive environmental systems.

This report presents the opinion of the assessment team as to the potential of catastrophic failure and reports on the condition of the management unit(s).

LIMITATIONS

The assessment of dam safety reported herein is based on field observations and review of readily available information provided by the owner/operator of the subject coal combustion residue management unit(s). Qualified Dewberry engineering personnel performed the field observations and review and made the assessment in conformance with the required scope of work and in accordance with reasonable and acceptable engineering practices. No other warranty, either written or implied, is made with regard to our assessment of dam safety.

DRAFT

Table of Contents

Page

INTRODUCTION, SUMMARY CONCLUSIONS AND RECOMMENDATIONS II

PURPOSE AND SCOPE II

1.0 CONCLUSIONS AND RECOMMENDATIONS 1-1

1.1 CONCLUSIONS 1-1
1.1.1 Conclusions Regarding the Structural Soundness of the Management Unit(s) 1-1
1.1.2 Conclusions Regarding the Hydrologic/Hydraulic Safety of the Management Unit(s) 1-1
1.1.3 Conclusions Regarding the Adequacy of Supporting Technical Documentation 1-1
1.1.4 Conclusions Regarding the Description of the Management Unit(s) 1-1
1.1.5 Conclusions Regarding the Field Observations 1-1
1.1.6 Conclusions Regarding the Adequacy of Maintenance and Methods of Operation 1-1
1.1.7 Conclusions Regarding the Adequacy of the Surveillance and Monitoring Program 1-2
1.1.8 Classification Regarding Suitability for Continued Safe and Reliable Operation 1-2
1.2 RECOMMENDATIONS 1-2
1.2.1 Recommendations Regarding the Maintenance and Methods of Operation 1-2
1.3 PARTICIPANTS AND ACKNOWLEDGEMENT 1-3
1.3.1 List of Participants 1-3
1.3.2 Acknowledgement and Signature 1-3

2.0 DESCRIPTION OF THE COAL COMBUSTION RESIDUE MANAGEMENT UNIT(S) 2-1

2.1 LOCATION AND GENERAL DESCRIPTION 2-1
2.2 COAL COMBUSTION RESIDUE HANDLING 2-3
2.2.1 Fly Ash 2-3
2.2.2 Bottom Ash 2-3
2.2.3 Boiler Slag 2-3
2.2.4 Flue Gas Desulfurization Sludge 2-4
2.3 SIZE AND HAZARD CLASSIFICATION 2-4
2.4 AMOUNT AND TYPE OF RESIDUALS CURRENTLY CONTAINED IN THE UNIT(S) AND MAXIMUM CAPACITY 2-5
2.5 PRINCIPAL PROJECT STRUCTURES 2-5
2.5.1 Earth Embankment 2-5
2.5.2 Outlet Structures 2-5
2.6 CRITICAL INFRASTRUCTURE WITHIN FIVE MILES DOWN GRADIENT 2-6

3.0 SUMMARY OF RELEVANT REPORTS, PERMITS, AND INCIDENTS 3-1

3.1 SUMMARY OF LOCAL, STATE, AND FEDERAL ENVIRONMENTAL PERMITS 3-1
3.2 SUMMARY OF SPILL/RELEASE INCIDENTS 3-1

4.0 SUMMARY OF HISTORY OF CONSTRUCTION AND OPERATION 4-1

4.1 SUMMARY OF CONSTRUCTION HISTORY 4-1
4.1.1 Original Construction 4-1
4.1.2 Significant Changes/Modifications in Design since Original Construction 4-1
4.1.3 Significant Repairs/Rehabilitation since Original Construction 4-1

DRAFT

4.2 SUMMARY OF OPERATIONAL PROCEDURES 4-1
4.2.1 Original Operational Procedures 4-1
4.2.2 Significant Changes in Operational Procedures and Original Startup 4-1
4.2.3 Current Operational Procedures 4-2
4.2.4 Other Notable Events since Original Startup 4-2

5.0 FIELD OBSERVATIONS 5-1

5.1 PROJECT OVERVIEW AND SIGNIFICANT FINDINGS 5-1
5.2 URQUHART ASH POND 5-1
5.2.1 Crest 5-1
5.2.2 Upstream/Inside Slope 5-2
5.2.3 Downstream/Outside Slope and Toe 5-2
5.2.4 Abutments and Groin Areas 5-3
5.3 OUTLET STRUCTURES 5-3
5.3.1 Overflow Structure 5-3
5.3.2 Outlet Conduit 5-3
5.3.3 Emergency Spillway 5-3
5.3.4 Low Level Outlet 5-3

6.0 HYDROLOGIC/HYDRAULIC SAFETY 6-1

6.1 SUPPORTING TECHNICAL DOCUMENTATION 6-1
6.1.1 Flood of Record 6-1
6.1.2 Inflow Design Flood 6-1
6.1.3 Spillway Rating 6-2
6.1.4 Downstream Flood Analysis 6-2
6.2 ADEQUACY OF SUPPORTING TECHNICAL DOCUMENTATION 6-2
6.3 ASSESSMENT OF HYDROLOGIC/HYDRAULIC SAFETY 6-2

7.0 STRUCTURAL STABILITY 7-1

7.1 SUPPORTING TECHNICAL DOCUMENTATION 7-1
7.1.1 Stability Analyses and Load Cases Analyzed 7-1
7.1.2 Design Parameters and Dam Materials 7-1
7.1.3 Uplift and/or Phreatic Surface Assumptions 7-2
7.1.4 Factors of Safety and Base Stresses 7-2
7.1.5 Liquefaction Potential 7-2
7.1.6 Critical Geological Conditions 7-3
7.2 ADEQUACY OF SUPPORTING TECHNICAL DOCUMENTATION 7-3
7.3 ASSESSMENT OF STRUCTURAL STABILITY 7-3

8.0 ADEQUACY OF MAINTENANCE AND METHODS OF OPERATION 8-1

8.1 OPERATING PROCEDURES 8-1
8.2 MAINTENANCE OF THE DAM AND PROJECT FACILITIES 8-1
8.3 ASSESSMENT OF MAINTENANCE AND METHODS OF OPERATIONS 8-1
8.3.1 Adequacy of Operating Procedures 8-1
8.3.2 Adequacy of Maintenance 8-1

DRAFT

9.0 ADEQUACY OF SURVEILLANCE AND MONITORING PROGRAM 9-1

9.1 SURVEILLANCE PROCEDURES 9-1
9.2 INSTRUMENTATION MONITORING 9-1
9.3 ASSESSMENT OF SURVEILLANCE AND MONITORING PROGRAM 9-1
9.3.1 Adequacy of Inspection Program 9-1
9.3.2 Adequacy of Instrumentation Monitoring Program 9-1

DRAFT

APPENDIX A

Doc 01:	Site Plan
Doc 02:	~~Process~~ Water Balance Diagram
Doc 03:	Pond Volumes
Doc 04:	EPA Questionnaire
Doc 05:	F&ME Structural Stability Report
Doc ~~05~~06:	Dike Landfill Pond Inspections 2009
Doc ~~06~~07:	Dike Landfill Pond Inspections 2008
Doc ~~07~~08:	Dike Landfill Pond Inspections 2007
Doc ~~08~~09:	Dike Landfill Pond Inspections 2006
Doc ~~09~~10:	Dike Landfill Pond Inspections 2005

APPENDIX B

Doc 10:	Dam Inspection Check List Form

DRAFT

1.0 CONCLUSIONS AND RECOMMENDATIONS

1.1 CONCLUSIONS

Conclusions are based on visual observations from a one-day site visit, February 16, 2011, and review of technical documentation provided by South Carolina Electric & Gas (SCE&G).

1.1.1 Conclusions Regarding the Structural Soundness of the Management Unit(s)

The dike embankments and spillway appear to be structurally sound based on a review of the engineering data provided by the owner's technical staff and Dewberry engineers' observations during the site visit.

1.1.2 Conclusions Regarding the Hydrologic/Hydraulic Safety of the Management Unit(s)

Adequate capacity & freeboard exists to safely pass the design storm.

1.1.3 Conclusions Regarding the Adequacy of Supporting Technical Documentation

The supporting technical documentation is adequate. Engineering documentation reviewed is referenced in Appendix A.

1.1.4 Conclusions Regarding the Description of the Management Unit(s)

The description of the management unit provided by the owner was an accurate representation of what Dewberry observed in the field.

1.1.5 Conclusions Regarding the Field Observations

The overall assessment of the ash pond embankment system was that it was in satisfactory condition. Surficial sloughing was observed along the Ash Pond's downstream slope. Embankments appear structurally sound.

1.1.6 Conclusions Regarding the Adequacy of Maintenance and Methods of Operation

The current maintenance and methods of operation appear to be adequate for the fly ash management unit. There was no evidence of significant embankment repairs or prior releases observed during the field inspection. Vegetation removal is required on the downstream slope.

DRAFT

1.1.7 Conclusions Regarding the Adequacy of the Surveillance and Monitoring Program

The surveillance program appears to be adequate.

1.1.8 Classification Regarding Suitability for Continued Safe and Reliable Operation

The facility is SATISFACTORY for continued safe and reliable operation. No existing or potential management unit safety deficiencies are recognized. Acceptable performance is expected under all applicable loading conditions (static, hydrologic, seismic) in accordance with the applicable criteria.

1.2 RECOMMENDATIONS

1.2.1 Recommendations Regarding the Maintenance and Methods of Operation

An action plan should be developed to address removal of woody vegetation along the downstream slope. Specifically, SCE&G needs to:

- Remove brush from the downstream slope
- Address minor rutting along crest and avoid vehicular traffic along crest

DRAFT

1.3 PARTICIPANTS AND ACKNOWLEDGEMENT

1.3.1 List of Participants

Tim Miller, South Carolina Electric & Gas (SCE&G)

Dave Jerome, South Carolina Electric & Gas (SCE&G)

Toi Bowie, South Carolina Electric & Gas (SCE&G)

Tom Effinger, SCANA

Jean-Claude Younan, SCANA

Frederic Shmurak, Dewberry & Davis, Inc.

Justin Story, Dewberry & Davis, Inc

1.3.2 Acknowledgement and Signature

We acknowledge that the management unit referenced herein has been assessed on February 16, 2011.

Frederick Shmurak, P.E.	Justin Story, E.I., LEED AP BD+C

DRAFT

2.0 DESCRIPTION OF THE COAL COMBUSTION RESIDUE MANAGEMENT UNIT(S)

2.1 LOCATION AND GENERAL DESCRIPTION

The Urquhart Generating Station and ash pond are located in Beech Island, South Carolina just off the Savannah River. The town of Jackson is approximately 7 miles downstream of the ash ponds. Figure 2.1a depicts a vicinity map around the Urquhart Generating Station while Figure 2.1b depicts an aerial view of the Urquhart Generating Station.

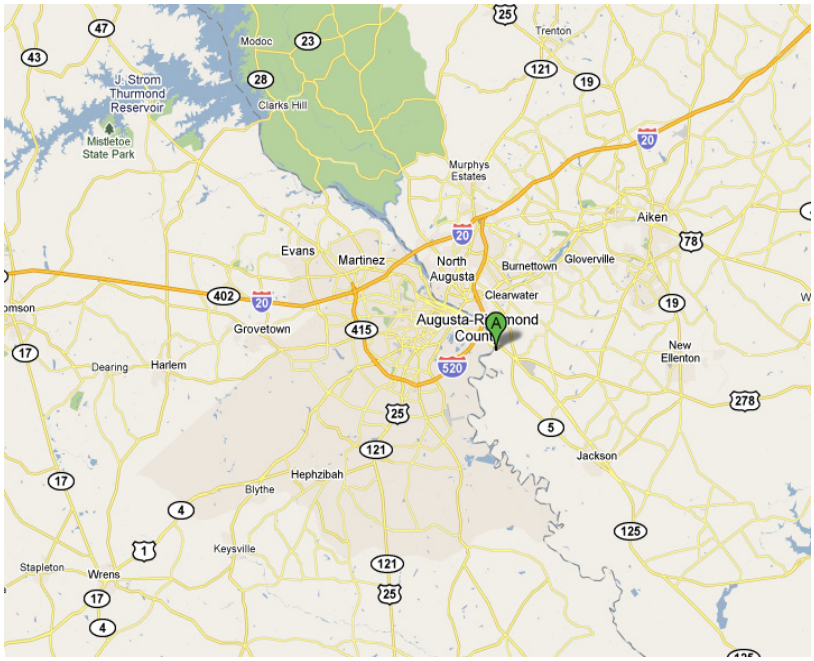

Figure 2.1a: Urquhart Generating Station Vicinity Map

DRAFT

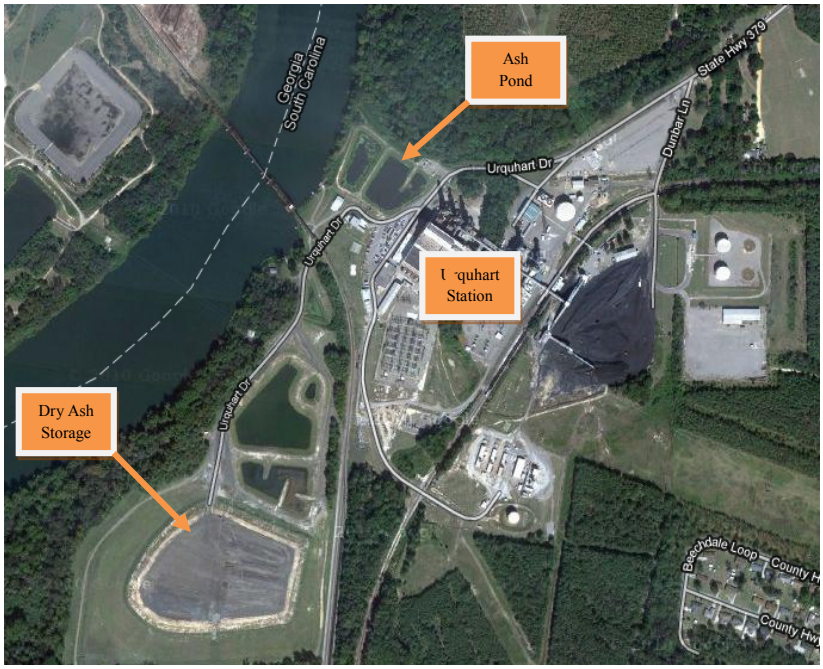

Figure 2.1b: Urquhart Generating Station Aerial View

Comment [wra1]: Note – Arrows were pointing to the wrong places. Descriptions and arrows of ash pond, dry ash storage and Urquhart Station are moved to point at the correct item.

Table 2.1: Summary of Dam Dimensions and Size	
	Urquhart Ash Pond
Dam Height (ft)	Upper Pool 8'; Lower Pool 14'
Crest Width (ft)	12
Length (ft)	1,450
Side Slopes (upstream) H:V	2:1
Side Slopes (downstream) H:V	2:1

Appendix A: Doc 01 – Site Plan

DRAFT

2.2 COAL COMBUSTION RESIDUE HANDLING

2.2.1 Fly Ash

Fly ash is collected at the base of the stack by an electrostatic precipitator. The collected ash is stored in hoppers and conveyed pneumatically to a silo (see photo below). From the silo it is mostly sold for beneficial use. What is not sold is hauled via truck to a permitted dumping site. ~~It can also be conveyed hydraulically in a pipe to the ash pond.~~ The plant ~~currently~~ does not discharge into the ash pond. ~~A flowchart for handling the fly ash is shown in Appendix A (Doc 02 - Water Flow Diagram).~~

Comment [wra2]: Photo below shows a bottom ash dewatering bin, not a fly ash silo

Comment [wra3]: The flow chart is a water balance diagram that does not pertain to the fly ash system since the fly ash system was modified in November 2010.

Hopper discharge where trucks can load ash material

2.2.2 Bottom Ash

Bottom ash is collected from the furnace and is conveyed hydraulically through ~~the same~~a pipe ~~as the fly ash into the ash pond~~to a dewatering bin. From the dewatering bin it is trucked to a permitted landfill. The transport water overflows from the dewatering bin to the ash pond. A small amount of bottom ash fines may carry over into the ash pond, but this has not been confirmed or quantified.

DRAFT

2.2.3 Boiler Slag

Boiler slag is collected from the boiler and is sluiced into the same pipe that conveys ~~fly and~~ bottom ash into the ~~ash pond~~dewatering bin.

2.2.4 Flue Gas Desulfurization Sludge

No Scrubbers are used in this plant so there is no flue gas desulfurization (FGD) process or related waste products to be discharged.

2.3 SIZE AND HAZARD CLASSIFICATION

The ash pond is partly impounded by an earthen embankment system consisting of a dike configuration and partly incised into natural grade. There is one ash pond for the plant separated into two pools (upper and lower) by an internal dike. Reference Table 2.1 for dam height, crest width, length and side slopes. The current storage volume at the normal pool elevation is 30,810 CY for the ash pond based on a SCE&G Pond Volume map provided (Appendix A: Doc 03 – Pond Volumes).

Table 2.3a: USACE ER 1110-2-106 Size Classification

Category	Impoundment Storage (Ac-ft)	Height (ft)
Small	50 and < 1,000	25 and < 40
Intermediate	1,000 and < 50,000	40 and < 100
Large	> 50,000	> 100

A Hazard Classification has not been assigned by a regulatory agency, but based on observations, a classification of **Low** appears to be appropriate. Per the Federal Guidelines for Dam Safety dated April 2004, a Low Hazard Potential classification applies to those dams where failure or misoperation results in no probable loss of human life and/or environmental losses. Losses are principally limited to the owner's property.

Table 2.3b: FEMA Federal Guidelines for Dam Safety Hazard Classification

	Loss of Human Life	Economic, Environmental, Lifeline Losses
Low	None Expected	Low and generally limited to owner
Significant	None Expected	Yes
High	Probable. One or more expected	Yes (but not necessary for classification)

DRAFT

2.4 AMOUNT AND TYPE OF RESIDUALS CURRENTLY CONTAINED IN THE UNIT(S) AND MAXIMUM CAPACITY

The ash pond contains fly ash, bottom ash, pyrites and boiler slag. The drainage area is essentially the surface area of the ponds.

Table 2.4: Maximum Capacity of Unit	
Urquhart Ash Pond	
Surface Area (acre)	2.2
Current Storage Capacity (cubic yards)	29,500-30,810
Current Storage Capacity (acre-feet)	18 - 19
Total Storage Capacity (cubic yards)	Not Provided
Total Storage Capacity (acre-feet)	Not Provided
Crest Elevation (feet)	142.8
Normal Pond Level (feet)	Upper Pool 135.8/Lower Pool 134.6

Appendix A: Doc 04 – EPA Questionnaire

2.5 PRINCIPAL PROJECT STRUCTURES

2.5.1 Earth Embankment

The ash pond system is located in the flood plain. It contains the following from top to bottom:

- Fill placed circa 1977 for the ponds;
- Fill Placed in the Flood Plain during the original plant construction Circa 1953;
- Naturally occurring Flood Plain Sediment.

It was determined by F&ME Consultants that all fill material used is naturally occurring river and Coastal Plain Sediments from the immediate plant site and there was no evidence of ash material used in the construction of the ponds. (Appendix A: Doc 05 – Subsurface Investigation and Structural Stability Report).

2.5.2 Outlet Structures

The pond has a riser with 18" reinforced concrete pipe (RCP) that discharges into the Savannah River.

DRAFT

2.6 CRITICAL INFRASTRUCTURE WITHIN FIVE MILES DOWN GRADIENT

All critical structures were attempted to be located by using aerial photography which might not accurately represent what currently exists down-gradient of the site. No critical infrastructure was found to be downstream of the site.

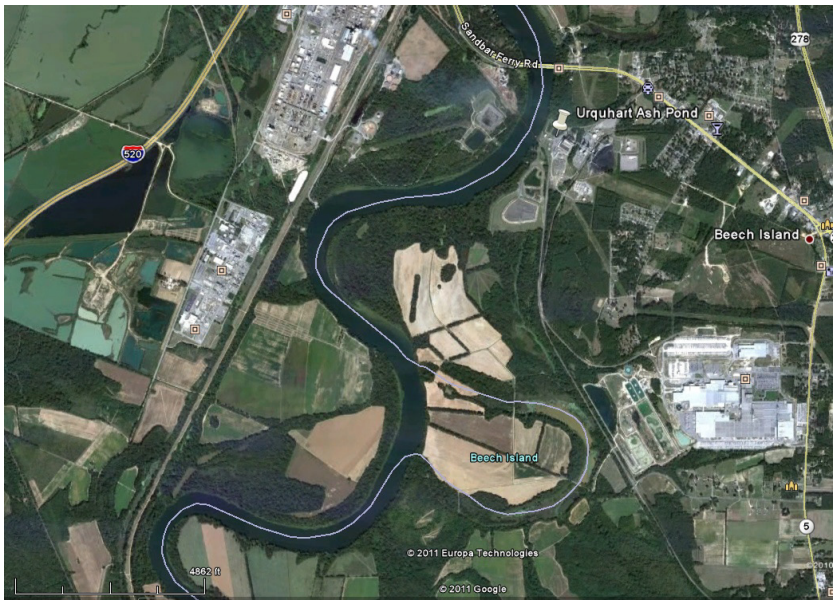

Figure 2.6: Critical Infrastructure Map

DRAFT

3.0 SUMMARY OF RELEVANT REPORTS, PERMITS, AND INCIDENTS

Summary of Reports on the Safety of the Management Unit

2010 Annual Ash Pond Dike Inspection, Urquhart Station. (Appendix A: Doc 06 – 2010 Urquhart Annual Inspection). Comments from the 2010 report include:

- Minor surface erosion is present on some areas along the berm and needs to have 4 inches of top soil placed and be re-seeded;
- Any new woody vegetation along upstream face of ash pond should be removed;
- Routine maintenance such as grass mowing, fertilizing, applying herbicide to rip rap armored banks and regularly scheduled quarterly visual inspections and an annual inspection should continue;
- Develop an Emergency Action Plan (EAP) for the ash pond.

2009 Ash Pond Dike Inspections, Urquhart Station. (Appendix A: Doc 07 – Dike Landfill Pond Inspections 2009). Comments from the 2009 reports include:

- The January 8, 2009 inspection concluded that no problems were encountered during the inspection and that erosion areas are currently being worked on;
- The April 4, 2009 inspection concluded that erosion areas need to be corrected due to recent rain events;
- The remaining inspections dated July 6, 2009, October 6, 2009, and September 29, 2009 had no comments.

Additional inspection reports can be found in Appendix A: Doc 08-11.

3.1 SUMMARY OF LOCAL, STATE, AND FEDERAL ENVIRONMENTAL PERMITS

Discharge from the impoundment is regulated by the South Carolina Department of Health and Environmental Control (SCDHEC) and the impoundment has been issued a National Pollutant Discharge Elimination System Permit (Permit No. SC0000574 was issued ~~September 30, 2008~~October 22, 2003).

3.2 SUMMARY OF SPILL/RELEASE INCIDENTS

Data reviewed by Dewberry did not indicate any spills, unpermitted releases, or other performance related problems with the dam over the last 10 years.

DRAFT

4.0 SUMMARY OF HISTORY OF CONSTRUCTION AND OPERATION

4.1 SUMMARY OF CONSTRUCTION HISTORY

4.1.1 Original Construction

The plant began operation in 1953 and, based on documentation from the slope stability analysis report, portions of the embankments were constructed around that time frame. In 1977 additional fill was placed for construction of the ponds. (Appendix A: Doc 05 – Subsurface Investigation and Structural Stability Report). Very limited information was provided for the original construction of the ash pond.

4.1.2 Significant Changes/Modifications in Design since Original Construction

In 1977 additional fill was placed for construction of the ash ponds. No additional information was provided.

4.1.3 Significant Repairs/Rehabilitation since Original Construction

No documentation of significant repairs/rehabilitation since the original construction was provided.

4.2 SUMMARY OF OPERATIONAL PROCEDURES

4.2.1 Original Operational Procedures

The ash pond was designed and operated for reservoir sedimentation and sediment storage of ash. Coal combustion residue and stormwater runoff from around the ash pond facility are discharged into the reservoir. Inflow water is treated through gravity settling and deposition, and the treated process water and stormwater runoff are discharged through an unregulated type overflow outlet structure. The ponds are not used for permanent storage and are periodically dredged to remove ash material.

4.2.2 Significant Changes in Operational Procedures and Original Startup

No documentation was provided describing any significant changes in Operating Procedures.

DRAFT

4.2.3 Current Operational Procedures

To the best of our knowledge, original operational procedures for bottom ash handling are in effect. ~~There has been an initiative to send the coal combustion residuals to a permitted dry dumping facility, but the ponds continue to receive ash material.~~ The fly ash system was modified in 2010 to eliminate carryover of fly ash into the ash pond from the transport system. Bottom ash and fly ash are now being disposed in an offsite permitted commercial landfill.

4.2.4 Other Notable Events since Original Startup

No additional information as provided.

DRAFT

5.0 FIELD OBSERVATIONS

5.1 PROJECT OVERVIEW AND SIGNIFICANT FINDINGS

Dewberry personnel Frederic Shmurak, P.E. and Justin Story, E.I., LEED AP BD+C performed a site visit on Wednesday, February 16, 2011 in company with the participants.

The site visit began at 10:00 AM. The weather was cloudy and cool. Photographs were taken of conditions observed. Selected photographs are included here for ease of visual reference. All pictures were taken by Dewberry personnel during the site visit. The Dam Inspection Checklist in Appendix B has additional site data.

The overall assessment of the dam was that it was in satisfactory condition and no significant findings were noted.

5.2 URQUHART ASH POND

5.2.1 Crest

The crest had no signs of depressions, tension cracking, or other indications of settlement or shear failure, and appeared to be in satisfactory condition. Minor rutting was observed along portions of the crest (See Photo 5-1.).

Photo 5-1. Rutting along crest

DRAFT

5.2.2 Upstream/Inside Slope

The upstream slopes are mostly vegetated with tall grasses and other wetland vegetation. No scarps, sloughs, depressions, bulging or other indications of slope instability or signs of erosion were observed (See Photo 5-2.).

Photo 5-2. Overall view of interior of ash pond

5.2.3 Downstream/Outside Slope and Toe

No scarps, sloughs, depressions, bulging or other indications of slope instability or signs of erosion were observed. Brush was observed along the southeastern section of the downstream slope (See Photo 5-3.).

Photo 5-3. Brush along southeastern downstream slope

DRAFT

5.2.4 Abutments and Groin Areas

The ash pond embankment consists of a dike system completely surrounding the pond; therefore the earthen embankment does not abut existing hillsides, rock outcrops or other raised topographic features.

5.3 OUTLET STRUCTURES

5.3.1 Overflow Structure

The outlet structures for the ash pond were properly discharging flow from the pond and visually appeared to be in good condition.

5.3.2 Outlet Conduit

The visual portion of the outlet conduit was functioning properly with no apparent deterioration.

5.3.3 Emergency Spillway

No emergency spillway is present.

5.3.4 Low Level Outlet

No low level outlet is present.

DRAFT

6.0 HYDROLOGIC/HYDRAULIC SAFETY

6.1 SUPPORTING TECHNICAL DOCUMENTATION

6.1.1 Flood of Record

No documentation has been provided about the flood of record.

6.1.2 Inflow Design Flood

According to FEMA Federal Guidelines for Dam Safety, the current practice in the design of dams is to use the Inflow Design Flood (IDF) that is deemed appropriate for the hazard potential of the dam and reservoir, and to design spillways and outlet works that are capable of safely accommodating the floodflow without risking the loss of the dam or endangering areas downstream from the dam to flows greater than the inflow. The recommended IDF or spillway design flood for a low hazard, small-sized structure (See section 2.2), in accordance with the USACE Recommended Guidelines for Safety Inspection of Dams ER 1110-2-106 criteria, is the 50-year to 100-year flood (See Table 6.1.2).

Table 6.1.2: USACE Hydrologic Evaluation Guidelines Recommended Spillway Design floods

Hazard	Size	Spillway Design Flood
Low	Small	50 to 100-yr frequency
	Intermediate	100-yr to ½ PMF
	Large	½ PMF to PMF
Significant	Small	100-yr to ½ PMF
	Intermediate	½ PMF to PMF
	Large	PMF
High	Small	½ PMF to PMF
	Intermediate	PMF
	Large	PMF

The Probable Maximum Precipitation (PMP) is defined by American Meteorological Society as the theoretically greatest depth of precipitation for a given duration that is physically possible over a particular drainage area at a certain time of year. The National Weather Service (NWS) further states that in consideration of our limited knowledge of the complicated processes and interrelationships in storms, PMP values are identified as estimates. The NWS has published application procedures that can be used with PMP estimates to develop spatial and temporal characteristics of a Probable Maximum Storm (PMS). A PMS thus

DRAFT

developed can be used with a precipitation-runoff simulation model to calculate a probable maximum flood (PMF) hydrograph.

The 24-hour, 10-square mile PMP depth is 43 inches. Since the facility has a contributing drainage area equal to the surface area of the impoundment, it is anticipated adequate freeboard exists so the facility would not experience significant flood states. The freeboard of the Active Ash Pond is 98 inches, so adequate freeboard exists to safely pass the design storm.

6.1.3 Spillway Rating

No spillway rating was provided. The ash pond is a diked embankment facility having a contributing drainage area equal to the surface area of the impoundment; therefore the impounded pool would not be anticipated to experience significant changes in elevation. The outlet structure type is unregulated and, given little change in the normal pool elevation, the resulting discharge rate is expected to be relatively constant.

6.1.4 Downstream Flood Analysis

No downstream flood analysis was provided.

6.2 ADEQUACY OF SUPPORTING TECHNICAL DOCUMENTATION

Supporting documentation reviewed by Dewberry is adequate.

6.3 ASSESSMENT OF HYDROLOGIC/HYDRAULIC SAFETY

Adequate capacity and freeboard exists to safely pass the design storm.

DRAFT

7.0 STRUCTURAL STABILITY

7.1 SUPPORTING TECHNICAL DOCUMENTATION

7.1.1 Stability Analyses and Load Cases Analyzed

A stability analysis report for the ash pond dated March 16, 2011, by F&ME Consultants provides information on the stability analysis results and is presented in Section 7.1.4 Factors of Safety and Base Stresses. Steady state (normal) and seismic loading conditions were analyzed. See Appendix A - Doc 05: Subsurface Investigation and Structural Stability Report, for the complete report.

7.1.2 Design Parameters and Dam Materials

A report for the ash pond was prepared by F&ME Consultants, Inc. in 2011. The report includes documentation of the shear strength design properties for the ash pond embankments. Five (5) sections of the embankments were analyzed and only one of the most critical sections, which is adjacent to the Savannah River, is shown in this report (See Figure 7.1.2). For the complete documentation see Appendix A - Doc 05: Subsurface Investigation and Structural Stability Report.

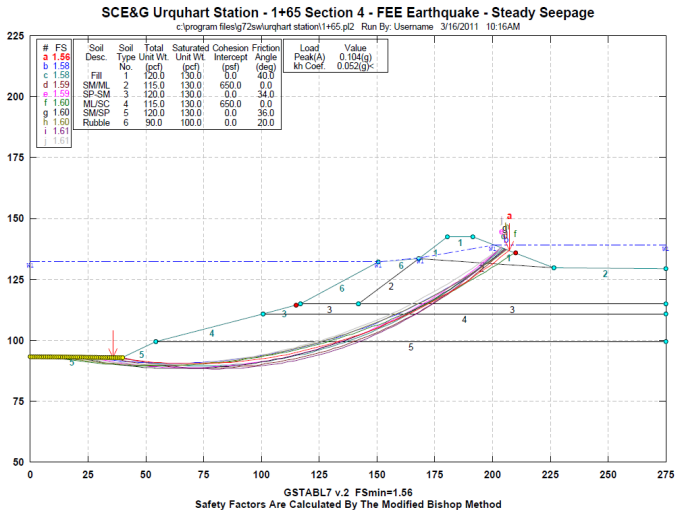

Figure 7.1.2

DRAFT

7.1.3 Uplift and/or Phreatic Surface Assumptions

Monitoring instrumentation devices have not been installed to verify water levels within the embankment. The assumed phreatic surfaces are shown on the figures in section 7.1.2 above and the depiction seems appropriate for these types of structures. No additional information was provided. The water level of the upstream interior pond was stated to be 135.8' and downstream interior pond to be 134.6'. These elevations were not verified.

7.1.4 Factors of Safety and Base Stresses

Table 7.1.4 Factors of Safety for the Five Analyzed Sections of the Ash Pond (Appendix A: Doc 05 – Subsurface Investigation and Structural Stability Report)

Loading Condition	Location	Performance Criteria	Factor of Safety
Max. Storage Pool-Steady Seepage	Per Stability Report – Section 4 Adjacent to Savannah River	1.5	1.99
Liquefaction-Steady Seepage		>1.0	1.26
FEE Earthquake-Steady Seepage		>1.0	1.56
SEE Earthquake-Steady Seepage		>1.0	1.14

7.1.5 Liquefaction Potential

In the report by F&ME Consultants it was determined that during a seismic event, liquefaction of the foundation soils could occur. The maximum liquefaction induced settlement was estimated to be about five inches. The settlement would be expected over a broad area of the ash pond perimeter and would not be anticipated to create instability of the perimeter containment system. (Appendix A: Doc 05 - Subsurface Investigation and Structural Stability Report)

DRAFT

7.1.6 Critical Geological Conditions

The project site is located on the East side of the Savannah River in Beech Island, Aiken County, South Carolina and is situated within the Upper Coastal Plain of the Physiographic Province near the Fall Line (which lies to the North of the site).

Based on USGS Seismic-Hazard Maps for the Conterminous United States, the facility is located in an area anticipated to experience a 0.12 g acceleration with a 2-percent probability of exceedance in 50 years.

7.2 ADEQUACY OF SUPPORTING TECHNICAL DOCUMENTATION

Structural stability documentation is adequate.

7.3 ASSESSMENT OF STRUCTURAL STABILITY

Overall the structural stability of the dam appears to be satisfactory.

DRAFT

8.0 ADEQUACY OF MAINTENANCE AND METHODS OF OPERATION

8.1 OPERATING PROCEDURES

The ash pond was designed and operated for reservoir sedimentation and sediment storage of ash. However, since the fly ash system was modified in 2010, only minor amounts of ~~C~~coal combustion residual and minimal stormwater runoff around the ash pond facility are discharged into the reservoir. Inflow water is treated through gravity settling and deposition, and the treated process water and stormwater runoff are discharged through an unregulated type overflow outlet structure. The ponds are not used for permanent storage and are periodically dredged to remove ash material.

8.2 MAINTENANCE OF THE DAM AND PROJECT FACILITIES

The maintenance of the dam and project facilities is adequate, although the following items need to be addressed:

- Address minor rutting along crest
- Remove brush along downstream slope of southeastern embankment

8.3 ASSESSMENT OF MAINTENANCE AND METHODS OF OPERATIONS

8.3.1 Adequacy of Operating Procedures

Based on the assessments of this report, operating procedures appear to be adequate.

8.3.2 Adequacy of Maintenance

Based on the assessments of this report, maintenance procedures appear to be adequate.

DRAFT

9.0 ADEQUACY OF SURVEILLANCE AND MONITORING PROGRAM

9.1 SURVEILLANCE PROCEDURES

Quarterly/Annual Inspections:

Quarterly/Annual inspections were provided by SCE&G/SCANA and can be found in Appendix A: Doc 07 - 11.

9.2 INSTRUMENTATION MONITORING

The Urquhart Plan impoundment dikes do not have an instrumentation monitoring system.

9.3 ASSESSMENT OF SURVEILLANCE AND MONITORING PROGRAM

9.3.1 Adequacy of Inspection Program

Based on the data reviewed by Dewberry, including observations during the site visit, the inspection program is adequate.

9.3.2 Adequacy of Instrumentation Monitoring Program

No instrumentation is needed for the Urquhart ash pond.

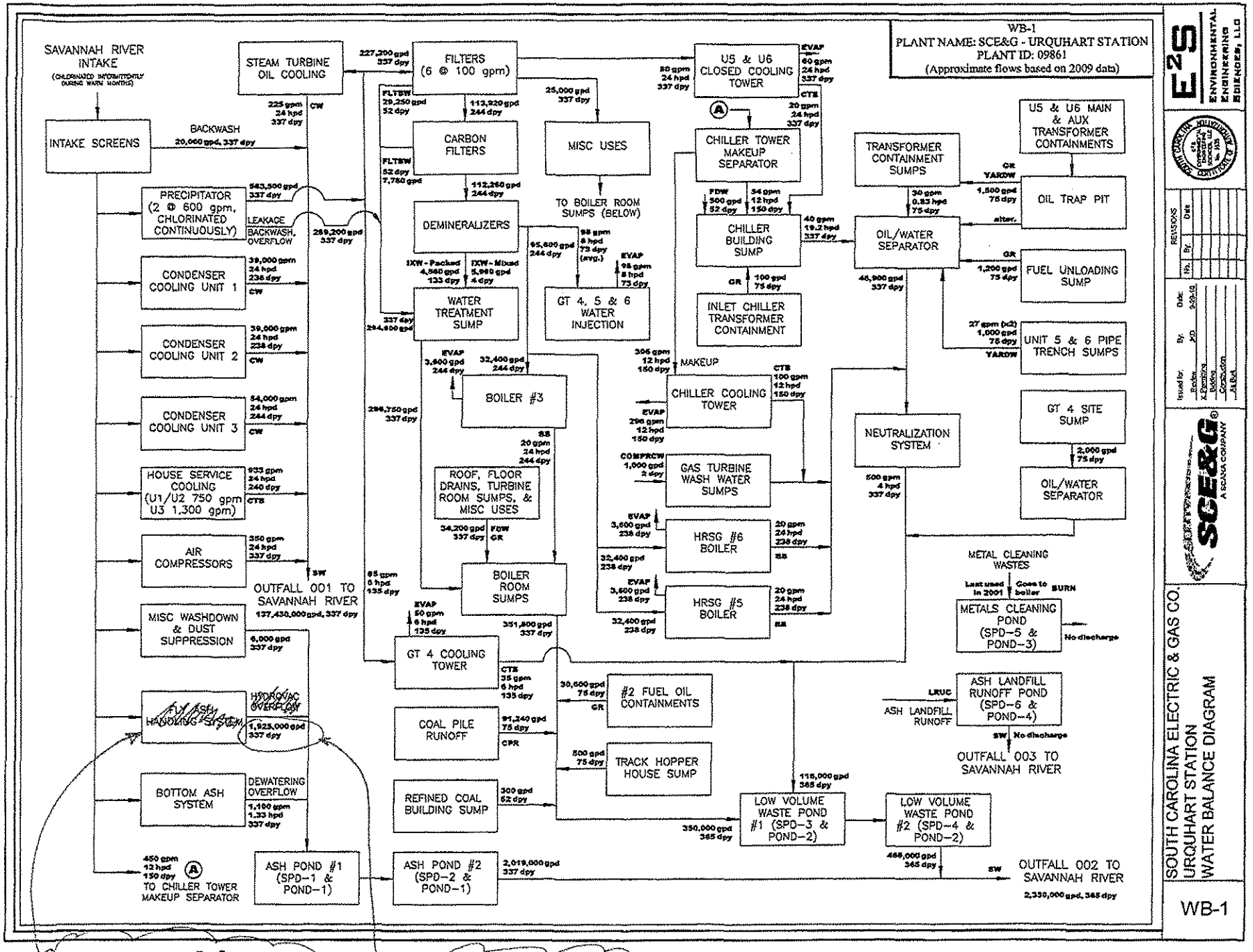
WB-1
PLANT NAME: SCE&G - URQUHART STATION
PLANT ID: 09861
(Approximate flows based on 2009 data)
SAVANNAH RIVER INTAKE
(CHLORINATED INTERMITTENTLY DURING WARM MONTHS)
INTAKE SCREENS
BACKWASH
20,000 gpd, 337 dpy
STEAM TURBINE OIL COOLING
227,200 gpd 337 dpy
225 gpm 24 hpd 337 dpy
CW
FILTERS (6 @ 100 gpm)
FLTBW 29,250 gpd 52 dpy
112,920 gpd 244 dpy
CARBON FILTERS
FLTBW 52 dpy 7,780 gpd
112,260 gpd 244 dpy
DEMINERALIZERS
IXW - Packed 4,560 gpd 133 dpy
IXW - Mixed 5,960 gpd 4 dpy
WATER TREATMENT SUMP
237 dpy 294,600 gpd
25,000 gpd 337 dpy
MISC USES
TO BOILER ROOM SUMPS (BELOW)
95,800 gpd 244 dpy
98 gpm 8 hpd 73 dpy (avg.)
GT 4, 5 & 6 WATER INJECTION
EVAP 98 gpm 8 hpd 73 dpy
PRECIPITATOR (2 @ 600 gpm, CHLORINATED CONTINUOUSLY)
543,500 gpd 337 dpy
LEAKAGE
BACKWASH, OVERFLOW
289,200 gpd 337 dpy
CONDENSER COOLING UNIT 1
39,000 gpm 24 hpd 238 dpy
CW
CONDENSER COOLING UNIT 2
39,000 gpm 24 hpd 238 dpy
CW
CONDENSER COOLING UNIT 3
54,000 gpm 24 hpd 244 dpy
CW
HOUSE SERVICE COOLING (U1/U2 750 gpm U3 1,300 gpm)
933 gpm 24 hpd 240 dpy
CTS
AIR COMPRESSORS
350 gpm 24 hpd 337 dpy
SW
OUTFALL 001 TO SAVANNAH RIVER
137,430,000 gpd, 337 dpy
MISC WASHDOWN & DUST SUPPRESSION
6,000 gpd 337 dpy
FLY ASH HANDLING SYSTEM
HYDROVAC OVERFLOW
1,925,000 gpd 337 dpy
BOTTOM ASH SYSTEM
DEWATERING OVERFLOW
1,100 gpm 1.33 hpd 337 dpy
450 gpm 12 hpd 150 dpy
TO CHILLER TOWER MAKEUP SEPARATOR
ASH POND #1 (SPD-1 & POND-1)
ASH POND #2 (SPD-2 & POND-1)
2,019,000 gpd 337 dpy
EVAP 3,600 gpd 244 dpy
32,400 gpd 244 dpy
BOILER #3
298,750 gpd 337 dpy
BS 20 gpm 24 hpd 244 dpy
ROOF, FLOOR DRAINS, TURBINE ROOM SUMPS, & MISC USES
34,200 gpd 337 dpy
FDW GR
BOILER ROOM SUMPS
85 gpm 6 hpd 135 dpy
EVAP 50 gpm 6 hpd 135 dpy
351,800 gpd 337 dpy
GT 4 COOLING TOWER
CTS 35 gpm 6 hpd 135 dpy
30,600 gpd 75 dpy
GR
#2 FUEL OIL CONTAINMENTS
COAL PILE RUNOFF
91,240 gpd 75 dpy
CPR
500 gpd 75 dpy
TRACK HOPPER HOUSE SUMP
REFINED COAL BUILDING SUMP
300 gpd 52 dpy
U5 & U6 CLOSED COOLING TOWER
EVAP 60 gpm 24 hpd 337 dpy
50 gpm 24 hpd 337 dpy
CTS 20 gpm 24 hpd 337 dpy
CHILLER TOWER MAKEUP SEPARATOR
FDW 500 gpd 52 dpy
54 gpm 12 hpd 150 dpy
CHILLER BUILDING SUMP
40 gpm 19.2 hpd 337 dpy
GR 100 gpd 75 dpy
INLET CHILLER TRANSFORMER CONTAINMENT
306 gpm 12 hpd 150 dpy
MAKEUP
CHILLER COOLING TOWER
CTS 100 gpm 12 hpd 150 dpy
EVAP 298 gpm 12 hpd 150 dpy
COMPRCW 1,000 gpd 2 dpy
GAS TURBINE WASH WATER SUMPS
EVAP 3,600 gpd 238 dpy
HRSG #6 BOILER
20 gpm 24 hpd 238 dpy
BS
32,400 gpd 238 dpy
EVAP 3,600 gpd 238 dpy
HRSG #5 BOILER
20 gpm 24 hpd 238 dpy
BS
32,400 gpd 238 dpy
TRANSFORMER CONTAINMENT SUMPS
30 gpm 0.83 hpd 75 dpy
OIL/WATER SEPARATOR
46,900 gpd 337 dpy
NEUTRALIZATION SYSTEM
500 gpm 4 hpd 337 dpy
U5 & U6 MAIN & AUX TRANSFORMER CONTAINMENTS
GR YARDW 1,500 gpd 75 dpy
OIL TRAP PIT
alter.
GR 1,200 gpd 75 dpy
FUEL UNLOADING SUMP
27 gpm (x2) 1,000 gpd 75 dpy
YARDW
UNIT 5 & 6 PIPE TRENCH SUMPS
GT 4 SITE SUMP
2,000 gpd 75 dpy
OIL/WATER SEPARATOR
METAL CLEANING WASTES
Last used in 2001
Goes to boiler
BURN
METALS CLEANING POND (SPD-5 & POND-3)
No discharge
LRUC
ASH LANDFILL RUNOFF
ASH LANDFILL RUNOFF POND (SPD-6 & POND-4)
SW No discharge
OUTFALL 003 TO SAVANNAH RIVER
115,000 gpd 365 dpy
LOW VOLUME WASTE POND #1 (SPD-3 & POND-2)
350,000 gpd 365 dpy
LOW VOLUME WASTE POND #2 (SPD-4 & POND-2)
465,000 gpd 365 dpy
SW
OUTFALL 002 TO SAVANNAH RIVER
2,350,000 gpd, 365 dpy
ASH SLUICE PUMP MINIMUM FLOW
300,000 gpd 365 dpy
E2S ENVIRONMENTAL ENGINEERING SOLUTIONS, LLC
SCE&G A SCANA COMPANY
SOUTH CAROLINA ELECTRIC & GAS CO.
URQUHART STATION
WATER BALANCE DIAGRAM
WB-1

WB-1
PLANT NAME: SCE&G - URQUHART STATION
(Flow rates are approximate and may vary based on operations)

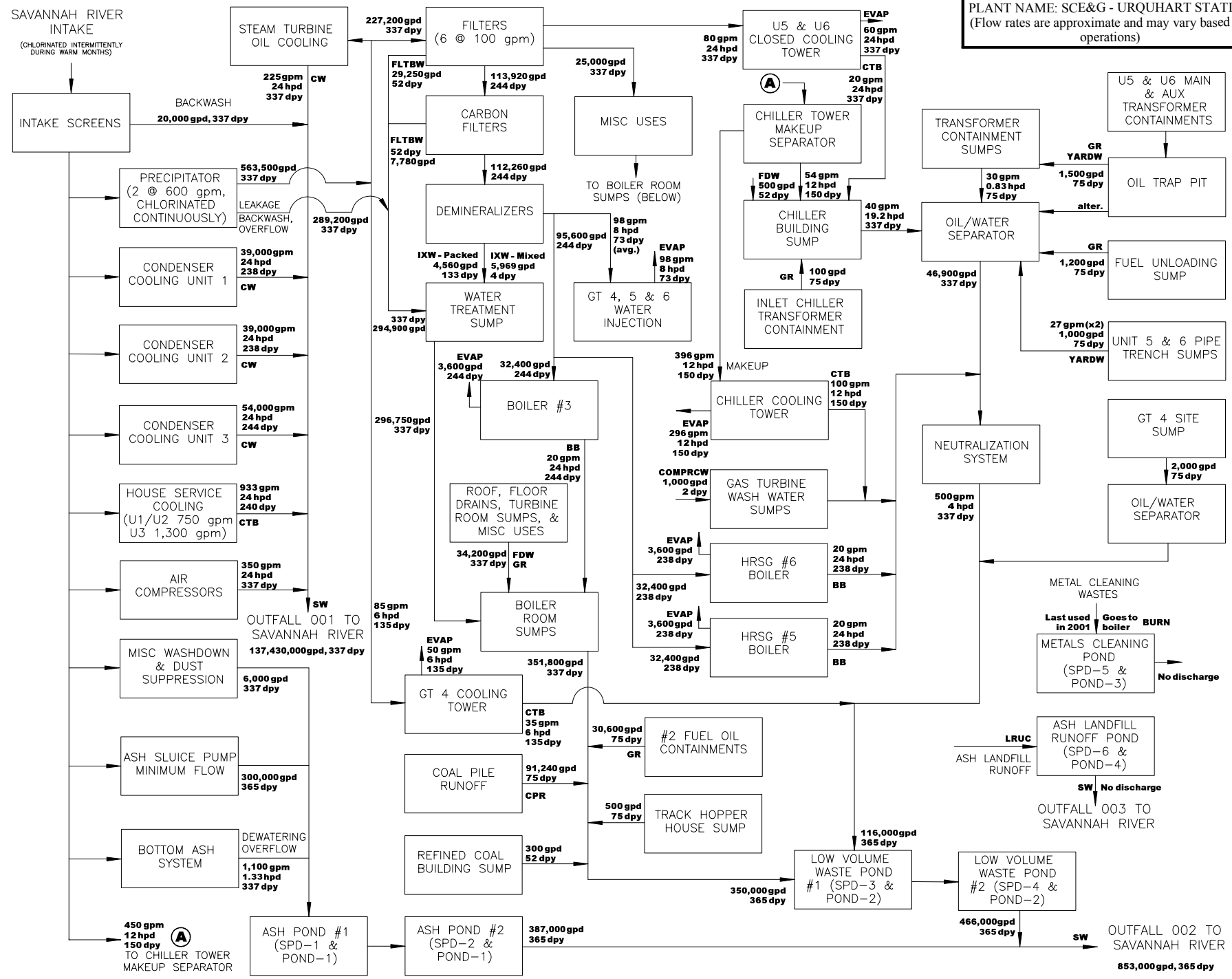

E2S ENVIRONMENTAL ENGINEERING SCIENCES, LLC

REVISIONS

No.	By:	Date:

Issued for: Review / X Permitting / Bidding / Construction / As Built

Date: 5-20-11
By: JKD

SCE&G® A SCANA COMPANY

SOUTH CAROLINA ELECTRIC & GAS CO.
URQUHART STATION
WATER BALANCE DIAGRAM

WB-1

NOTE

Subject: EPA Comments on South Carolina Electric & Gas Co, Urquhart Generating Station, Beech Island, SC
Round 9 Draft Assessment Report

To: File

Date: October 18, 2011

1. On p. ii, **PURPOSE AND SCOPE**, change language to:

The U.S. Environmental Protection Agency (EPA) is ~~embarking on an initiative to~~ investigating the potential for catastrophic failure of Coal Combustion Surface Impoundments (i.e., management unit) from occurring at electric utilities in an effort to protect lives and property from the consequences of a dam failure or the improper release of impounded slurry.

2. On p. ii, INTRODUCTION, SUMMARY CONCLUSIONS AND RECOMMENDATIONS, second paragraph, replace "Section 1.2.5" with "Section 1.2.1."

3. On p. ii, INTRODUCTION, SUMMARY CONCLUSIONS AND RECOMMENDATIONS, third paragraph, each individual unit must receive a condition rating, please refrain from rating the facility as a whole. Please correct this in section 1.1.8 on p. 1-2 also.

4. On p. 2-3, section 2.2.1, the report states that "the plant currently does not discharge into the ash pond." This statement appears to be contradicted in sections 2.2.2, 2.2.3 and 4.2.3.

5. A "satisfactory" condition rating is provided yet there is a potential for liquefaction to occur based on the statements in section 7.1.5. This fact may warrant a condition rating of less than satisfactory. The Recommendations section (section 1.2) should address this issue.

   7.1.5 Liquefaction Potential
   "In the report by F&ME Consultants it was determined that during a seismic event, **liquefaction of the foundation soils could occur.** The maximum liquefaction induced settlement was estimated to be about five inches. The settlement would be expected over a broad area of the ash pond perimeter and would not be anticipated to create instability of the perimeter containment system."

6. On p. 7-3, section 7.3 ASSESSMENT OF STRUCTURAL STABILITY, the report states: "Overall the structural stability of the dam appears to be satisfactory." With a potential for liquefaction to occur (section 7.1.5), there should not be a statement indicating that the dam appears to be satisfactory.

7. Appendix A, please identify each document prior to the document inclusion in Appendix A.

8. The following was not addressed in the report for either pond: “Is any part of the impoundment built over wet ash, slag, or other unsuitable materials (like TVA)?” Please address for each Pond.