Verification of Microturbine Distributed Generation and Combined Heat and Power Technologies under the U.S. EPA's ETV Program

Michael Kosusko, EPA Project Officer
ETV Air Pollution Control Technology Center
Timothy Hansen, Southern Research Institute
Director, Greenhouse Gas Technology Center

GHG Center Mission Since 1997

Locate promising GHG mitigation and monitoring technologies, subject them to comprehensive performance testing, and report the results to the public…….. accelerating commercialization and use of beneficial environmental technologies.

Technology Focus Areas

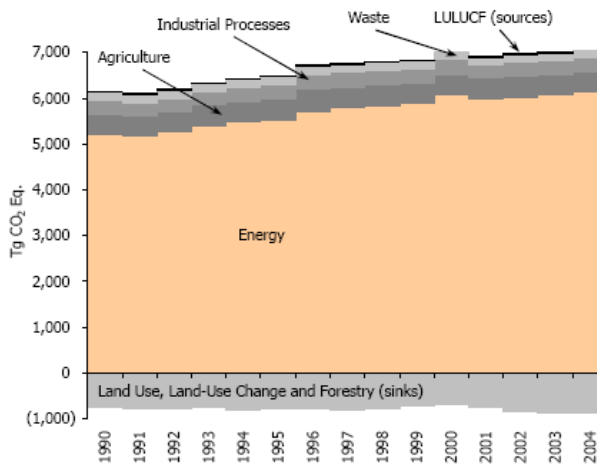

Note: Relatively smaller amounts of GWP-weighted emissions are also emitted from the Solvent ar
Product Use sectors

Figure ES-11: U.S. Greenhouse Gas Emissions and Sinks by Chapter/IPCC S

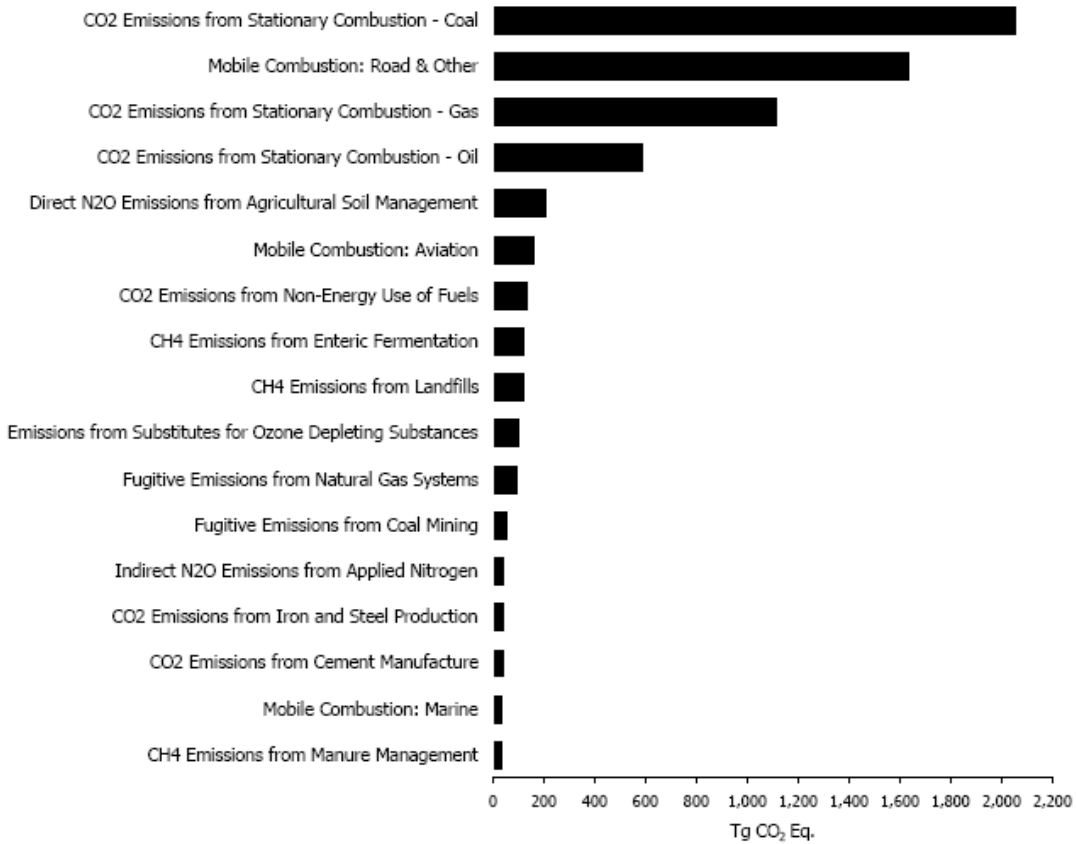

Source: Inventory of U.S. Greenhouse Gas Emissions & Sinks: 1990-2006. EPA, 2007.

Figure ES-16: 2006 Key Categories - Tier 1 Level Assessment
Note: For a complete discussion of the key source analysis see Annex 1.

36 Technologies Have Entered the Center's Verification Process

- **Oil & Gas Industries**
  - Leak mitigation devices (7)
  - Process technologies (1)
- **Transportation Industry**
  - Fuels and lubricants (2)
  - Engine modifications (1)
  - Discontinued Verifications (3)
- **GHG Monitoring**
  - Emissions (2)
- **Advanced Energy**
  - Distributed power & CHP - fossil fuel (8)
  - Distributed power & CHP - renewable fuel (5)
  - Renewable fuels conditioning (2)
  - Fuel cleaning & others (3)
  - Discontinued verifications (1)
- **Energy Efficient Building Technologies**
  - Geothermal Technologies (1)

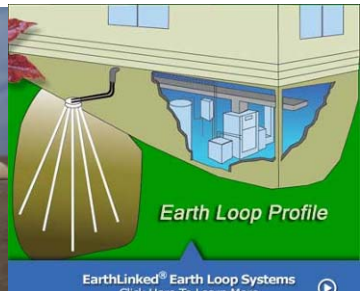

Advanced & Sustainable Energy Technologies

- Biogas Production, Treatment, and Use – Dairy and Swine Farms, Wastewater Treatment Plants, Landfills
- Distributed Energy Sources Operating on Fossil and Renewable Fuels – Microturbines and Fuel Cells

Projected Outcomes For Selected Verified Technologies

- **<u>Microturbine-CHP Systems</u>**
- Verified six different microturbine systems (four vendors)
- Fuel sources include natural gas and biogas
- Combined heat and power applications (space heating, water heating, digester heating)
- Monitored power quality, thermal and electrical efficiency, emissions, emission offsets
- Outcomes:
  - Electrical efficiency 20–26%; Thermal 7–47%
  - Projected installation of 55 MW (currently at 13 MW) in 5 years
  - CO_2 reductions of 83k–150k ton/yr
  - NO_x reductions of 490–530 ton/yr
  - Improvements in approaches to installations

Biogas-Fired Engine-CHP

- Technology and Field Test Site
  - Biogas from anaerobic digestion of cow manure/food waste
  - Caterpillar 379 Martin Machinery 250kW Recip. Engine-CHP
  - 1750 head dairy farm in Auburn, NY
  - On-site power use and grid net metering
  - Heat recovered to digester (most wasted!)
  - Used ASERTTI / ETV Field Testing Protocol
- Results
  - Power quality within IEEE
  - Total efficiency: 17–35% (poor heat recovery)
  - Emissions reduced/increased:
    - NO_x: 29k–32k lbs/yr
    - CO_2: 6,806–7,136 ton/yr

Swine Farm Combined Heat and Power Production Using Anaerobic Digester Gas

- **Capstone 30kW Microturbine-CHP**
- **Martin Machinery 100kW Recip. Engine-CHP**
- **Field Test Site**
  - 5000 head swine farm in Lamar, CO
  - Biogas from anaerobic digestion of manure
  - On-site power use and grid sales
  - Recovered waste heat maintained digester temperature
- **Selected Results (Microturbine / Engine)**
  - Electrical Efficiency: 20.4% / 19.7%
  - Power output: 19.9 kW / 44.7 kW
  - Total Efficiency: 53.7% / 52.1%
  - Emissions: CO_2 – 3.45 / 1.97 lb/kWh
    NO_x – 8.21E-5 / 0.012 lb/kWh
    THC – 0.0027 lb/kWh / ADL (> 10000 ppm)
  - Findings:
    - High sulfur, NO_x, CO emissions from engine;
    - Low microturbine generator electrical efficiency (due to altitude and compressor load)

DOD-ESTCP Program: Low BTU Microturbine

- 30 kW Microturbine from Flex Energy
- To be installed at DoD host site
- Operates on low BTU gas from landfills and other sources (15 BTU)
- Will generate a database of potential applications and determine DoD-wide potential impacts (outcomes)
- $965k over three years
- In contracting process now
- ETV verification planned for second-third year
- Two additional ESTCP preproposals submitted – may include ETV verification

Flex-Microturbine Process Flow

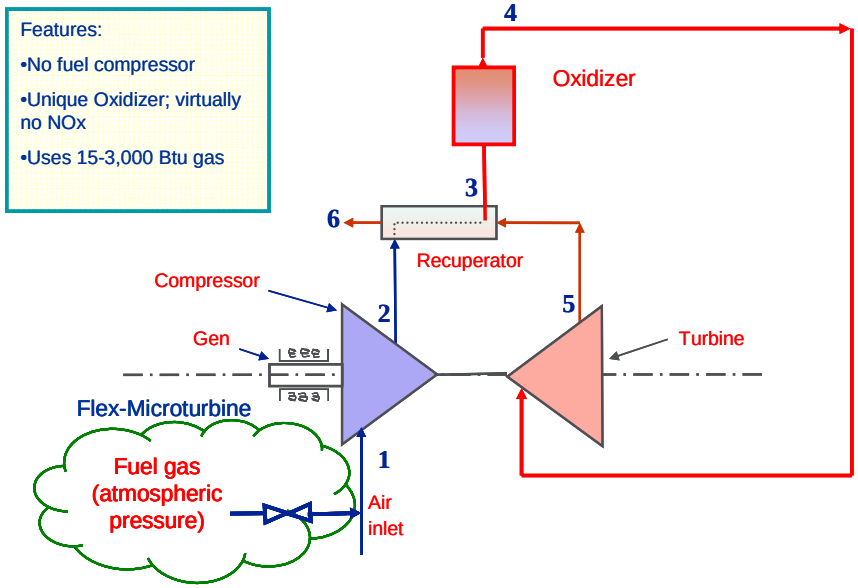

Capstone – Microturbine DG-CHP

- Capstone 60kW Microturbine-CHP
- Field Test Site
  - Supermarket on Long Island, NY
  - On-site power use and grid sales
  - Desiccant sub-cooling & space heat
  - Natural gas-fired
- Selected Results
  - Total efficiency: 71–81% (34% actual due to low heat demand)
  - NO_x emissions: 3.05–4.50 ppm
  - Emissions reduced: CO_2 8%, NO_x 17%

OfficePower, Inc.
Elliott Microturbine DG-CHP

- **Eight Elliott TA100 100 kW microturbines**
- **Field Test Site**
  - 110 East 59th Street, New York City
  - 39-story office building
  - On-site power use
  - Domestic hot water heating
  - Space heating
  - Future chiller installation
  - Natural gas fueled
- **Schedule**
  - Test plan completed April 2008
  - Performance verification scheduled for fall, 2008 (for heat utilization)
- **Project being completed in collaboration with NYSERDA**
- **Utilizes generic field testing protocol developed for ASERTTI and adopted by ETV GHG Center**

Climate Energy, LLC
Honda Freewatt Micro-DG-CHP

- **1.2 kW electrical generation**
- **12,000 Btu/h warm air or hydronic (hot water) heat**
- **Advanced Honda IC engine and inverter technology**
- **Installed in 50,000 homes in Japan**
- **Modules allow custom-designed installation**
  - power generation, co-generation heat exchanger, warm air space heating, hydronic heating, auxiliary water heating modules available
- **Residential application**
  - Host site under consideration
  - Performance verification tentatively scheduled for fall, 2008
- **Project being completed in collaboration with NYSERDA**
- **Utilizes generic field testing protocol developed for ASERTTI and adopted by ETV GHG Center**

Other Upcoming Verifications

- Distributed Generation – Combined Heat and Power
  - Six 100 kW Tecogen Engine CHP w/ hot water, space heat, cooling, thermal storage
  - 275 kW “pressure letdown” turbine for steam systems, oil and gas

NYSERDA

Contact Information

GHG Center Director

Timothy Hansen, Southern Research Institute

Telephone: 919-282-1052

Email: hansen@sri.org

GHG Center Project Officer

Lee Beck, U.S. EPA/ORD/NRMRL

Telephone: 919-541-0617

Email: beck.lee@epa.gov

ETV Web Site: http://www.epa.gov/etv

United States
Environmental Protection
Agency

Other DG-CHP slides

Ingersoll Rand – Microturbine DG-CHP

- 70 kW Microturbine CHP (*PowerWorks*)
- Field Test Site
  - Elder care facility in Morrisville, NY
  - On-site power use with grid sales
  - Space heat and hot water
  - Natural gas-fired
- Selected Results
  - Total efficiency: 46–51%
  - NO_x emissions: 0.86 ppm
  - Emissions reduced: CO_2 7%, NO_x 34%
  - Power quality: met/exceeded IEEE

Molten Carbonate Fuel Cell CHP

- Technology and Field Test Site
  - FuelCell Energy DFC 300A 250kw fuel cell and heat recovery unit (natural gas fueled)
  - State University of New York (SUNY) – Syracuse, NY
  - Dormitory power & space heat
  - Used ASERTTI / ETV Field Testing Protocol
- Results
  - Power quality within IEEE
  - Total efficiency: 66–68%
  - Emissions reduced:
    - NO_x: 2.0–3.5 ton/yr
    - CO_2: 588–1,020 ton/yr
    - Based on NY grid

Building Energy Systems, LLC – Tecogen CM100

- **Six 100 kW (125 kW peaking) units**
- **Advanced variable-speed IC engine and inverter technology**
- **Field test site**
  - Madison-Oneida BOCES campus, Verona, NY
  - on-site power use
  - chiller, domestic hot water, hydronic heating
  - 15,000 gallon thermal storage capacity
- **Developing 1-year monitoring plan in collaboration with NYSERDA**
  - capture seasonal shift between heating and cooling
  - evaluate thermal storage performance
- **Will utilize generic field testing protocol developed for ASERTTI and adopted by ETV GHG Center**

Steam Power Partners, LLC Carrier MicroSteam Turbine

- **275 kW power generation**
- **"Let-down" turbine replaces pressure reducing valve (PRV)**
  - recovers lost pressure energy as electricity
  - zero emissions
- **Process steam applications**
- **Pipeline gas or compressed air applications**
- **Applying for ETV performance verification**
- **Likely installations for field test site:**
  - 7 World Trade Center, New York City
  - Consolidated Edison, New York City
  - PG&E, San Francisco

Microturbine and Engine CHP Generic Verification Protocol

- Developed by Southern Research Institute for ASERTTI
- Generic Field Testing Protocol for Microturbine & Engine CHP applications
- Evaluate electrical, thermal, emissions performance
- Being adopted by ASERTTI, DOE, and state energy offices as a national standard protocol
- GHG Center adopting and publishing as an ETV GVP
- Also protocols available for lab testing/certification (to be adopted by UL, including reference to field testing), long term monitoring, and case studies
- National DG testing database being developed

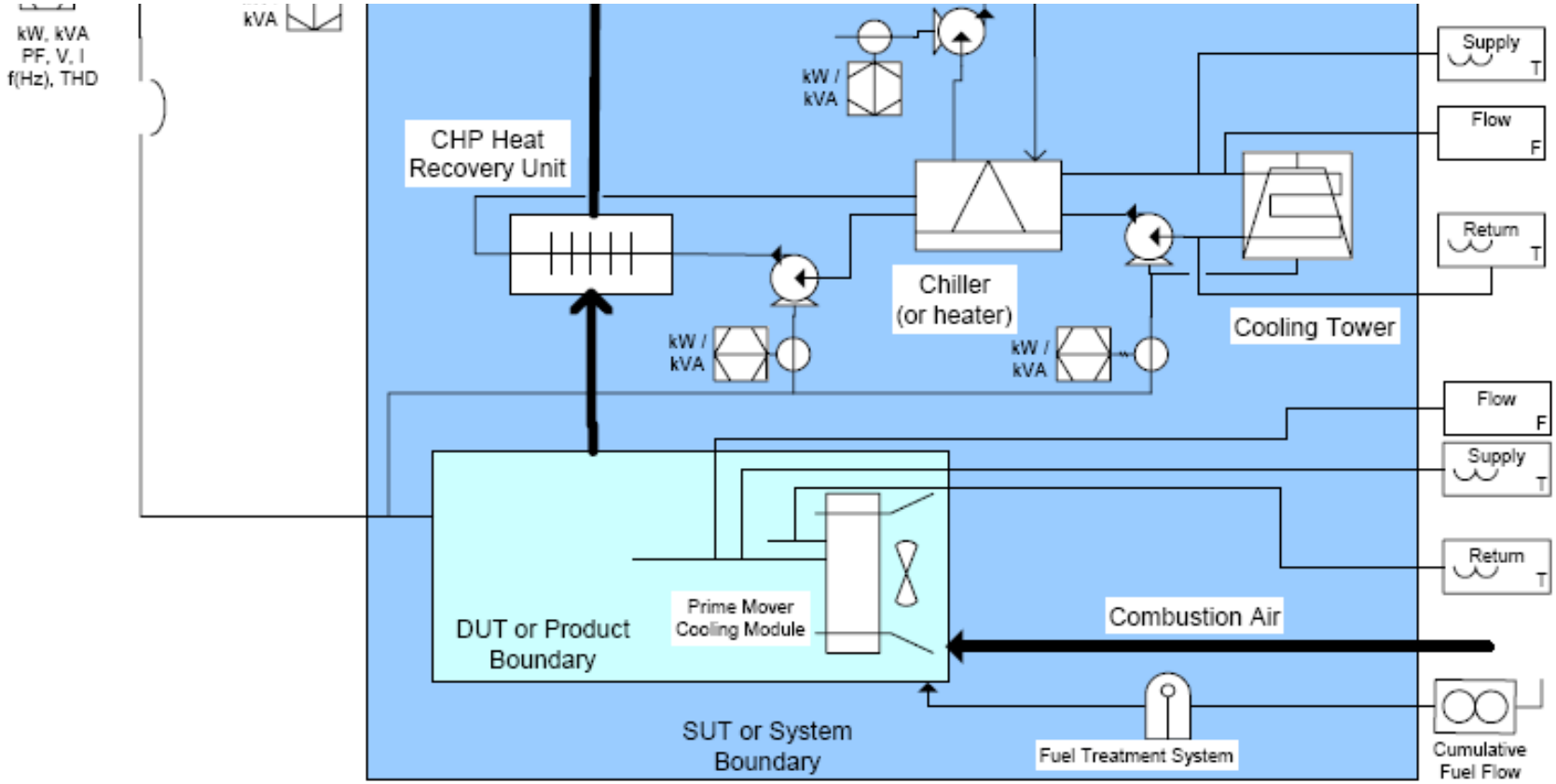

Figure 4-2. Example Hot Fluid-driven CHP System Schematic and Instrument Locations

Additional Planned Activities

- **GHG Standard and Protocol Integration**
  - GHG validation / offset / audit / regulatory programs and CO_2 credits
  - Standardized offset calculations and verification procedures (ISO, WRI)
- **Stakeholders**
  - Transportation, Advanced Energy, Gasification/Bioenergy/Biofuels subgroups
- **Technology Focus Areas**
  - DG-CHP (micro, renewables, cooling)
  - Green Building (CHP, renewables, HVAC and water systems)
  - Fuel efficiency in vehicles (many inquiries, few takers)
  - Biofuels and biofuels production
  - Oil and gas