Section P - Master List

Area ID	Cert. ID	Figures	Comments
*Signifies document has been stamped by a Professional Engineer			
Containment Areas			
Cont. A and B	Tankfarm A	Cert. Report*, S1*, C-101*	
	Tankfarm B	Cert. Report*, S1*, C-101*	
Cont. C and D	Tankfarm C	Cert. Report*, liner installation photos, P103-1*, P103-2*	
	Tankfarm D	Cert. Report*, liner installation photos, P103-1*, P103-2*	
Cont. E, F, and G	Tankfarm E	Cert. Report*	
	Tankfarm F	Cert. Report*	
	Tankfarm G	Cert. Report*	
Buildings			
Bldg. 1	Drum Storage Building #	Cert. Report*, D-2, D-3, Table D-1, DSB-101 (1 of 2)*, and DSB (2 of 2)*	
Bldg. 2	Drum Storage Building #	Cert. Report*, D-4, D-5, Table D-1, A-2, and A-3	
Process Units			
Vaccuum Pot	Vacuum Pot	Cert. Report*, E-2, E-4	
	S-1	Cert. Report*, E-2, E-4	
	S-2	Cert. Report*, E-2, E-4	
Thin Film Evaporator	Thin Film Evaporator Area	Cert. Report*, E-2, E-5	
	Thin Film Evaporator Flush Tank	Cert. Report*, E-2, E-5	
	Thin Film Evaporator Receiver	Cert. Report*, E-2, E-5	
Column 30	Reboiler	Cert. Report*, E-2, E-3	
	Separator	Cert. Report*, E-2, E-3	
Tanks			
TK-101	Tank T-101	Cert. Report*, Design Load/Seismic & Wind Analysis/ Check support column, base plate and anchor bolts*,Fig D-6	
TK-102	Tank T-102	Cert. Report*, Design Load/Seismic & Wind Analysis/ Check support column, base plate and anchor bolts*, Fig D-6	
TK-103	Tank T-103	Cert. Report*, Design Load/Seismic & Wind Analysis/ Check support column, base plate and anchor bolts*, Fig D-6	
TK-104	Tank T-104	Cert. Report*, Design Load/Seismic & Wind Analysis/ Check support column, base plate and anchor bolts*, Fig D-6	
TK-105	Tank T-105	Cert. Report*, Design Load/Seismic & Wind Analysis/ Check support column, base plate and anchor bolts*, Fig D-6	
TK-112	Tank T-112	Cert. Report*, Design Load/Seismic & Wind Analysis/ Check support column, base plate and anchor bolts*, Fig D-6	
TK-113	Tank T-113	Cert. Report*, Design Load/Seismic & Wind Analysis/ Check support column, base plate and anchor bolts*, Fig D-7	
TK-121	Tank T-121	Cert. Report*, Design Load/Seismic & Wind Analysis/ Check support column, base plate and anchor bolts*, Fig D-7	
TK-122	Tank T-122	Fig D-7	
TK-123	Tank T-123	Cert. Report*, Design Load/Seismic & Wind Analysis/ Check support column, base plate and anchor bolts*, Fig D-7	
TK-124	Tank T-124	Cert. Report*, Design Load/Seismic & Wind Analysis/ Check support column, base plate and anchor bolts*, Fig D-7	
TK-132	Tank T-132	Cert. Report*, Design Load/Seismic & Wind Analysis/ Check support column, base plate and anchor bolts*, Fig D-9*	T-132 becomes proposed T-401 for permit
TK-136	Tank T-136	Cert. Report*, Design Load/Seismic & Wind Analysis/ Check support column, base plate and anchor bolts*, Fig-10*	T-136 becomes proposed T-301 for permit
TK-108 and TK-109		Tank 108 and 109 cut sheet; Fig D-8*	PE stamped as 30% design drawing
TK-137 and TK-138		Tank 137 and 138 cut sheet; Fig D-8*	PE stamped as 30% design drawing
TK-401, 402, and 403		Tank 401 to 403 cut sheet; Fig D-9*	PE stamped as 30% design drawing
TK-411, 412, and 413		Tank 411 to 413 cut sheet; Fig D-9*	PE stamped as 30% design drawing
TK-301, 302, and 303		Tank 301 to 303 cut sheet; Fig D-10*	PE stamped as 30% design drawing
TK-311, 312, and 313		Tank 311 to 313 cut sheet; Fig D-10*	PE stamped as 30% design drawing

TK-321, 322, and 323		Tank 321 to 323 cut sheet; Fig D-10*	PE stamped as 30% design drawing
TK-304, 305, 306, and 307		Tanks 304 to 307 cut sheet; Fig D-11*	PE stamped as 30% design drawing
TK-308 and 309		Tank 308 and 309 cut sheet; Fig D-11*	PE stamped as 30% design drawing
TK-511 and 512		Tank 511 and 512 cut sheet; Fig D-11*	PE stamped as 30% design drawing

* Signifies document has been stamped by a Professional Engineer

Container Storage Area Certification

Drum Storage Building #1

Prepared for: Romic Environmental Technologies Corp,
6760 West Allison Road
Chandler, AZ 85226

Prepared by: Metro Environmental Services, Inc.
1256-B West Brooks Street
Ontario, CA 91762

INTRODUCTION

On January 26, 2005, in accordance with 40 CFR Section 264.175, "Containment", Metro Environmental Services, Inc. performed an assessment of Drum Storage Building #1 at the Romic Environmental Technologies Corp facility located at 6760 West Allison Road in Chandler, Arizona.

ASSESSMENT ITEMS

Containment Area Base

Drum Storage Building #1 is constructed of 6-inch thick, 3,750-psi concrete with one mat of #5 rebar placed at 18" spacing on center in both directions. A polyethylene liner was installed under the entire building during construction. Chemical resistant waterstops were installed at cold joints in the slab.

Containment Volume

The total containment volume available for Drum Storage Building #1 is 41,078 gallons. The required containment volume is 12,144 gallons. See the attached containment volume calculations for details.

CERTIFICATION

I hereby certify that this containment system is suitably designed to achieve the requirements of 40 CFR 264.175.

I certify under penalty of law that this document was prepared under my direction and supervision in accordance with a system designed to assure that qualified personnel properly gather and evaluate the information submitted. Based on my inquiry of the person or persons who manage the system, or those persons directly responsible for gathering the information, the information submitted is, to the best of my knowledge and belief, true, accurate, and complete. I am aware that there are significant penalties for submitting false information, including the possibility of fine and imprisonment for knowing violations.

REGISTERED PROFESSIONAL ENGINEER
GEORGE ONEY
exp 6/30/05
No. CH004494
CHEMICAL
STATE OF CALIFORNIA

George A. Oney, P.E.
Chemical Engineer
Registration No. CH004494

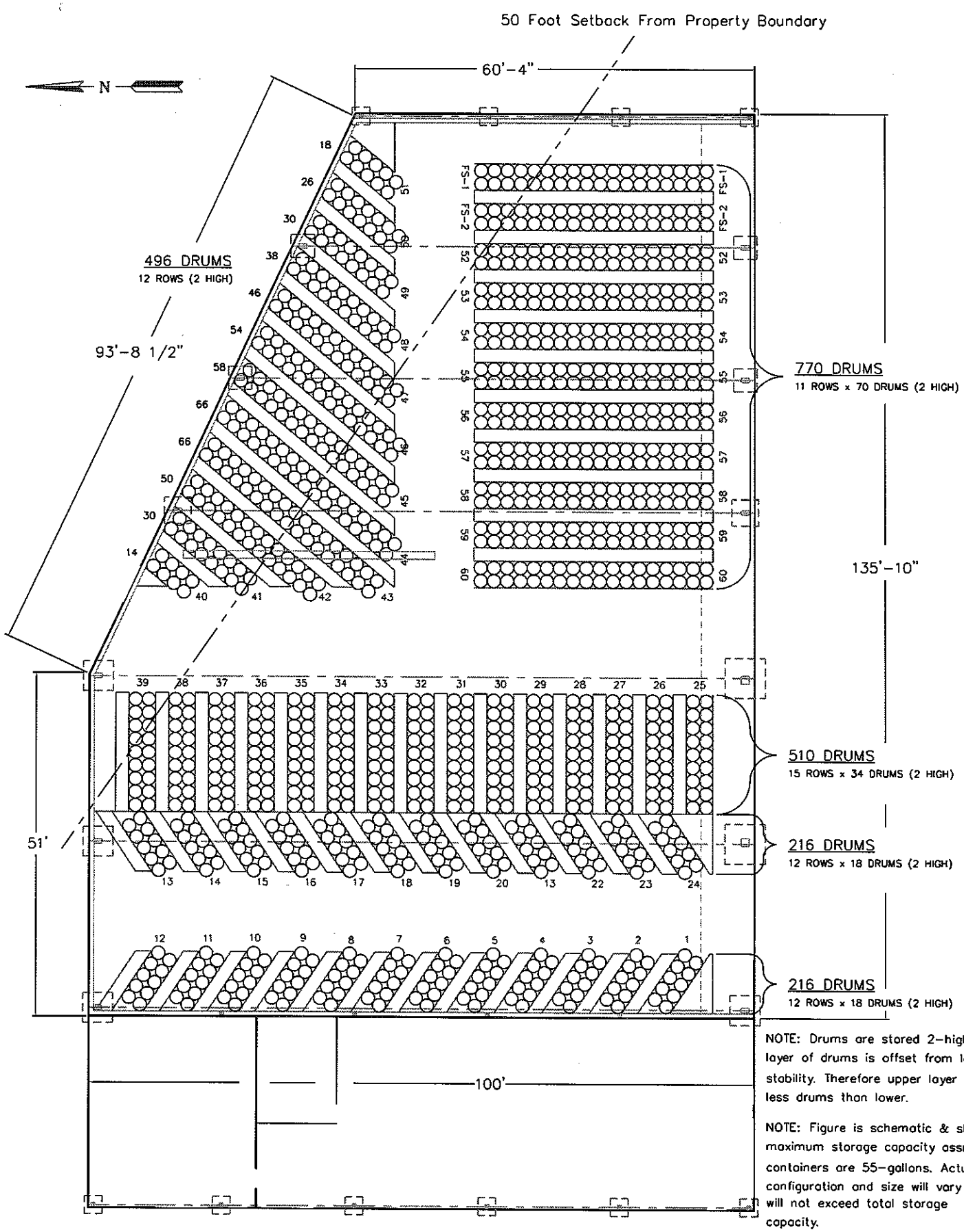

NOTE: Drums are stored 2-high. Upper layer of drums is offset from lower for stability. Therefore upper layer has two less drums than lower.

NOTE: Figure is schematic & shows maximum storage capacity assuming all containers are 55-gallons. Actual configuration and size will vary but will not exceed total storage capacity.

REV	DATE	REVISION	APP
2	10/04	Change rows to FS-1, FS-2	NT
1	3/04	Various revisions	NT

DRAWN BY: ROBERT T. PIGNATTI

ROMIC
ENVIRONMENTAL TECHNOLOGIES
ENGINEERING DEPARTMENT

ROMIC - SOUTHWEST
CHANDLER, ARIZONA
DRUM STORAGE
BUILDING 1

DATE: 12-05-02
SCALE: NONE

D-2

I:rsw_portb_04_final\drumstorage\fig_d2

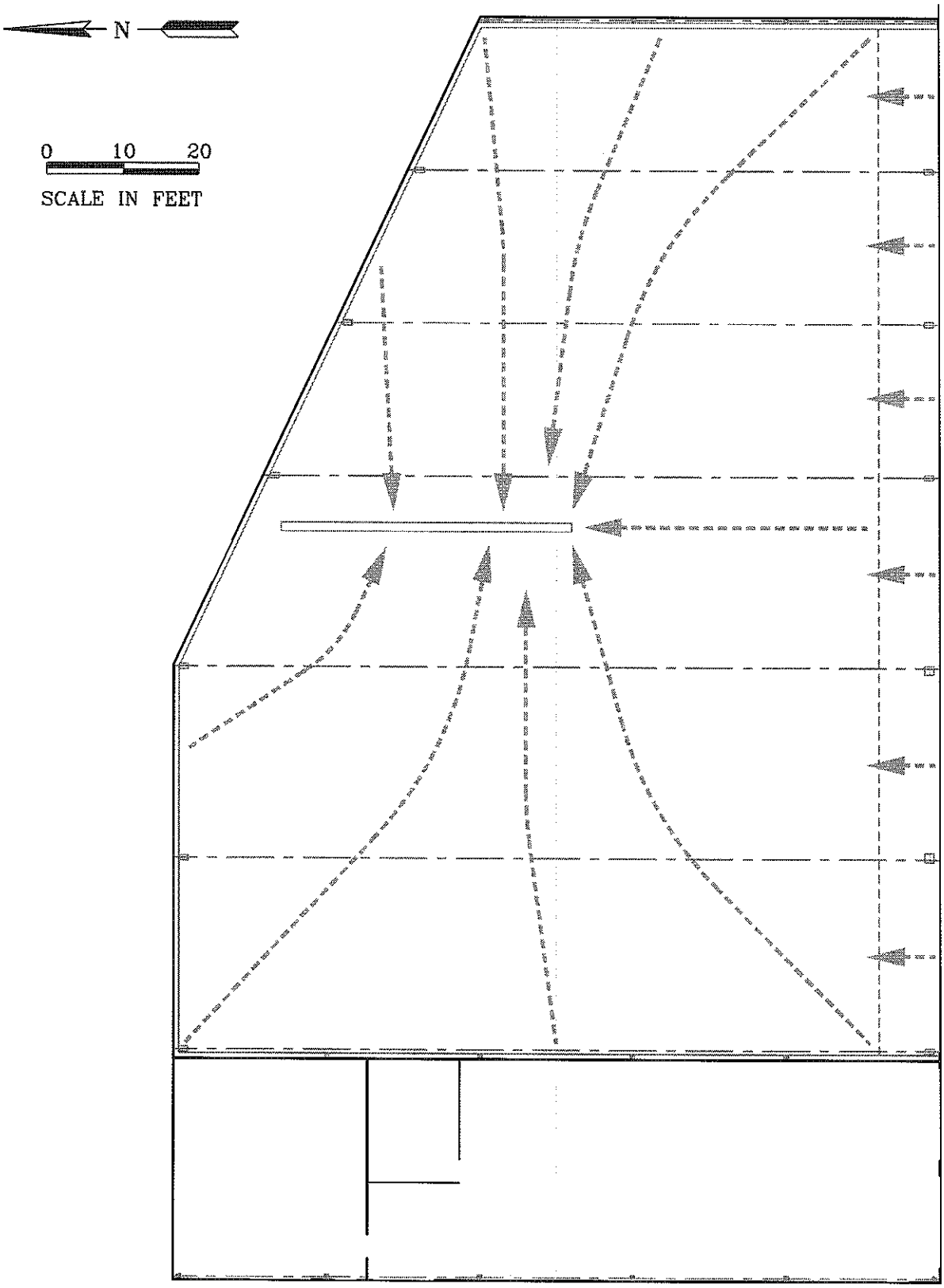

REV	DATE	REVISION	APP
1	4/04	Updated border	RP

DRAWN BY: ROBERT T. PIONATTI

ROMIC
ENVIRONMENTAL TECHNOLOGIES
ENGINEERING DEPARTMENT

ROMIC – SOUTHWEST
CHANDLER, ARIZONA

DRAINAGE IN STORAGE BUILDING #1

DATE: 12-05-02
SCALE: NONE

D-3

I:rsw_partb_04_final\drumstorage\fig_d3

TAE D-1

SECONDARY CONTAINMENT CALCULATIONS FOR CONTAINER STORAGE AREAS

STORAGE/PROCESS AREA	Length (ft)	Width (ft)	Containment Area (ft^2)	Min Depth (in)	Max Depth (in)	# Drums on Floor	# Drums Stacked	Total Drums	Gallons Equivalent	Containment Required (gal) (10% of quantity stored)	Containment Required (ft^3) (7.48 gal/ft^3)	Gross Containment (ft^3)	Displacement from Drums (ft^3)	Net Available Containment (ft^3)
CONTAINER STORAGE BUILDING #1														
Rows 1-39	51	100	5100.0	8	8	510	432	942	51810			3400.0	1068.1	
Rows 40-51	84.83	39.67	1682.5	8	8	260	236	496	27280			1121.7	544.5	
Rows 52-62	84.83	60.33	5118.3	8	8	396	374	770	42350			3412.2	829.4	
						1166	1042	2208	121440	12144	1623.5	7933.9	2442.1	5491.8
CONTAINER STORAGE BUILDING #2														
Bay 1 - Rows 80-81	26.833	14.17	380.1	2	8	52	48	100	5500			158.4	68.1	
Bay 2 - Rows 82-83	26.833	14.17	380.1	2	8	52	48	100	5500			158.4	68.1	
Bay 3 - Rows 84-85	26.833	14.17	380.1	2	8	52	48	100	5500			158.4	68.1	
Bay 4 - Rows 86-87	26.833	14.17	380.1	2	8	52	48	100	5500			158.4	68.1	
Bay 5 - Rows 88-89	26.833	14.17	380.1	2	8	52	48	100	5500			158.4	68.1	
Bay 6 - Rows 90-91	26.833	14.17	380.1	2	8	52	48	100	5500			158.4	68.1	
Bay 7 - Rows 92-93	26.833	14.17	380.1	2	8	52	48	100	5500			158.4	68.1	
Bay 8 - Rows 94-95	26.833	14.17	380.1	2	8	52	48	100	5500			158.4	68.1	
Bay 9 - Rows 96-97	26.833	14.17	380.1	2	8	52	48	100	5500			158.4	68.1	
Bay 10 - Rows 98-99	26.833	14.17	380.1	2	8	52	48	100	5500			158.4	68.1	
						520	480	1000	55000	5500	735.3	1583.9	680.7	903.2

Notes:

Calculations assume maximum storage capacity assuming all container are 55-gallons drums (see Figure D-2). Various types of containers (e.g., tri-wall boxes, intermediate bulk containers, or "totes," 5-gallon cans) may be stored in these buildings.

Displacement from drums is the secondary containment space taken up by drums sitting in containment. Displacement calculated using formula: $pi*r^2*h$, where r is the radius of a drum (one foot), and h is the height of the berm.

Secondary containment capacity is deemed adequate if the Net Available Containment is greater than the Containment Required.

Containment capacity for bays in Building 2 calculated by multiplying surface area of bay by average depth (i.e., 5").

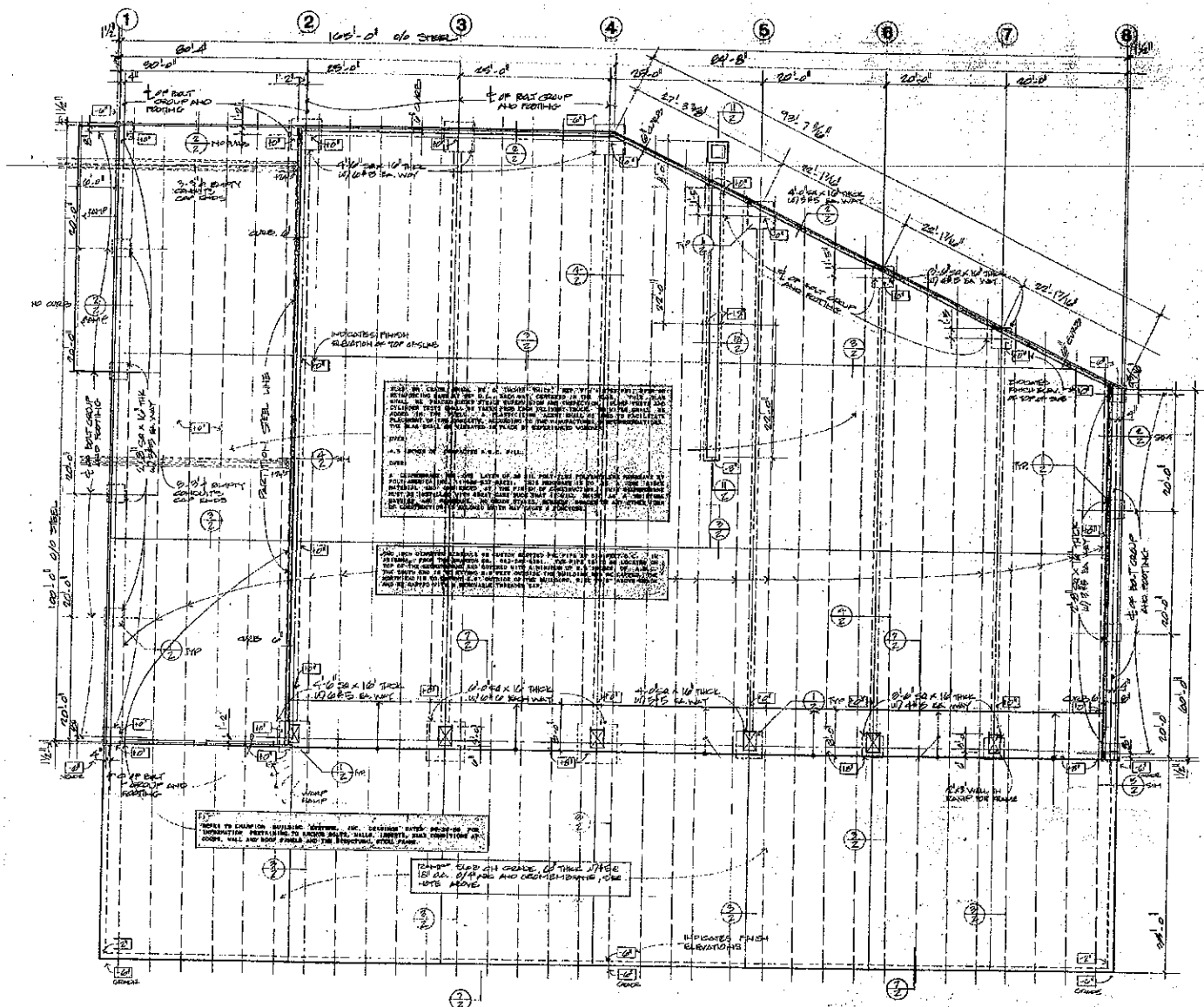

FOUNDATION PLAN 1/8" = 1'-0"

GENERAL STRUCTURAL NOTES

DRUM STORAGE BUILDING
FOR
ROMIC CHEMICAL CORPORATION
SOUTHWEST

REVISED: 08/14/88
REVISED: 07/17/88
REVISED: 11-6-88

DSB-101 1 OF 2

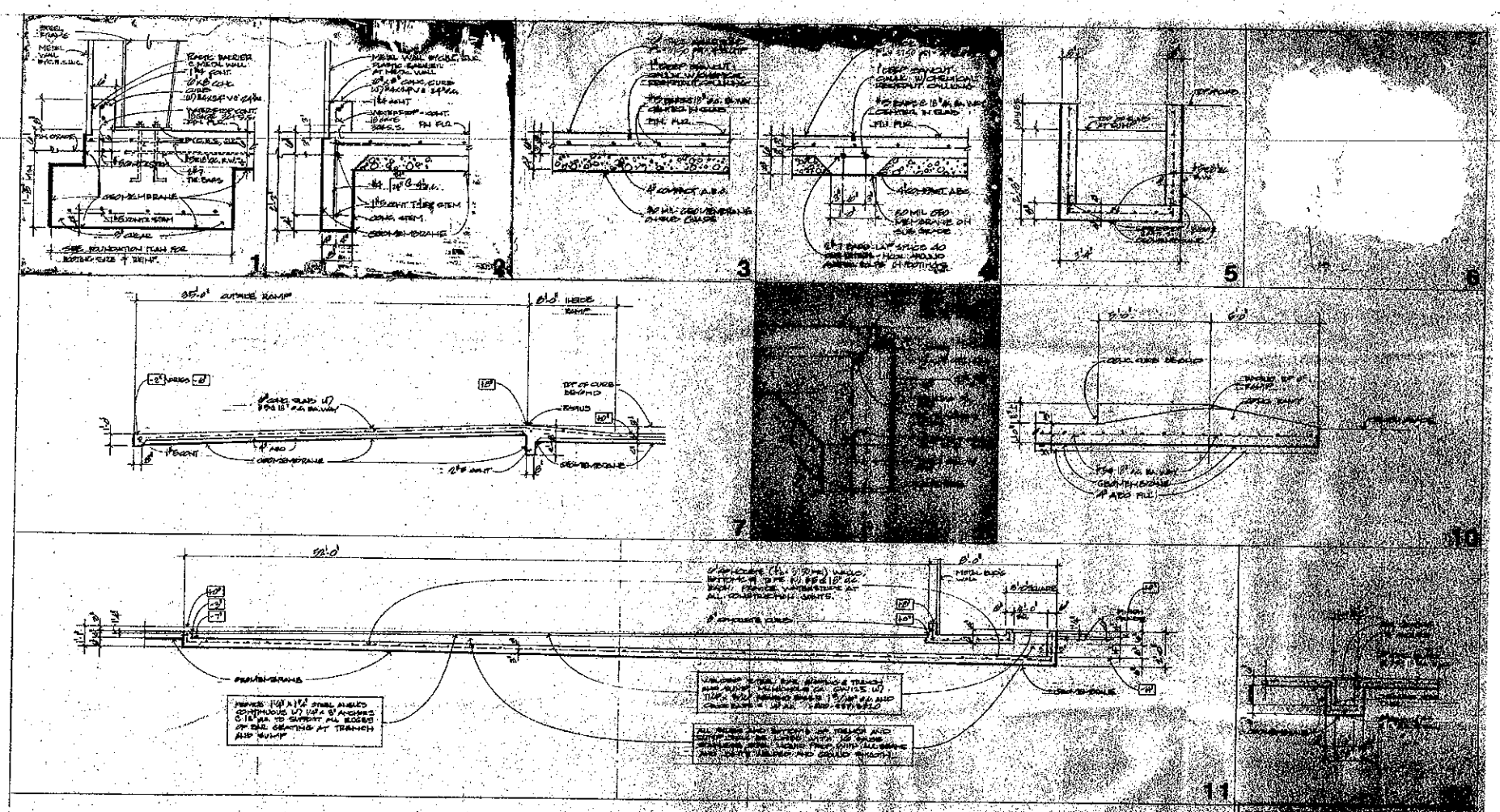
1
2
3
4
5
6
7
10
11
GEOMEMBRANE
CONC. STEM
TOP OF CURB BEYOND
RADIUS
52'-0"
8'-0"
METAL BLDG WALL
GEOMEMBRANE

DSB-101 2 OF 2

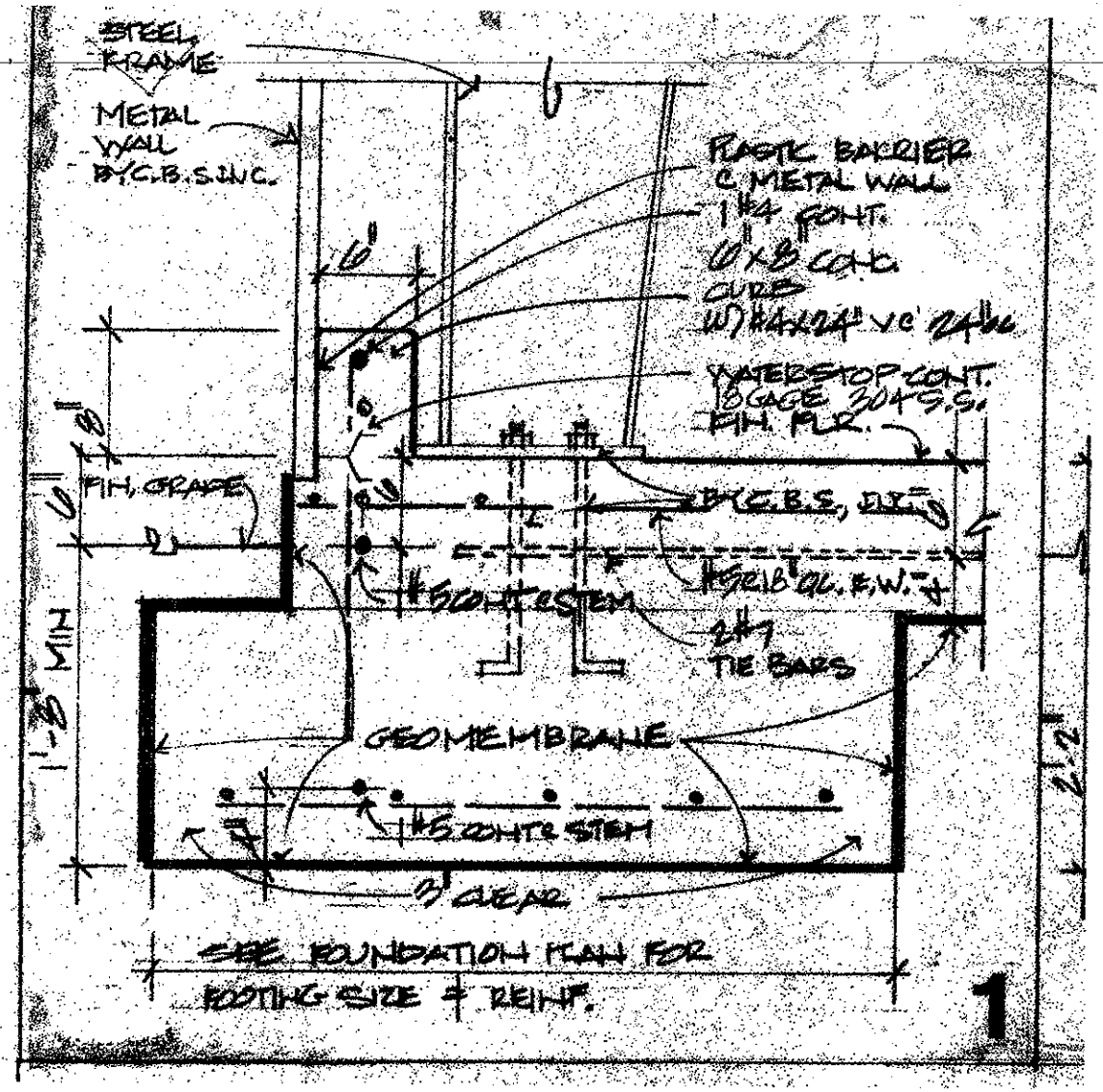
STEEL FRAME
METAL WALL BY C.B.S. INC.
PLASTIC BARRIER @ METAL WALL
1#4 CONT.
6"x8" CONC. CURB W/ #4x24" VC 24" oc
WATERSTOP CONT. 18 GAGE 304 S.S.
FIN. FLR.
FIN. GRADE
BY C.B.S. INC.
#5 @ 18" OC. E.W.
#5 CONT @ STEM
2#7 TIE BARS
GEOMEMBRANE
#5 CONT @ STEM
3' CLEAR
SEE FOUNDATION PLAN FOR FOOTING SIZE & REINF.
1'-8" MIN
2'-2"
1

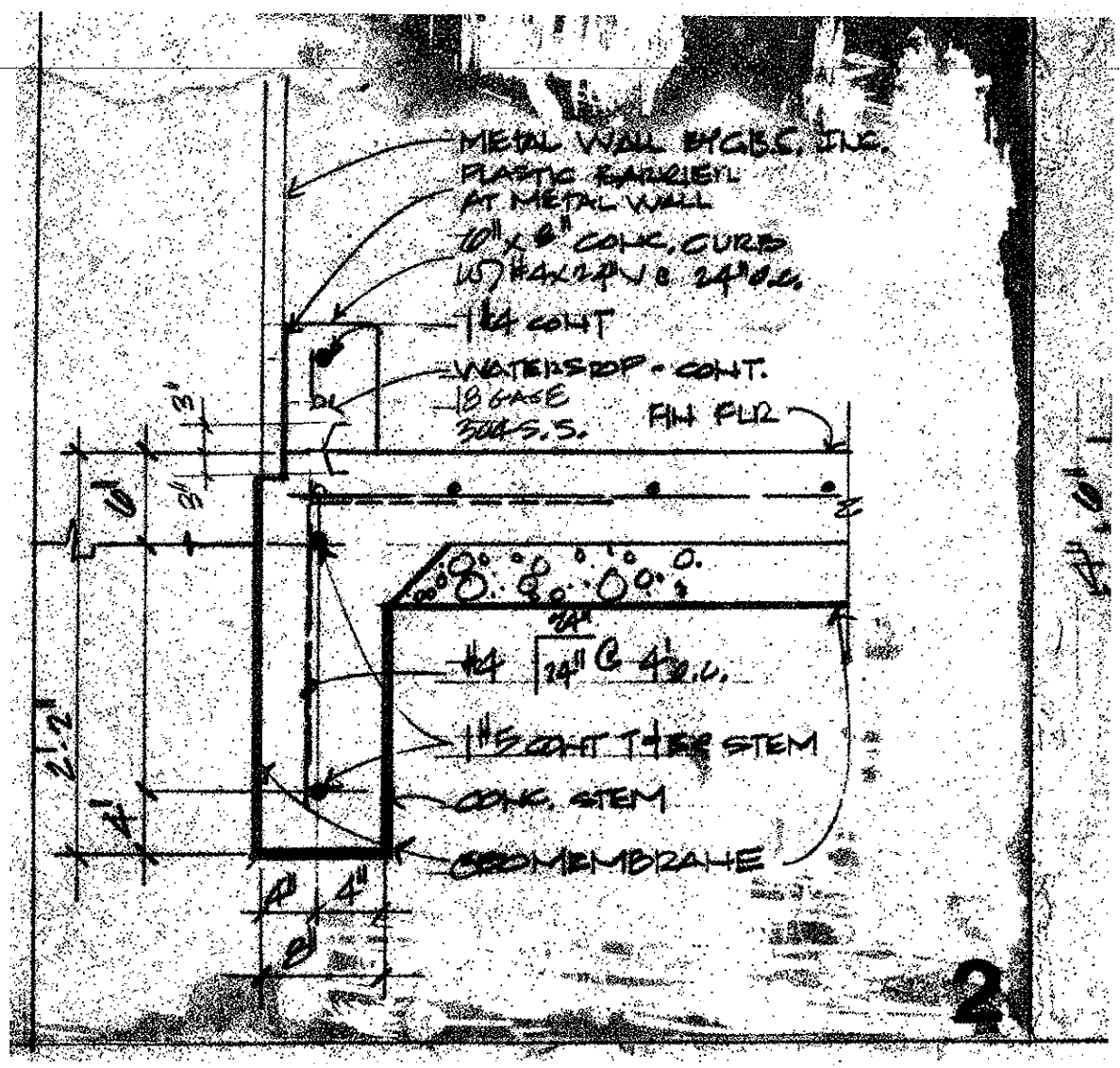
METAL WALL BY G.B.S. INC.
PLASTIC BARRIER
AT METAL WALL
CONC. CURB
#4 CONT
WATERSTOP - CONT.
18 GAGE
304 S.S.
FIN FLR
#4 24" @ 4' o.c.
1#5 CONT T&B STEM
CONC. STEM
GEOMEMBRANE
2

Container Storage Area Certification

Drum Storage Building #2

Prepared for: Romic Environmental Technologies Corp,
6760 West Allison Road
Chandler, AZ 85226

Prepared by: Metro Environmental Services, Inc.
1256-B West Brooks Street
Ontario, CA 91762

INTRODUCTION

On February 2, 2005, in accordance with 40 CFR Section 264.175, "Containment", Metro Environmental Services, Inc. performed an assessment of Drum Storage Building #2 at the Romic Environmental Technologies Corp facility located at 6760 West Allison Road in Chandler, Arizona.

ASSESSMENT ITEMS

Containment Area Base

Drum Storage Building #2 is constructed of 6-inch thick concrete with one mat of #5 rebar placed at 12" spacing on center in both directions. A polyethylene liner was installed under the entire building during construction. Chemical resistant waterstops were installed at cold joints in the slab.

Containment Volume

The total containment volume available for Drum Storage Building #2 is 6,755 gallons. The required containment volume is 5,500 gallons. See the attached containment volume calculations for details.

CERTIFICATION

I hereby certify that this containment system is suitably designed to achieve the requirements of 40 CFR 264.175.

I certify under penalty of law that this document was prepared under my direction and supervision in accordance with a system designed to assure that qualified personnel properly gather and evaluate the information submitted. Based on my inquiry of the person or persons who manage the system, or those persons directly responsible for gathering the information, the information submitted is, to the best of my knowledge and belief, true, accurate, and complete. I am aware that there are significant penalties for submitting false information, including the possibility of fine and imprisonment for knowing violations.

REGISTERED PROFESSIONAL ENGINEER
GEORGE ONEY
exp 6/30/05
No. CH004494
CHEMICAL
STATE OF CALIFORNIA

George A. Oney, P.E.
Chemical Engineer
Registration No. CH004494

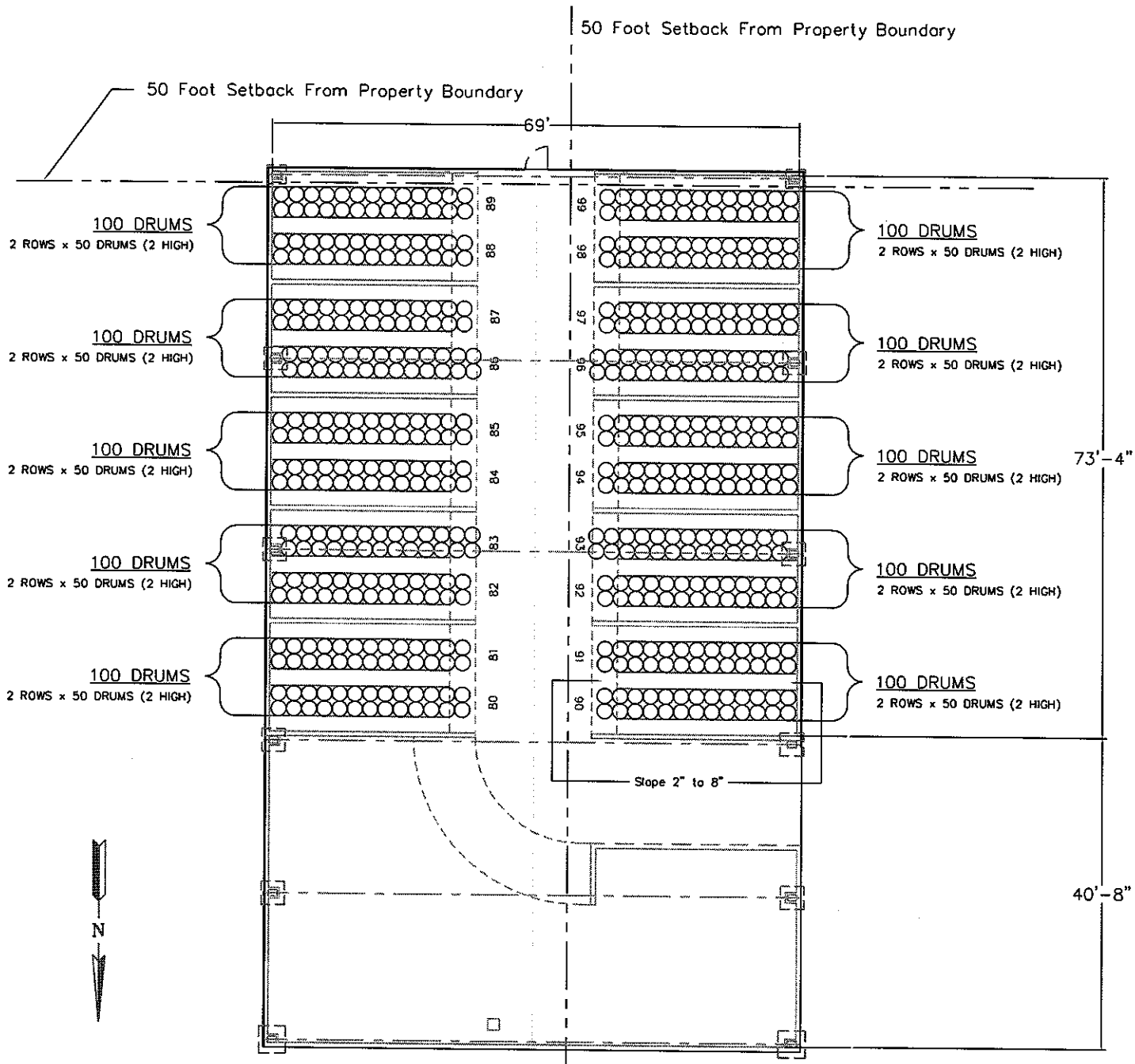

NOTE: Drums are stored 2-high. Upper layer of drums is offset from lower for stability. Therefore upper layer has two less drums than lower.

NOTE: Figure is schematic & shows maximum storage capacity assuming all containers are 55-gallons. Actual configuration and size will vary but will not exceed total storage capacity.

REV	DATE	REVISION	APP
1	3/04	Various revisions	MT

DRAWN BY: ROBERT T. PIGNATTI

ROMIC
ENVIRONMENTAL TECHNOLOGIES
ENGINEERING DEPARTMENT

ROMIC - SOUTHWEST
CHANDLER, ARIZONA
DRUM STORAGE
BUILDING 2

DATE: 12-05-02
SCALE: NONE

D-4

I:rsw_portb_04_final\drumstorage\fig_D4

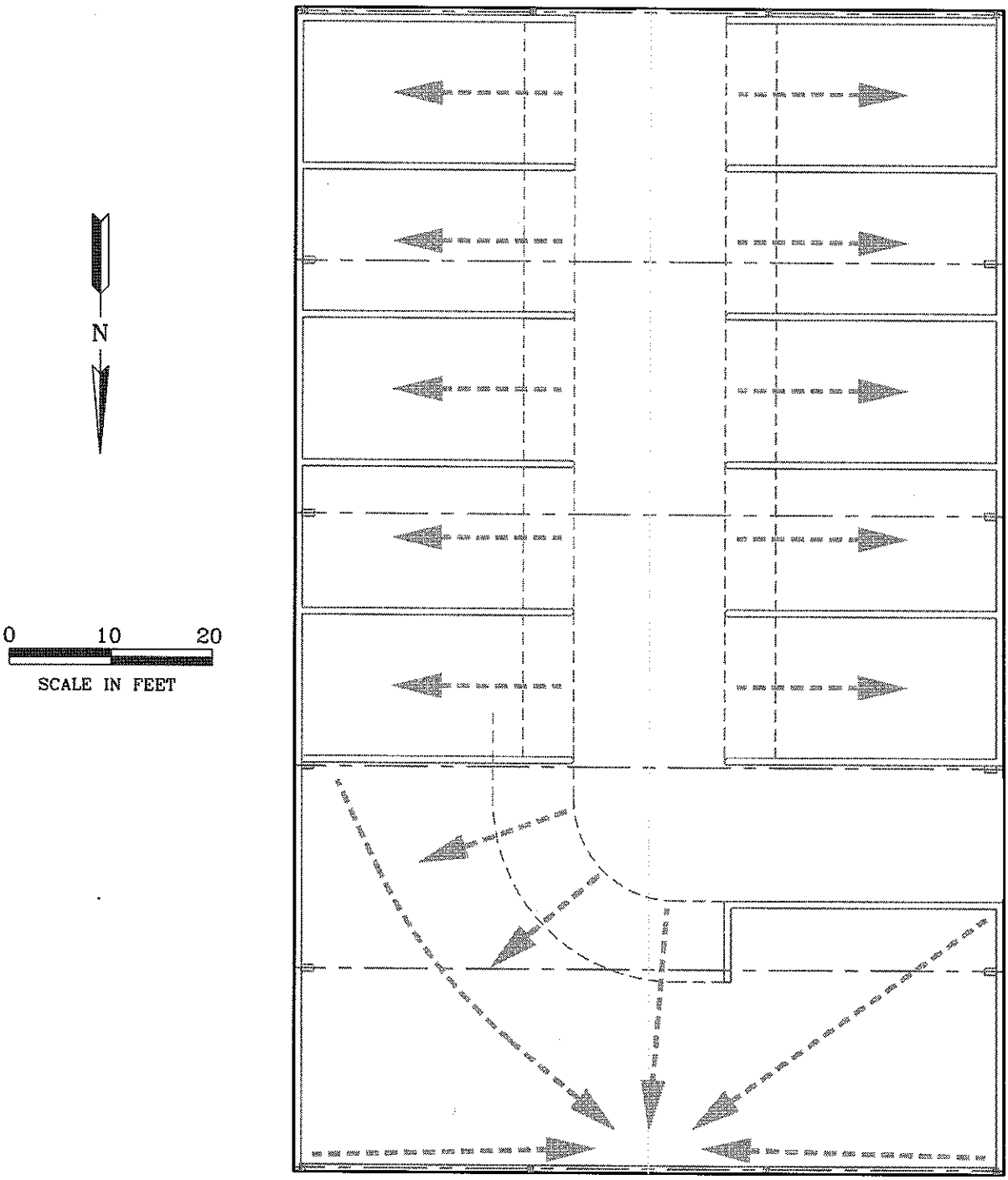

REV	DATE	REVISION	APP
1	4/04	Updated titleblock	WK

DRAWN BY: ROBERT T. PIONATTI

ROMIC
ENVIRONMENTAL TECHNOLOGIES
ENGINEERING DEPARTMENT

ROMIC - SOUTHWEST
CHANDLER, ARIZONA

DRAINAGE IN STORAGE BUILDING #2

DATE: 12-05-02
SCALE: NONE

D-5

I:rsw_portb_04_final\drumstorage\fig_D5

TAE D-1

SECONDARY CONTAINMENT CALCULATIONS FOR CONTAINER STORAGE AREAS

STORAGE/PROCESS AREA	Length (ft)	Width (ft)	Containment Area (ft^2)	Min Depth (in)	Max Depth (in)	# Drums on Floor	# Drums Stacked	Total Drums	Gallons Equivalent	Containment Required (gal) (10% of quantity stored)	Containment Required (ft^3) (7.48 gal/ft^3)	Gross Containment (ft^3)	Displacement from Drums (ft^3)	Net Available Containment (ft^3)
CONTAINER STORAGE BUILDING #1														
Rows 1-39	51	100	5100.0	8	8	510	432	942	51810			3400.0	1068.1	
Rows 40-51	84.83	39.67	1682.5	8	8	260	236	496	27280			1121.7	544.5	
Rows 52-62	84.83	60.33	5118.3	8	8	396	374	770	42350			3412.2	829.4	
						1166	1042	2208	121440	12144	1623.5	7933.9	2442.1	5491.8
CONTAINER STORAGE BUILDING #2														
Bay 1 - Rows 80-81	26.833	14.17	380.1	2	8	52	48	100	5500			158.4	68.1	
Bay 2 - Rows 82-83	26.833	14.17	380.1	2	8	52	48	100	5500			158.4	68.1	
Bay 3 - Rows 84-85	26.833	14.17	380.1	2	8	52	48	100	5500			158.4	68.1	
Bay 4 - Rows 86-87	26.833	14.17	380.1	2	8	52	48	100	5500			158.4	68.1	
Bay 5 - Rows 88-89	26.833	14.17	380.1	2	8	52	48	100	5500			158.4	68.1	
Bay 6 - Rows 90-91	26.833	14.17	380.1	2	8	52	48	100	5500			158.4	68.1	
Bay 7 - Rows 92-93	26.833	14.17	380.1	2	8	52	48	100	5500			158.4	68.1	
Bay 8 - Rows 94-95	26.833	14.17	380.1	2	8	52	48	100	5500			158.4	68.1	
Bay 9 - Rows 96-97	26.833	14.17	380.1	2	8	52	48	100	5500			158.4	68.1	
Bay 10 - Rows 98-99	26.833	14.17	380.1	2	8	52	48	100	5500			158.4	68.1	
						520	480	1000	55000	5500	735.3	1583.9	680.7	903.2

Notes:

Calculations assume maximum storage capacity assuming all container are 55-gallons drums (see Figure D-2). Various types of containers (e.g., tri-wall boxes, intermediate bulk containers, or "totes," 5-gallon cans) may be stored in these buildings.

Displacement from drums is the secondary containment space taken up by drums sitting in containment. Displacement calculated using formula: $pi*r^2*h$, where r is the radius of a drum (one foot), and h is the height of the berm.

Secondary containment capacity is deemed adequate if the Net Available Containment is greater than the Containment Required.

Containment capacity for bays in Building 2 calculated by multiplying surface area of bay by average depth (i.e., 5").

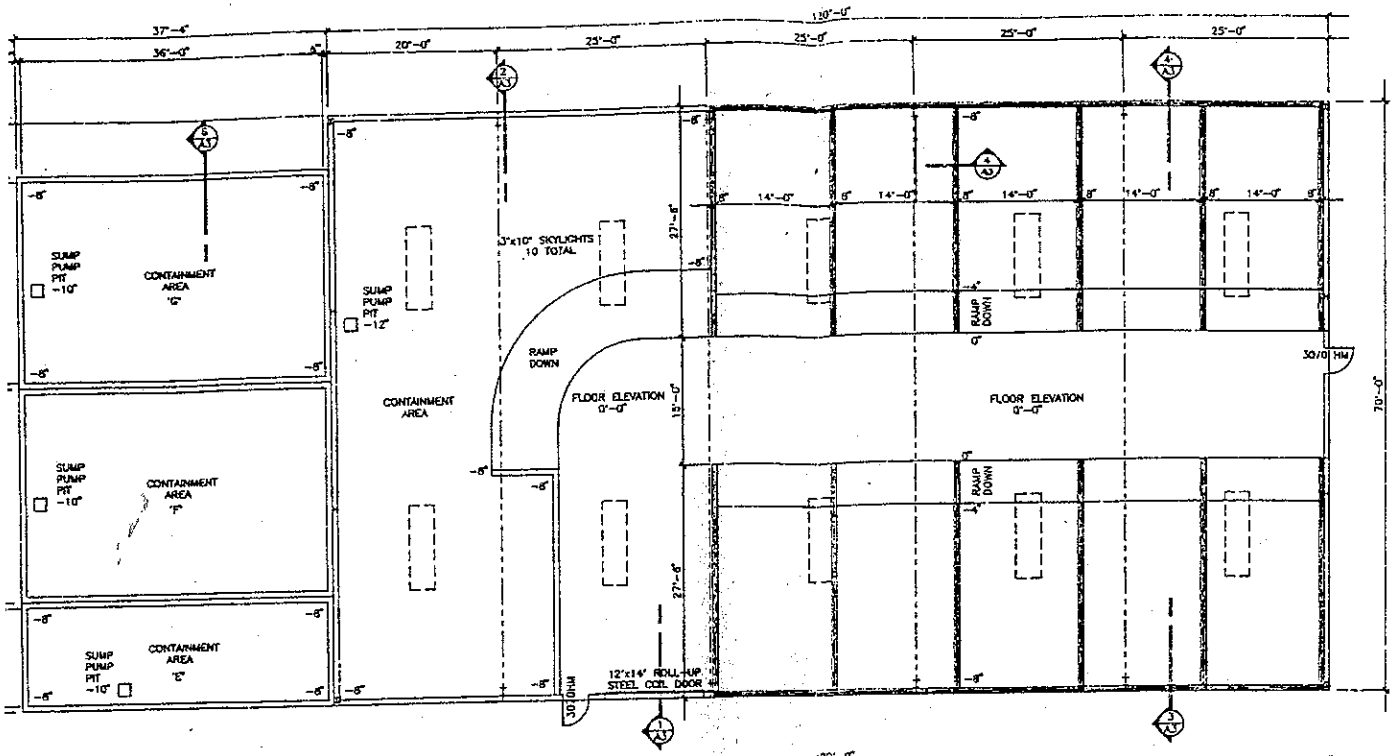

NORTH

FLOOR PLAN

SCALE: 1/8" = 1'-0"

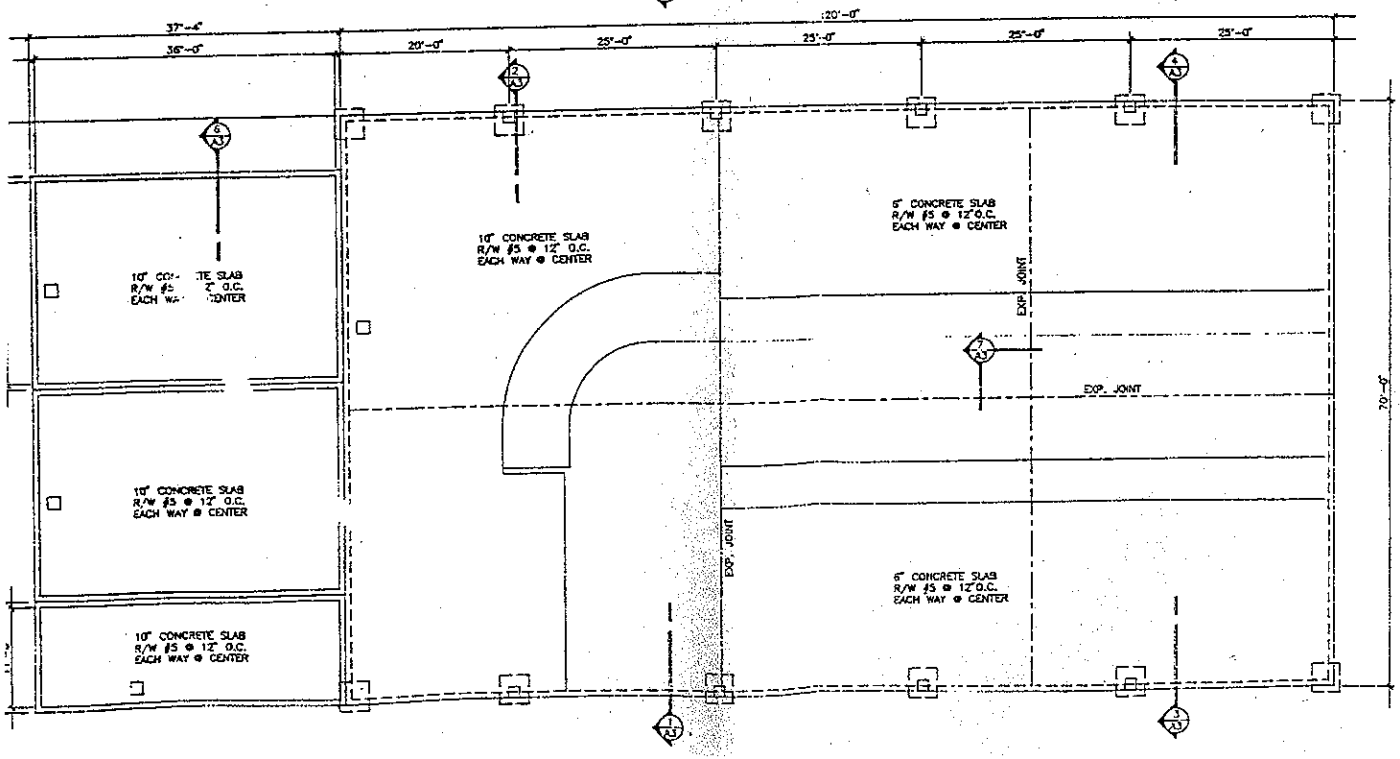

NORTH

FOUNDATION PLAN

SCALE: 1/8" = 1'-0"

3131 N. 84th Street, Phoenix, Arizona 85018 (602) 947-1700

Overby ARCHITECTS, INC.

Robert N. Ewing

GENERAL CONTRACTOR, INC.
4138 N. 12th Street
Phoenix, AZ 85014

ROMIC
CHEMICAL CORPORATION
DRUM STORAGE BUILDING
LONE BUTTE INDUSTRIAL PARK ARIZONA

JOB NO 9202
DATE 2/3/92
DRAWN DON
SCALE 1/8"=1'-0"
REVISIONS

A-2

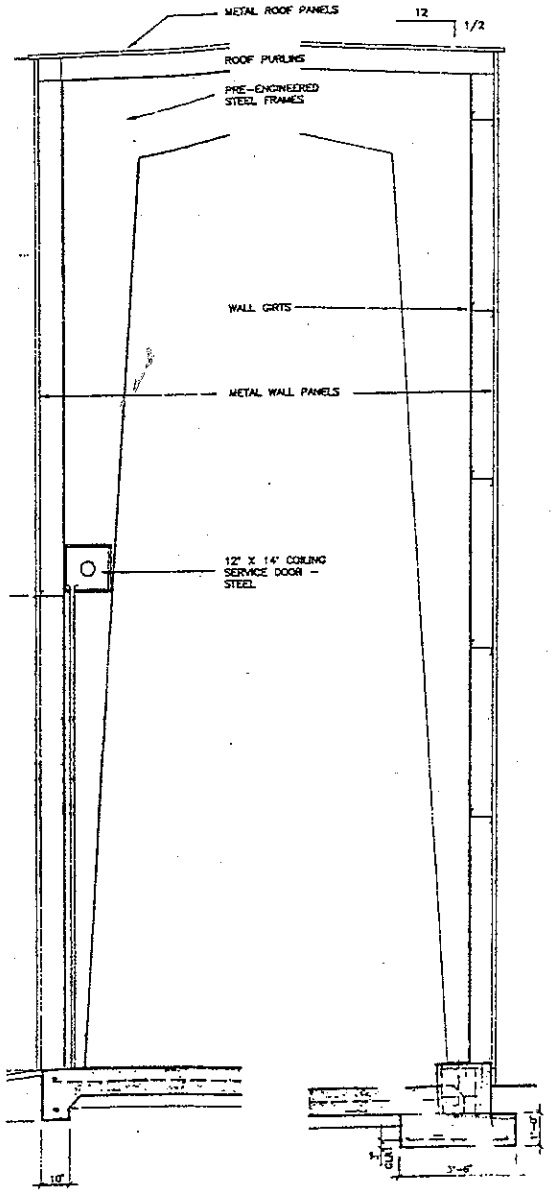

2

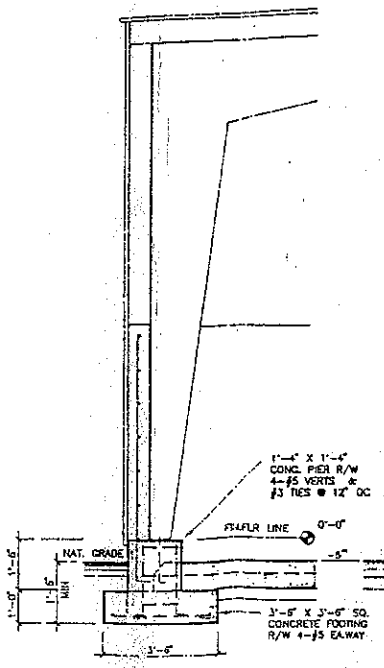

3

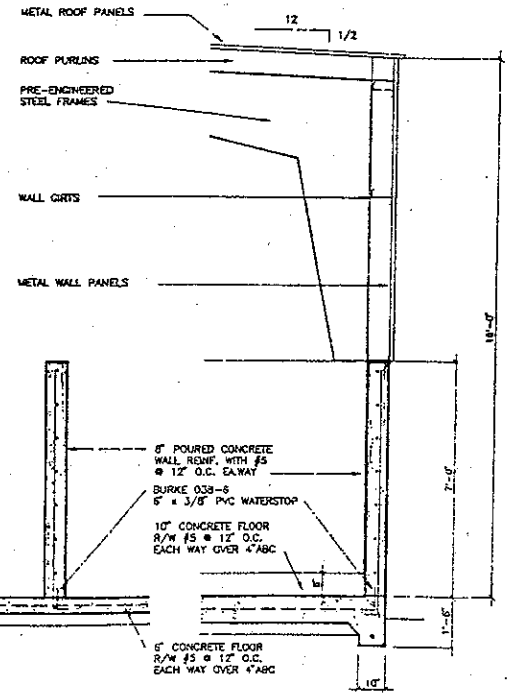

4

5

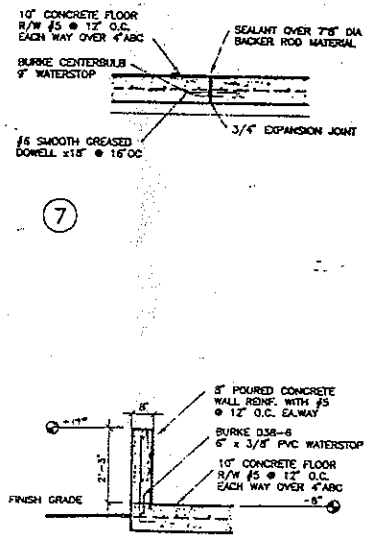

7

6

Overby ARCHITECTS, INC.
3131 N. 56th Street, Phoenix, Arizona 85018 (602) 947-1700

Robert N. Ewing
GENERAL CONTRACTOR, INC.
4136 N. 32nd Street
Phoenix, AZ 85014

ROMIC CHEMICAL CORPORATION
DRUM STORAGE BUILDING
LONE BUTTE INDUSTRIAL PARK ARIZONA

JOB NO 9202
DATE 2/3/92
DRAWN DOH
SCALE 1/2"=1'-0"
REVISIONS

A-3

Process Area Certification

Thin Film Evaporator Area

Prepared for: Romic Environmental Technologies Corp,
6760 West Allison Road
Chandler, AZ 85226

Prepared by: Metro Environmental Services, Inc.
1256-B West Brooks Street
Ontario, CA 91762

INTRODUCTION

On February 2, 2005, Metro Environmental Services, Inc. performed an assessment of the Thin Film Evaporator Area at the Romic Environmental Technologies Corp facility located at 6760 West Allison Road in Chandler, Arizona.

ASSESSMENT ITEMS

Containment Area Base

The Thin Film Evaporator Area is constructed of 10-inch thick, minimum 3,000-psi concrete with two mats of #5 rebar placed at 12" spacing on center each way. A polyethylene liner was installed under the containment area during construction.

CERTIFICATION

Based upon my professional expertise and judgement this containment system has been properly designed and installed to achieve the requirements of 40 CFR 264.193.

I certify under penalty of law that this document was prepared under my direction and supervision in accordance with a system designed to assure that qualified personnel properly gather and evaluate the information submitted. Based on my inquiry of the person or persons who manage the system, or those persons directly responsible for gathering the information, the information submitted is, to the best of my knowledge and belief, true, accurate, and complete. I am aware that there are significant penalties for submitting false information, including the possibility of fine and imprisonment for knowing violations.

REGISTERED PROFESSIONAL ENGINEER
GEORGE ONEY
exp 6/30/05
No. CH004494
CHEMICAL
STATE OF CALIFORNIA

George A. Oney, P.E.
Chemical Engineer
Registration No. CH004494

Tank Certification Report

Thin Film Evaporator Flush Tank

Prepared for: Romic Environmental Technologies Corp,
6760 West Allison Road
Chandler, AZ 85226

Prepared by: Metro Environmental Services, Inc.
1256-B West Brooks Street
Ontario, CA 91762

INTRODUCTION

On January 26, 2005 in accordance with Title 22 CCR Section 66264.192, "Design and Installation of New Tank Systems and Components", Metro Environmental Services, Inc. performed an assessment of the Thin Film Evaporator Flush Tank, a 225-gallon hazardous waste processing tank at the Romic Environmental Technologies Corp facility located at 6760 West Allison Road in Chandler, Arizona. The tank and associated piping system serve to process hazardous waste.

ASSESSMENT ITEMS

Compatibility of Waste Material with Tank Materials of Construction

The waste material contained in this tank is organic hazardous waste. This material is compatible with the materials of construction of the tank and piping.

Tank / Piping System Details

The 225-gallon tank, (Flush Tank), is constructed of stainless steel. Please refer to the attached Tank Specification Sheet for tank details.

The piping system for this tank is constructed of stainless steel. All piping appears to have been installed using good engineering and mechanical practices and is supported adequately to prevent against physical damage and excessive stress due to settlement, vibration, expansion, or contraction.

Leak Detection and Spill Prevention Equipment / Instrumentation

The entire tank and piping system is aboveground and is easily accessible. Leak detection will be by visual inspection. Qualified personnel will inspect the entire tank and piping system at least once per day.

Tank Support System

The tank rests upon a support structure that rests directly upon the concrete slab floor. This tank system was installed under the supervision of site personnel.

Tank Secondary Containment System

The tank is located inside of a containment area that also contains a number of additional hazardous waste storage and processing tanks. Containment has been certified separately by others.

Tank and Piping System Installation Inspection

The tank and piping was inspected for the following installation defects: weld breaks; punctures; cracks; corrosion; damaged fittings; and other structural damage or inadequate construction or installation. No discrepancies were noted.

System Tightness Testing

The system was tested for tightness by filling with product prior to the final inspection. No leakage or signs of previous leakage were evident during the final inspection.

Estimated Remaining Service Life

The tank was installed in 1991. Considering the current age of the system, materials of construction, intended use, and quality of construction, the remaining service life is estimated to be greater than five years. A re-inspection should be performed five years from the date of this inspection.

CERTIFICATION

I hereby certify that the installed tanks and components of the piping system referenced in this report have been properly inspected and are capable of handling the material referenced in this report without the likelihood of release.

I certify under penalty of law that this document was prepared under my direction and supervision in accordance with a system designed to assure that qualified personnel properly gather and evaluate the information submitted. Based on my inquiry of the person or persons who manage the system, or those persons directly responsible for gathering the information, the information submitted is, to the best of my knowledge and belief, true, accurate, and complete. I am aware that there are significant penalties for submitting false information, including the possibility of fine and imprisonment for knowing violations.

REGISTERED PROFESSIONAL ENGINEER
GEORGE ONEY
exp 6/30/05
No. CH004494
CHEMICAL
STATE OF CALIFORNIA

George A. Oney, P.E.
Chemical Engineer
Registration No. CH004494

Tank Certification Report

Thin Film Evaporator Receiver

Prepared for: Romic Environmental Technologies Corp,
6760 West Allison Road
Chandler, AZ 85226

Prepared by: Metro Environmental Services, Inc.
1256-B West Brooks Street
Ontario, CA 91762

INTRODUCTION

On January 26, 2005 in accordance with Title 22 CCR Section 66264.192, "Design and Installation of New Tank Systems and Components", Metro Environmental Services, Inc. performed an assessment of the Thin Film Evaporator Receiver Tank, a 225-gallon hazardous waste processing tank at the Romic Environmental Technologies Corp facility located at 6760 West Allison Road in Chandler, Arizona. The tank and associated piping system serve to process hazardous waste.

ASSESSMENT ITEMS

Compatibility of Waste Material with Tank Materials of Construction

The waste material contained in this tank is organic hazardous waste. This material is compatible with the materials of construction of the tank and piping.

Tank / Piping System Details

The 225-gallon tank, (Receiver Tank), is constructed of stainless steel. Please refer to the attached Tank Specification Sheet for tank details.

The piping system for this tank is constructed of stainless steel. All piping appears to have been installed using good engineering and mechanical practices and is supported adequately to prevent against physical damage and excessive stress due to settlement, vibration, expansion, or contraction.

Leak Detection and Spill Prevention Equipment / Instrumentation

The entire tank and piping system is aboveground and is easily accessible. Leak detection will be by visual inspection. Qualified personnel will inspect the entire tank and piping system at least once per day.

Tank Support System

The tank rests upon a support structure that rests directly upon the concrete slab floor. This tank system was installed under the supervision of site personnel.

Tank Secondary Containment System

The tank is located inside of a containment area that also contains a number of additional hazardous waste storage and processing tanks. Containment has been certified separately by others.

Tank and Piping System Installation Inspection

The tank and piping was inspected for the following installation defects: weld breaks; punctures; cracks; corrosion; damaged fittings; and other structural damage or inadequate construction or installation. No discrepancies were noted.

System Tightness Testing

The system was tested for tightness by filling with product prior to the final inspection. No leakage or signs of previous leakage were evident during the final inspection.

Estimated Remaining Service Life

The tank was installed in 1991. Considering the current age of the system, materials of construction, intended use, and quality of construction, the remaining service life is estimated to be greater than five years. A re-inspection should be performed five years from the date of this inspection.

CERTIFICATION

I hereby certify that the installed tanks and components of the piping system referenced in this report have been properly inspected and are capable of handling the material referenced in this report without the likelihood of release.

I certify under penalty of law that this document was prepared under my direction and supervision in accordance with a system designed to assure that qualified personnel properly gather and evaluate the information submitted. Based on my inquiry of the person or persons who manage the system, or those persons directly responsible for gathering the information, the information submitted is, to the best of my knowledge and belief, true, accurate, and complete. I am aware that there are significant penalties for submitting false information, including the possibility of fine and imprisonment for knowing violations.

REGISTERED PROFESSIONAL ENGINEER
GEORGE ONEY
exp 6/30/05
No. CH004494
CHEMICAL
STATE OF CALIFORNIA

George A. Oney, P.E.
Chemical Engineer
Registration No. CH004494

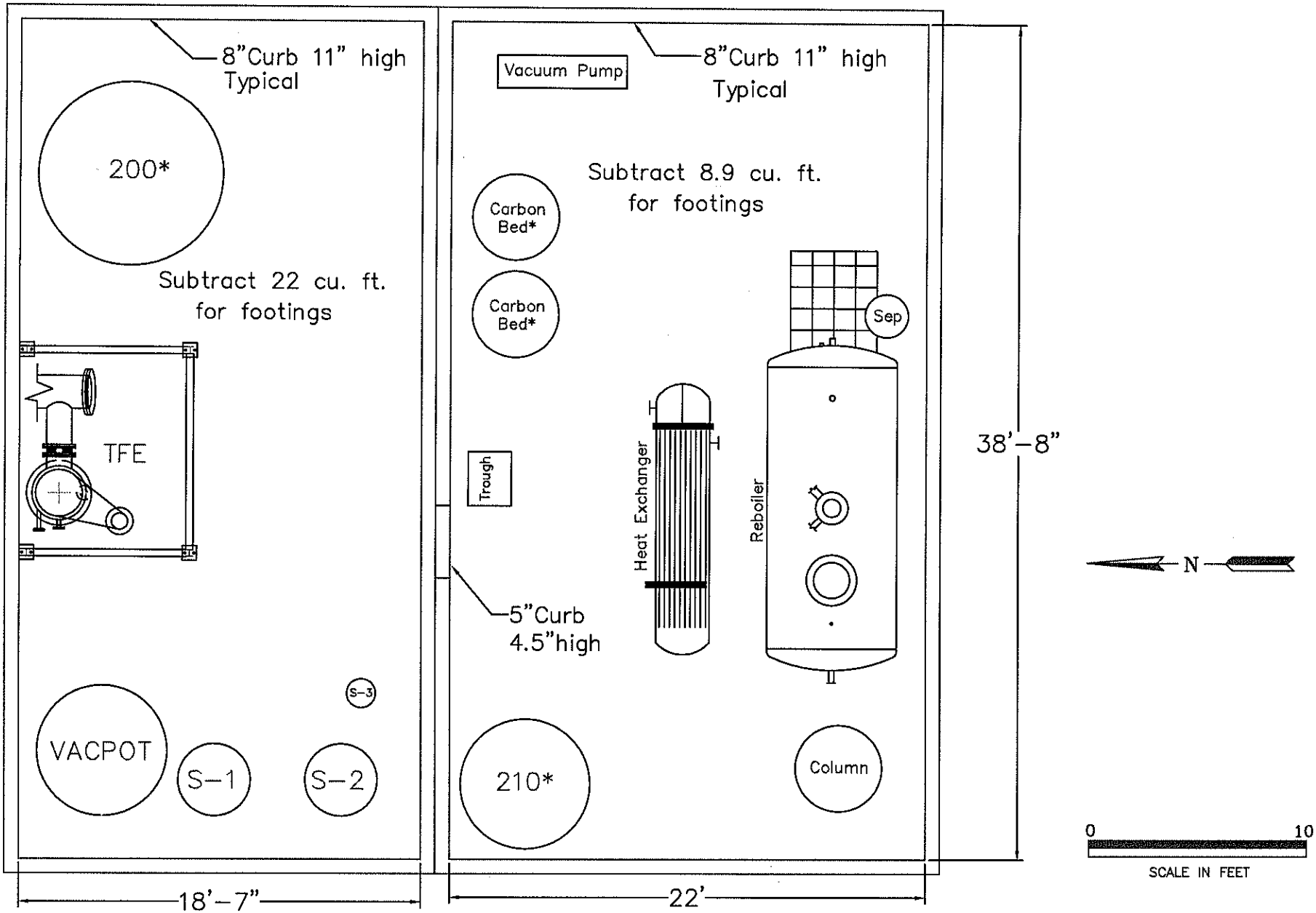

VACPOT-THINFILMER-COLUMN AREA

* Non-regulated tanks.

REV	DATE	REVISION	APP

ROMIC
ENVIRONMENTAL TECHNOLOGIES
ENGINEERING DEPARTMENT

ROMIC - SOUTHWEST
CHANDLER, ARIZONA
VACPOT THINFILMER
COLUMN AREA

DATE: 03-22-04
SCALE: NONE

E-2

Fig E-2 VpotTFCol_R2.dwg

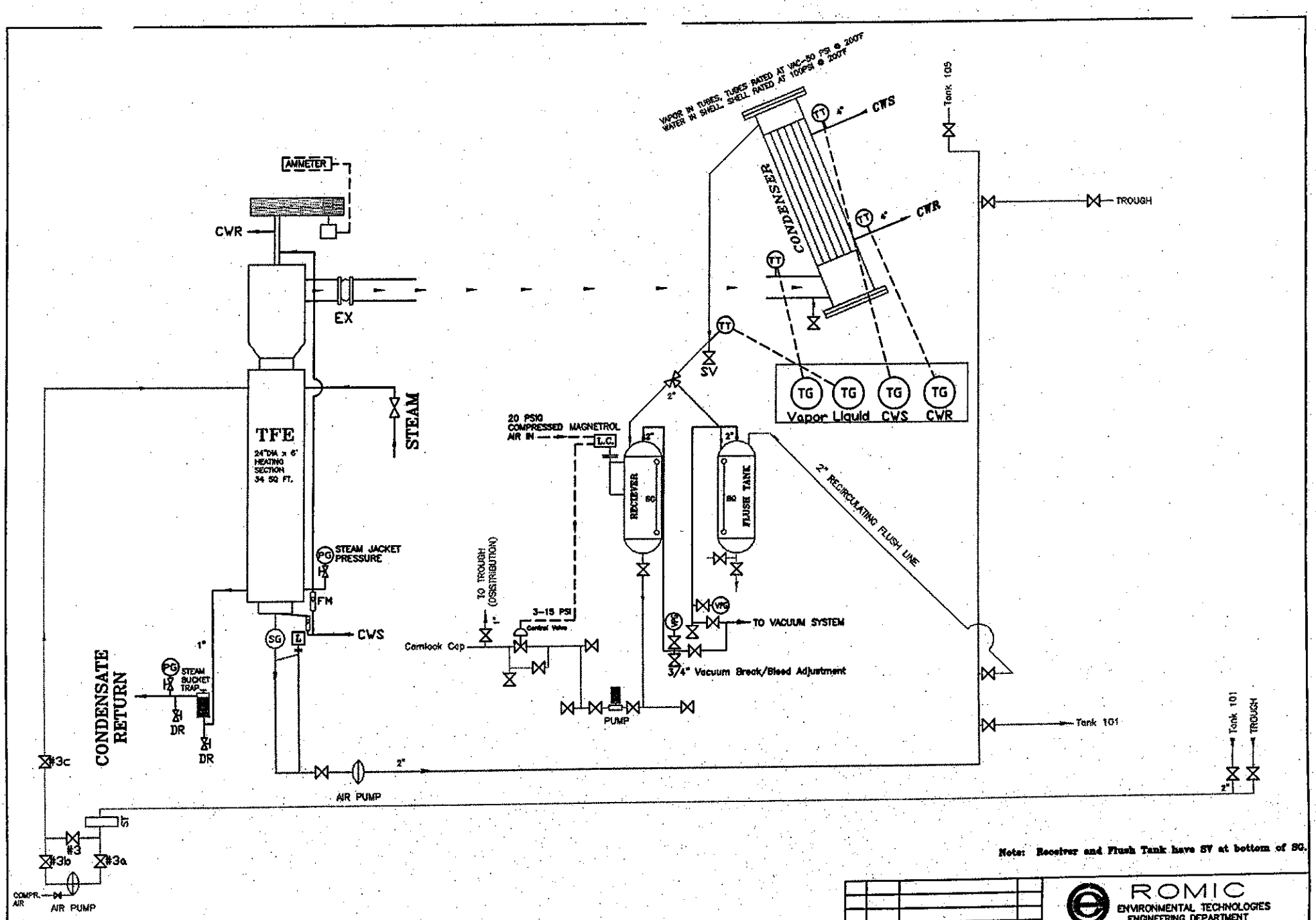

Note: Receiver and Flush Tank have SV at bottom of SG.

REV	DATE	REVISION	APP
1	5/04	General revisions	MT

ROMIC
ENVIRONMENTAL TECHNOLOGIES
ENGINEERING DEPARTMENT

ROMIC – SOUTHWEST
CHANDLER, ARIZONA

THIN FILM EVAPORATOR
PROCESS FLOW DIAGRAM

DATE: 07-14-03
SCALE: NONE

E-5

I:\RSW_partB_04_final\E-5 RswTF

Tank Certification Report

Vacuum Pot

Prepared for: Romic Environmental Technologies Corp,
6760 West Allison Road
Chandler, AZ 85226

Prepared by: Metro Environmental Services, Inc.
1256-B West Brooks Street
Ontario, CA 91762

INTRODUCTION

On January 26, 2005 in accordance with Title 22 CCR Section 66264.192, "Design and Installation of New Tank Systems and Components", Metro Environmental Services, Inc. performed an assessment of the Vacuum Pot, a 1,700-gallon hazardous waste processing tank at the Romic Environmental Technologies Corp facility located at 6760 West Allison Road in Chandler, Arizona. The tank and associated piping system serve to process hazardous waste.

ASSESSMENT ITEMS

Compatibility of Waste Material with Tank Materials of Construction

The waste material contained in this tank is organic hazardous waste. This material is compatible with the materials of construction of the tank and piping.

Tank / Piping System Details

The 1,700-gallon tank, (Vacuum Pot), is constructed of stainless steel. Please refer to the attached Tank Specification Sheet for tank details.

The piping system for this tank is constructed of stainless steel. All piping appears to have been installed using good engineering and mechanical practices and is supported adequately to prevent against physical damage and excessive stress due to settlement, vibration, expansion, or contraction.

Leak Detection and Spill Prevention Equipment / Instrumentation

The entire tank and piping system is aboveground and is easily accessible. Leak detection will be by visual inspection. Qualified personnel will inspect the entire tank and piping system at least once per day.

Tank Support System

The tank rests upon a support structure that rests directly upon the concrete slab floor. This tank system was installed under the supervision of site personnel.

Tank Secondary Containment System

The tank is located inside of a containment area that also contains a number of additional hazardous waste storage and processing tanks. Containment has been certified separately by others.

Tank and Piping System Installation Inspection

The tank and piping was inspected for the following installation defects: weld breaks; punctures; cracks; corrosion; damaged fittings; and other structural damage or inadequate construction or installation. No discrepancies were noted.

System Tightness Testing

The system was tested for tightness by filling with product prior to the final inspection. No leakage or signs of previous leakage were evident during the final inspection.

Estimated Remaining Service Life

The tank was installed in 1995. Considering the current age of the system, materials of construction, intended use, and quality of construction, the remaining service life is estimated to be greater than five years. A re-inspection should be performed five years from the date of this inspection.

CERTIFICATION

I hereby certify that the installed tanks and components of the piping system referenced in this report have been properly inspected and are capable of handling the material referenced in this report without the likelihood of release.

I certify under penalty of law that this document was prepared under my direction and supervision in accordance with a system designed to assure that qualified personnel properly gather and evaluate the information submitted. Based on my inquiry of the person or persons who manage the system, or those persons directly responsible for gathering the information, the information submitted is, to the best of my knowledge and belief, true, accurate, and complete. I am aware that there are significant penalties for submitting false information, including the possibility of fine and imprisonment for knowing violations.

REGISTERED PROFESSIONAL ENGINEER
GEORGE ONEY
exp 6/30/05
No. CH004494
CHEMICAL
STATE OF CALIFORNIA

George A. Oney, P.E.
Chemical Engineer
Registration No. CH004494

Tank Certification Report

S-1

Prepared for: Romic Environmental Technologies Corp,
6760 West Allison Road
Chandler, AZ 85226

Prepared by: Metro Environmental Services, Inc.
1256-B West Brooks Street
Ontario, CA 91762

INTRODUCTION

On January 26, 2005 in accordance with Title 22 CCR Section 66264.192, "Design and Installation of New Tank Systems and Components", Metro Environmental Services, Inc. performed an assessment of Tank S-1, a 600-gallon hazardous waste processing tank at the Romic Environmental Technologies Corp facility located at 6760 West Allison Road in Chandler, Arizona. The tank and associated piping system serve to process hazardous waste.

ASSESSMENT ITEMS

Compatibility of Waste Material with Tank Materials of Construction

The waste material contained in this tank is organic hazardous waste. This material is compatible with the materials of construction of the tank and piping.

Tank / Piping System Details

The 600-gallon tank, (S-1), is constructed of stainless steel. Please refer to the attached Tank Specification Sheet for tank details.

The piping system for this tank is constructed of stainless steel. All piping appears to have been installed using good engineering and mechanical practices and is supported adequately to prevent against physical damage and excessive stress due to settlement, vibration, expansion, or contraction.

Leak Detection and Spill Prevention Equipment / Instrumentation

The entire tank and piping system is aboveground and is easily accessible. Leak detection will be by visual inspection. Qualified personnel will inspect the entire tank and piping system at least once per day.

Tank Support System

The tank rests upon a support structure that rests directly upon the concrete slab floor. This tank system was installed under the supervision of site personnel.

Tank Secondary Containment System

The tank is located inside of a containment area that also contains a number of additional hazardous waste storage and processing tanks. Containment has been certified separately by others.

Tank and Piping System Installation Inspection

The tank and piping was inspected for the following installation defects: weld breaks; punctures; cracks; corrosion; damaged fittings; and other structural damage or inadequate construction or installation. No discrepancies were noted.

System Tightness Testing

The system was tested for tightness by filling with product prior to the final inspection. No leakage or signs of previous leakage were evident during the final inspection.

Estimated Remaining Service Life

The tank was installed in 1995. Considering the current age of the system, materials of construction, intended use, and quality of construction, the remaining service life is estimated to be greater than five years. A re-inspection should be performed five years from the date of this inspection.

CERTIFICATION

I hereby certify that the installed tanks and components of the piping system referenced in this report have been properly inspected and are capable of handling the material referenced in this report without the likelihood of release.

I certify under penalty of law that this document was prepared under my direction and supervision in accordance with a system designed to assure that qualified personnel properly gather and evaluate the information submitted. Based on my inquiry of the person or persons who manage the system, or those persons directly responsible for gathering the information, the information submitted is, to the best of my knowledge and belief, true, accurate, and complete. I am aware that there are significant penalties for submitting false information, including the possibility of fine and imprisonment for knowing violations.

REGISTERED PROFESSIONAL ENGINEER
GEORGE ONEY
exp 6/30/05
No. CH004494
CHEMICAL
STATE OF CALIFORNIA

George A. Oney, P.E.
Chemical Engineer
Registration No. CH004494

Tank Certification Report

S-2

Prepared for: Romic Environmental Technologies Corp,
6760 West Allison Road
Chandler, AZ 85226

Prepared by: Metro Environmental Services, Inc.
1256-B West Brooks Street
Ontario, CA 91762

INTRODUCTION

On January 26, 2005 in accordance with Title 22 CCR Section 66264.192, "Design and Installation of New Tank Systems and Components", Metro Environmental Services, Inc. performed an assessment of Tank S-2, a 600-gallon hazardous waste processing tank at the Romic Environmental Technologies Corp facility located at 6760 West Allison Road in Chandler, Arizona. The tank and associated piping system serve to process hazardous waste.

ASSESSMENT ITEMS

Compatibility of Waste Material with Tank Materials of Construction

The waste material contained in this tank is organic hazardous waste. This material is compatible with the materials of construction of the tank and piping.

Tank / Piping System Details

The 600-gallon tank, (S-2), is constructed of stainless steel. Please refer to the attached Tank Specification Sheet for tank details.

The piping system for this tank is constructed of stainless steel. All piping appears to have been installed using good engineering and mechanical practices and is supported adequately to prevent against physical damage and excessive stress due to settlement, vibration, expansion, or contraction.

Leak Detection and Spill Prevention Equipment / Instrumentation

The entire tank and piping system is aboveground and is easily accessible. Leak detection will be by visual inspection. Qualified personnel will inspect the entire tank and piping system at least once per day.

Tank Support System

The tank rests upon a support structure that rests directly upon the concrete slab floor. This tank system was installed under the supervision of site personnel.

Tank Secondary Containment System

The tank is located inside of a containment area that also contains a number of additional hazardous waste storage and processing tanks. Containment has been certified separately by others.

Tank and Piping System Installation Inspection

The tank and piping was inspected for the following installation defects: weld breaks; punctures; cracks; corrosion; damaged fittings; and other structural damage or inadequate construction or installation. No discrepancies were noted.

System Tightness Testing

The system was tested for tightness by filling with product prior to the final inspection. No leakage or signs of previous leakage were evident during the final inspection.

Estimated Remaining Service Life

The tank was installed in 1995. Considering the current age of the system, materials of construction, intended use, and quality of construction, the remaining service life is estimated to be greater than five years. A re-inspection should be performed five years from the date of this inspection.

CERTIFICATION

I hereby certify that the installed tanks and components of the piping system referenced in this report have been properly inspected and are capable of handling the material referenced in this report without the likelihood of release.

I certify under penalty of law that this document was prepared under my direction and supervision in accordance with a system designed to assure that qualified personnel properly gather and evaluate the information submitted. Based on my inquiry of the person or persons who manage the system, or those persons directly responsible for gathering the information, the information submitted is, to the best of my knowledge and belief, true, accurate, and complete. I am aware that there are significant penalties for submitting false information, including the possibility of fine and imprisonment for knowing violations.

REGISTERED PROFESSIONAL ENGINEER
GEORGE ONEY
exp. 6/30/05
No. CH004494
CHEMICAL
STATE OF CALIFORNIA

George A. Oney, P.E.
Chemical Engineer
Registration No. CH004494

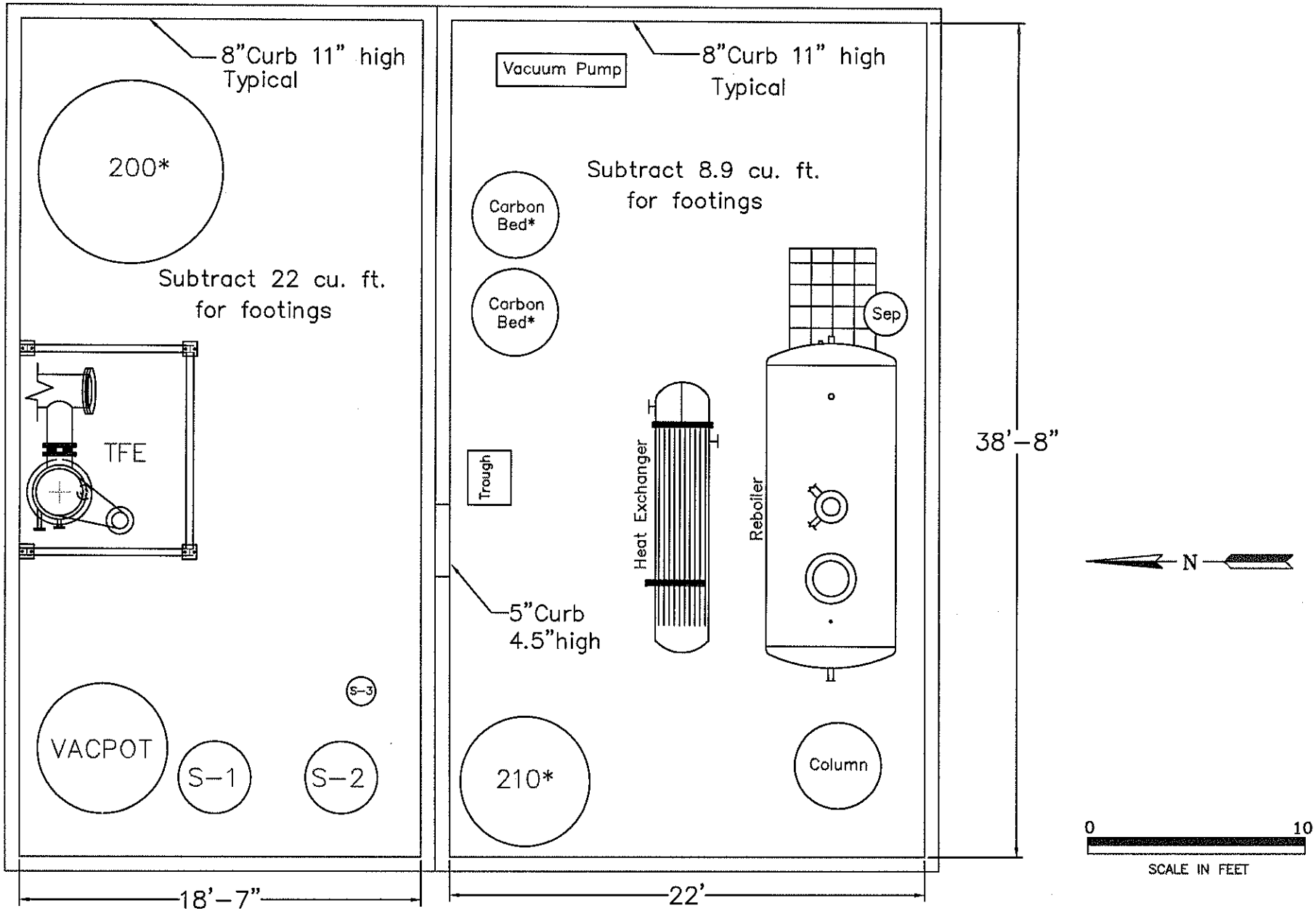

VACPOT-THINFILMER-COLUMN AREA

* Non-regulated tanks.

REV	DATE	REVISION	APP

ROMIC
ENVIRONMENTAL TECHNOLOGIES
ENGINEERING DEPARTMENT

ROMIC - SOUTHWEST
CHANDLER, ARIZONA
VACPOT THINFILMER
COLUMN AREA

DATE: 03-22-04
SCALE: NONE
E-2

Fig E-2 VpotTFCol_R2.dwg

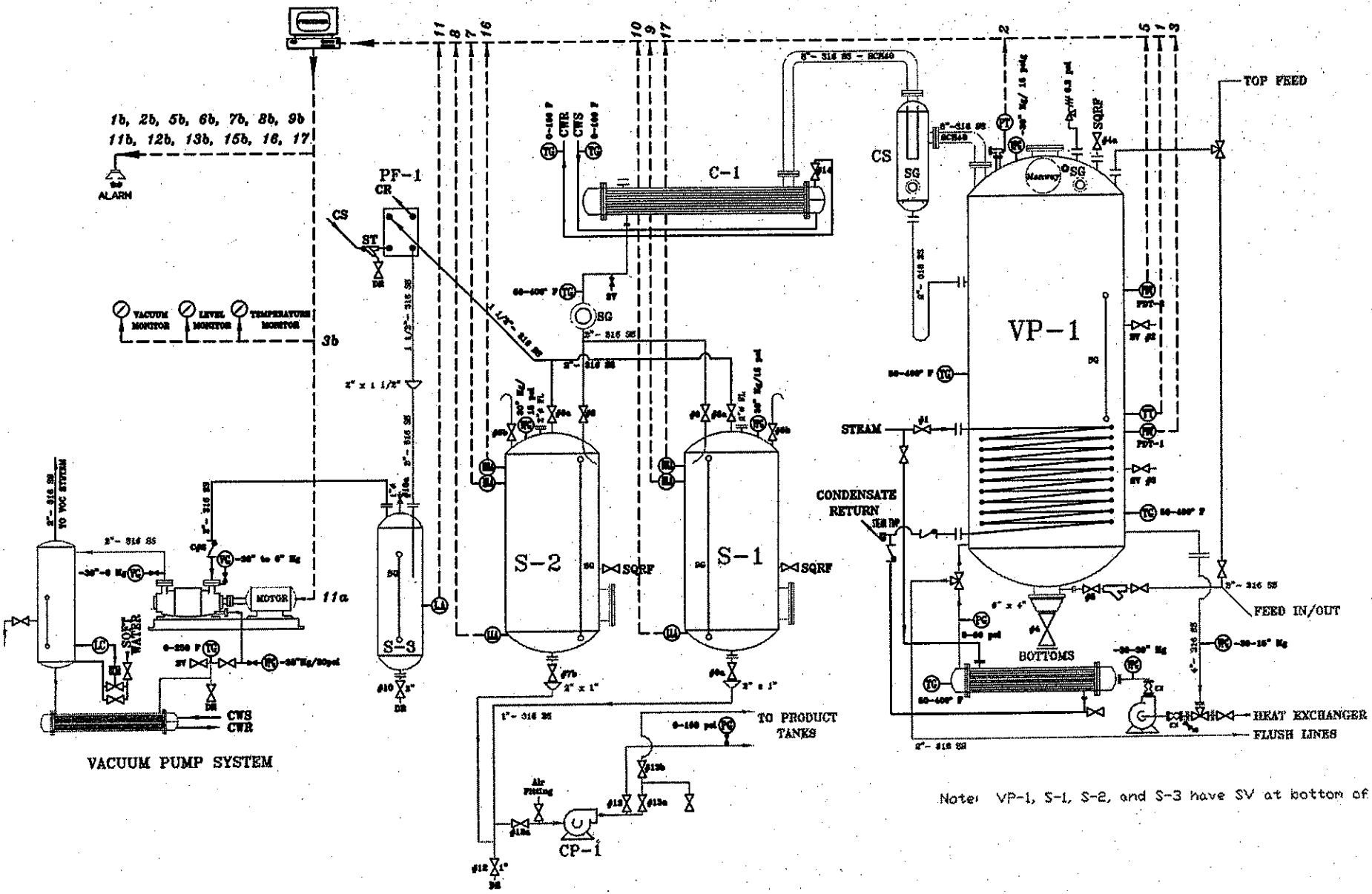

Note: VP-1, S-1, S-2, and S-3 have SV at bottom of SG.

REV	DATE	REVISION	APP
1	5/04	General revisions	MT

ROMIC
ENVIRONMENTAL TECHNOLOGIES
ENGINEERING DEPARTMENT

ROMIC – SOUTHWEST
CHANDLER, ARIZONA

VACUUM POT
PROCESS FLOW DIAGRAM

DATE: 11-04-02
SCALE: NONE

E-4

I:\RSW_partB_04_final\E-4 rewVP

Process Area Certification

Reboiler Area

Prepared for: Romic Environmental Technologies Corp,
6760 West Allison Road
Chandler, AZ 85226

Prepared by: Metro Environmental Services, Inc.
1256-B West Brooks Street
Ontario, CA 91762

INTRODUCTION

On May 27, 2005, Metro Environmental Services, Inc. performed an assessment of the Reboiler Area at the Romic Environmental Technologies Corp facility located at 6760 West Allison Road in Chandler, Arizona.

ASSESSMENT ITEMS

Containment Area Base

The Reboiler Area is constructed of concrete and coated with a chemical resistant coating. The area was visually inspected for cracks or gaps in the containment. No obvious defects were noted during the inspection.

CERTIFICATION

Based upon my professional expertise and judgement this containment system has been properly designed and installed to achieve the requirements of 40 CFR 264.193.

I certify under penalty of law that this document was prepared under my direction and supervision in accordance with a system designed to assure that qualified personnel properly gather and evaluate the information submitted. Based on my inquiry of the person or persons who manage the system, or those persons directly responsible for gathering the information, the information submitted is, to the best of my knowledge and belief, true, accurate, and complete. I am aware that there are significant penalties for submitting false information, including the possibility of fine and imprisonment for knowing violations.

REGISTERED PROFESSIONAL ENGINEER
GEORGE ONEY
exp 6/30/07
No. CH004494
CHEMICAL
STATE OF CALIFORNIA

George A. Oney, P.E.
Chemical Engineer
Registration No. CH004494

Tank Certification Report

Reboiler

Prepared for: Romic Environmental Technologies Corp,
6760 West Allison Road
Chandler, AZ 85226

Prepared by: Metro Environmental Services, Inc.
1256-B West Brooks Street
Ontario, CA 91762

INTRODUCTION

On January 26, 2005 in accordance with Title 22 CCR Section 66264.192, "Design and Installation of New Tank Systems and Components", Metro Environmental Services, Inc. performed an assessment of the Reboiler, a 2,990-gallon hazardous waste processing tank at the Romic Environmental Technologies Corp facility located at 6760 West Allison Road in Chandler, Arizona. The tank and associated piping system serve to process hazardous waste.

ASSESSMENT ITEMS

Compatibility of Waste Material with Tank Materials of Construction

The waste material contained in this tank is organic hazardous waste. This material is compatible with the materials of construction of the tank and piping.

Tank / Piping System Details

The 2,990-gallon tank, (Reboiler), is constructed of stainless steel. Please refer to the attached Tank Specification Sheet for tank details.

The piping system for this tank is constructed of stainless steel. All piping appears to have been installed using good engineering and mechanical practices and is supported adequately to prevent against physical damage and excessive stress due to settlement, vibration, expansion, or contraction.

Leak Detection and Spill Prevention Equipment / Instrumentation

The entire tank and piping system is aboveground and is easily accessible. Leak detection will be by visual inspection. Qualified personnel will inspect the entire tank and piping system at least once per day.

Tank Support System

The tank rests upon a support structure that rests directly upon the concrete slab floor. This tank system was installed under the supervision of site personnel.

Tank Secondary Containment System

The tank is located inside of a containment area that also contains a number of additional hazardous waste storage and processing tanks. Containment has been certified separately by others.

Tank and Piping System Installation Inspection

The tank and piping was inspected for the following installation defects: weld breaks; punctures; cracks; corrosion; damaged fittings; and other structural damage or inadequate construction or installation. No discrepancies were noted.

System Tightness Testing

The system was tested for tightness by filling with product prior to the final inspection. No leakage or signs of previous leakage were evident during the final inspection.

Estimated Remaining Service Life

The tank was installed in 2000. Considering the current age of the system, materials of construction, intended use, and quality of construction, the remaining service life is estimated to be greater than five years. A re-inspection should be performed five years from the date of this inspection.

CERTIFICATION

I hereby certify that the installed tanks and components of the piping system referenced in this report have been properly inspected and are capable of handling the material referenced in this report without the likelihood of release.

I certify under penalty of law that this document was prepared under my direction and supervision in accordance with a system designed to assure that qualified personnel properly gather and evaluate the information submitted. Based on my inquiry of the person or persons who manage the system, or those persons directly responsible for gathering the information, the information submitted is, to the best of my knowledge and belief, true, accurate, and complete. I am aware that there are significant penalties for submitting false information, including the possibility of fine and imprisonment for knowing violations.

REGISTERED PROFESSIONAL ENGINEER
GEORGE ONEY
exp 6/30/05
No. CH004494
CHEMICAL
STATE OF CALIFORNIA

George A. Oney, P.E.
Chemical Engineer
Registration No. CH004494

Tank Certification Report

Separator

Prepared for: Romic Environmental Technologies Corp,
6760 West Allison Road
Chandler, AZ 85226

Prepared by: Metro Environmental Services, Inc.
1256-B West Brooks Street
Ontario, CA 91762

INTRODUCTION

On January 26, 2005 in accordance with Title 22 CCR Section 66264.192, "Design and Installation of New Tank Systems and Components", Metro Environmental Services, Inc. performed an assessment of the Separator Tank, an 85-gallon hazardous waste processing tank at the Romic Environmental Technologies Corp facility located at 6760 West Allison Road in Chandler, Arizona. The tank and associated piping system serve to process hazardous waste.

ASSESSMENT ITEMS

Compatibility of Waste Material with Tank Materials of Construction

The waste material contained in this tank is organic hazardous waste. This material is compatible with the materials of construction of the tank and piping.

Tank / Piping System Details

The 85-gallon tank, (Separator Tank), is constructed of stainless steel. Please refer to the attached Tank Specification Sheet for tank details.

The piping system for this tank is constructed of stainless steel. All piping appears to have been installed using good engineering and mechanical practices and is supported adequately to prevent against physical damage and excessive stress due to settlement, vibration, expansion, or contraction.

Leak Detection and Spill Prevention Equipment / Instrumentation

The entire tank and piping system is aboveground and is easily accessible. Leak detection will be by visual inspection. Qualified personnel will inspect the entire tank and piping system at least once per day.

Tank Support System

The tank rests upon a support structure that rests directly upon the concrete slab floor. This tank system was installed under the supervision of site personnel.

Tank Secondary Containment System

The tank is located inside of a containment area that also contains a number of additional hazardous waste storage and processing tanks. Containment has been certified separately by others.

Tank and Piping System Installation Inspection

The tank and piping was inspected for the following installation defects: weld breaks; punctures; cracks; corrosion; damaged fittings; and other structural damage or inadequate construction or installation. No discrepancies were noted.

System Tightness Testing

The system was tested for tightness by filling with product prior to the final inspection. No leakage or signs of previous leakage were evident during the final inspection.

Estimated Remaining Service Life

The tank was installed in 2000. Considering the current age of the system, materials of construction, intended use, and quality of construction, the remaining service life is estimated to be greater than five years. A re-inspection should be performed five years from the date of this inspection.

CERTIFICATION

I hereby certify that the installed tanks and components of the piping system referenced in this report have been properly inspected and are capable of handling the material referenced in this report without the likelihood of release.

I certify under penalty of law that this document was prepared under my direction and supervision in accordance with a system designed to assure that qualified personnel properly gather and evaluate the information submitted. Based on my inquiry of the person or persons who manage the system, or those persons directly responsible for gathering the information, the information submitted is, to the best of my knowledge and belief, true, accurate, and complete. I am aware that there are significant penalties for submitting false information, including the possibility of fine and imprisonment for knowing violations.

REGISTERED PROFESSIONAL ENGINEER
GEORGE ONEY
exp 6/30/05
No. CH004494
CHEMICAL
STATE OF CALIFORNIA

George A. Oney, P.E.
Chemical Engineer
Registration No. CH004494

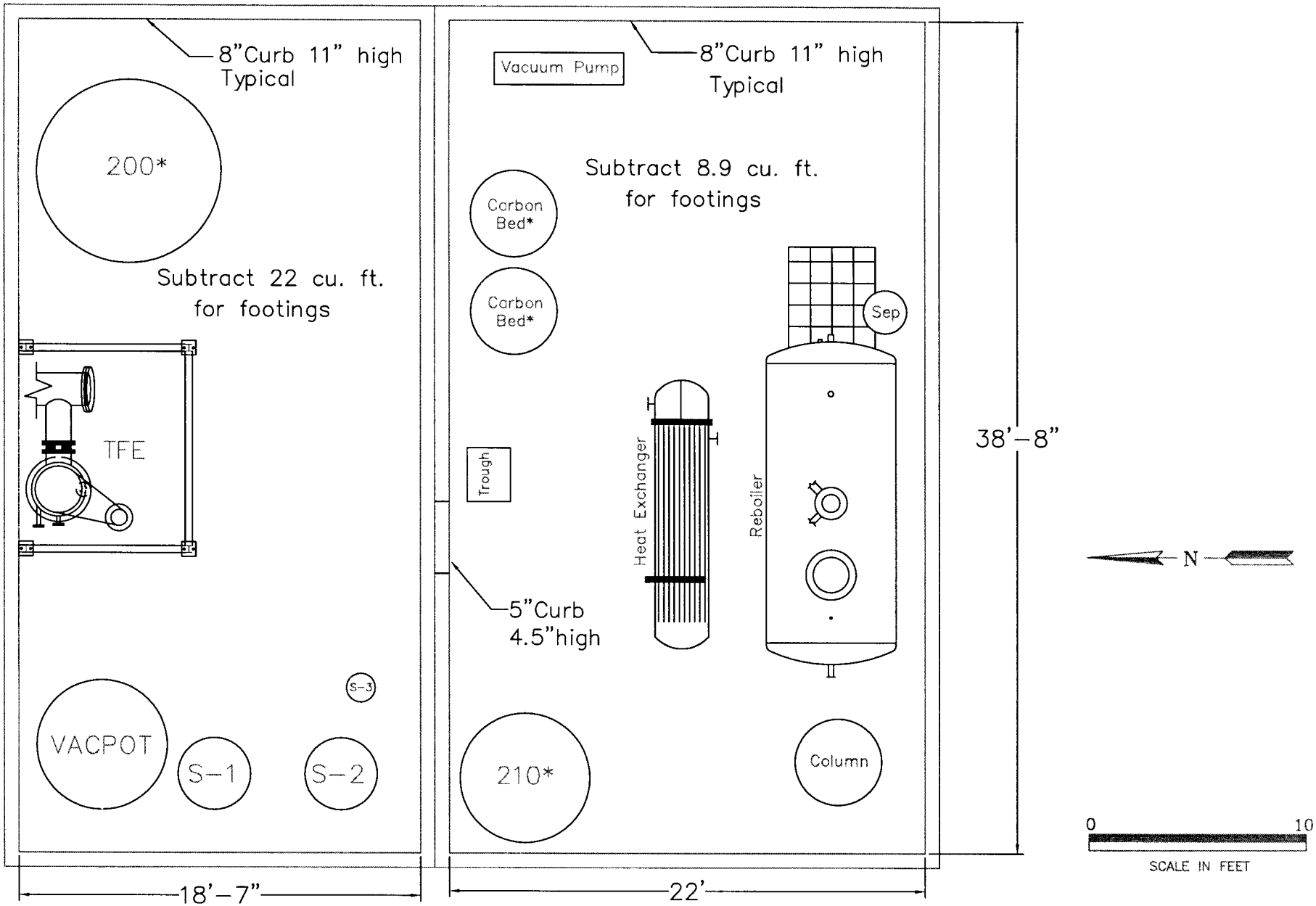

VACPOT–THINFILMER–COLUMN AREA

* Non-regulated tanks.

REV	DATE	REVISION	APP

ROMIC
ENVIRONMENTAL TECHNOLOGIES
ENGINEERING DEPARTMENT

ROMIC – SOUTHWEST
CHANDLER, ARIZONA
VACPOT THINFILMER
COLUMN AREA

DATE: 03-22-04
SCALE: NONE
E-2

Fig E-2 VpotTFCol_R2.dwg

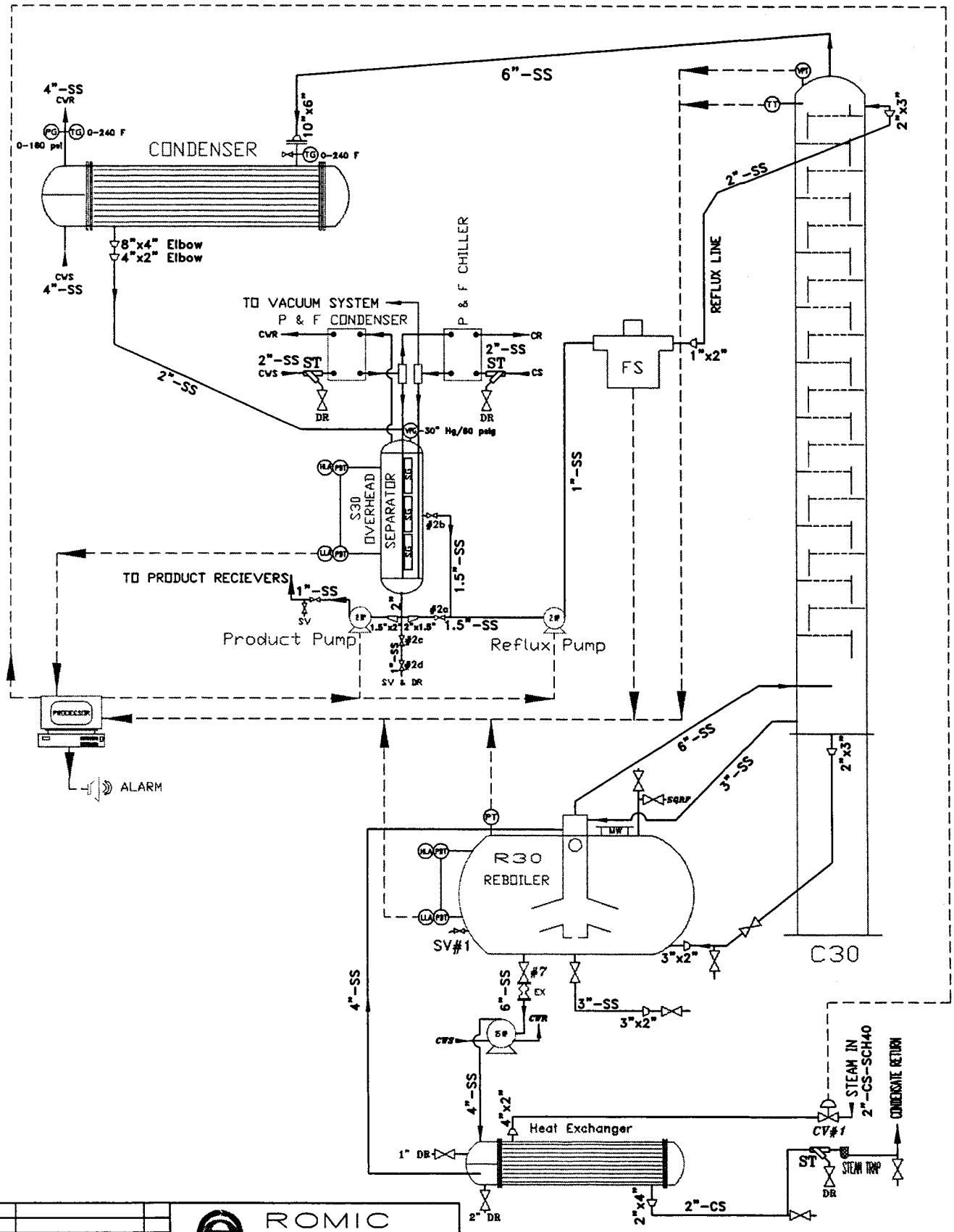

REV	DATE	REVISION	APP
1	5/04	General revisions	MT

ROMIC
ENVIRONMENTAL TECHNOLOGIES
ENGINEERING DEPARTMENT

ROMIC – SOUTHWEST
CHANDLER, ARIZONA

COLUMN 30
PROCESS FLOW DIAGRAM

DATE: 11-14-02
SCALE: NONE

E-3

I:\RSW_partB_04_final\E-3 Col30

Tank Farm Certification

Tankfarm A

Prepared for: Romic Environmental Technologies Corp,
6760 West Allison Road
Chandler, AZ 85226

Prepared by: Metro Environmental Services, Inc.
1256-B West Brooks Street
Ontario, CA 91762

INTRODUCTION

On February 2, 2005, Metro Environmental Services, Inc. performed an assessment of Tank Farm "A" at the Romic Environmental Technologies Corp facility located at 6760 West Allison Road in Chandler, Arizona.

ASSESSMENT ITEMS

Containment Area Base

Tank Farm "A" is constructed of 10-inch thick, minimum 3,000-psi concrete with two mats of #5 rebar placed at 12" spacing on center each way. A polyethylene liner was installed under the tank farm during construction. The slab is monolithic, thus there are no cold joints in the slab.

CERTIFICATION

Based upon my professional expertise and judgement this containment system has been properly designed and installed to achieve the requirements of 40 CFR 264.193.

I certify under penalty of law that this document was prepared under my direction and supervision in accordance with a system designed to assure that qualified personnel properly gather and evaluate the information submitted. Based on my inquiry of the person or persons who manage the system, or those persons directly responsible for gathering the information, the information submitted is, to the best of my knowledge and belief, true, accurate, and complete. I am aware that there are significant penalties for submitting false information, including the possibility of fine and imprisonment for knowing violations.

REGISTERED PROFESSIONAL ENGINEER
GEORGE ONEY
exp 6/30/05
No. CH004494
CHEMICAL
STATE OF CALIFORNIA

George A. Oney, P.E.
Chemical Engineer
Registration No. CH004494

Tank Farm Certification

Tankfarm B

Prepared for: Romic Environmental Technologies Corp,
6760 West Allison Road
Chandler, AZ 85226

Prepared by: Metro Environmental Services, Inc.
1256-B West Brooks Street
Ontario, CA 91762

INTRODUCTION

On February 2, 2005, Metro Environmental Services, Inc. performed an assessment of Tank Farm "B" at the Romic Environmental Technologies Corp facility located at 6760 West Allison Road in Chandler, Arizona.

ASSESSMENT ITEMS

Containment Area Base

Tank Farm "B" is constructed of 10-inch thick, minimum 3,000-psi concrete with two mats of #5 rebar placed at 12" spacing on center each way. A polyethylene liner was installed under the tank farm during construction. The slab is monolithic, thus there are no cold joints in the slab.

CERTIFICATION

Based upon my professional expertise and judgement this containment system has been properly designed and installed to achieve the requirements of 40 CFR 264.193.

I certify under penalty of law that this document was prepared under my direction and supervision in accordance with a system designed to assure that qualified personnel properly gather and evaluate the information submitted. Based on my inquiry of the person or persons who manage the system, or those persons directly responsible for gathering the information, the information submitted is, to the best of my knowledge and belief, true, accurate, and complete. I am aware that there are significant penalties for submitting false information, including the possibility of fine and imprisonment for knowing violations.

REGISTERED PROFESSIONAL ENGINEER
GEORGE ONEY
exp 6/30/05
No. CH004494
CHEMICAL
STATE OF CALIFORNIA

George A. Oney, P.E.
Chemical Engineer
Registration No. CH004494

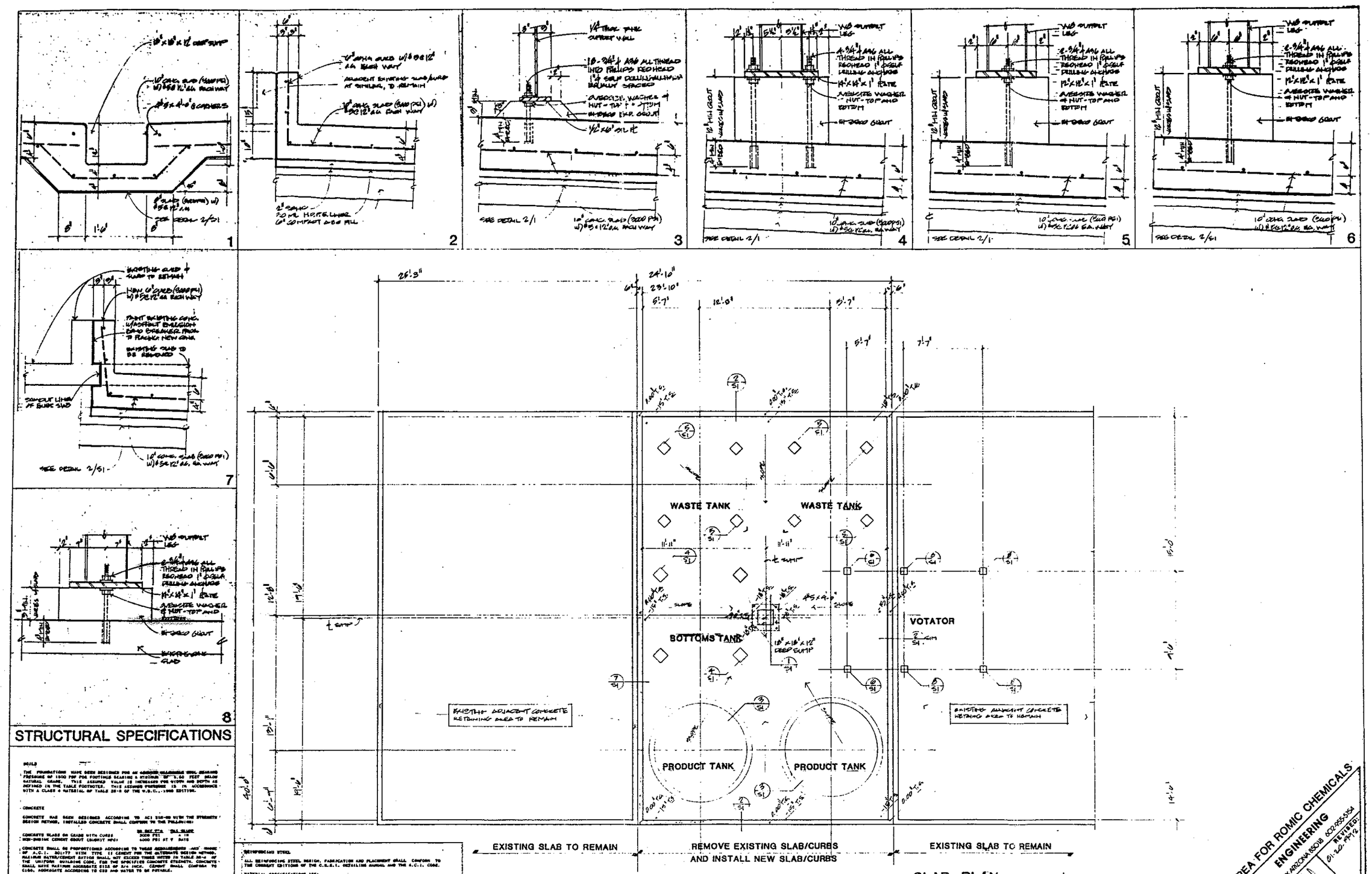

SLAB PLAN 1/4" = 1'-0"

STRUCTURAL SPECIFICATIONS

BOILD

THE FOUNDATIONS HAVE BEEN DESIGNED FOR AN ASSUMED ALLOWABLE SOIL BEARING PRESSURE OF 1500 PSF FOR FOOTINGS BEARING A MINIMUM OF 1.50 FEET BELOW NATURAL GRADE. THIS ASSUMED VALUE IS INCREASED FOR WIDTH AND DEPTH AS DEFINED IN THE TABLE FOOTNOTES. THIS ASSUMED PRESSURE IS IN ACCORDANCE WITH A CLASS 4 MATERIAL OF TABLE 23-8 OF THE U.B.C., 1988 EDITION.

CONCRETE

CONCRETE HAS BEEN DESIGNED ACCORDING TO ACI 318-89 WITH THE STRENGTH DESIGN METHOD. INSTALLED CONCRETE SHALL CONFORM TO THE FOLLOWING:

	28 DAY F'C	FILL SLOPE
CONCRETE SLABS ON GRADE WITH CURBS	3000 PSI	4 IN
NON-SHRINK CEMENT GROUT (SUBMIT MFG)	4000 PSI AT 7 DAYS	

CONCRETE SHALL BE PROPORTIONED ACCORDING TO THESE REQUIREMENTS AND MADE OF A.C.I. 301-77 WITH TYPE II CEMENT FOR THE ALTERNATE DESIGN METHOD. MAXIMUM WATER/CEMENT RATIOS SHALL NOT EXCEED THREE WATER IN TABLE 28-4 OF THE UNIFORM BUILDING CODE. FOR THE SPECIFIED CONCRETE STRENGTH, CONCRETE SHALL HAVE MAXIMUM AGGREGATE SIZE OF 3/4 INCH. CEMENT SHALL CONFORM TO C150. AGGREGATE ACCORDING TO C33 AND WATER TO BE POTABLE.

ALL CONCRETE SHALL BE MECHANICALLY VIBRATED IN PLACE BY EXPERIENCED WORKMEN IN ORDER TO CONSOLIDATE THE IN-PLACE CONCRETE, BUT NOT TO SEGREGATE INGREDIENTS.

NO ADMIXTURES SHALL BE USED WITHOUT SPECIFIC PRIOR WRITTEN APPROVAL FROM THE ARCHITECT/STRUCTURAL ENGINEER. ADMIXTURES USING ANY FORM OF CHLORIDES SHALL NOT BE USED.

CONCRETE SHALL BE CURED IN PLACE BY ENCLOSURE WITH POLYETHYLENE FILM OR APPROVED EMULSION SPRAY FILM FOR AT LEAST 10 DAYS AFTER PLACING. ALL SURFACES OF THE CONCRETE SHALL BE PROTECTED FROM DAMAGE.

TESTING OF CONCRETE SHALL CONSIST OF ONE TEST (2 SPECIMEN), ACCORDING TO ASTM C31, FOR EACH 50 CUBIC YARDS OF CONCRETE PLACED OF PORTION THEREOF, FOR EACH DAY'S PLACEMENT. AN INDEPENDENT TESTING LAB SHALL PERFORM ALL TESTING WHICH SHALL BE PAID FOR BY THE CONTRACTOR.

REINFORCING STEEL

ALL REINFORCING STEEL DESIGN, FABRICATION AND PLACEMENT SHALL CONFORM TO THE CURRENT EDITIONS OF THE C.R.S.I. DETAILING MANUAL AND THE A.C.I. CODE.

MATERIAL SPECIFICATIONS ARE:

REINFORCING STEEL: A615-60 Fy = 60 KSI #6 #4 AND SMALLER BARS.
A615-60 Fy = 60 KSI FOR #5 AND LARGER BARS.
WIRE FABRIC: A185 Fy = 60 KSI.

MINIMUM CONCRETE COVERAGE OF ALL REINFORCING STEEL SHALL BE:

UNFORMED CONCRETE AGAINST EARTH: 3 INCHES.
FORMED CONCRETE AGAINST BACKFILL EARTH: 2 INCHES.

LAP SPLICES IN CONCRETE SHALL BE 30 BAR DIAMETERS. REINFORCING SHALL BE SPLICED ONLY AS APPROVED. REINFORCING METER AS TO SIZE AND SPACING SHALL BE INSTALLED AS CONTINUOUS UNLESS OTHERWISE DETAILED.
MATCHING REINFORCEMENT BARS SHALL BE INSTALLED IN ALL CORNERS, BARGE AND WALL INTERSECTION IN ALL MASONRY AND CONCRETE.
ALL REINFORCING SHALL BE SECURELY TIED IN PLACE TO PREVENT MOVEMENT DURING CONCRETE PLACEMENT.
WELDING OF REINFORCING STEEL SHALL CONFORM TO CURRENT A.C.I., C.R.S.I. AND A.W.S. STANDARDS, WITH PRIOR APPROVAL.

CONTAINMENT AREA FOR ROMIC CHEMICALS
WOOLDRIDGE ENGINEERING
4330 EAST INDIAN SCHOOL PHOENIX ARIZONA 85018 602-955-5154
DATE: 03-08-91
REVISED: 01-20-1992
SHEET OF
S1 1

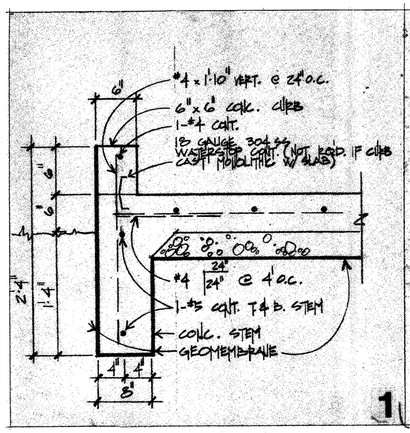

1

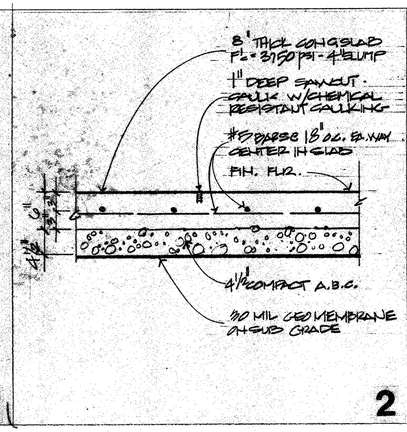

2

3

4

5

6

SLAB ON GRADE SHALL BE 8" INCHES THICK, NET, F'c = 3750 PSI, WITH #5 REINFORCING BARS AT 18" O.C., EACH WAY, CENTERED IN THE SLAB. THIS SLAB SHALL BE PLACED UNDER STRICT SUPERVISION AND INSPECTION. SLUMP TESTS AND CYLINDER TESTS SHALL BE TAKEN FROM EACH DELIVERY TRUCK. NO WATER SHALL BE ADDED IN THE FIELD. A PLASTICIZING AGENT SHALL BE USED TO FACILITATE PLACEMENT OF THE CONCRETE, ACCORDING TO THE MANUFACTURER,S RECOMMENDATIONS. THE SLAB SHALL BE VIBRATED IN PLACE BY EXPERIENCED WORKMEN.

OVER:

4.5 INCHES OF COMPACTED A.B.C. FILL.

OVER:

A GEOMEMBRANE OF ONE LAYER OF 30 MIL POLY-FLEX POLYEHTYLENE MEMBRANE BY POLY-AMERICA,INC. (1-888-527-3322). THIS MEMBRANE IS TO BE A ONE PIECE MATERIAL AND UNPIERCED AT THE FINISH OF CONSTRUCTION. THIS GEOMEMBRANE MUST BE INSTALLED WITH GREAT CARE SUCH THAT IT WILL EXIST AS A MOISTURE BARRIER AND MEMBRANE. NO GRADE STAKES, SCREEDS, BRACES OR ANY OTHER FORM OF CONSTRUCTION IS ALLOWED WHICH MAY CAUSE A PUNCTURE.

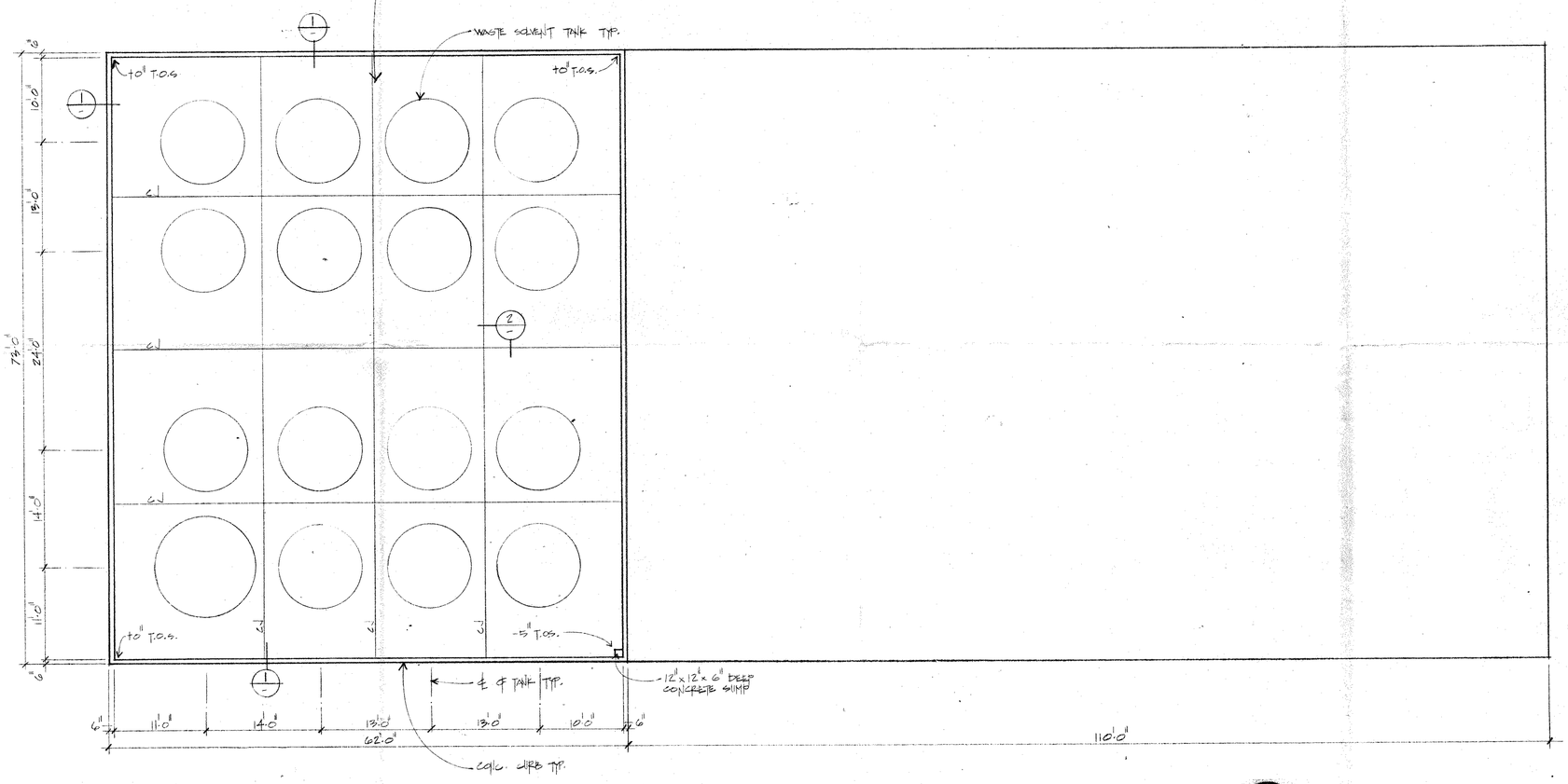

NORTH

PLAN 1/8" = 1'-0"

WASTE SOLVENT TANK FARM

FOR

ROMIC CHEMICAL CORPORATION

SOUTHWEST

WOOLDRIDGE ENTERPRISES Structural Engineers
4330 E. Indian School Road 602-955-5154
Phoenix Arizona 85018

C-101

Tank Farm Certification

Tankfarm C

Prepared for: Romic Environmental Technologies Corp,
6760 West Allison Road
Chandler, AZ 85226

Prepared by: Metro Environmental Services, Inc.
1256-B West Brooks Street
Ontario, CA 91762

INTRODUCTION

On February 2, 2005, Metro Environmental Services, Inc. performed an assessment of Tank Farm "C" at the Romic Environmental Technologies Corp facility located at 6760 West Allison Road in Chandler, Arizona.

ASSESSMENT ITEMS

Containment Area Base

Tank Farm "C" is constructed of 10-inch thick, minimum 3,000-psi concrete with two mats of #5 rebar placed at 12" spacing on center each way. A polyethylene liner was installed under the tank farm during construction. The slab is monolithic, thus there are no cold joints in the slab.

CERTIFICATION

Based upon my professional expertise and judgement this containment system has been properly designed and installed to achieve the requirements of 40 CFR 264.193.

I certify under penalty of law that this document was prepared under my direction and supervision in accordance with a system designed to assure that qualified personnel properly gather and evaluate the information submitted. Based on my inquiry of the person or persons who manage the system, or those persons directly responsible for gathering the information, the information submitted is, to the best of my knowledge and belief, true, accurate, and complete. I am aware that there are significant penalties for submitting false information, including the possibility of fine and imprisonment for knowing violations.

REGISTERED PROFESSIONAL ENGINEER
GEORGE ONEY
exp 6/30/05
No. CH004494
CHEMICAL
STATE OF CALIFORNIA

George A. Oney, P.E.
Chemical Engineer
Registration No. CH004494

Tank Farm Certification

Tankfarm D

Prepared for: Romic Environmental Technologies Corp,
6760 West Allison Road
Chandler, AZ 85226

Prepared by: Metro Environmental Services, Inc.
1256-B West Brooks Street
Ontario, CA 91762

INTRODUCTION

On February 2, 2005, Metro Environmental Services, Inc. performed an assessment of Tank Farm "D" at the Romic Environmental Technologies Corp facility located at 6760 West Allison Road in Chandler, Arizona.

ASSESSMENT ITEMS

Containment Area Base

Tank Farm "D" is constructed of 10-inch thick, minimum 3,000-psi concrete with two mats of #5 rebar placed at 12" spacing on center each way. A polyethylene liner was installed under the tank farm during construction. The slab is monolithic, thus there are no cold joints in the slab.

CERTIFICATION

Based upon my professional expertise and judgement this containment system has been properly designed and installed to achieve the requirements of 40 CFR 264.193.

I certify under penalty of law that this document was prepared under my direction and supervision in accordance with a system designed to assure that qualified personnel properly gather and evaluate the information submitted. Based on my inquiry of the person or persons who manage the system, or those persons directly responsible for gathering the information, the information submitted is, to the best of my knowledge and belief, true, accurate, and complete. I am aware that there are significant penalties for submitting false information, including the possibility of fine and imprisonment for knowing violations.

REGISTERED PROFESSIONAL ENGINEER
GEORGE ONEY
exp 6/30/05
No. CH004494
CHEMICAL
STATE OF CALIFORNIA

George A. Oney, P.E.
Chemical Engineer
Registration No. CH004494

Liner being unrolled under tank farm

Liner seal being tested for leaks

Sump area for liner being installed

Final preparations on liner prior to covering

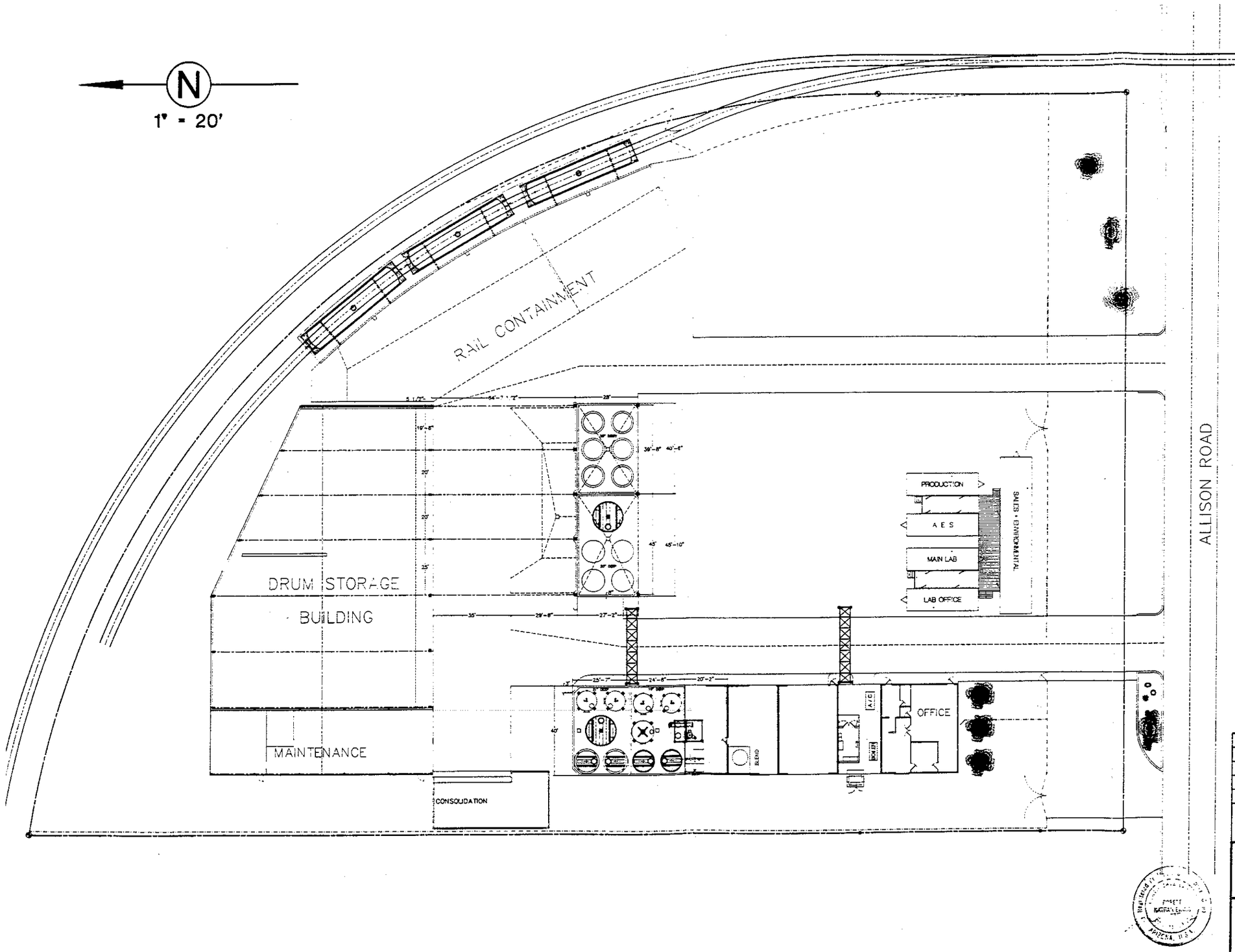

New curb and gutter to match existing per Lone Butte Industrial Park Standards

New drives to be 6" thick 3000 psi Fibermesh concrete, with #4 rebar @ 16" OC, both ways, over 6"min compacted AB.

New containment areas to be 3000psi Fibermesh concrete over 6"min compacted AB as follows:
Floors: 10" thick with #5 rebar @ 12" OC, both ways;
Walls: 8" thick with #5 rebar @ 12" OC, both ways.

REV	DATE	REVISION	BY	CHK	APP
0	11-15-91	To G.R.I.C. for Permit	RAP		

This drawing, including the information it contains, is the property of ROMIC CHEMICAL CORP. This drawing is to be used only in connection with the project to which it pertains, and may not be used in any manner detrimental to the interests of ROMIC CHEMICAL CORP. This drawing is not to be copied without permission, and must be returned upon request.

ROMIC
CHEMICAL CORPORATION
ENGINEERING DEPARTMENT

ROMIC CHEMICAL - SOUTHWEST
6760 W. ALLISON ROAD
CHANDLER, ARIZONA

PLOT PLAN
NEW TANK FARM AREAS

DATE: 15 NOV 91
SCALE: 1" = 20'
DRAWING NO. P103
SHEET 1 OF 1

PLOT103A.DWG 11-15-91

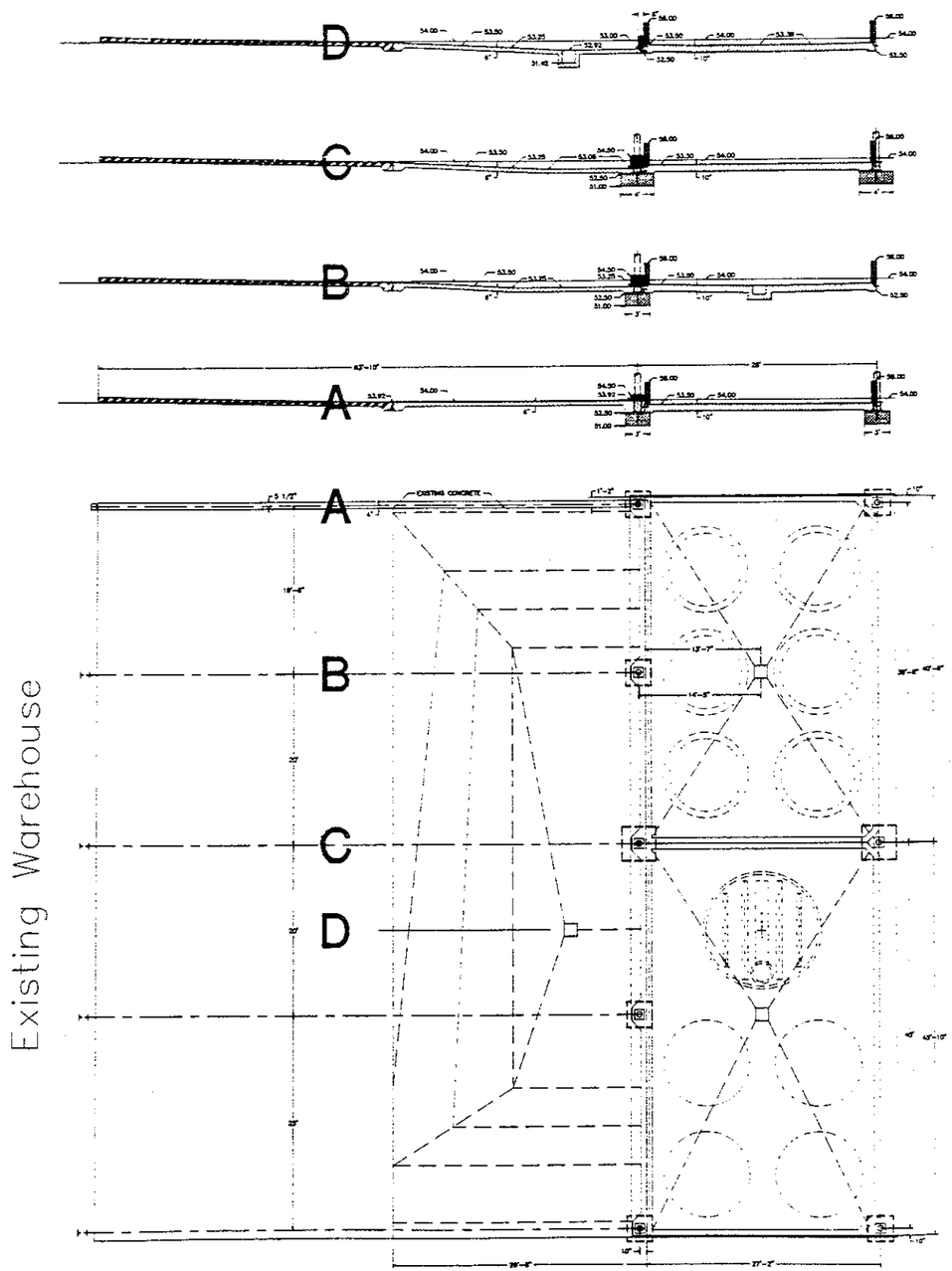

PLAN – 1/8" = 1'-0"

New curb and gutter to match existing per Lone Butte Industrial Park Standards

New drives to be 6" thick 3000 psi Fibermesh concrete, with #4 rebar @ 16" OC, both ways, over 6"min compacted AB.

New containment areas to be 3000psi Fibermesh concrete over 6"min compacted AB as follows:
Floors: 10" thick with #5 rebar @ 12" OC, both ways;
Walls: 8" thick with #5 rebar @ 12" OC, both ways.

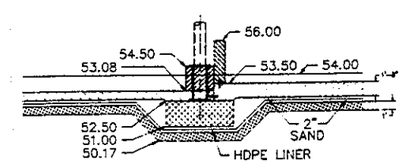

1/4" = 1'-0"

REV	DATE	REVISION	BY	CHK	APP
0	12-15-91	To G.R.I.C. for Permit	RAP		

This drawing, including the information it contains, is the property of ROMIC CHEMICAL CORP. This drawing is to be used only in connection with the project to which it pertains, and may not be used in any manner detrimental to the interests of ROMIC CHEMICAL CORP. This drawing is not to be copied without permission, and must be returned upon request.

ROMIC
CHEMICAL CORPORATION
ENGINEERING DEPARTMENT

ROMIC CHEMICAL - SOUTHWEST
6760 W. ALLISON ROAD
CHANDLER, ARIZONA

NEW TANK FARM AREAS
CENTER AREA LAYOUT

DATE: 15 DEC 91
SCALE: As Shown
DRAWING NO. P103
SHEET 2 OF 4

PLOT1038.DWG 12-15-91

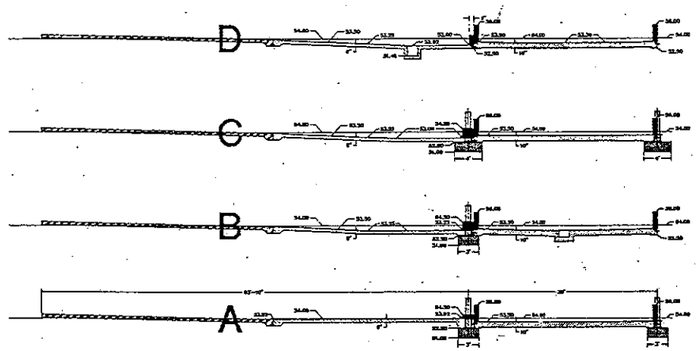

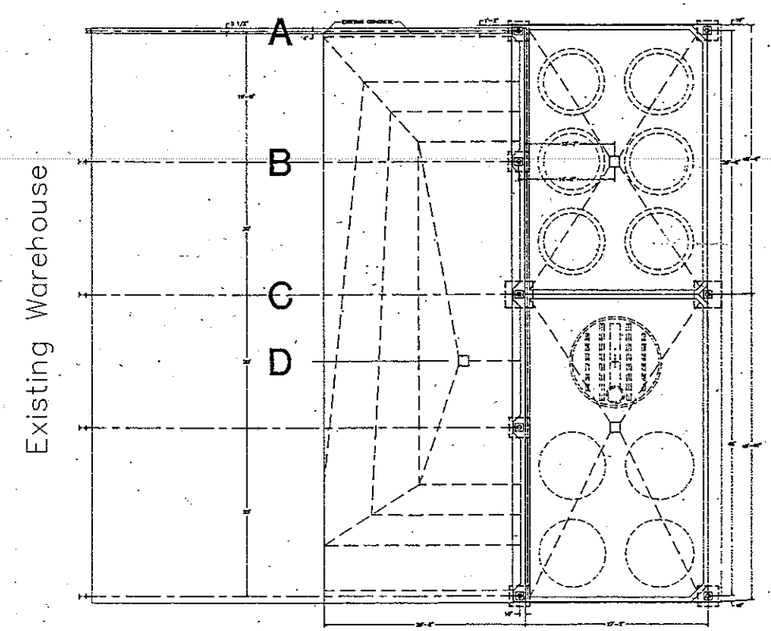

PLAN – 1/8" = 1'–0"

New curb and gutter to match existing per
Lone Butte Industrial Park Standards

New drives to be 6" thick 3000 psi Fibermesh concrete, with #4 rebar @ 16" OC, both ways, over 6"min compacted AB.

New containment areas to be 3000psi Fibermesh concrete over 6"min compacted AB as follows:
Floors: 10" thick with #5 rebar @ 12" OC, both ways;
Walls: 8" thick with #5 rebar @ 12" OC, both ways.

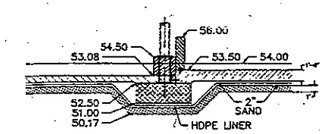

1/4" = 1'–0"

REV	DATE	REVISION	BY	CHK	APP
0	12-15-91	To G.R.I.C. for Permit	RAP		

This drawing, including the information it contains, is the property of ROMIC CHEMICAL CORP. This drawing is to be used only in connection with the project to which it pertains, and may not be used in any manner detrimental to the interests of ROMIC CHEMICAL CORP. This drawing is not to be copied without permission, and must be returned upon request.

ROMIC
CHEMICAL CORPORATION
ENGINEERING DEPARTMENT

ROMIC CHEMICAL - SOUTHWEST
6760 W. ALLISON ROAD
CHANDLER, ARIZONA

NEW TANK FARM AREAS
CENTER AREA LAYOUT

DATE: 15 DEC 91
SCALE: AS SHOWN
DRAWING NO. P103
SHEET 2 OF 4

P:\01038.DWG 12-15-91

Tank Farm Certification

Tankfarm E

Prepared for: Romic Environmental Technologies Corp,
6760 West Allison Road
Chandler, AZ 85226

Prepared by: Metro Environmental Services, Inc.
1256-B West Brooks Street
Ontario, CA 91762

INTRODUCTION

On February 2, 2005, Metro Environmental Services, Inc. performed an assessment of Tank Farm "E" at the Romic Environmental Technologies Corp facility located at 6760 West Allison Road in Chandler, Arizona.

ASSESSMENT ITEMS

Containment Area Base

Tank Farm "E" is constructed of 10-inch thick, minimum 3,000-psi concrete with two mats of #5 rebar placed at 12" spacing on center each way. A polyethylene liner was installed under the tank farm during construction. The slab is monolithic, thus there are no cold joints in the slab.

CERTIFICATION

Based upon my professional expertise and judgement this containment system has been properly designed and installed to achieve the requirements of 40 CFR 264.193.

I certify under penalty of law that this document was prepared under my direction and supervision in accordance with a system designed to assure that qualified personnel properly gather and evaluate the information submitted. Based on my inquiry of the person or persons who manage the system, or those persons directly responsible for gathering the information, the information submitted is, to the best of my knowledge and belief, true, accurate, and complete. I am aware that there are significant penalties for submitting false information, including the possibility of fine and imprisonment for knowing violations.

REGISTERED PROFESSIONAL ENGINEER
GEORGE ONEY
exp 6/30/05
No. CH004494
CHEMICAL
STATE OF CALIFORNIA

George A. Oney, P.E.
Chemical Engineer
Registration No. CH004494

Tank Farm Certification

Tankfarm F

Prepared for: Romic Environmental Technologies Corp,
6760 West Allison Road
Chandler, AZ 85226

Prepared by: Metro Environmental Services, Inc.
1256-B West Brooks Street
Ontario, CA 91762

INTRODUCTION

On February 2, 2005, Metro Environmental Services, Inc. performed an assessment of Tank Farm "F" at the Romic Environmental Technologies Corp facility located at 6760 West Allison Road in Chandler, Arizona.

ASSESSMENT ITEMS

Containment Area Base

Tank Farm "F" is constructed of 10-inch thick, minimum 3,000-psi concrete with two mats of #5 rebar placed at 12" spacing on center each way. A polyethylene liner was installed under the tank farm during construction. The slab is monolithic, thus there are no cold joints in the slab.

CERTIFICATION

Based upon my professional expertise and judgement this containment system has been properly designed and installed to achieve the requirements of 40 CFR 264.193.

I certify under penalty of law that this document was prepared under my direction and supervision in accordance with a system designed to assure that qualified personnel properly gather and evaluate the information submitted. Based on my inquiry of the person or persons who manage the system, or those persons directly responsible for gathering the information, the information submitted is, to the best of my knowledge and belief, true, accurate, and complete. I am aware that there are significant penalties for submitting false information, including the possibility of fine and imprisonment for knowing violations.

REGISTERED PROFESSIONAL ENGINEER
GEORGE ONEY
exp 6/30/05
No. CH004494
CHEMICAL
STATE OF CALIFORNIA

George A. Oney, P.E.
Chemical Engineer
Registration No. CH004494

Tank Farm Certification

Tankfarm G

Prepared for: Romic Environmental Technologies Corp,
6760 West Allison Road
Chandler, AZ 85226

Prepared by: Metro Environmental Services, Inc.
1256-B West Brooks Street
Ontario, CA 91762

INTRODUCTION

On February 2, 2005, Metro Environmental Services, Inc. performed an assessment of Tank Farm "G" at the Romic Environmental Technologies Corp facility located at 6760 West Allison Road in Chandler, Arizona.

ASSESSMENT ITEMS

Containment Area Base

Tank Farm "G" is constructed of 10-inch thick, minimum 3,000-psi concrete with two mats of #5 rebar placed at 12" spacing on center each way. A polyethylene liner was installed under the tank farm during construction. The slab is monolithic, thus there are no cold joints in the slab.

CERTIFICATION

Based upon my professional expertise and judgement this containment system has been properly designed and installed to achieve the requirements of 40 CFR 264.193.

I certify under penalty of law that this document was prepared under my direction and supervision in accordance with a system designed to assure that qualified personnel properly gather and evaluate the information submitted. Based on my inquiry of the person or persons who manage the system, or those persons directly responsible for gathering the information, the information submitted is, to the best of my knowledge and belief, true, accurate, and complete. I am aware that there are significant penalties for submitting false information, including the possibility of fine and imprisonment for knowing violations.

REGISTERED PROFESSIONAL ENGINEER
GEORGE ONEY
exp 6/30/05
No. CH004494
CHEMICAL
STATE OF CALIFORNIA

George A. Oney, P.E.
Chemical Engineer
Registration No. CH004494

Tank Certification Report

Tank T-101

Prepared for: Romic Environmental Technologies Corp,
6760 West Allison Road
Chandler, AZ 85226

Prepared by: Metro Environmental Services, Inc.
1256-B West Brooks Street
Ontario, CA 91762

INTRODUCTION

On February 2, 2005, in accordance with Title 22 CCR Section 66264.192, "Design and Installation of New Tank Systems and Components", Metro Environmental Services, Inc. performed an assessment of Tank #101, a 5,800-gallon hazardous waste storage tank at the Romic Environmental Technologies Corp facility located at 6760 West Allison Road in Chandler, Arizona. The tank and associated piping system serve to store hazardous waste.

ASSESSMENT ITEMS

Compatibility of Waste Material with Tank Materials of Construction

The waste material contained in this tank is organic and/or aqueous hazardous waste. This material is compatible with the materials of construction of the tank and piping.

Tank / Piping System Details

The 5,800-gallon tank, (Tank #101), is constructed of carbon steel. Please refer to the attached Tank Specification Sheet for tank details.

The piping system for this tank is constructed of carbon steel. All piping appears to have been installed using good engineering and mechanical practices and is supported adequately to prevent against physical damage and excessive stress due to settlement, vibration, expansion, or contraction.

Leak Detection and Spill Prevention Equipment / Instrumentation

The entire tank and piping system is aboveground and is easily accessible. Leak detection will be by visual inspection. Qualified personnel will inspect the entire tank and piping system at least once per day.

Tank Support System

The tank is supported by four steel legs that rest directly upon the concrete slab floor. This tank system was installed under the supervision of site personnel.

Tank Secondary Containment System

The tank is located in a containment area that also contains a number of additional hazardous waste storage and processing tanks. Containment has been certified separately by others.

Tank and Piping System Installation Inspection

The tank and piping was inspected for the following installation defects: weld breaks; punctures; cracks; corrosion; damaged fittings; and other structural damage or inadequate construction or installation. No discrepancies were noted.

System Tightness Testing

The system was tested for tightness by filling with product prior to the final inspection. No leakage or signs of previous leakage were evident during the final inspection.

Estimated Remaining Service Life

The tank was installed in 1991. Considering the current age of the system, materials of construction, intended use, and quality of construction, the remaining service life is estimated to be greater than five years. A re-inspection should be performed five years from the date of this inspection.

CERTIFICATION

I hereby certify that the installed tanks and components of the piping system referenced in this report have been properly inspected and are capable of handling the material referenced in this report without the likelihood of release.

I certify under penalty of law that this document was prepared under my direction and supervision in accordance with a system designed to assure that qualified personnel properly gather and evaluate the information submitted. Based on my inquiry of the person or persons who manage the system, or those persons directly responsible for gathering the information, the information submitted is, to the best of my knowledge and belief, true, accurate, and complete. I am aware that there are significant penalties for submitting false information, including the possibility of fine and imprisonment for knowing violations.

REGISTERED PROFESSIONAL ENGINEER
GEORGE ONEY
exp 6/30/05
No. CH004494
CHEMICAL
STATE OF CALIFORNIA

George A. Oney, P.E.
Chemical Engineer
Registration No. CH004494

Tank Certification Report

Tank T-102

Prepared for: Romic Environmental Technologies Corp,
6760 West Allison Road
Chandler, AZ 85226

Prepared by: Metro Environmental Services, Inc.
1256-B West Brooks Street
Ontario, CA 91762

INTRODUCTION

On February 2, 2005, in accordance with Title 22 CCR Section 66264.192, "Design and Installation of New Tank Systems and Components", Metro Environmental Services, Inc. performed an assessment of Tank #102, a 5,800-gallon hazardous waste storage tank at the Romic Environmental Technologies Corp facility located at 6760 West Allison Road in Chandler, Arizona. The tank and associated piping system serve to store hazardous waste.

ASSESSMENT ITEMS

Compatibility of Waste Material with Tank Materials of Construction

The waste material contained in this tank is organic and/or aqueous hazardous waste. This material is compatible with the materials of construction of the tank and piping.

Tank / Piping System Details

The 5,800-gallon tank, (Tank #102), is constructed of carbon steel. Please refer to the attached Tank Specification Sheet for tank details.

The piping system for this tank is constructed of carbon steel. All piping appears to have been installed using good engineering and mechanical practices and is supported adequately to prevent against physical damage and excessive stress due to settlement, vibration, expansion, or contraction.

Leak Detection and Spill Prevention Equipment / Instrumentation

The entire tank and piping system is aboveground and is easily accessible. Leak detection will be by visual inspection. Qualified personnel will inspect the entire tank and piping system at least once per day.

Tank Support System

The tank is supported by four steel legs that rest directly upon the concrete slab floor. This tank system was installed under the supervision of site personnel.

Tank Secondary Containment System

The tank is located in a containment area that also contains a number of additional hazardous waste storage and processing tanks. Containment has been certified separately by others.

Tank and Piping System Installation Inspection

The tank and piping was inspected for the following installation defects: weld breaks; punctures; cracks; corrosion; damaged fittings; and other structural damage or inadequate construction or installation. No discrepancies were noted.

System Tightness Testing

The system was tested for tightness by filling with product prior to the final inspection. No leakage or signs of previous leakage were evident during the final inspection.

Estimated Remaining Service Life

The tank was installed in 1991. Considering the current age of the system, materials of construction, intended use, and quality of construction, the remaining service life is estimated to be greater than five years. A re-inspection should be performed five years from the date of this inspection.

CERTIFICATION

I hereby certify that the installed tanks and components of the piping system referenced in this report have been properly inspected and are capable of handling the material referenced in this report without the likelihood of release.

I certify under penalty of law that this document was prepared under my direction and supervision in accordance with a system designed to assure that qualified personnel properly gather and evaluate the information submitted. Based on my inquiry of the person or persons who manage the system, or those persons directly responsible for gathering the information, the information submitted is, to the best of my knowledge and belief, true, accurate, and complete. I am aware that there are significant penalties for submitting false information, including the possibility of fine and imprisonment for knowing violations.

REGISTERED PROFESSIONAL ENGINEER
GEORGE ONEY
exp 6/30/05
No. CH004494
CHEMICAL
STATE OF CALIFORNIA

George A. Oney, P.E.
Chemical Engineer
Registration No. CH004494

Tank Certification Report

Tank T-103

Prepared for: Romic Environmental Technologies Corp,
6760 West Allison Road
Chandler, AZ 85226

Prepared by: Metro Environmental Services, Inc.
1256-B West Brooks Street
Ontario, CA 91762

INTRODUCTION

On January 26, 2005 in accordance with Title 22 CCR Section 66264.192, "Design and Installation of New Tank Systems and Components", Metro Environmental Services, Inc. performed an assessment of Tank #103, a 5,800-gallon hazardous waste storage tank at the Romic Environmental Technologies Corp facility located at 6760 West Allison Road in Chandler, Arizona. The tank and associated piping system serve to store hazardous waste.

ASSESSMENT ITEMS

Compatibility of Waste Material with Tank Materials of Construction

The waste material contained in this tank is organic and/or aqueous hazardous waste. This material is compatible with the materials of construction of the tank and piping.

Tank / Piping System Details

The 5,800-gallon tank, (Tank #103), is constructed of carbon steel. Please refer to the attached Tank Specification Sheet for tank details.

The piping system for this tank is constructed of carbon steel. All piping appears to have been installed using good engineering and mechanical practices and is supported adequately to prevent against physical damage and excessive stress due to settlement, vibration, expansion, or contraction.

Leak Detection and Spill Prevention Equipment / Instrumentation

The entire tank and piping system is aboveground and is easily accessible. Leak detection will be by visual inspection. Qualified personnel will inspect the entire tank and piping system at least once per day.

Tank Support System

The tank is supported by four steel legs that rest directly upon the concrete slab floor. This tank system was installed under the supervision of site personnel.

Tank Secondary Containment System

The tank is located in a containment area that also contains a number of additional hazardous waste storage and processing tanks. Containment has been certified separately by others.

Tank and Piping System Installation Inspection

The tank and piping was inspected for the following installation defects: weld breaks; punctures; cracks; corrosion; damaged fittings; and other structural damage or inadequate construction or installation. No discrepancies were noted.

System Tightness Testing

The system was tested for tightness by filling with product prior to the final inspection. No leakage or signs of previous leakage were evident during the final inspection.

Estimated Remaining Service Life

The tank was installed in 1992. Considering the current age of the system, materials of construction, intended use, and quality of construction, the remaining service life is estimated to be greater than five years. A re-inspection should be performed five years from the date of this inspection.

CERTIFICATION

I hereby certify that the installed tanks and components of the piping system referenced in this report have been properly inspected and are capable of handling the material referenced in this report without the likelihood of release.

I certify under penalty of law that this document was prepared under my direction and supervision in accordance with a system designed to assure that qualified personnel properly gather and evaluate the information submitted. Based on my inquiry of the person or persons who manage the system, or those persons directly responsible for gathering the information, the information submitted is, to the best of my knowledge and belief, true, accurate, and complete. I am aware that there are significant penalties for submitting false information, including the possibility of fine and imprisonment for knowing violations.

REGISTERED PROFESSIONAL ENGINEER
GEORGE ONEY
exp 6/30/05
No. CH004494
CHEMICAL
STATE OF CALIFORNIA

George A. Oney, P.E.
Chemical Engineer
Registration No. CH004494

Tank Certification Report

Tank T-104

Prepared for: Romic Environmental Technologies Corp,
6760 West Allison Road
Chandler, AZ 85226

Prepared by: Metro Environmental Services, Inc.
1256-B West Brooks Street
Ontario, CA 91762

INTRODUCTION

On January 26, 2005 in accordance with Title 22 CCR Section 66264.192, "Design and Installation of New Tank Systems and Components", Metro Environmental Services, Inc. performed an assessment of Tank #104, a 5,800-gallon hazardous waste storage tank at the Romic Environmental Technologies Corp facility located at 6760 West Allison Road in Chandler, Arizona. The tank and associated piping system serve to store hazardous waste.

ASSESSMENT ITEMS

Compatibility of Waste Material with Tank Materials of Construction

The waste material contained in this tank is organic and/or aqueous hazardous waste. This material is compatible with the materials of construction of the tank and piping.

Tank / Piping System Details

The 5,800-gallon tank, (Tank #104), is constructed of carbon steel. Please refer to the attached Tank Specification Sheet for tank details.

The piping system for this tank is constructed of carbon steel. All piping appears to have been installed using good engineering and mechanical practices and is supported adequately to prevent against physical damage and excessive stress due to settlement, vibration, expansion, or contraction.

Leak Detection and Spill Prevention Equipment / Instrumentation

The entire tank and piping system is aboveground and is easily accessible. Leak detection will be by visual inspection. Qualified personnel will inspect the entire tank and piping system at least once per day.

Tank Support System

The tank is supported by four steel legs that rest directly upon the concrete slab floor. This tank system was installed under the supervision of site personnel.

Tank Secondary Containment System

The tank is located in a containment area that also contains a number of additional hazardous waste storage and processing tanks. Containment has been certified separately by others.

Tank and Piping System Installation Inspection

The tank and piping was inspected for the following installation defects: weld breaks; punctures; cracks; corrosion; damaged fittings; and other structural damage or inadequate construction or installation. No discrepancies were noted.

System Tightness Testing

The system was tested for tightness by filling with product prior to the final inspection. No leakage or signs of previous leakage were evident during the final inspection.

Estimated Remaining Service Life

The tank was installed in 1992. Considering the current age of the system, materials of construction, intended use, and quality of construction, the remaining service life is estimated to be greater than five years. A re-inspection should be performed five years from the date of this inspection.

CERTIFICATION

I hereby certify that the installed tanks and components of the piping system referenced in this report have been properly inspected and are capable of handling the material referenced in this report without the likelihood of release.

I certify under penalty of law that this document was prepared under my direction and supervision in accordance with a system designed to assure that qualified personnel properly gather and evaluate the information submitted. Based on my inquiry of the person or persons who manage the system, or those persons directly responsible for gathering the information, the information submitted is, to the best of my knowledge and belief, true, accurate, and complete. I am aware that there are significant penalties for submitting false information, including the possibility of fine and imprisonment for knowing violations.

REGISTERED PROFESSIONAL ENGINEER
GEORGE ONEY
exp 6/30/05
No. CH004494
CHEMICAL
STATE OF CALIFORNIA

George A. Oney, P.E.
Chemical Engineer
Registration No. CH004494

Project Name: ROMIC SOUTHWEST – Chandler, AZ

Tank I.D.No. TK–101 to TK–104

Location: Tank Farm AB

Service: Waste Receiving/Storage

Contents: Organic/aqueous

Size: 5,800 gal. S.G.: 1.0–1.6

Fill GPM: 250 Empty GPM: 250

Support: 4 Legs

Insulation: n/a Agitator: n/a

Weight: 4,000± lbs. Empty

81,400± lbs. Full

Temp (°F) Ambient

Pressure (Psig): ATM

Seismic Zone: 2

Material: Carbon Steel

Method of Construction: Welded

CONNECTION

No.	Size	Type	Rating	Function
A	4"	RF	150#	BOTTOM NOZZLE
B	3"	RF	150#	SIDE OUTLET
C	3"	RF	150#	VENT
D	3"	RF	150#	SPARE
L	3"	RF	150#	LEVEL INDICATOR
M_1	24"	FF	n/a	TOP MANWAY
M_2	24"	FF	n/a	SIDE MANWAY
S	1"	HC	3000#	SAMPLE PORT

REMARKS

1. Standard 1:12 sloped top.
2. Bottom cone with 70.2° included angle.
3. Tank supported on 4 legs.
4. See Brown Tank & Steel W/O–3882.

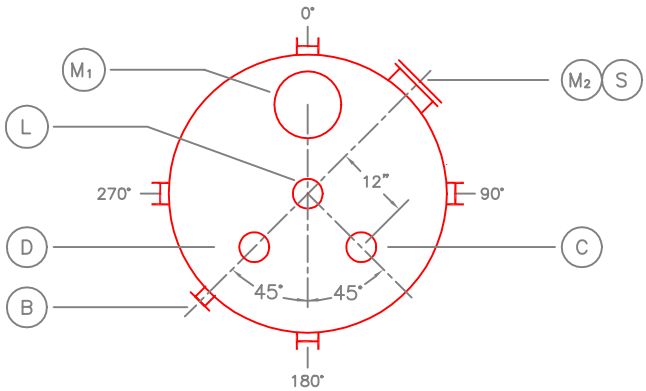

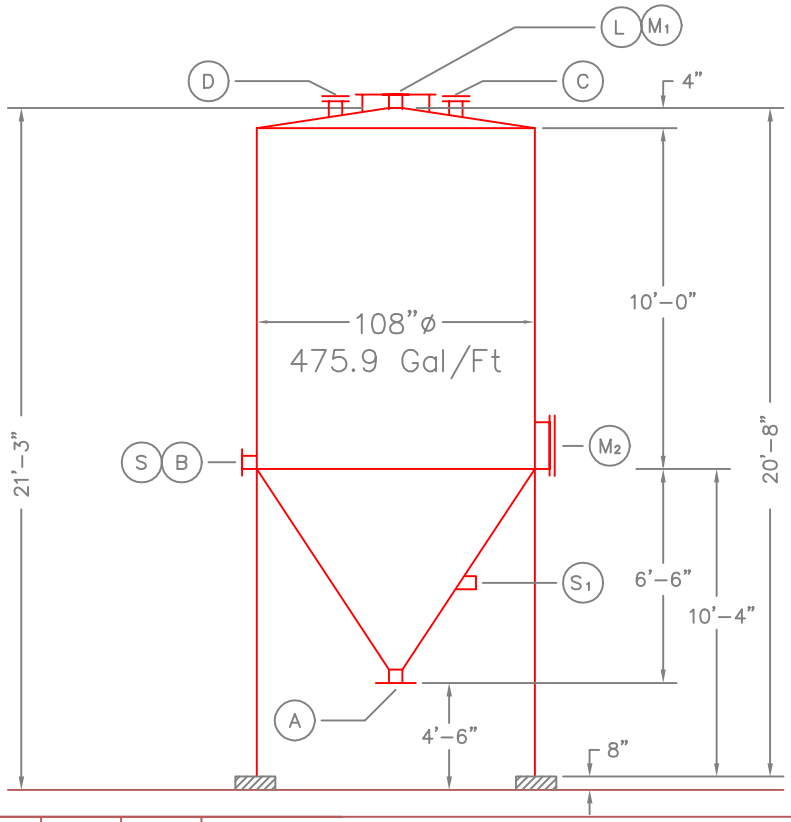

Rev No.	Revision	By	Date	Apprvd	Date
1	ADD TANKS 106 TO 108	MW	11–13–95		
2	Update for 2004 Part B	RP	4–7–04	WK	4–04
3	Revise Temperature rating	RP	8–22–05	MS	8–05

ROMIC
ENVIRONMENTAL TECHNOLOGIES CORP.
ROMIC SOUTHWEST, CHANDLER, ARIZONA

Drawing Number Tks 101 – Tks 104

METRO ENVIRONMENTAL SERVICES, INC.

1256-B West Brooks Street, Ontario, CA 91762
Tel: (909) 983-3848 Fax: (909) 983-3498

LSI PN: **2K502** Tank 101, 102, 103 & 104 **Issued:** **01/31/05**
Project Name: **ROMIC Environmental Technologies Corporation**
Project Location: **ROMIC Southwest, Chandler, Arizona.**

Table of Contents:

		Page No.
1	Scope of work, design loads and tank data	1
2	Seismic and wind analysis for overturning moment	2
3	Check support column, base plate and anchor bolts	3

Registered Professional Engineer (Civil)
CERTIFICATE NO
31521
WANTHONG
STEVENSON
LIM
Date Signed
ARIZONA U.S.A.

SCOPE OF WORK: **Tank Designation:** **101 to 104**

- Analyzed existing anchorage for 9'-0" Diameter by 16'-6" high tank with (4) W8x24 legs.

- Check existing 1"x 12" x 12" base plate w/(2) 7/8" dia. anchor bolts.

DESIGN LOADS:

2000 International Building Code. 80 MPH wind, Seismic Use group II

WIND: F= Qz * G * Cf * Af

Where Qz = 0.00256 Kz Kzt Kd V^2 I

Qz = 0.00256*0.9*1.0*0.95*90^2*1.0 = 17.73 psf

F wnd = 2532 lbs.

M otm = F wind * H otm = 40508 lbs-ft

H =	21.33	ft
D =	9	ft
Kz =	0.9	Tbl 6-3 Case2
Kzt =	1	Tbl 6-4 Flat
Kd =	0.95	Tbl 6-4
V =	90	MPH Fig 6-1
I =	1	Tbl 6-1
For H/D =	2.37	
Cf =	1.4	Tbl 6-19
Gf =	0.85	Sec 6.5.8
Af =	120	Sq. Ft.
H otm =	16	ft

Location: Chandler State: Arizona

From Fig. 1615(1): Ss = 0.21 g

From Fig. 1615(2): S1 = 0.063 g

Sds = 0.67 Fa Ss = 0.224 W

Siteclass: D

Fa =	1.6	Tbl 1615.1.2(1)
R =	3	Tbl 1622.2.5(1)
Omega =	2	Tbl 1622.2.5(1)
Ie =	1.25	Tbl 1622.2.5(2)
W =	83000	lbs

V seismic = Cs W Eq. 16-34

= 0.093 W

Cs = Sds /R * I = 0.0933

Cs min=0.044SdsI = 0.0123

Use Cs = 0.0933

T = 0.00000765*(L / D)^2 *(wD / t) ^ 0.5 = 0.000000765*(16.5/9)^2 *(46000/16.5*9/0.34)^.5

= 0.000842 < 0.06 Rigid Structure

Vsimplified = 1.2 Sds W / R = 0.090 W

Vnonstr = 0.14 Sds Ie = 0.039 W

Cs min nonstr = 0.8S1 I / R = 0.021 W

Vs rigid nonstr = 0.3 Sds I W = 0.084 W

Use Vs =	**0.093**	**W**
Vs asd =	**0.067**	**W**

Overturning Moment = Vs W * 1.2 sloshing * H otm = **106240** lbs-ft **Seismic Control**

Check existing anchorage according to API 650 Appendix E - Seismic design of Storage Tanks

Given information:

Material:	Carbon steel
Thickness:	0.34"
Concrete slab thickness:	Min 6"
Full Tank +wt tank:	81400 lbs
Agitator:	0 lbs
Misc valves and structures:	1600 lbs

Seismic Analysis per API-650 Appendix E

Seismic zone, Z = (Zone 4=0.4,zone 3=0.3,zone 2=0.2,zone 1=0.075)			0.40	
Seismic Importance factor, Is = (Max I = 1.5, **normally I = 1.0**)			1.25	
Site coefficient from soil type, s = (S4=2, **S3=1.5**, S2=1.2, S1=1.0)			1.50	
Spcific gravity of liquid, **G** =			1.6	
Tank diameter, **D** =			9.00	ft
Height of tank, **Ht** =			21.33	ft
Fill height from top of floor, **H** =			21.33	ft
Weight of content, **Wt** = 22/7*(D/2)^2*H*62.4pcf/1000 =			77.40	kips
Weight of shell, uncorroded,**Ws**= .49*(.34/12*2*22/7*R*10)=		3.927	3.927	kips
Weight of roof steel, uncorroded, **Wr'** = .49*.20/12*2*22/7*4.5 =			0.219	kips
Roof equipment load in seismic, **We** =			0.10	kips
Ratio of **D / H** =			0.42	
Weight or roof & equipment load, **Wr** = Wr' + We =			0.32	Kips
Height of center of gravity of shell, **Xs** = H / 2 =			10.67	ft
From Figure E-2 Effective masses, **W1 / Wt** =	*0.934*		0.93	
Contents in unison w/ shell, **W1** = Wt * (W1 / Wt) =			72.30	Kips
From Figure E-2 Effective masses, **W2 / Wt** =	*0.113*		0.11	
First sloshing mode contents, **W2** = Wt * (W2 / Wt) =			8.78	Kips
From Figure E-3 Centroids of seismic forces, **X1 / H** =	*0.457*		0.46	
Height to centroid, **X1** = H * (X1 / H) =			9.74	
From Figure E-3 Centroids of seismic forces, **X2 / H** =	*0.855*		0.86	
Height to centroid, **X2** = H * (X2 / H) =			18.24	
From Figure E-4 Factor k, k =	*0.581*		0.58	
Natural period of first mode, **T** = k * (D)^0.5 =			1.73	seconds
Lateral force coefficient, **C1** = **0.24**			0.24	
Lateral force coefficient, **C2** = **C2 = 0.3S/T =**			0.26	

Base shear **Vs** = Z * I *(C1 * (Ws + Wr + W1) + C2 * W2) =	10.33	Kips
Overturning, **Mot** = Z * I *(C1*Ws*Xs + C1*Wr*Ht + C1*W1*X1 + C2*W2*X2)=	**133.60**	K-ft
Friction resistance from contents,shell, roof steel, **Ffric**=0.4 *(Wt+Ws+Wr') =	32.62	Kips
Factor of safety for sliding, **FSs** = Fric / Vs =	**3.16 > 1.5**	

Calculate resistance load against overturning:

Yield strength of tank material, **Fy** =			36.00	ksi
Thickness of bottom plate, **tb** = max (tf -co), thickness of floor or 0.25 =			1.00	
Wt of contents allow for OT calc. per cicumference,**WL**=7.9 tb(Fby G H)^0.5=			8756.56	plf
Max allowable for WL = 1.25 G H D =	383.94 plf	**Use:**	383.94	plf
Resistance to OT by contents, **Pr** = 22/7 * D * WL =			10.86	Kips
Resistance to OT by shell and roof, **Psr** = Ws + Wr =			4.25	Kips
Total resistance to OT moment, **Mr** = (Pr + Psr) * D / 2 =			67.98	k-ft

Mot > Mr, Anchorage required

Wind analysis per API 650 section 3.11 Wind load on Tanks

Based on 30 psf on vertical plane surface or 22 psf on projected area of cylindrical surface

Wind pressure, **qw** =	22.00	psf
Base shear from wind, **Vw** = qw * Ht * Area =	2.64	Kips
Overturning due to wind, **Motmw** = Vw * Ht / 2 =	42.24	K-ft

Since Resistance to Overturning of tank <seismic or wind overturning, anchorage req'd.

Check existing support column, base plate and anchor bolts.

Overturning, Mot = Z * I *(C1*Ws*Xs + C1*Wr*Ht + C1*W1*X1 + C2*W2*X2)= 133.60 k-ft
Base shear Vs = Z * I *(C1 * (Ws + Wr + W1) + C2 * W2) = 10.33 Kips

Shear along W8x24 column = 133.67 / 9 ft /2 cols = 7.42 Kips
Capacity of existing 1/4 fillet weld at 12" each side = 0.928*4*2*12 = 89.09 **Kips O.k.**

Capacity of W8x24 for 11 ft in axial compression = (fr AISC 3-31)) = 107 **Kips O.k.**
Shear per each bolt = Vs / 4col / 2 bolts each = 1.29 Kips O.K.
Tension load at (2) 7/8" diameter bolts = 7.42 / 2 bolts = 3.71 Kips OK
Cap of pullout cone fr each bolt = .55*.65*(22/7*12^2/4)*(3000)^0.5*4/3*3*1 8.86 **Kips O.k.**

Combined shear & tension = (1.29/6)^(5/3)+(3.71/11.5)^(5/3) = 0.22891 < 1.33

Check 1" x 12" x 12" base plate:

Fr ASIC 3-106: n = 2 in. m = 2 in. Fy =.75*36 = 27
fp = 7.42*2.2 / 12/12 = 0.113 ksi
t min = 2m *(fp / Fy)^0.5 = 0.26 in.
t min = 2n *(fp / Fy)^0.5 = 0.26 in. 1> 0.26 O.K.

Shear = 7.42 *2.2 / 8 = 2.04 Kips < Vall = 6.0 * 1.7 = 10.2 Kips

Existing (4) W8x31 columns w/(2) 7/8" dia. Anchors bolts with 1x12x12 base plate is adequate to resist the overturning moment.

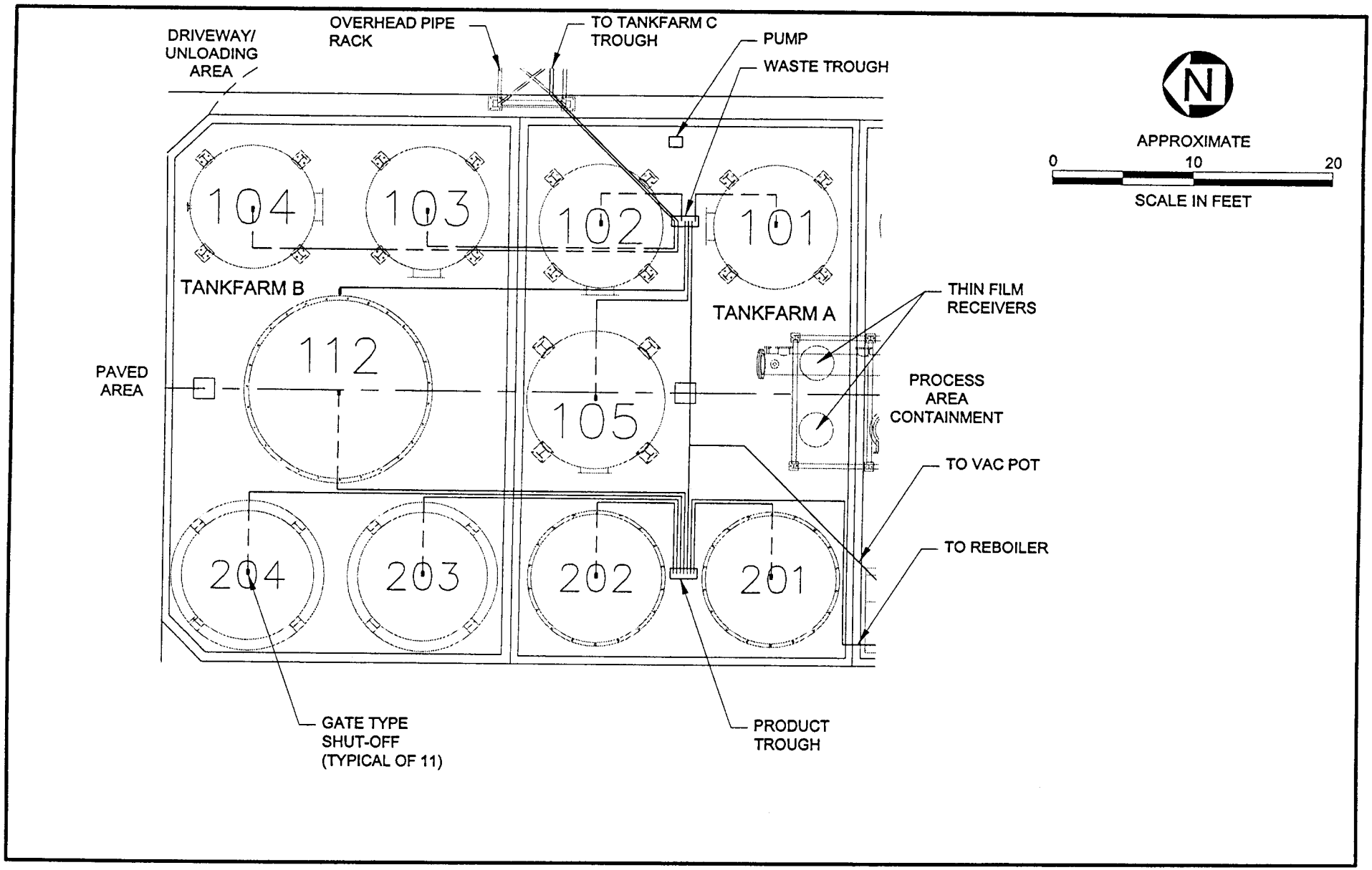

REFERENCE: BASEMAP PROVIDED BY:

ROMIC
ENVIRONMENTAL TECHNOLOGIES CORP.
ROMIC SOUTHWEST, CHANDLER, ARIZONA

URS

Tankfarm A & B

Romic - Southwest
Chandler, Arizona

Figure D-6

P:\ROMIC\CADD\FIGURES\A16453.DWG 02-14-05
XREF: P:\ROMIC\CADD\FIGURES\ROMIC-SITE.DWG

Tank Certification Report

Tank T-105

Prepared for: Romic Environmental Technologies Corp,
6760 West Allison Road
Chandler, AZ 85226

Prepared by: Metro Environmental Services, Inc.
1256-B West Brooks Street
Ontario, CA 91762

INTRODUCTION

On February 7, 2005 in accordance with Title 22 CCR Section 66264.192, "Design and Installation of New Tank Systems and Components", Metro Environmental Services, Inc. performed an assessment of Tank #105, a 5,900-gallon hazardous waste storage tank at the Romic Environmental Technologies Corp facility located at 6760 West Allison Road in Chandler, Arizona. The tank and associated piping system serve to store hazardous waste.

ASSESSMENT ITEMS

Compatibility of Waste Material with Tank Materials of Construction

The waste material contained in this tank is organic and/or aqueous hazardous waste. This material is compatible with the materials of construction of the tank and piping.

Tank / Piping System Details

The 5,900-gallon tank, (Tank #105), is constructed of carbon steel. Please refer to the attached Tank Specification Sheet for tank details.

The piping system for this tank is constructed of carbon steel. All piping appears to have been installed using good engineering and mechanical practices and is supported adequately to prevent against physical damage and excessive stress due to settlement, vibration, expansion, or contraction.

Leak Detection and Spill Prevention Equipment / Instrumentation

The entire tank and piping system is aboveground and is easily accessible. Leak detection will be by visual inspection. Qualified personnel will inspect the entire tank and piping system at least once per day.

Tank Support System

The tank is supported by four steel legs that rest directly upon the concrete slab floor. This tank system was installed under the supervision of site personnel.

Tank Secondary Containment System

The tank is located in a containment area that also contains a number of additional hazardous waste storage and processing tanks. Containment has been certified separately by others.

Tank and Piping System Installation Inspection

The tank and piping was inspected for the following installation defects: weld breaks; punctures; cracks; corrosion; damaged fittings; and other structural damage or inadequate construction or installation. No discrepancies were noted.

System Tightness Testing

The system was tested for tightness by filling with product prior to the final inspection. No leakage or signs of previous leakage were evident during the final inspection.

Estimated Remaining Service Life

The tank was installed in 1992. Considering the current age of the system, materials of construction, intended use, and quality of construction, the remaining service life is estimated to be greater than five years. A re-inspection should be performed five years from the date of this inspection.

CERTIFICATION

I hereby certify that the installed tanks and components of the piping system referenced in this report have been properly inspected and are capable of handling the material referenced in this report without the likelihood of release.

I certify under penalty of law that this document was prepared under my direction and supervision in accordance with a system designed to assure that qualified personnel properly gather and evaluate the information submitted. Based on my inquiry of the person or persons who manage the system, or those persons directly responsible for gathering the information, the information submitted is, to the best of my knowledge and belief, true, accurate, and complete. I am aware that there are significant penalties for submitting false information, including the possibility of fine and imprisonment for knowing violations.

REGISTERED PROFESSIONAL ENGINEER
GEORGE A. ONEY
exp 6/30/05
No. CH004494
CHEMICAL
STATE OF CALIFORNIA

George A. Oney, P.E.
Chemical Engineer
Registration No. CH004494

Project Name: ROMIC SOUTHWEST – Chandler, AZ

Tank I.D.No. TK–105

Location: Tank Farm AB

Service: Fuels/ Still Bottoms

Contents: Organic/aqueous

Size: 5,900 gal. S.G.: 1.0–1.6

Fill GPM: 250 Empty GPM: 250

Support: 4 Legs

Insulation: n/a Agitator: 7 1/2 HP

Other: Four Baffles 8"w, 1" from wall

Weight: 5,000± lbs. Empty

83,700± lbs. Full

Temp (°F) 300° MAX

Pressure (Psig): ATM

Seismic Zone: 2

Material: Carbon Steel

Method of Construction: Welded

CONNECTION

No.	Size	Type	Rating	Function
A	4"	RF	150#	BOTTOM NOZZLE
B	3"	RF	150#	SIDE OUTLET
C	16"	RF	150#	AGITATOR
D	3"	RF	150#	SPARE
E	2"	RF	150#	LEVEL INDICATOR
L	2"	RF	150#	TOP LEVEL
M_1	18"	FF	n/a	TOP MANWAY
M_2	18"	FF	n/a	SIDE MANWAY
S	1"	HC	3000#	SAMPLE PORT

REMARKS

1. Elliptical 2:1 Ratio top & bottom heads
2. Tank supported on 4 legs.
3. Internal baffles (4)–8"x174"L mounted 1" from wall at 90°

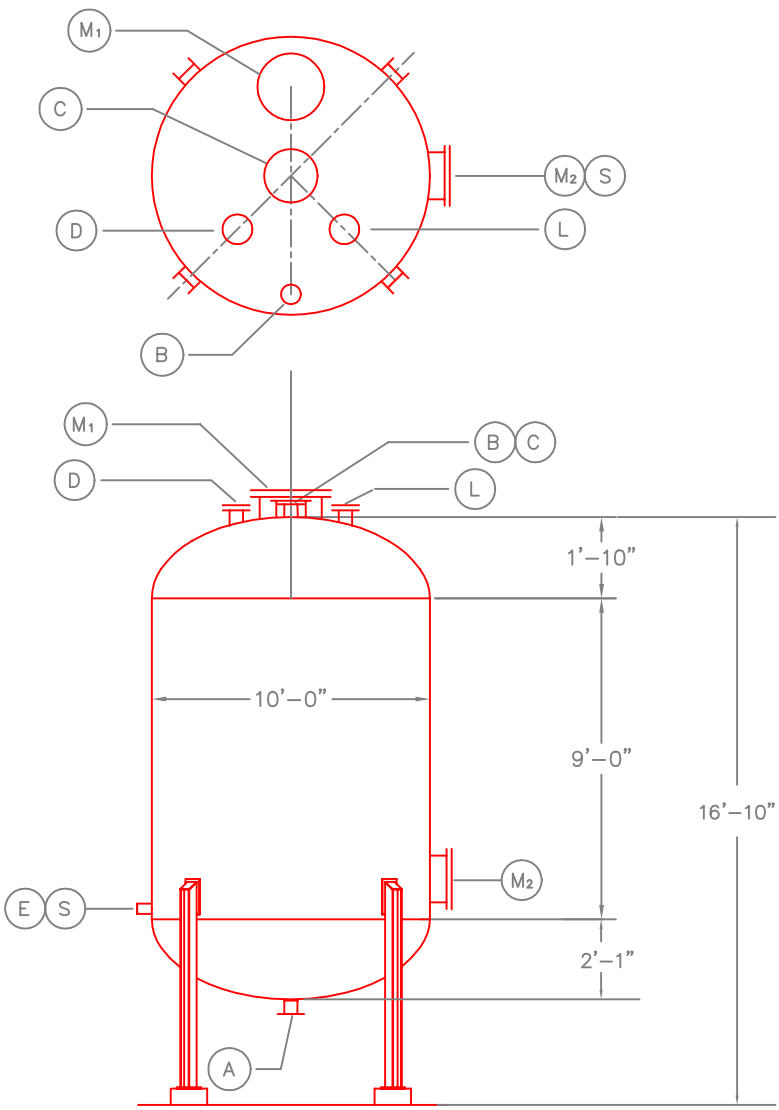

Rev No.	Revision	By	Date	Apprvd	Date
1	Update for 2004 Part B	RP	4–7–04	WK	4–04
2	Revise Temperature rating	RP	8–22–05	MS	8–05

ROMIC
ENVIRONMENTAL TECHNOLOGIES CORP.
ROMIC SOUTHWEST, CHANDLER, ARIZONA

Drawing Number Tk 105

METRO ENVIRONMENTAL SERVICES, INC.

1256-B West Brooks Street, Ontario, CA 91762
Tel: (909) 983-3848 Fax: (909) 983-3498

LSI PN: **2K502** Tank 105 **Issued:** **12/10/02**
Project Name: **Romic Environmental Technologies Corporation**
Project Location: **ROMIC Southwest, Chandler, Arizona.**

Table of Contents: **Page No.**

1	Scope of work, design loads and tank data	1
2	Seismic and wind analysis for overturning moment	2
3	Check existing support column, base plate and anchor bolts	3

Registered Professional Engineer (Civil)
CERTIFICATE NO
31521
WANTHONG
STEVENSON
LIM
Date Signed 12/6/02
ARIZONA, U.S.A.

SCOPE OF WORK: **Tank Designation:** **105**

- Analyzed existing anchorage for 10'-0" Diameter by 13" high tank with (4) 3'-6" W8x31 legs.
- Overall top of tank elevation is 16'-10" with 10'-4" as center of tank for apply loads
- Check existing anchor bolts, base plate column and column connections.

DESIGN LOADS:

2000 International Building Code. 80 MPH wind, Seismic Use group II

WIND: F= Qz * G * Cf * Af

Where Qz = 0.00256 Kz Kzt Kd V^2 I

Qz = 0.00256*0.9*1.0*0.95*90^2*1.0 = 17.73 psf

F wnd = 2743 lbs.

M otm = F wind * H otm = 28332 lbs-ft

H =	16.83	ft
D =	10	ft
Kz =	0.9	Tbl 6-3 Case2
Kzt =	1	Tbl 6-4 Flat
Kd =	0.95	Tbl 6-4
V =	90	MPH Fig 6-1
I =	1	Tbl 6-1
For H/D =	1.683	
Cf =	1.4	Tbl 6-19
Gf =	0.85	Sec 6.5.8
Af =	130	Sq. Ft.
H otm =	10.33	ft

Location: Chandler State: Arizona

From Fig. 1615(1): Ss = 0.21 g

From Fig. 1615(2): S1 = 0.063 g

Sds = 0.67 Fa Ss = 0.224 W

Siteclass:	D	
Fa =	1.6	Tbl 1615.1.2(1)
R =	3	Tbl 1622.2.5(1)
Omega =	2	Tbl 1622.2.5(1)
Ie =	1.25	Tbl 1622.2.5(2)
W =	86000	lbs

V seismic = Cs W Eq. 16-34

= 0.093 W

Cs = Sds /R * I = 0.0933

Cs min=0.044SdsI = 0.0123

Use Cs = 0.0933

T = 0.00000765*(L / D)^2 *(wD / t) ^ 0.5 = 0.000000765*(13./10)^2 *(46000/13*10/0.34)^.5

= 0.000417 < 0.06 Rigid Structure

Vsimplified = 1.2 Sds W / R = 0.090 W

Vnonstr = 0.14 Sds Ie = 0.039 W

Cs min nonstr = 0.8S1 I / R = 0.021 W

Vs rigid nonstr = 0.3 Sds I W = 0.084 W

Use Vs = 0.093 W

Vs asd = **0.067 W**

Overturning Moment = Vs W * 1.2 sloshing * H otm = **71070.4** lbs-ft **Seismic Control**

Check existing anchorage according to API 650 Appendix E - Seismic design of Storage Tanks

Given information:

Material:	Carbon steel
Thickness:	0.34"
Concrete slab thickness:	Min 6"
Full Tank +wt tank:	83700 lbs
Agitator:	500 lbs
Misc valves and structures:	1800 lbs

Seismic Analysis per API-650 Appendix E

Seismic zone, Z = (Zone 4=0.4,zone 3=0.3,zone 2=0.2,zone 1=0.075)		0.40	
Seismic Importance factor, Is = (Max I = 1.5, **normally I = 1.0**)		1.25	
Site coefficient from soil type, s = (S4=2, **S3=1.5**, S2=1.2, S1=1.0)		1.50	
Spcific gravity of liquid, **G** =		1.6	
Tank diameter, **D** =		10.00	ft
Height of tank, **Ht** =		13.00	ft
Fill height from top of floor, **H** =		16.83	ft
Weight of content, **Wt** =		78.70	kips
Weight of shell, uncorroded,**Ws**= .49*(.34/12*2*22/7*5*13)=	5.672333	5.672	kips
Weight of roof steel, uncorroded, **Wr'** = .49*.20/12*2*22/7*5=		0.244	kips
Roof equipment load in seismic, **We** =		0.50	kips
Ratio of **D / H** =		0.77	
Weight or roof & equipment load, **Wr** = Wr' + We =		0.74	Kips
Height of center of gravity of shell, **Xs** = H / 2 =		8.42	ft
From Figure E-2 Effective masses, **W1 / Wt** =	*0.861*	0.86	
Contents in unison w/ shell, **W1** = Wt * (W1 / Wt) =		67.76	Kips
From Figure E-2 Effective masses, **W2 / Wt** =	*0.195*	0.20	
First sloshing mode contents, **W2** = Wt * (W2 / Wt) =		15.38	Kips
From Figure E-3 Centroids of seismic forces, **X1 / H** =	*0.428*	0.43	
Height to centroid, **X1** = H * (X1 / H) =		7.20	
From Figure E-3 Centroids of seismic forces, **X2 / H** =	*0.767*	0.77	
Height to centroid, **X2** = H * (X2 / H) =		12.90	
From Figure E-4 Factor k, k =	*0.577*	0.58	
Natural period of first mode, **T** = k * (D)^0.5 =		1.83	seconds
Lateral force coefficient, **C1 = 0.24**		0.24	
Lateral force coefficient, **C2** = **C2 = 0.3S/T =**		0.25	

Base shear **Vs** = Z * I *(C1 * (Ws + Wr + W1) + C2 * W2) =	10.80 Kips
Overturning, **Mot** = Z * I *(C1*Ws*Xs + C1*Wr*Ht + C1*W1*X1 + C2*W2*X2)=	**85.94** K-ft
Friction resistance from contents,shell, roof steel, **Ffric**=0.4 *(Wt+Ws+Wr') =	33.85 Kips
Factor of safety for sliding, **FSs** = Fric / Vs =	**3.13 > 1.5 OK**

Calculate resistance load against overturning:

Yield strength of tank material, **Fy** =		36.00	ksi
Thickness of bottom plate, **tb** = max (tf -co), thickness of floor or 0.25 =		1.00	
Wt of contents allow for OT calc. per cicumference,**WL**=7.9 tb(Fby G H)^0.5=		7778.92	plf
Max allowable for WL = 1.25 G H D = 336.66 plf	**Use:**	336.66	plf
Resistance to OT by contents, **Pr** = 22/7 * D * WL =		10.58	Kips
Resistance to OT by shell and roof, **Psr** = Ws + Wr =		6.42	Kips
Total resistance to OT moment, **Mr** = (Pr + Psr) * D / 2 =		84.98	k-ft

Mot > Mr, Anchorage required

Wind analysis per API 650 section 3.11 Wind load on Tanks

Based on 30 psf on vertical plane surface or 22 psf on projected area of cylindrical surface

Wind pressure, **qw** =	22.00	psf
Base shear from wind, **Vw** = qw * Ht * D =	2.86	Kips
Overturning due to wind, **Motmw** = Vw * 10.33=	29.54	K-ft

Since Resistance to Overturning of tank <seismic or wind overturning, anchorage req'd.

Check existing support column, base plate and anchor bolts.

Overturning, Mot = Z * I *(C1*Ws*Xs + C1*Wr*Ht + C1*W1*X1 + C2*W2*X2)= 85.94 k-ft
Base shear Vs = Z * I *(C1 * (Ws + Wr + W1) + C2 * W2) = 10.80 Kips

Shear along W8x31 column = 85.94 / 10 ft/2 cols = 4.30 Kips
Capacity of existing 1/4 fillet weld at 24" each side = 0.928*4*2*24 = 178.18 **Kips O.k.**

Capacity of W8x31 for 1.5 ft in axial compression = (fr AISC 3-31)) = 178 **Kips O.k.**

Tension load at (4) 1/2" diameter bolts = 4.3 / 4 bolts = 1.07 Kips
Cap of pullout cone fr 4 bolts = .55*.65*(22/7*10^2/4)*(3000)^0.5*4/3*3*4 35.45 **Kips O.k.**

Check 1" x 12 x 12" base plate:
Fr ASIC 3-106: n = 1.5 in. m = 1.5 in. Fy =.75*36 = 27
fp = T*2.2 / 12/12 = 0.066 ksi
t min = 2m *(fp / Fy)^0.5 = 0.15 in.
t min = 2n *(fp / Fy)^0.5 = 0.15 in. 1> 0.16 O.K.

Shear = 10.8 *2.2 / 16 = 1.48 Kips < Vall = 1.96 * 1.7 = 3.332 Kips

Therefore the existing (4) W8x31 support columns with 1"x12"x12" + (4) 1/2" diameter anchor bolts are still adequate to resist the overturning moment.

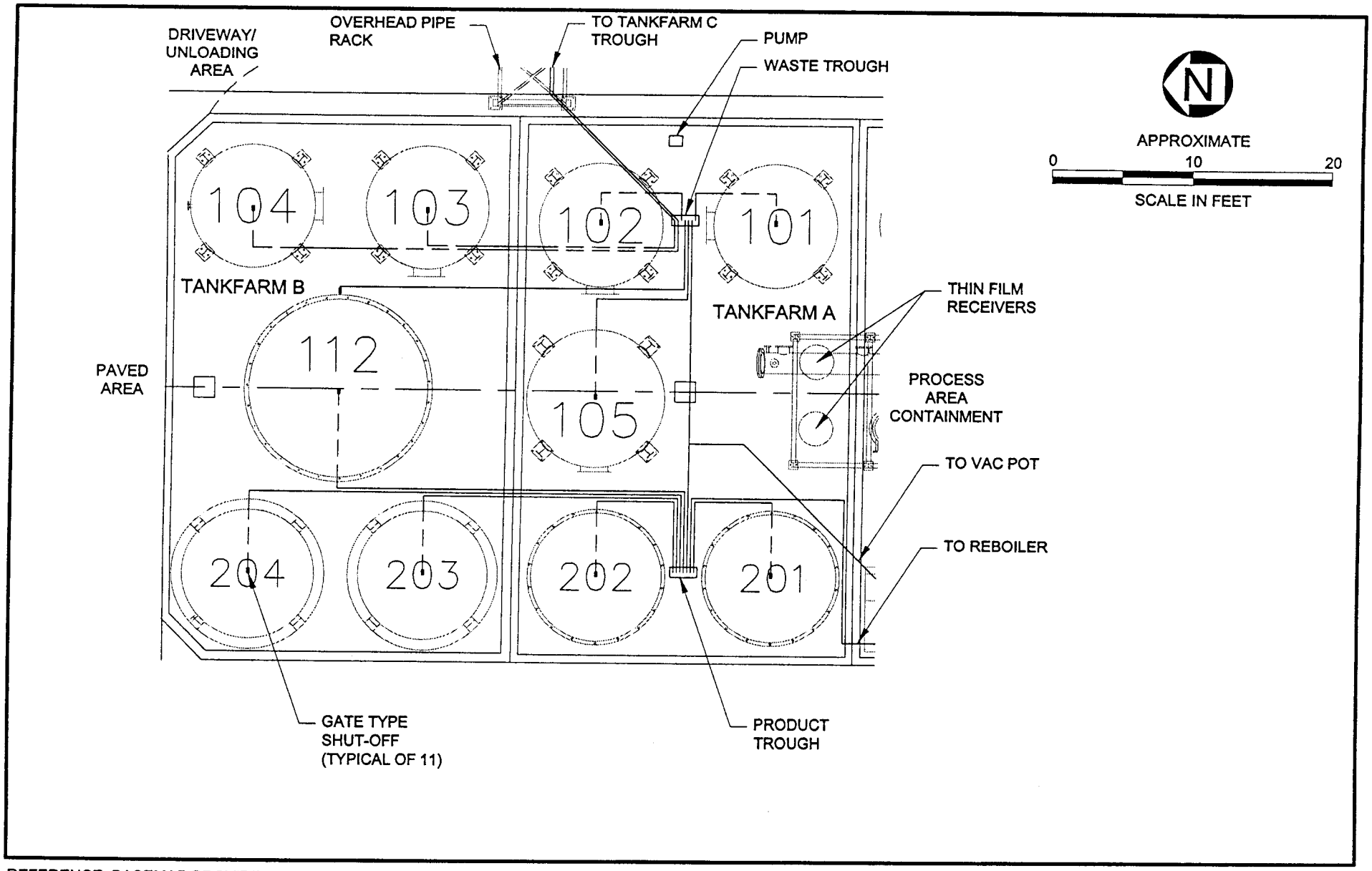

REFERENCE: BASEMAP PROVIDED BY:

ROMIC
ENVIRONMENTAL TECHNOLOGIES CORP.
ROMIC SOUTHWEST, CHANDLER, ARIZONA

URS

Tankfarm A & B

Romic - Southwest
Chandler, Arizona

Figure D-6

P:\ROMIC\CADD\FIGURES\A16453.DWG 02-14-05
XREF: P:\ROMIC\CADD\FIGURES\ROMIC-SITE.DWG

Tank Certification Report

Tank T-112

Prepared for: Romic Environmental Technologies Corp,
6760 West Allison Road
Chandler, AZ 85226

Prepared by: Metro Environmental Services, Inc.
1256-B West Brooks Street
Ontario, CA 91762

INTRODUCTION

On February 7, 2005 in accordance with Title 22 CCR Section 66264.192, "Design and Installation of New Tank Systems and Components", Metro Environmental Services, Inc. performed an assessment of Tank #112, a 15,000-gallon hazardous waste storage tank at the Romic Environmental Technologies Corp facility located at 6760 West Allison Road in Chandler, Arizona. The tank and associated piping system serve to store hazardous waste.

ASSESSMENT ITEMS

Compatibility of Waste Material with Tank Materials of Construction

The waste material contained in this tank is organic and/or aqueous hazardous waste. This material is compatible with the materials of construction of the tank and piping.

Tank / Piping System Details

The 15,000-gallon tank, (Tank #112), is constructed of stainless steel. Please refer to the attached Tank Specification Sheet for tank details.

The piping system for this tank is constructed of carbon steel and stainless steel. All piping appears to have been installed using good engineering and mechanical practices and is supported adequately to prevent against physical damage and excessive stress due to settlement, vibration, expansion, or contraction.

Leak Detection and Spill Prevention Equipment / Instrumentation

The entire tank and piping system is aboveground and is easily accessible. Leak detection will be by visual inspection. Qualified personnel will inspect the entire tank and piping system at least once per day.

Tank Support System

The tank rests directly upon the concrete slab floor. This tank system was installed under the supervision of site personnel.

Tank Secondary Containment System

The tank is located in a containment area that also contains a number of additional hazardous waste storage and processing tanks. Containment has been certified separately by others.

Tank and Piping System Installation Inspection

The tank and piping was inspected for the following installation defects: weld breaks; punctures; cracks; corrosion; damaged fittings; and other structural damage or inadequate construction or installation. No discrepancies were noted.

System Tightness Testing

The system was tested for tightness by filling with product prior to the final inspection. No leakage or signs of previous leakage were evident during the final inspection.

Estimated Remaining Service Life

The tank was installed in 1992. Considering the current age of the system, materials of construction, intended use, and quality of construction, the remaining service life is estimated to be greater than five years. A re-inspection should be performed five years from the date of this inspection.

CERTIFICATION

I hereby certify that the installed tanks and components of the piping system referenced in this report have been properly inspected and are capable of handling the material referenced in this report without the likelihood of release.

I certify under penalty of law that this document was prepared under my direction and supervision in accordance with a system designed to assure that qualified personnel properly gather and evaluate the information submitted. Based on my inquiry of the person or persons who manage the system, or those persons directly responsible for gathering the information, the information submitted is, to the best of my knowledge and belief, true, accurate, and complete. I am aware that there are significant penalties for submitting false information, including the possibility of fine and imprisonment for knowing violations.

REGISTERED PROFESSIONAL ENGINEER
GEORGE ONEY
exp 6/30/05
No. CH004494
CHEMICAL
STATE OF CALIFORNIA

George A. Oney, P.E.
Chemical Engineer
Registration No. CH004494

Project Name: ROMIC SOUTHWEST – Chandler, AZ

Tank I.D.No. TK–112

Location: Tank Farm AB

Service: Fuels/ Still Bottoms/ Solvents

Contents: Organic/aqueous

Size: 15,000 gal. S.G.: 1.0–1.4

Fill GPM: 250 Empty GPM: 250

Support: Skirt

Insulation: n/a Agitator: 10 HP

Other: Agitator w/ Baffles Optional

Weight: 6,600± lbs. Empty

181,700± lbs. Full

Temp (°F) AMB.

Pressure (Psig): ATM.

Seismic Zone: 2

Material: Stainless steel

Method of Construction: Welded

CONNECTION

No.	Size	Type	Rating	Function
A	4"	RF	150#	BOTTOM NOZZLE
B	4"	RF	150#	SIDE OUTLET
C	2 1/2"	RF	150#	VENT
D	4"	RF	150#	SPARE
E	12"	RF	150#	LEVEL INDICATOR
M	24"	FF	n/a	TOP MANWAY
S	1"	HC	3000#	SAMPLE PORT

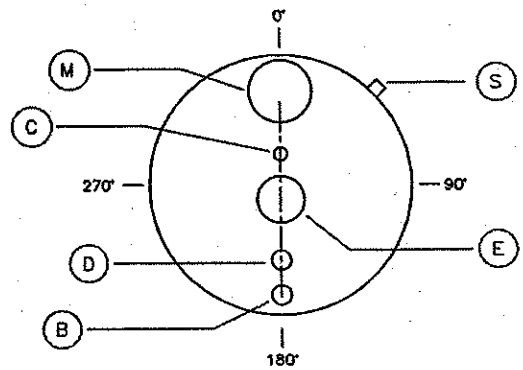

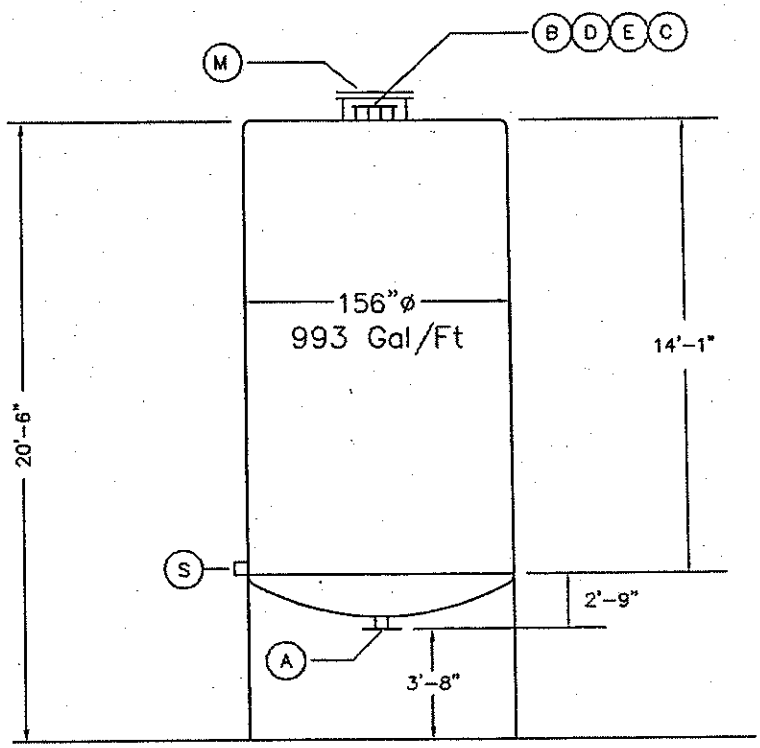

REMARKS

1. Standard Flat top.
2. Flanged and dished bottom
3. Tank supported on ring skirt.
4. See Brown Tank & Steel W/O–3882.

Rev No.	Revision	By	Date	Apprvd	Date
1	Update for 2001 Part B	RP	4–7–04	WK	4–04

ROMIC
ENVIRONMENTAL TECHNOLOGIES CORP.
ROMIC SOUTHWEST, CHANDLER, ARIZONA

Drawing Number Tk 112

METRO ENVIRONMENTAL SERVICES, INC.

1256-B West Brooks Street, Ontario, CA 91762
Tel: (909) 983-3848 Fax: (909) 983-3498

LSI PN: **2K502** Tank 112 and 113 **Issued:** **01/31/05**
Project Name: **Romic Environmental Technologies Corporation**
Project Location: **ROMIC Southwest, Chandler, Arizona.**

Table of Contents: **Page No.**

1	Scope of work, design loads and tank data	1
2	Seismic and wind analysis for overturning moment	2
3	Check anchorage.	3

Registered Professional Engineer
CERTIFICATE NO.
31521
WANTHONG
STEVENSON
LIM
Date Signed 2/9/05
ARIZONA, U.S.A.

SCOPE OF WORK: **Tank Designation:** **112 and 113**

- Analyzed existing anchorage for 13'-0" Diameter by 14'-1" high tank with 6'-5" skirt
- Existing tank skirt w/1/2" thick 3" width bottom ring and (9) 3/4" diameter anchor bolts evenly spaced.
- Check existing anchorage.

DESIGN LOADS:

2000 International Building Code. 90 MPH wind, Seismic Use group II

WIND: F= Qz * G * Cf * Af

Where Qz = 0.00256 Kz Kzt Kd V^2 I

Qz = 0.00256*0.9*1.0*0.95*90^2*1.0 = 17.73 psf

F wnd = 2658 lbs.

M otm = F wind * H otm = 35777 lbs-ft

H =	20.5	ft
D =	13	ft
Kz =	0.9	Tbl 6-3 Case2
Kzt =	1	Tbl 6-4 Flat
Kd =	0.95	Tbl 6-4
V =	90	MPH Fig 6-1
I =	1	Tbl 6-1
For H/D =	1.576923	
Cf =	1.4	Tbl 6-19
Gf =	0.85	Sec 6.5.8
Af =	126	Sq. Ft.
H otm =	13.4583	ft

Location: Chandler State: Arizona

From Fig. 1615(1): Ss = 0.21 g

From Fig. 1615(2): S1 = 0.063 g

Sds = 0.67 Fa Ss = 0.224 W

Siteclass: D

Fa =	1.6	Tbl 1615.1.2(1)
R =	3	Tbl 1622.2.5(1)
Omega =	2	Tbl 1622.2.5(1)
Ie =	1.25	Tbl 1622.2.5(2)
W =	182000	lbs

V seismic = Cs W Eq. 16-34

= 0.093 W

Cs = Sds /R * I = 0.0933

Cs min=0.044SdsI = 0.0123

Use Cs = 0.0933

T = 0.00000765*(L / D)^2 *(wD / t) ^ 0.5 = 0.000000765*(14./13)^2 *(46000/14*13/0.34)^.5

= 0.000314 < 0.06 Rigid Structure

Vsimplified = 1.2 Sds W / R = 0.090 W

Vnonstr = 0.14 Sds Ie = 0.039 W

Cs min nonstr = 0.8S1 I / R = 0.021 W

Vs rigid nonstr = 0.3 Sds I W = 0.084 W

Use Vs =	**0.093**	**W**
Vs asd =	**0.067**	**W**

Overturning Moment = Vs W * 1.2 sloshing * H otm = **195952.8** lbs-ft **Seismic Control**

Check existing anchorage according to API 650 Appendix E - Seismic design of Storage Tanks

Given information:

Material:	Carbon steel
Thickness:	0.34"
Concrete slab thickness:	Min 6"
Full Tank +wt tank:	181700 lbs
Agitator:	0 lbs
Misc valves and structures:	300 lbs

Seismic Analysis per API-650 Appendix E

Seismic zone, Z = (Zone 4=0.4,zone 3=0.3,zone 2=0.2,zone 1=0.075)			0.40	
Seismic Importance factor, Is = (Max I = 1.5, **normally I = 1.0**)			1.25	
Site coefficient from soil type, s = (S4=2, **S3=1.5**, S2=1.2, S1=1.0)			1.50	
Spcific gravity of liquid, **G** =			1.4	
Tank diameter, **D** =			9.00	ft
Height of tank, **Ht** =			14.08	ft
Fill height from top of floor, **H** =			20.50	ft
Weight of content, **Wt** =			175.10	kips
Weight of shell, uncorroded,**Ws=** .49*(.34/12*2*22/7*6.5*14)=		7.988347	7.988	kips
Weight of roof steel, uncorroded, **Wr'** = .49*.20/12*2*22/7*4.5=			0.317	kips
Roof equipment load in seismic, **We** =			0.30	kips
Ratio of **D / H** =			0.64	
Weight or roof & equipment load, **Wr** = Wr' + We =			0.62	Kips
Height of center of gravity of shell, **Xs** = H / 2 =			10.25	ft
From Figure E-2 Effective masses, **W1 / Wt** =	*0.890*		0.89	
Contents in unison w/ shell, **W1** = Wt * (W1 / Wt) =			155.80	Kips
From Figure E-2 Effective masses, **W2 / Wt** =	*0.166*		0.17	
First sloshing mode contents, **W2** = Wt * (W2 / Wt) =			29.03	Kips
From Figure E-3 Centroids of seismic forces, **X1 / H** =	*0.438*		0.44	
Height to centroid, **X1** = H * (X1 / H) =			8.99	
From Figure E-3 Centroids of seismic forces, **X2 / H** =	*0.797*		0.80	
Height to centroid, **X2** = H * (X2 / H) =			16.34	
From Figure E-4 Factor k, k =	*0.578*		0.58	
Natural period of first mode, **T** = k * (D)^0.5 =			1.73	seconds
Lateral force coefficient, **C1** = **0.24**			0.24	
Lateral force coefficient, **C2** = **C2 = 0.3S/T =**			0.26	

Base shear **Vs** = Z * I *(C1 * (Ws + Wr + W1) + C2 * W2) =	23.50	Kips
Overturning, **Mot** = Z * I *(C1*Ws*Xs + C1*Wr*Ht + C1*W1*X1 + C2*W2*X2)=	**213.61**	K-ft
Friction resistance from contents,shell, roof steel, **Ffric**=0.4 *(Wt+Ws+Wr') =	73.36	Kips
Factor of safety for sliding, **FSs** = Fric / Vs =	**3.12 > 1.5 OK**	

Calculate resistance load against overturning:

Yield strength of tank material, **Fy** =		36.00	ksi
Thickness of bottom plate, **tb** = max (tf -co), thickness of floor or 0.25 =		6.000	
Wt of contents allow for OT calc. per cicumference,**WL**=7.9 tb(Fby G H)^0.5=		48180.42	plf
Max allowable for WL = 1.25 G H D =	322.875 plf **Use:**	322.88	plf
Resistance to OT by contents, **Pr** = 22/7 * D * WL =		9.13	Kips
Resistance to OT by shell and roof, **Psr** = Ws + Wr =		8.61	Kips
Total resistance to OT moment, **Mr** = (Pr + Psr) * D / 2 =		79.82	k-ft

Mot > Mr, Anchorage required

Wind analysis per API 650 section 3.11 Wind load on Tanks

Based on 30 psf on vertical plane surface or 22 psf on projected area of cylindrical surface

Wind pressure, **qw** =	22.00	psf
Base shear from wind, **Vw** = qw * Ht * D =	4004.00	Kips
Overturning due to wind, **Motmw** = Vw * 14/2=	53887.03	K-ft

Since Resistance to Overturning of tank <seismic or wind overturning, anchorage req'd.

Check existing (9) 3/4" diameter anchor bolts.

Overturning, Mot = Z * I *(C1*Ws*Xs + C1*Wr*Ht + C1*W1*X1 + C2*W2*X2)=	213.61	k-ft
Base shear Vs = Z * I *(C1 * (Ws + Wr + W1) + C2 * W2) =	23.50	Kips

Consider only four bolts are resisting overturning at one time.

Tension of one bolt = 213.61 / 13 ft / 4 bolts =	4.11	Kips
Shear of one bolt = 23.5 / 9 =	2.61	Kips
Combined stress of tension and shear = (4.11/4.4)^(5/3)+ (2.61/8.4)^(5/3)=	1.03	**< 1.33**
Cap of pullout cone fr each bolt = .55*.65*(22/7*10^2/4)*(3000)^0.5*4/3*3*1	6.15	**Kips O.k.**

Therefore the existing 9' diameter flat bottom tank with (9) 3/4" diameter bolt is still adequate to resist the overturning moment.

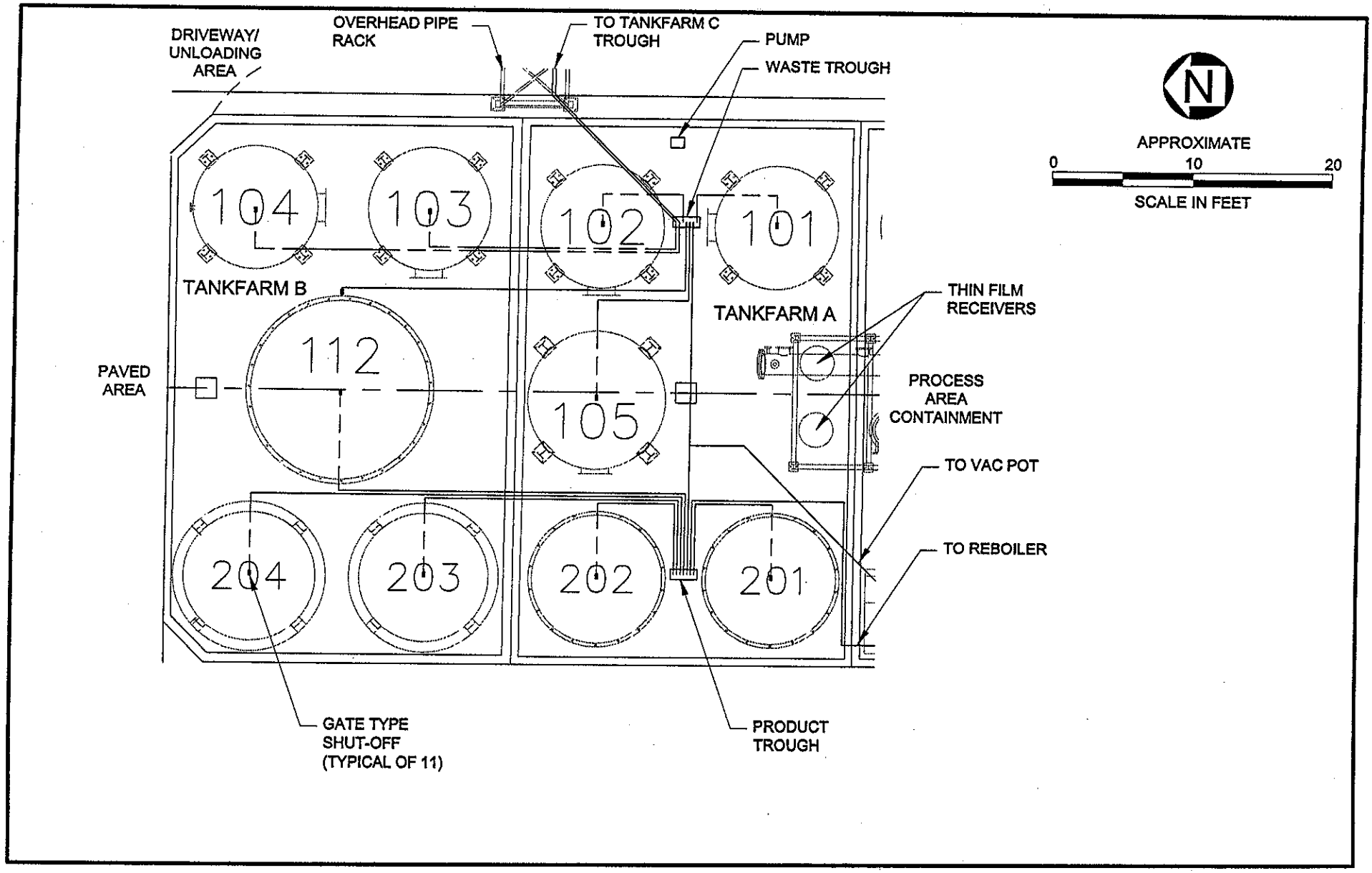

REFERENCE: BASEMAP PROVIDED BY:

ROMIC
ENVIRONMENTAL TECHNOLOGIES CORP.
ROMIC SOUTHWEST, CHANDLER, ARIZONA

URS

Tankfarm A & B

Romic - Southwest
Chandler, Arizona

Figure D-6

P:\ROMIC\CADD\FIGURES\A16453.DWG 02-14-05
XREF: P:\ROMIC\CADD\FIGURES\ROMIC-SITE.DWG

Tank Certification Report

Tank T-113

Prepared for: Romic Environmental Technologies Corp,
6760 West Allison Road
Chandler, AZ 85226

Prepared by: Metro Environmental Services, Inc.
1256-B West Brooks Street
Ontario, CA 91762

INTRODUCTION

On January 26, 2005 in accordance with Title 22 CCR Section 66264.192, "Design and Installation of New Tank Systems and Components", Metro Environmental Services, Inc. performed an assessment of Tank #113, a 15,000-gallon hazardous waste storage tank at the Romic Environmental Technologies Corp facility located at 6760 West Allison Road in Chandler, Arizona. The tank and associated piping system serve to store hazardous waste.

ASSESSMENT ITEMS

Compatibility of Waste Material with Tank Materials of Construction

The waste material contained in this tank is organic and/or aqueous hazardous waste. This material is compatible with the materials of construction of the tank and piping.

Tank / Piping System Details

The 15,000-gallon tank, (Tank #113), is constructed of stainless steel. Please refer to the attached Tank Specification Sheet for tank details.

The piping system for this tank is constructed of carbon steel and stainless steel. All piping appears to have been installed using good engineering and mechanical practices and is supported adequately to prevent against physical damage and excessive stress due to settlement, vibration, expansion, or contraction.

Leak Detection and Spill Prevention Equipment / Instrumentation

The entire tank and piping system is aboveground and is easily accessible. Leak detection will be by visual inspection. Qualified personnel will inspect the entire tank and piping system at least once per day.

Tank Support System

The tank rests directly upon the concrete slab floor. This tank system was installed under the supervision of site personnel.

Tank Secondary Containment System

The tank is located in a containment area that also contains a number of additional hazardous waste storage and processing tanks. Containment has been certified separately by others.

Tank and Piping System Installation Inspection

The tank and piping was inspected for the following installation defects: weld breaks; punctures; cracks; corrosion; damaged fittings; and other structural damage or inadequate construction or installation. No discrepancies were noted.

System Tightness Testing

The system was tested for tightness by filling with product prior to the final inspection. No leakage or signs of previous leakage were evident during the final inspection.

Estimated Remaining Service Life

The tank was installed in 1992. Considering the current age of the system, materials of construction, intended use, and quality of construction, the remaining service life is estimated to be greater than five years. A re-inspection should be performed five years from the date of this inspection.

CERTIFICATION

I hereby certify that the installed tanks and components of the piping system referenced in this report have been properly inspected and are capable of handling the material referenced in this report without the likelihood of release.

I certify under penalty of law that this document was prepared under my direction and supervision in accordance with a system designed to assure that qualified personnel properly gather and evaluate the information submitted. Based on my inquiry of the person or persons who manage the system, or those persons directly responsible for gathering the information, the information submitted is, to the best of my knowledge and belief, true, accurate, and complete. I am aware that there are significant penalties for submitting false information, including the possibility of fine and imprisonment for knowing violations.

REGISTERED PROFESSIONAL ENGINEER
GEORGE ONEY
exp 6/30/05
No. CH004494
CHEMICAL
STATE OF CALIFORNIA

George A. Oney, P.E.
Chemical Engineer
Registration No. CH004494

Project Name: ROMIC SOUTHWEST – Chandler, AZ

Tank I.D.No. TK–113

Location: Tank Farm C

Service: Fuels/ Still Bottoms/ Solvents

Contents: Organic/aqueous

Size: 15,000 gal. S.G.: 1.0–1.4

Fill GPM: 250 Empty GPM: 250

Support: Skirt

Insulation: n/a Agitator: 10 HP

Other: Agitator w/ Baffles Optional

Weight: 6,600± lbs. Empty

181,700± lbs. Full

Temp (°F) AMB.

Pressure (Psig): ATM.

Seismic Zone: 2

Material: Stainless steel

Method of Construction: Welded

CONNECTION

No.	Size	Type	Rating	Function
A	4"	RF	150#	BOTTOM NOZZLE
B	4"	RF	150#	SIDE OUTLET
C	2 1/2"	RF	150#	VENT
D	4"	RF	150#	SPARE
E	12"	RF	150#	LEVEL INDICATOR
M	24"	FF	n/a	TOP MANWAY
S	1"	HC	3000#	SAMPLE PORT

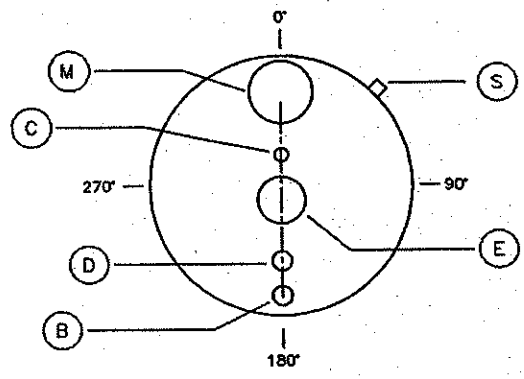

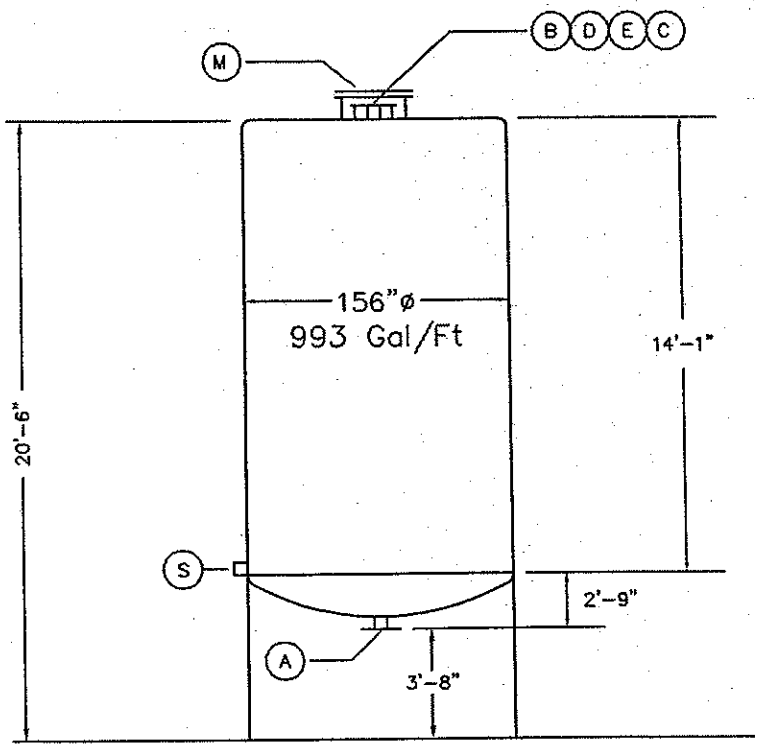

REMARKS

1. Standard Flat top head
2. Flanged and dished bottom
3. Tank supported on ring skirt.
4. See Brown Tank & Steel W/O–3882.

Rev No.	Revision	By	Date	Apprvd	Date
1	Update for 2004 Part B	RP	4–7–04	WK	4–04

ROMIC
ENVIRONMENTAL TECHNOLOGIES CORP.
ROMIC SOUTHWEST, CHANDLER, ARIZONA

Drawing Number Tk 113

METRO ENVIRONMENTAL SERVICES, INC.

1256-B West Brooks Street, Ontario, CA 91762
Tel: (909) 983-3848 Fax: (909) 983-3498

LSI PN: **2K502** Tank 112 and 113 **Issued:** **01/31/05**
Project Name: **Romic Environmental Technologies Corporation**
Project Location: **ROMIC Southwest, Chandler, Arizona.**

Table of Contents: **Page No.**

1	Scope of work, design loads and tank data	1
2	Seismic and wind analysis for overturning moment	2
3	Check anchorage.	3

Registered Professional Engineer (Civil)
CERTIFICATE NO.
31521
WANTHONG
STEVENSON
LIM
Date Signed 7-4-
ARIZONA, U.S.A.

SCOPE OF WORK: **Tank Designation: 112 and 113**

- Analyzed existing anchorage for 13'-0" Diameter by 14'-1" high tank with 6'-5" skirt
- Existing tank skirt w/1/2" thick 3" width bottom ring and (9) 3/4" diameter anchor bolts evenly spaced.
- Check existing anchorage.

DESIGN LOADS:

2000 International Building Code. 90 MPH wind, Seismic Use group II

WIND: F= Qz * G * Cf * Af

Where Qz = 0.00256 Kz Kzt Kd V^2 I

Qz = 0.00256*0.9*1.0*0.95*90^2*1.0 = 17.73 psf

F wnd = 2658 lbs.

M otm = F wind * H otm = 35777 lbs-ft

H =	20.5	ft
D =	13	ft
Kz =	0.9	Tbl 6-3 Case2
Kzt =	1	Tbl 6-4 Flat
Kd =	0.95	Tbl 6-4
V =	90	MPH Fig 6-1
I =	1	Tbl 6-1
For H/D =	1.576923	
Cf =	1.4	Tbl 6-19
Gf =	0.85	Sec 6.5.8
Af =	126	Sq. Ft.
H otm =	13.4583	ft

Location: Chandler State: Arizona

From Fig. 1615(1): Ss = 0.21 g

From Fig. 1615(2): S1 = 0.063 g

Sds = 0.67 Fa Ss = 0.224 W

Siteclass: D

Fa =	1.6	Tbl 1615.1.2(1)
R =	3	Tbl 1622.2.5(1)
Omega =	2	Tbl 1622.2.5(1)
Ie =	1.25	Tbl 1622.2.5(2)
W =	182000	lbs

V seismic = Cs W Eq. 16-34

= 0.093 W

Cs = Sds /R * I = 0.0933

Cs min=0.044SdsI = 0.0123

Use Cs = 0.0933

T = 0.00000765*(L / D)^2 *(wD / t) ^ 0.5 = 0.000000765*(14./13)^2 *(46000/14*13/0.34)^.5

= 0.000314 < 0.06 Rigid Structure

Vsimplified = 1.2 Sds W / R = 0.090 W

Vnonstr = 0.14 Sds Ie = 0.039 W

Cs min nonstr = 0.8S1 I / R = 0.021 W

Vs rigid nonstr = 0.3 Sds I W = 0.084 W

Use Vs = 0.093 W

Vs asd = **0.067 W**

Overturning Moment = Vs W * 1.2 sloshing * H otm = **195952.8** lbs-ft **Seismic Control**

Check existing anchorage according to API 650 Appendix E - Seismic design of Storage Tanks

Given information:

Material:	Carbon steel
Thickness:	0.34"
Concrete slab thickness:	Min 6"
Full Tank +wt tank:	181700 lbs
Agitator:	0 lbs
Misc valves and structures:	300 lbs

Seismic Analysis per API-650 Appendix E

Seismic zone, Z = (Zone 4=0.4,zone 3=0.3,zone 2=0.2,zone 1=0.075)		0.40	
Seismic Importance factor, Is = (Max I = 1.5, **normally I = 1.0**)		1.25	
Site coefficient from soil type, s = (S4=2, **S3=1.5**, S2=1.2, S1=1.0)		1.50	
Spcific gravity of liquid, **G** =		1.4	
Tank diameter, **D** =		9.00	ft
Height of tank, **Ht** =		14.08	ft
Fill height from top of floor, **H** =		20.50	ft
Weight of content, **Wt** =		175.10	kips
Weight of shell, uncorroded,**Ws**= .49*(.34/12*2*22/7*6.5*14)=	7.988347	7.988	kips
Weight of roof steel, uncorroded, **Wr'** = .49*.20/12*2*22/7*4.5=		0.317	kips
Roof equipment load in seismic, **We** =		0.30	kips
Ratio of **D / H** =		0.64	
Weight or roof & equipment load, **Wr** = Wr' + We =		0.62	Kips
Height of center of gravity of shell, **Xs** = H / 2 =		10.25	ft
From Figure E-2 Effective masses, **W1 / Wt** =	*0.890*	0.89	
Contents in unison w/ shell, **W1** = Wt * (W1 / Wt) =		155.80	Kips
From Figure E-2 Effective masses, **W2 / Wt** =	*0.166*	0.17	
First sloshing mode contents, **W2** = Wt * (W2 / Wt) =		29.03	Kips
From Figure E-3 Centroids of seismic forces, **X1 / H** =	*0.438*	0.44	
Height to centroid, **X1** = H * (X1 / H) =		8.99	
From Figure E-3 Centroids of seismic forces, **X2 / H** =	*0.797*	0.80	
Height to centroid, **X2** = H * (X2 / H) =		16.34	
From Figure E-4 Factor k, k =	*0.578*	0.58	
Natural period of first mode, **T** = k * (D)^0.5 =		1.73	seconds
Lateral force coefficient, **C1** = **0.24**		0.24	
Lateral force coefficient, **C2** = **C2 = 0.3S/T =**		0.26	

Base shear **Vs** = Z * I *(C1 * (Ws + Wr + W1) + C2 * W2) =	23.50	Kips
Overturning, **Mot** = Z * I *(C1*Ws*Xs + C1*Wr*Ht + C1*W1*X1 + C2*W2*X2)=	**213.61**	K-ft
Friction resistance from contents,shell, roof steel, **Ffric**=0.4 *(Wt+Ws+Wr') =	73.36	Kips
Factor of safety for sliding, **FSs** = Fric / Vs =	**3.12 > 1.5 OK**	

Calculate resistance load against overturning:

Yield strength of tank material, **Fy** =		36.00	ksi
Thickness of bottom plate, **tb** = max (tf -co), thickness of floor or 0.25 =		6.000	
Wt of contents allow for OT calc. per cicumference,**WL**=7.9 tb(Fby G H)^0.5=		48180.42	plf
Max allowable for WL = 1.25 G H D = 322.875 plf	**Use:**	322.88	plf
Resistance to OT by contents, **Pr** = 22/7 * D * WL =		9.13	Kips
Resistance to OT by shell and roof, **Psr** = Ws + Wr =		8.61	Kips
Total resistance to OT moment, **Mr** = (Pr + Psr) * D / 2 =		79.82	k-ft

Mot > Mr, Anchorage required

Wind analysis per API 650 section 3.11 Wind load on Tanks

Based on 30 psf on vertical plane surface or 22 psf on projected area of cylindrical surface

Wind pressure, **qw** =	22.00	psf
Base shear from wind, **Vw** = qw * Ht * D =	4004.00	Kips
Overturning due to wind, **Motmw** = Vw * 14/2=	53887.03	K-ft

Since Resistance to Overturning of tank <seismic or wind overturning, anchorage req'd.

Check existing (9) 3/4" diameter anchor bolts.

Overturning, Mot = Z * I *(C1*Ws*Xs + C1*Wr*Ht + C1*W1*X1 + C2*W2*X2)=	213.61	k-ft
Base shear Vs = Z * I *(C1 * (Ws + Wr + W1) + C2 * W2) =	23.50	Kips

Consider only four bolts are resisting overturning at one time.

Tension of one bolt = 213.61 / 13 ft / 4 bolts =	4.11	Kips
Shear of one bolt = 23.5 / 9 =	2.61	Kips
Combined stress of tension and shear = (4.11/4.4)^(5/3)+ (2.61/8.4)^(5/3)=	1.03	**< 1.33**
Cap of pullout cone fr each bolt = .55*.65*(22/7*10^2/4)*(3000)^0.5*4/3*3*1	6.15	**Kips O.k.**

Therefore the existing 9' diameter flat bottom tank with (9) 3/4" diameter bolt is still adequate to resist the overturning moment.

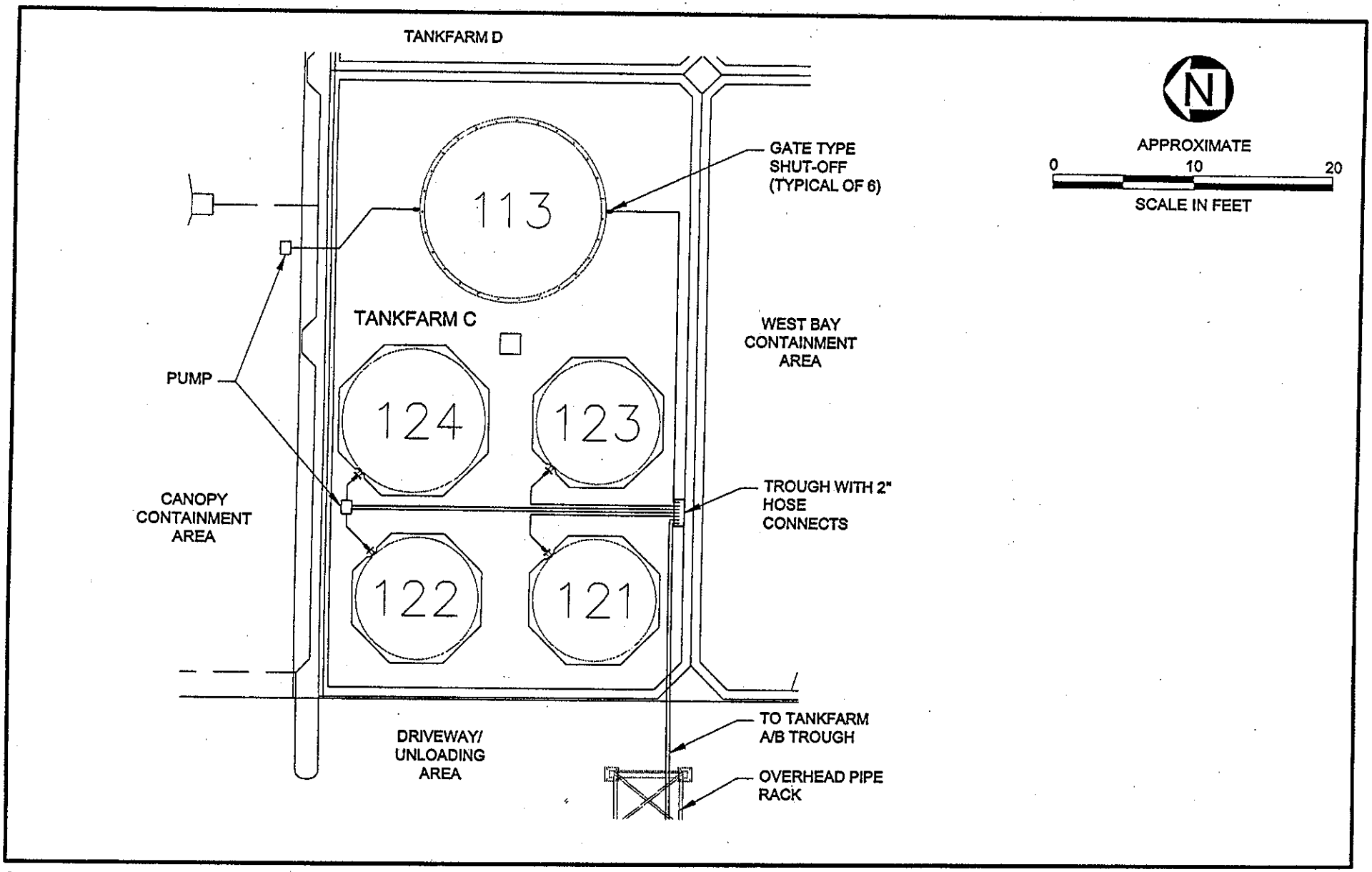

REFERENCE: BASEMAP PROVIDED BY:

ROMIC
ENVIRONMENTAL TECHNOLOGIES CORP.
ROMIC SOUTHWEST, CHANDLER, ARIZONA

URS

Tankfarm C

Romic - Southwest
Chandler, Arizona

Figure D-7

P:\ROMIC\CADD\FIGURES\A16454.DWG 02-14-05
XREF: P:\ROMIC\CADD\FIGURES\ROMIC-SITE.DWG

Tank Certification Report

Tank T-121

Prepared for: Romic Environmental Technologies Corp,
6760 West Allison Road
Chandler, AZ 85226

Prepared by: Metro Environmental Services, Inc.
1256-B West Brooks Street
Ontario, CA 91762

INTRODUCTION

On February 7, 2005 in accordance with Title 22 CCR Section 66264.192, "Design and Installation of New Tank Systems and Components", Metro Environmental Services, Inc. performed an assessment of Tank #121, a 6,500-gallon hazardous waste storage tank at the Romic Environmental Technologies Corp facility located at 6760 West Allison Road in Chandler, Arizona. The tank and associated piping system serve to store hazardous waste.

ASSESSMENT ITEMS

Compatibility of Waste Material with Tank Materials of Construction

The waste material contained in this tank is organic and/or aqueous hazardous waste. This material is compatible with the materials of construction of the tank and piping.

Tank / Piping System Details

The 6,500-gallon tank, (Tank #121), is constructed of carbon steel. Please refer to the attached Tank Specification Sheet for tank details.

The piping system for this tank is constructed of carbon steel. All piping appears to have been installed using good engineering and mechanical practices and is supported adequately to prevent against physical damage and excessive stress due to settlement, vibration, expansion, or contraction.

Leak Detection and Spill Prevention Equipment / Instrumentation

The entire tank and piping system is aboveground and is easily accessible. Leak detection will be by visual inspection. Qualified personnel will inspect the entire tank and piping system at least once per day.

Tank Support System

The tank rests directly upon the concrete slab floor. This tank system was installed under the supervision of site personnel.

Tank Secondary Containment System

The tank is located in a containment area that also contains a number of additional hazardous waste storage and processing tanks. Containment has been certified separately by others.

Tank and Piping System Installation Inspection

The tank and piping was inspected for the following installation defects: weld breaks; punctures; cracks; corrosion; damaged fittings; and other structural damage or inadequate construction or installation. No discrepancies were noted.

System Tightness Testing

The system was tested for tightness by filling with product prior to the final inspection. No leakage or signs of previous leakage were evident during the final inspection.

Estimated Remaining Service Life

The tank was installed in 1992. Considering the current age of the system, materials of construction, intended use, and quality of construction, the remaining service life is estimated to be greater than five years. A re-inspection should be performed five years from the date of this inspection.

CERTIFICATION

I hereby certify that the installed tanks and components of the piping system referenced in this report have been properly inspected and are capable of handling the material referenced in this report without the likelihood of release.

I certify under penalty of law that this document was prepared under my direction and supervision in accordance with a system designed to assure that qualified personnel properly gather and evaluate the information submitted. Based on my inquiry of the person or persons who manage the system, or those persons directly responsible for gathering the information, the information submitted is, to the best of my knowledge and belief, true, accurate, and complete. I am aware that there are significant penalties for submitting false information, including the possibility of fine and imprisonment for knowing violations.

REGISTERED PROFESSIONAL ENGINEER
GEORGE ONEY
exp 6/30/05
No. CH004494
CHEMICAL
STATE OF CALIFORNIA

George A. Oney, P.E.
Chemical Engineer
Registration No. CH004494

INTRODUCTION

On May 27, 2005 in accordance with Title 22 CCR Section 66264.192, "Design and Installation of New Tank Systems and Components", Metro Environmental Services, Inc. performed an assessment of the anchorage system for Tank #121, a 6,500-gallon hazardous waste storage tank at the Romic Environmental Technologies Corp facility located at 6760 West Allison Road in Chandler, Arizona. The tank and associated piping system serve to store hazardous waste.

ASSESSMENT ITEMS

Tank Anchorage System Installation Inspection

The tank anchorage system was inspected for the following installation defects: weld breaks; punctures; cracks; corrosion; damaged fittings; and other structural damage or inadequate installation. No discrepancies were noted.

CERTIFICATION

I hereby certify that the installed tanks and components of the piping system referenced in this report have been properly inspected and are capable of handling the material referenced in this report without the likelihood of release.

I certify under penalty of law that this document was prepared under my direction and supervision in accordance with a system designed to assure that qualified personnel properly gather and evaluate the information submitted. Based on my inquiry of the person or persons who manage the system, or those persons directly responsible for gathering the information, the information submitted is, to the best of my knowledge and belief, true, accurate, and complete. I am aware that there are significant penalties for submitting false information, including the possibility of fine and imprisonment for knowing violations.

REGISTERED PROFESSIONAL ENGINEER
GEORGE ONEY
exp 6/30/07
No. CH004494
CHEMICAL
STATE OF CALIFORNIA

George A. Oney, P.E.
Chemical Engineer
Registration No. CH004494

Tank Certification Report

Tank T-122

Prepared for: Romic Environmental Technologies Corp,
6760 West Allison Road
Chandler, AZ 85226

Prepared by: Metro Environmental Services, Inc.
1256-B West Brooks Street
Ontario, CA 91762

INTRODUCTION

On May 27, 2005 in accordance with Title 22 CCR Section 66264.192, "Design and Installation of New Tank Systems and Components", Metro Environmental Services, Inc. performed an assessment of Tank #122, a 6,500-gallon hazardous waste storage tank at the Romic Environmental Technologies Corp facility located at 6760 West Allison Road in Chandler, Arizona. The tank and associated piping system serve to store hazardous waste.

ASSESSMENT ITEMS

Compatibility of Waste Material with Tank Materials of Construction

The waste material contained in this tank is organic and/or aqueous hazardous waste. This material is compatible with the materials of construction of the tank and piping.

Tank / Piping System Details

The 6,500-gallon tank, (Tank #122), is constructed of carbon steel. Please refer to the attached Tank Specification Sheet for tank details.

The piping system for this tank is constructed of carbon steel. All piping appears to have been installed using good engineering and mechanical practices and is supported adequately to prevent against physical damage and excessive stress due to settlement, vibration, expansion, or contraction.

Leak Detection and Spill Prevention Equipment / Instrumentation

The entire tank and piping system is aboveground and is easily accessible. Leak detection will be by visual inspection. Qualified personnel will inspect the entire tank and piping system at least once per day.

Tank Support System

The tank rests directly upon the concrete slab floor. This tank system was installed under the supervision of site personnel.

Tank Secondary Containment System

The tank is located in a containment area that also contains a number of additional hazardous waste storage and processing tanks. Containment has been certified separately by others.

Tank and Piping System Installation Inspection

The tank and piping was inspected for the following installation defects: weld breaks; punctures; cracks; corrosion; damaged fittings; and other structural damage or inadequate construction or installation. No discrepancies were noted.

System Tightness Testing

The system was tested for tightness by filling with product prior to the final inspection. No leakage or signs of previous leakage were evident during the final inspection.

Estimated Remaining Service Life

The tank was installed in 1992. Considering the current age of the system, materials of construction, intended use, and quality of construction, the remaining service life is estimated to be greater than five years. A re-inspection should be performed five years from the date of this inspection.

CERTIFICATION

I hereby certify that the installed tanks and components of the piping system referenced in this report have been properly inspected and are capable of handling the material referenced in this report without the likelihood of release.

I certify under penalty of law that this document was prepared under my direction and supervision in accordance with a system designed to assure that qualified personnel properly gather and evaluate the information submitted. Based on my inquiry of the person or persons who manage the system, or those persons directly responsible for gathering the information, the information submitted is, to the best of my knowledge and belief, true, accurate, and complete. I am aware that there are significant penalties for submitting false information, including the possibility of fine and imprisonment for knowing violations.

REGISTERED PROFESSIONAL ENGINEER
GEORGE ONEY
exp 6/30/05
No. CH004494
CHEMICAL
STATE OF CALIFORNIA

George A. Oney, P.E.
Chemical Engineer
Registration No. CH004494

INTRODUCTION

On May 27, 2005 in accordance with Title 22 CCR Section 66264.192, "Design and Installation of New Tank Systems and Components", Metro Environmental Services, Inc. performed an assessment of the anchorage system for Tank #122, a 6,500-gallon hazardous waste storage tank at the Romic Environmental Technologies Corp facility located at 6760 West Allison Road in Chandler, Arizona. The tank and associated piping system serve to store hazardous waste.

ASSESSMENT ITEMS

Tank Anchorage System Installation Inspection

The tank anchorage system was inspected for the following installation defects: weld breaks; punctures; cracks; corrosion; damaged fittings; and other structural damage or inadequate installation. No discrepancies were noted.

CERTIFICATION

I hereby certify that the installed tanks and components of the piping system referenced in this report have been properly inspected and are capable of handling the material referenced in this report without the likelihood of release.

I certify under penalty of law that this document was prepared under my direction and supervision in accordance with a system designed to assure that qualified personnel properly gather and evaluate the information submitted. Based on my inquiry of the person or persons who manage the system, or those persons directly responsible for gathering the information, the information submitted is, to the best of my knowledge and belief, true, accurate, and complete. I am aware that there are significant penalties for submitting false information, including the possibility of fine and imprisonment for knowing violations.

REGISTERED PROFESSIONAL ENGINEER
GEORGE ONEY
exp 6/30/07
No. CH004494
CHEMICAL
STATE OF CALIFORNIA

George A. Oney, P.E.
Chemical Engineer
Registration No. CH004494

Tank Certification Report

Tank T-123

Prepared for: Romic Environmental Technologies Corp,
6760 West Allison Road
Chandler, AZ 85226

Prepared by: Metro Environmental Services, Inc.
1256-B West Brooks Street
Ontario, CA 91762

INTRODUCTION

On February 2, 2005 in accordance with Title 22 CCR Section 66264.192, "Design and Installation of New Tank Systems and Components", Metro Environmental Services, Inc. performed an assessment of Tank #123, a 6,500-gallon hazardous waste storage tank at the Romic Environmental Technologies Corp facility located at 6760 West Allison Road in Chandler, Arizona. The tank and associated piping system serve to store hazardous waste.

ASSESSMENT ITEMS

Compatibility of Waste Material with Tank Materials of Construction

The waste material contained in this tank is organic and/or aqueous hazardous waste. This material is compatible with the materials of construction of the tank and piping.

Tank / Piping System Details

The 6,500-gallon tank, (Tank #123), is constructed of carbon steel. Please refer to the attached Tank Specification Sheet for tank details.

The piping system for this tank is constructed of carbon steel. All piping appears to have been installed using good engineering and mechanical practices and is supported adequately to prevent against physical damage and excessive stress due to settlement, vibration, expansion, or contraction.

Leak Detection and Spill Prevention Equipment / Instrumentation

The entire tank and piping system is aboveground and is easily accessible. Leak detection will be by visual inspection. Qualified personnel will inspect the entire tank and piping system at least once per day.

Tank Support System

The tank rests directly upon the concrete slab floor. This tank system was installed under the supervision of site personnel.

Tank Secondary Containment System

The tank is located in a containment area that also contains a number of additional hazardous waste storage and processing tanks. Containment has been certified separately by others.

Tank and Piping System Installation Inspection

The tank and piping was inspected for the following installation defects: weld breaks; punctures; cracks; corrosion; damaged fittings; and other structural damage or inadequate construction or installation. No discrepancies were noted.

System Tightness Testing

The system was tested for tightness by filling with product prior to the final inspection. No leakage or signs of previous leakage were evident during the final inspection.

Estimated Remaining Service Life

The tank was installed in 1992. Considering the current age of the system, materials of construction, intended use, and quality of construction, the remaining service life is estimated to be greater than five years. A re-inspection should be performed five years from the date of this inspection.

CERTIFICATION

I hereby certify that the installed tanks and components of the piping system referenced in this report have been properly inspected and are capable of handling the material referenced in this report without the likelihood of release.

I certify under penalty of law that this document was prepared under my direction and supervision in accordance with a system designed to assure that qualified personnel properly gather and evaluate the information submitted. Based on my inquiry of the person or persons who manage the system, or those persons directly responsible for gathering the information, the information submitted is, to the best of my knowledge and belief, true, accurate, and complete. I am aware that there are significant penalties for submitting false information, including the possibility of fine and imprisonment for knowing violations.

REGISTERED PROFESSIONAL ENGINEER
GEORGE ONEY
exp 6/30/05
No. CH004494
CHEMICAL
STATE OF CALIFORNIA

George A. Oney, P.E.
Chemical Engineer
Registration No. CH004494

INTRODUCTION

On May 27, 2005 in accordance with Title 22 CCR Section 66264.192, "Design and Installation of New Tank Systems and Components", Metro Environmental Services, Inc. performed an assessment of the anchorage system for Tank #123, a 6,500-gallon hazardous waste storage tank at the Romic Environmental Technologies Corp facility located at 6760 West Allison Road in Chandler, Arizona. The tank and associated piping system serve to store hazardous waste.

ASSESSMENT ITEMS

Tank Anchorage System Installation Inspection

The tank anchorage system was inspected for the following installation defects: weld breaks; punctures; cracks; corrosion; damaged fittings; and other structural damage or inadequate installation. No discrepancies were noted.

CERTIFICATION

I hereby certify that the installed tanks and components of the piping system referenced in this report have been properly inspected and are capable of handling the material referenced in this report without the likelihood of release.

I certify under penalty of law that this document was prepared under my direction and supervision in accordance with a system designed to assure that qualified personnel properly gather and evaluate the information submitted. Based on my inquiry of the person or persons who manage the system, or those persons directly responsible for gathering the information, the information submitted is, to the best of my knowledge and belief, true, accurate, and complete. I am aware that there are significant penalties for submitting false information, including the possibility of fine and imprisonment for knowing violations.

REGISTERED PROFESSIONAL ENGINEER
GEORGE ONEY
exp 6/30/06
No. CH004494
CHEMICAL
STATE OF CALIFORNIA

George A. Oney, P.E.
Chemical Engineer
Registration No. CH004494

Project Name: ROMIC SOUTHWEST – Chandler, AZ

Tank I.D.No. TK–121 to TK–123

Location: Tank Farm C

Service: Waste Storage

Contents: Organic/aqueous

Size: 6,500 gal. S.G.: 1.0–1.4

Fill GPM: 250 Empty GPM: 250

Support: Flat Bottom

Insulation: n/a Agitator: n/a

Weight: 4,000± lbs. Empty

80,000± lbs. Full

Temp (°F) AMB.

Pressure (Psig): ATM.

Seismic Zone: 2

Material: Carbon Steel

Method of Construction: Welded

CONNECTION

No.	Size	Type	Rating	Function
A	4"	RF	150#	BOTTOM NOZZLE
B	4"	RF	150#	SIDE OUTLET
C	2 1/2"	RF	150#	VENT
D	4"	RF	150#	SPARE
E	12"	RF	150#	LEVEL INDICATOR
M	24"	FF	n/a	TOP MANWAY
S	1"	HC	3000#	SAMPLE PORT

REMARKS

1. Standard cone top
2. Flat bottom

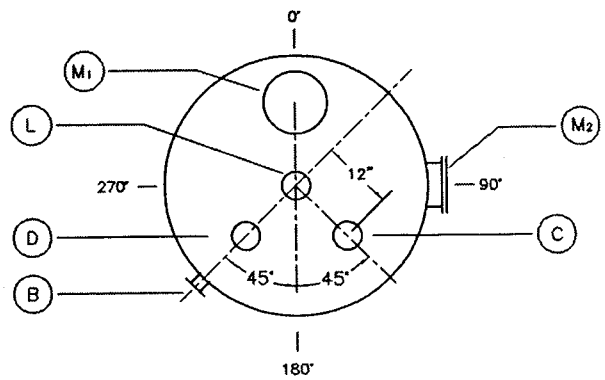

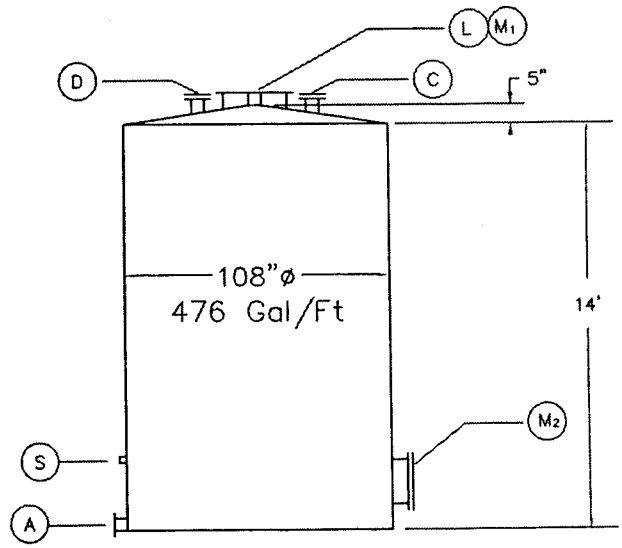

Rev No.	Revision	By	Date	Apprvd	Date
1	Update for 2004 Part B	RP	4–7–04	WK	4–04

ROMIC
ENVIRONMENTAL TECHNOLOGIES CORP.
ROMIC SOUTHWEST, CHANDLER, ARIZONA

Drawing Number TK–121 to TK–123

METRO ENVIRONMENTAL SERVICES, INC.

1256-B West Brooks Street, Ontario, CA 91762
Tel: (909) 983-3848 Fax: (909) 983-3498

LSI PN: **2K502** Tank 121, 122 and 123 **Issued:** **01/31/05**
Project Name: **Romic Environmental Technologies Corporation**
Project Location: **ROMIC Southwest, Chandler, Arizona.**

Table of Contents:

		Page No.
1	Scope of work, design loads and tank data	1
2	Seismic and wind analysis for overturning moment	2
3	Check existing anchorage	3

Registered Professional Engineer (Civil)
CERTIFICATE NO
31521
WANTHONG
STEVENSON
LIM
Date Signed 1/2/4/05
ARIZONA U.S.A.

SCOPE OF WORK: **Tank Designation:** Tank 121, 122 and 123

- Analyzed existing anchorage for 9' Diameter by 14" high tank flat bottom tank
- Existing tank with (4)L4x4x3/8, each with (1) 3/4" diameter anchor bolt
- Check existing anchorage.

DESIGN LOADS:

2000 International Building Code. 80 MPH wind, Seismic Use group II

WIND: F= Qz * G * Cf * Af

Where Qz = 0.00256 Kz Kzt Kd V^2 I

Qz = 0.00256*0.9*1.0*0.95*90^2*1.0 = 17.73 psf

F wnd = 2743 lbs.

M otm = F wind * H otm = 19199 lbs-ft

H =	14.5	ft
D =	9	ft
Kz =	0.9	Tbl 6-3 Case2
Kzt =	1	Tbl 6-4 Flat
Kd =	0.95	Tbl 6-4
V =	90	MPH Fig 6-1
I =	1	Tbl 6-1
For H/D =	1.61	
Cf =	1.4	Tbl 6-19
Gf =	0.85	Sec 6.5.8
Af =	130	Sq. Ft.
H otm =	7	ft

Location: Chandler State: Arizona

From Fig. 1615(1): Ss = 0.21 g

From Fig. 1615(2): S1 = 0.063 g

Sds = 0.67 Fa Ss = 0.224 W

Siteclass: D

Fa =	1.6	Tbl 1615.1.2(1)
R =	3	Tbl 1622.2.5(1)
Omega =	2	Tbl 1622.2.5(1)
Ie =	1.25	Tbl 1622.2.5(2)
W =	81000	lbs

V seismic = Cs W Eq. 16-34

= 0.093 W

Cs = Sds /R * I = 0.0933

Cs min=0.044SdsI = 0.0123

Use Cs = 0.0933

T = 0.00000765*(L / D)^2 *(wD / t) ^ 0.5 = 0.000000765*(14./9)^2 *(46000/14*9/0.34)^.5

= 0.000546 < 0.06 Rigid Structure

Vsimplified = 1.2 Sds W / R = 0.090 W

Vnonstr = 0.14 Sds Ie = 0.039 W

Cs min nonstr = 0.8S1 I / R = 0.021 W

Vs rigid nonstr = 0.3 Sds I W = 0.084 W

Use Vs = 0.093 W

Vs asd = **0.067 W**

Overturning Moment = Vs W * 1.2 sloshing * H otm = **45360** lbs-ft **Seismic Control**

Check existing anchorage according to API 650 Appendix E - Seismic design of Storage Tanks

Given information:

Material:	Carbon steel
Thickness:	0.34"
Concrete slab thickness:	Min 6"
Full Tank +wt tank:	80000 lbs
Agitator:	0 lbs
Misc valves and structures:	1000 lbs

Seismic Analysis per API-650 Appendix E

Seismic zone, Z = (Zone 4=0.4,zone 3=0.3,zone 2=0.2,zone 1=0.075)		0.40	
Seismic Importance factor, Is = (Max I = 1.5, **normally I = 1.0**)		1.25	
Site coefficient from soil type, s = (S4=2, **S3=1.5**, S2=1.2, S1=1.0)		1.50	
Spcific gravity of liquid, **G** =		1.4	
Tank diameter, **D** =		9.00	ft
Height of tank, **Ht** =		14.00	ft
Fill height from top of floor, **H** =		14.00	ft
Weight of content, **Wt** =		80.00	kips
Weight of shell, uncorroded,**Ws**= .49*(.34/12*2*22/7*4.5*14)=	5.4978	5.498	kips
Weight of roof steel, uncorroded, **Wr'** = .49*.20/12*2*22/7*4.5=		0.256	kips
Roof equipment load in seismic, **We** =		1.00	kips
Ratio of **D / H** =		0.64	
Weight or roof & equipment load, **Wr** = Wr' + We =		1.26	Kips
Height of center of gravity of shell, **Xs** = H / 2 =		7.00	ft
From Figure E-2 Effective masses, **W1 / Wt** =	*0.889*	0.89	
Contents in unison w/ shell, **W1** = Wt * (W1 / Wt) =		71.12	Kips
From Figure E-2 Effective masses, **W2 / Wt** =	*0.167*	0.17	
First sloshing mode contents, **W2** = Wt * (W2 / Wt) =		13.33	Kips
From Figure E-3 Centroids of seismic forces, **X1 / H** =	*0.438*	0.44	
Height to centroid, **X1** = H * (X1 / H) =		6.13	
From Figure E-3 Centroids of seismic forces, **X2 / H** =	*0.796*	0.80	
Height to centroid, **X2** = H * (X2 / H) =		11.14	
From Figure E-4 Factor k, k =	*0.578*	0.58	
Natural period of first mode, **T** = k * (D)^0.5 =		1.73	seconds
Lateral force coefficient, **C1** = **0.24**		0.24	
Lateral force coefficient, **C2** = **C2 = 0.3S/T =**		0.26	

Base shear **Vs** = Z * I *(C1 * (Ws + Wr + W1) + C2 * W2) =	11.08 Kips
Overturning, **Mot** = Z * I *(C1*Ws*Xs + C1*Wr*Ht + C1*W1*X1 + C2*W2*X2)=	**75.22** K-ft
Friction resistance from contents,shell, roof steel, **Ffric**=0.4 *(Wt+Ws+Wr') =	34.30 Kips
Factor of safety for sliding, **FSs** = Fric / Vs =	**3.10 > 1.5 OK**

Calculate resistance load against overturning:

Yield strength of tank material, **Fy** =		36.00	ksi
Thickness of bottom plate, **tb** = max (tf -co), thickness of floor or 0.25 =		6.00	
Wt of contents allow for OT calc. per cicumference,**WL**=7.9 tb(Fby G H)^0.5=		39816.00	plf
Max allowable for WL = 1.25 G H D = 220.5 plf	**Use:**	220.50	plf
Resistance to OT by contents, **Pr** = 22/7 * D * WL =		6.24	Kips
Resistance to OT by shell and roof, **Psr** = Ws + Wr =		6.75	Kips
Total resistance to OT moment, **Mr** = (Pr + Psr) * D / 2 =		58.46	k-ft

Mot > Mr, Anchorage required

Wind analysis per API 650 section 3.11 Wind load on Tanks

Based on 30 psf on vertical plane surface or 22 psf on projected area of cylindrical surface

Wind pressure, **qw** =	22.00	psf
Base shear from wind, **Vw** = qw * Ht * D =	2.77	Kips
Overturning due to wind, **Motmw** = Vw * 14/2=	19.40	K-ft

Since Resistance to Overturning of tank <seismic or wind overturning, anchorage req'd.

Check existing anchor bolts.

Overturning, Mot = Z * I *(C1*Ws*Xs + C1*Wr*Ht + C1*W1*X1 + C2*W2*X2)= 75.22 k-ft
Base shear Vs = Z * I *(C1 * (Ws + Wr + W1) + C2 * W2) = 11.08 Kips

Consider only two bolts are resisting overturning at one time.
Tension of one bolt = 75.22 / 9 ft / 2 bolts = 4.18 Kips
Shear of one bolt = 11.08 / 4 = 2.77 Kips
Combined stress of tension and shear = (2.77/4.4)^(5/3)+ (4.18/8.4)^(5/3)= 0.77 **< 1.33**

Cap of pullout cone fr each bolt = .55*.65*(22/7*10^2/4)*(3000)^0.5*4/3*3*1 6.15 **Kips O.k.**

Check min t clip = (6*4.18*2*.75/(4*.75*36))^.5 = 0.590 > 3/8"

Therefore the existing L4x4x3/8 clip thickness is inadequate.

Use: **New (4) L4x4x5/8 w/ 3/4" diameter Kwik Bolt II expansion anchors**
Min 4.75" embedment length **ICBO ES# 4627**
1/4" fillet weld, 3.5" length on both sides of L4x4x5/8 to existing tank.

Cap of weld = .928*4*3.5*2 = 25.984 Kips > 4.15

Kwik Bolt II Expansion Anchor

4.3.3.1 PRODUCT DESCRIPTION

The Kwik Bolt II is a stud type expansion anchor with a single piece wedge that performs as three independent wedges if necessary to provide consistent performance in a wide variety of medium-duty applications. Applicable base materials include concrete, lightweight concrete and grout-filled block.

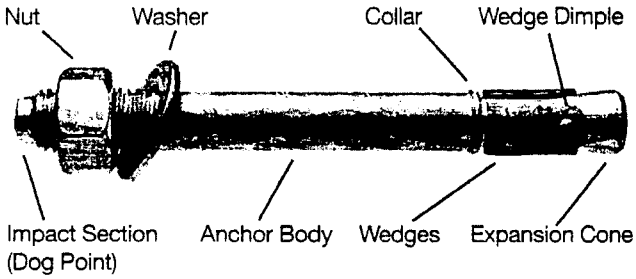

Product Features

- Impact section (Dog Point) prevents thread damage during installation
- Independent 3-piece wedge with dimples help prevent anchor from spinning during installation
- Length identification code facilitates quality control & inspection after installation
- Anchor size is same as drill bit size for easy installation
- Comprehensive performance testing to provide high & consistent performance in concrete, light-weight concrete & grout filled block base materials
- Mechanical expansion allows immediate load application
- Can be installed in bottomless hole, which allows the anchor to be driven flush with the surface after use. Eliminates cutting bolt heads.
- Can be installed through the fixture, improving productivity
- Comprehensive product offering includes many head styles, sizes, carbon steel and stainless steel materials for a variety of applications

Guide Specifications

Expansion Anchors	Expansion anchors shall be stud type with a single piece three section wedge and zinc plated in accordance with ASTM B633. The anchors must meet the description in Federal Specification FF-S-325, Group II, Type 4, Class I for concrete expansion anchors. Anchors shall be Hilti Kwik Bolt II as supplied by Hilti, Inc., P.O. Box 21148, Tulsa, OK 74121.
Installation	Anchors to be installed in holes drilled with Hilti carbide tipped drill bits or matched tolerance diamond core bits. Anchors shall be installed per manufacturer's recommendations.

Listings/Approvals

- Underwriters Laboratory No. 203 "Pipe Hangers" (3/8"-3/4" diameters)
- International Conference of Building Officials (ICBO ES): Evaluation Report No. 4627, KB II
- International Conference of Building Officials (ICBO ES): Evaluation Report No. 5224, HCKB
- Southern Building Code Congress (SBCCI): Report No. 9930
- City of Los Angeles (COLA): Research Report No. 24946
- Conforms to the description in Federal Specification FF-S-325, Group II, Type 4, Class 1
- Factory Mutual (FM) KB II 3/8" x 2 1/4" w/Rod Coupler
- Metro-Dade County Approval 98-0901.13

4.3.3.2 MATERIAL SPECIFICATIONS

	MECHANICAL PROPERTIES	
	f_y ksi (MPa)	min. f_u ksi (MPa)
Carbon Steel KB II studs conform to ASTM A510 with chemical composition of AISI 1038 except countersunk KB II, KB 3/4" x 12", KB II 1" x 6", KB II 1" x 9" and KB II 1" x 12" which conform to ASTM A108 with chemical composition of AISI 11L41	41 (282) 75 (517)	75 (517) 90 (620)
Wedges are manufactured from AISI 1010 carbon steel, except KB II 3/4" x 12", KB II 1" x 6", KB II 1" x 9" and KB II 1" x 12" wedges which conform to chemical composition of AISI 304	N/A	N/A
Nuts are carbon steel conforming to ASTM A563 Grade A and meet dimensional requirements of ANSI B18.2.2	N/A	N/A
Washers are carbon steel conforming to SAE 1005-1033 and meet dimensional requirements of ANSI 18.22.1 Type A Plain	N/A	N/A
All carbon steel parts are zinc plated in accordance with ASTM B633, Type III Fe/Zn 5	N/A	N/A
Stainless Steel KB II studs conform to ASTM A276 or ASTM A493 with chemical composition of either AISI 304 or 316 1/4" thru 9/16" over 9/16"	76 (524) 64 (441)	90 (620) 76 (524)
Stainless steel wedges are of the same material grade as bolts or superior.		
Nuts are stainless steel conforming to ASTM F594 with chemical composition of either AISI 304 or 316 and meeting dimensional requirements of ANSI B18.2.2 to conform with stud material		
Washers are AISI 304 or 316 stainless steel conforming to ASTM A240 to conform with stud material		

***Note:** Special Order KB II's, nuts and washers may vary from standard materials.*

Kwik Bolt II Expansion Anchor

Carbon Steel Kwik Bolt II Allowable Loads in Concrete

Anchor Diameter in. (mm)	Embedment Depth in. (mm)	2000 psi (13.8 MPa)		3000 psi (20.7 MPa)		4000 psi (27.6 MPa)		6000 psi (41.4 MPa)	
		Tension lb (kN)	Shear lb (kN)	Tension lb (kN)	Shear lb (kN)	Tension lb (kN)	Shear lb (kN)	Tension lb (kN)	Shear lb (kN)
1/4 (6.4)	1 1/8 (29)	270 (1.2)	430 (1.9)	330 (1.5)	430 (1.9)	380 (1.7)	430 (1.9)	470 (2.1)	430 (1.9)
	2* (51)	560 (2.5)	530 (2.4)	590 (2.6)	530 (2.4)	630 (2.8)	530 (2.4)	670 (3.0)	530 (2.4)
	3 3/4* (95)	670 (3.0)		670 (3.0)		670 (3.0)			
3/8 (9.5)	1 5/8 (41)	530 (2.4)	990 (4.4)	650 (2.9)	1040 (4.6)	750 (3.3)	1100 (4.9)	850 (3.8)	1100 (4.9)
	2 1/2* (64)	1200 (5.3)	1470 (6.5)	1290 (5.7)	1470 (6.5)	1370 (6.1)	1470 (6.5)	1550 (6.9)	1470 (6.5)
	4 1/4* (108)	1330 (5.9)		1390 (6.2)		1440 (6.4)			
1/2 (12.7)	2 1/4 (57)	1170 (5.2)	1940 (8.6)	1310 (5.8)	1970 (8.8)	1450 (6.4)	1970 (8.8)	1730 (7.7)	1970 (8.8)
	3 1/2* (89)	1870 (8.3)	2450 (10.9)	2130 (9.5)	2450 (10.9)	2400 (10.7)	2450 (10.9)	2800 (12.5)	2450 (10.9)
	6* (152)	2080 (9.3)		2310 (10.3)		2530 (11.3)			
5/8 (15.9)	2 3/4 (70)	1600 (7.1)	3070 (13.7)	1870 (8.3)	3070 (13.7)	2130 (9.5)	3070 (13.7)	2670 (11.9)	3070 (13.7)
	4** (102)	2400 (10.7)	3840 (17.1)	2850 (12.7)	3840 (17.1)	3290 (14.6)	3840 (17.1)	4190 (18.6)	3840 (17.1)
	7** (178)	3200 (14.2)		3470 (15.4)		3730 (16.6)			
3/4 (19.1)	3 1/4 (83)	1970 (8.8)	4140 (18.4)	2320 (10.3)	4140 (18.4)	2670 (11.9)	4140 (18.4)	3200 (14.2)	4140 (18.4)
	4 3/4** (121)	2930 (13.0)	5120 (22.8)	4130 (18.4)	5120 (22.8)	4800 (21.4)	5120 (22.8)	5870 (26.1)	5120 (22.8)
	8** (203)	4000 (17.8)		4930 (21.9)		5870 (26.1)		6320 (28.1)	
1 (25.4)	4 1/2 (114)	3330 (14.8)	7070 (31.4)	4050 (18.0)	7600 (33.8)	4670 (20.8)	8140 (36.2)	5070 (22.6)	9200 (40.9)
	6 (152)	4930 (21.9)	9200 (40.9)	6000 (26.7)	9200 (40.9)	7070 (31.4)	9200 (40.9)	8400 (37.4)	
	9 (229)	6670 (29.7)		7670 (34.1)		8670 (38.6)		10670 (47.5)	

* Values shown are for a shear plane acting through the anchor bolt body. When the shear plane is acting through the anchor bolt threads, reduce the shear values by 20%.

Shear Through The Threads

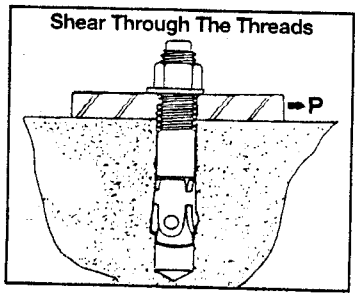

** Values shown are for a shear plane acting through the anchor bolt body. When the shear plane is acting through the anchor bolt threads, reduce the shear value by 12%.

Shear Through The Bolt Body

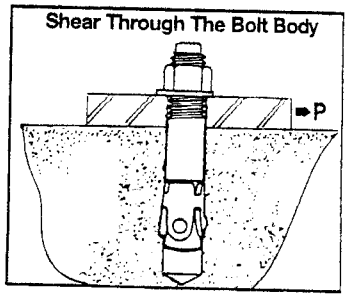

All other values shown are for shear plane acting through either body or threads.

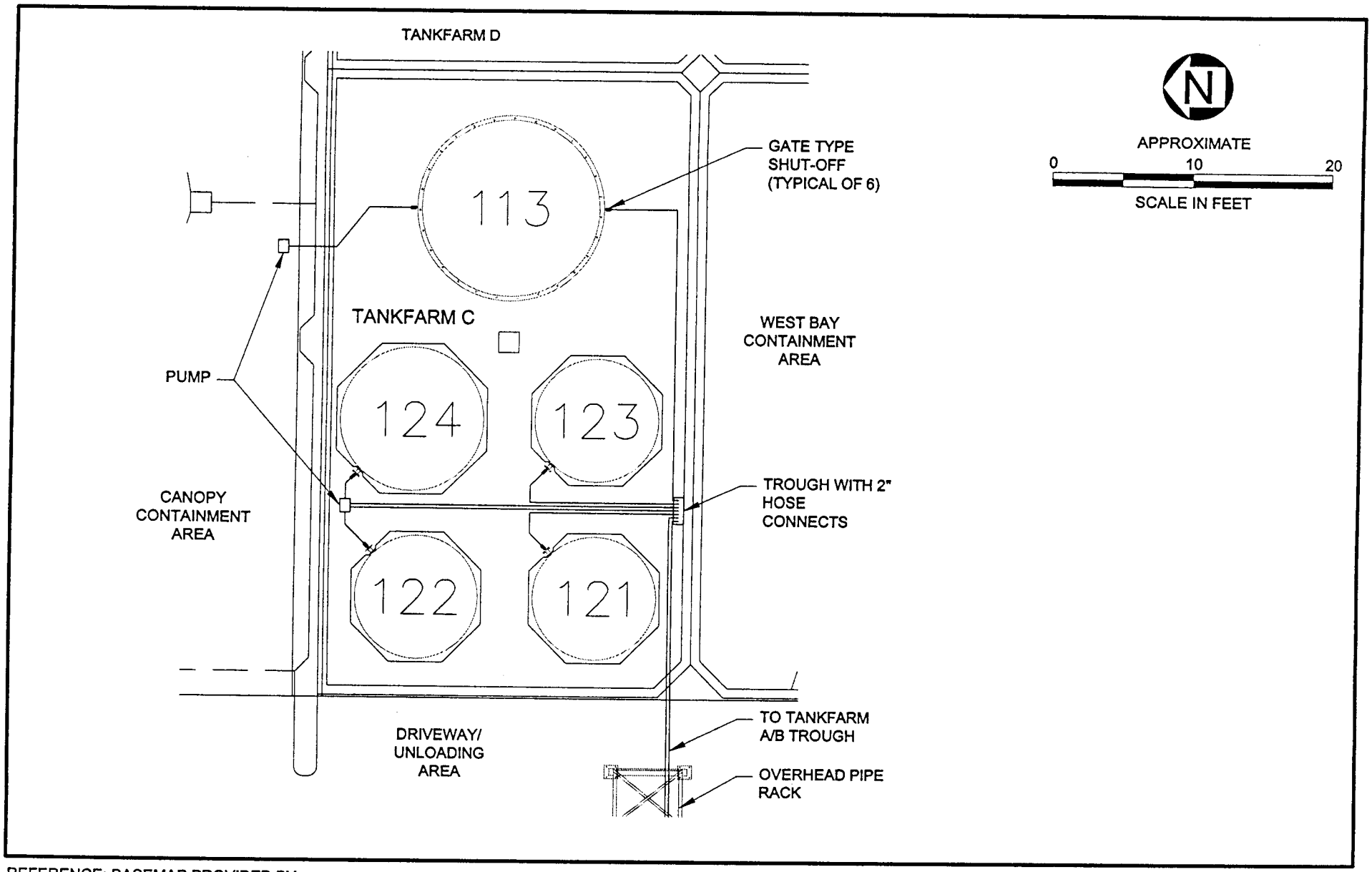

REFERENCE: BASEMAP PROVIDED BY:

ROMIC
ENVIRONMENTAL TECHNOLOGIES CORP.
ROMIC SOUTHWEST, CHANDLER, ARIZONA

URS

P:\ROMIC\CADD\FIGURES\A16454.DWG 02-14-05
XREF: P:\ROMIC\CADD\FIGURES\ROMIC-SITE.DWG

Tankfarm C

Romic - Southwest
Chandler, Arizona

Figure D-7

Tank Certification Report

Tank T-124

Prepared for: Romic Environmental Technologies Corp,
6760 West Allison Road
Chandler, AZ 85226

Prepared by: Metro Environmental Services, Inc.
1256-B West Brooks Street
Ontario, CA 91762

INTRODUCTION

On January 26, 2005 in accordance with Title 22 CCR Section 66264.192, "Design and Installation of New Tank Systems and Components", Metro Environmental Services, Inc. performed an assessment of Tank #124, a 9,000-gallon hazardous waste storage tank at the Romic Environmental Technologies Corp facility located at 6760 West Allison Road in Chandler, Arizona. The tank and associated piping system serve to store hazardous waste.

ASSESSMENT ITEMS

Compatibility of Waste Material with Tank Materials of Construction

The waste material contained in this tank is organic and/or aqueous hazardous waste. This material is compatible with the materials of construction of the tank and piping.

Tank / Piping System Details

The 9,000-gallon tank, (Tank #124), is constructed of carbon steel. Please refer to the attached Tank Specification Sheet for tank details.

The piping system for this tank is constructed of carbon steel. All piping appears to have been installed using good engineering and mechanical practices and is supported adequately to prevent against physical damage and excessive stress due to settlement, vibration, expansion, or contraction.

Leak Detection and Spill Prevention Equipment / Instrumentation

The entire tank and piping system is aboveground and is easily accessible. Leak detection will be by visual inspection. Qualified personnel will inspect the entire tank and piping system at least once per day.

Tank Support System

The tank rests directly upon the concrete slab floor. This tank system was installed under the supervision of site personnel.

Tank Secondary Containment System

The tank is located in a containment area that also contains a number of additional hazardous waste storage and processing tanks. Containment has been certified separately by others.

Tank and Piping System Installation Inspection

The tank and piping was inspected for the following installation defects: weld breaks; punctures; cracks; corrosion; damaged fittings; and other structural damage or inadequate construction or installation. No discrepancies were noted.

System Tightness Testing

The system was tested for tightness by filling with product prior to the final inspection. No leakage or signs of previous leakage were evident during the final inspection.

Estimated Remaining Service Life

The tank was installed in 1992. Considering the current age of the system, materials of construction, intended use, and quality of construction, the remaining service life is estimated to be greater than five years. A re-inspection should be performed five years from the date of this inspection.

CERTIFICATION

I hereby certify that the installed tanks and components of the piping system referenced in this report have been properly inspected and are capable of handling the material referenced in this report without the likelihood of release.

I certify under penalty of law that this document was prepared under my direction and supervision in accordance with a system designed to assure that qualified personnel properly gather and evaluate the information submitted. Based on my inquiry of the person or persons who manage the system, or those persons directly responsible for gathering the information, the information submitted is, to the best of my knowledge and belief, true, accurate, and complete. I am aware that there are significant penalties for submitting false information, including the possibility of fine and imprisonment for knowing violations.

REGISTERED PROFESSIONAL ENGINEER
GEORGE ONEY
exp 6/30/05
No. CH004494
CHEMICAL
STATE OF CALIFORNIA

George A. Oney, P.E.
Chemical Engineer
Registration No. CH004494

INTRODUCTION

On May 27, 2005 in accordance with Title 22 CCR Section 66264.192, "Design and Installation of New Tank Systems and Components", Metro Environmental Services, Inc. performed an assessment of the anchorage system for Tank #124, a 9,000-gallon hazardous waste storage tank at the Romic Environmental Technologies Corp facility located at 6760 West Allison Road in Chandler, Arizona. The tank and associated piping system serve to store hazardous waste.

ASSESSMENT ITEMS

Tank Anchorage System Installation Inspection

The tank anchorage system was inspected for the following installation defects: weld breaks; punctures; cracks; corrosion; damaged fittings; and other structural damage or inadequate installation. No discrepancies were noted.

CERTIFICATION

I hereby certify that the installed tanks and components of the piping system referenced in this report have been properly inspected and are capable of handling the material referenced in this report without the likelihood of release.

I certify under penalty of law that this document was prepared under my direction and supervision in accordance with a system designed to assure that qualified personnel properly gather and evaluate the information submitted. Based on my inquiry of the person or persons who manage the system, or those persons directly responsible for gathering the information, the information submitted is, to the best of my knowledge and belief, true, accurate, and complete. I am aware that there are significant penalties for submitting false information, including the possibility of fine and imprisonment for knowing violations.

REGISTERED PROFESSIONAL ENGINEER
GEORGE ONEY
exp 6/30/07
No. CH004494
CHEMICAL
STATE OF CALIFORNIA

George A. Oney, P.E.
Chemical Engineer
Registration No. CH004494

Project Name: ROMIC SOUTHWEST – Chandler, AZ

Tank I.D.No. TK–124

Location: Tank Farm C

Service: Waste Storage

Contents: Organic/aqueous

Size: 9,000 gal. S.G.: 1.0–1.4

Fill GPM: 250 Empty GPM: 250

Support: Flat Bottom

Insulation: n/a Agitator: n/a

Weight: 4,900± lbs. Empty

110,000± lbs. Full

Temp (°F) AMB.

Pressure (Psig): ATM.

Seismic Zone: 2

Material: Carbon Steel

Method of Construction: Welded

CONNECTION

No.	Size	Type	Rating	Function
A	4"	RF	150#	BOTTOM NOZZLE
B	4"	RF	150#	SIDE OUTLET
C	2 1/2"	RF	150#	VENT
D	4"	RF	150#	SPARE
E	12"	RF	150#	LEVEL INDICATOR
M	24"	FF	n/a	TOP MANWAY
S	1"	HC	3000#	SAMPLE PORT

REMARKS

1. Standard cone top
2. Flat bottom

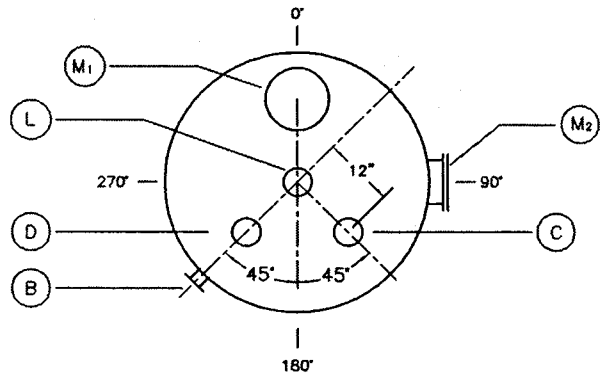

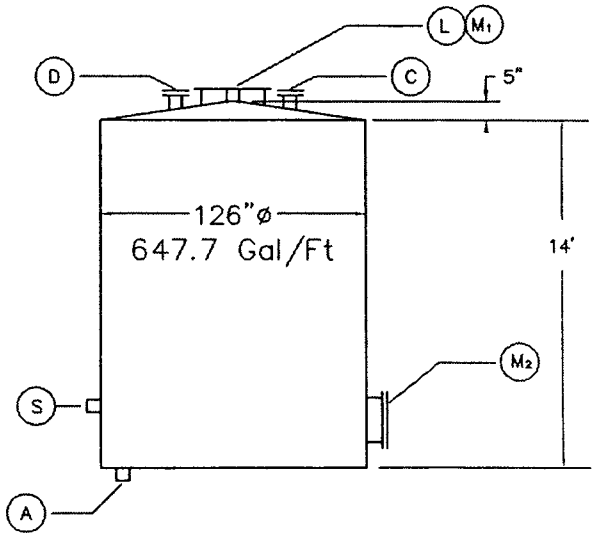

Rev No.	Revision	By	Date	Apprvd	Date
1	Update for 2004 Part B	RP	4–7–04	WK	4–04

ROMIC
ENVIRONMENTAL TECHNOLOGIES CORP.
ROMIC SOUTHWEST, CHANDLER, ARIZONA

Drawing Number Tk 124

METRO ENVIRONMENTAL SERVICES, INC.

1256-B West Brooks Street, Ontario, CA 91762
Tel: (909) 983-3848 Fax: (909) 983-3498

LSI PN: **2K502** Tank 124 **Issued:** **01/31/05**
Project Name: **Romic Environmental Technologies Corporation**
Project Location: **ROMIC Southwest, Chandler, Arizona.**

Table of Contents:

		Page No.
1	Scope of work, design loads and tank data	1
2	Seismic and wind analysis for overturning moment	2
3	Check existing anchorage	3

Registered Professional Engineer (Civil)
CERTIFICATE NO
31521
WANTHONG
STEVENSON
LIM
Date Signed 1/26/05
ARIZONA U.S.A.

SCOPE OF WORK: **Tank Designation:** Tank 124

- Analyzed existing anchorage for 10'-6" Diameter by 14" high tank flat bottom tank
  Existing tank with (4)L4x4x3/8, each with (1) 3/4" diameter anchor bolt
- Check existing anchorage.

DESIGN LOADS:

2000 International Building Code. 80 MPH wind, Seismic Use group II

WIND: F= Qz * G * Cf * Af
Where Qz = 0.00256 Kz Kzt Kd V^2 I
Qz = 0.00256*0.9*1.0*0.95*90^2*1.0 =
17.73 psf

F wnd = 2743 lbs.
M otm = F wind * H otm = 19199 lbs-ft

H =	14.5	ft
D =	10.5	ft
Kz =	0.9	Tbl 6-3 Case2
Kzt =	1	Tbl 6-4 Flat
Kd =	0.95	Tbl 6-4
V =	90	MPH Fig 6-1
I =	1	Tbl 6-1
For H/D =	1.38	
Cf =	1.4	Tbl 6-19
Gf =	0.85	Sec 6.5.8
Af =	130	Sq. Ft.
H otm =	7	ft

Location: Chandler State: Arizona

From Fig. 1615(1): Ss = 0.21 g
From Fig. 1615(2): S1 = 0.063 g

Sds = 0.67 Fa Ss = 0.224 W

Siteclass: D

Fa =	1.6	Tbl 1615.1.2(1)
R =	3	Tbl 1622.2.5(1)
Omega =	2	Tbl 1622.2.5(1)
Ie =	1.25	Tbl 1622.2.5(2)
W =	111000	lbs

V seismic = Cs W Eq. 16-34
= 0.093 W

Cs = Sds /R * I = 0.0933
Cs min=0.044SdsI = 0.0123
Use Cs = 0.0933

T = 0.00000765*(L / D)^2 *(wD / t) ^ 0.5 = 0.000000765*(14./10.5)^2 *(46000/14*10.5/0.34)^.5
= 0.000433 < 0.06 Rigid Structure

Vsimplified = 1.2 Sds W / R = 0.090 W
Vnonstr = 0.14 Sds Ie = 0.039 W
Cs min nonstr = 0.8S1 I / R = 0.021 W
Vs rigid nonstr = 0.3 Sds I W = 0.084 W

Use Vs = 0.093 W
Vs asd = **0.067 W**

Overturning Moment = Vs W * 1.2 sloshing * H otm = **62160** lbs-ft **Seismic Control**

Check existing anchorage according to API 650 Appendix E - Seismic design of Storage Tanks

Given information:

Material:	Carbon steel
Thickness:	0.34"
Concrete slab thickness:	Min 6"
Full Tank +wt tank:	110000 lbs
Agitator:	0 lbs
Misc valves and structures:	1000 lbs

Seismic Analysis per API-650 Appendix E

Seismic zone, Z = (Zone 4=0.4,zone 3=0.3,zone 2=0.2,zone 1=0.075)		0.40	
Seismic Importance factor, Is = (Max I = 1.5, **normally I = 1.0**)		1.25	
Site coefficient from soil type, s = (S4=2, **S3=1.5**, S2=1.2, S1=1.0)		1.50	
Spcific gravity of liquid, **G** =		1.4	
Tank diameter, **D** =		10.50	ft
Height of tank, **Ht** =		14.00	ft
Fill height from top of floor, **H** =		14.00	ft
Weight of content, **Wt** =		105.10	kips
Weight of shell, uncorroded,**Ws**= .49*(.34/12*2*22/7*5.25*14)=	6.4141	6.414	kips
Weight of roof steel, uncorroded, **Wr'** = .49*.20/12*2*22/7*4.5=		0.256	kips
Roof equipment load in seismic, **We** =		1.00	kips
Ratio of **D / H** =		0.75	
Weight or roof & equipment load, **Wr** = Wr' + We =		1.26	Kips
Height of center of gravity of shell, **Xs** = H / 2 =		7.00	ft
From Figure E-2 Effective masses, **W1 / Wt** =	*0.865*	0.87	
Contents in unison w/ shell, **W1** = Wt * (W1 / Wt) =		90.95	Kips
From Figure E-2 Effective masses, **W2 / Wt** =	*0.191*	0.19	
First sloshing mode contents, **W2** = Wt * (W2 / Wt) =		20.08	Kips
From Figure E-3 Centroids of seismic forces, **X1 / H** =	*0.429*	0.43	
Height to centroid, **X1** = H * (X1 / H) =		6.01	
From Figure E-3 Centroids of seismic forces, **X2 / H** =	*0.771*	0.77	
Height to centroid, **X2** = H * (X2 / H) =		10.79	
From Figure E-4 Factor k, k =	*0.577*	0.58	
Natural period of first mode, **T** = k * (D)^0.5 =		1.87	seconds
Lateral force coefficient, **C1** = **0.24**		0.24	
Lateral force coefficient, **C2** = **C2 = 0.3S/T =**		0.24	

Base shear **Vs** = Z * I *(C1 * (Ws + Wr + W1) + C2 * W2) =	14.25 Kips
Overturning, **Mot** = Z * I *(C1*Ws*Xs + C1*Wr*Ht + C1*W1*X1 + C2*W2*X2)=	**87.08** K-ft
Friction resistance from contents,shell, roof steel, **Ffric**=0.4 *(Wt+Ws+Wr') =	44.71 Kips
Factor of safety for sliding, **FSs** = Fric / Vs =	**3.14 > 1.5 OK**

Calculate resistance load against overturning:

Yield strength of tank material, **Fy** =		36.00	ksi
Thickness of bottom plate, **tb** = max (tf -co), thickness of floor or 0.25 =		6.00	
Wt of contents allow for OT calc. per cicumference,**WL**=7.9 tb(Fby G H)^0.5=		39816.00	plf
Max allowable for WL = 1.25 G H D =	257.25 plf **Use:**	257.25	plf
Resistance to OT by contents, **Pr** = 22/7 * D * WL =		8.49	Kips
Resistance to OT by shell and roof, **Psr** = Ws + Wr =		7.67	Kips
Total resistance to OT moment, **Mr** = (Pr + Psr) * D / 2 =		84.84	k-ft

Mot > Mr, Anchorage required

Wind analysis per API 650 section 3.11 Wind load on Tanks

Based on 30 psf on vertical plane surface or 22 psf on projected area of cylindrical surface

Wind pressure, **qw** =	22.00	psf
Base shear from wind, **Vw** = qw * Ht * D =	3.23	Kips
Overturning due to wind, **Motmw** = Vw * 14/2=	22.64	K-ft

Since Resistance to Overturning of tank <seismic or wind overturning, anchorage req'd.

Check existing anchor bolts.

Overturning, Mot = Z * I *(C1*Ws*Xs + C1*Wr*Ht + C1*W1*X1 + C2*W2*X2)= 87.08 k-ft
Base shear Vs = Z * I *(C1 * (Ws + Wr + W1) + C2 * W2) = 14.25 Kips

Consider only two bolts are resisting overturning at one time.
Tension of one bolt = 87.08 / 10.5 ft / 2 bolts = 4.15 Kips
Shear of one bolt = 14.25 / 4 = 3.56 Kips
Combined stress of tension and shear = (4.15/4.4)^(5/3)+ (4.15/8.4)^(5/3)= 1.01 **< 1.33**

Cap of pullout cone fr each bolt = .55*.65*(22/7*10^2/4)*(3000)^0.5*4/3*3*1 6.15 **Kips O.k.**

Check min t clip = (6*4.15*2*.75/(4*.75*36))^.5 = 0.588 > 3/8"

Therefore the existing L4x4x3/8 clip thickness is inadequate.

Use: **New (4) L4x4x5/8 w/ 3/4" diameter Kwik Bolt II expansion anchors**
Min 4.75" embedment length
1/4" fillet weld, 3.5" length on both sides of L4x4x5/8 to existing tank.

Cap of weld = .928*4*3.5*2 = 25.984 Kips > 4.15

Kwik Bolt II Expansion Anchor

4.3.3.1 PRODUCT DESCRIPTION

The Kwik Bolt II is a stud type expansion anchor with a single piece wedge that performs as three independent wedges if necessary to provide consistent performance in a wide variety of medium-duty applications. Applicable base materials include concrete, lightweight concrete and grout-filled block.

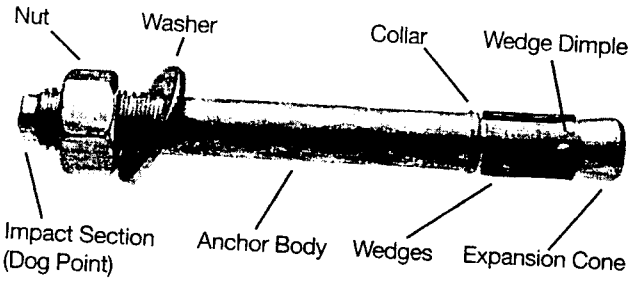

Product Features

- Impact section (Dog Point) prevents thread damage during installation
- Independent 3-piece wedge with dimples help prevent anchor from spinning during installation
- Length identification code facilitates quality control & inspection after installation
- Anchor size is same as drill bit size for easy installation
- Comprehensive performance testing to provide high & consistent performance in concrete, light-weight concrete & grout filled block base materials
- Mechanical expansion allows immediate load application
- Can be installed in bottomless hole, which allows the anchor to be driven flush with the surface after use. Eliminates cutting bolt heads.
- Can be installed through the fixture, improving productivity
- Comprehensive product offering includes many head styles, sizes, carbon steel and stainless steel materials for a variety of applications

Guide Specifications

Expansion Anchors

Expansion anchors shall be stud type with a single piece three section wedge and zinc plated in accordance with ASTM B633. The anchors must meet the description in Federal Specification FF-S-325, Group II, Type 4, Class I for concrete expansion anchors. Anchors shall be Hilti Kwik Bolt II as supplied by Hilti, Inc., P.O. Box 21148, Tulsa, OK 74121.

Installation

Anchors to be installed in holes drilled with Hilti carbide tipped drill bits or matched tolerance diamond core bits. Anchors shall be installed per manufacturer's recommendations.

Listings/Approvals

- Underwriters Laboratory No. 203 "Pipe Hangers" (3/8"-3/4" diameters)
- International Conference of Building Officials (ICBO ES): Evaluation Report No. 4627, KB II
- International Conference of Building Officials (ICBO ES): Evaluation Report No. 5224, HCKB
- Southern Building Code Congress (SBCCI): Report No. 9930
- City of Los Angeles (COLA): Research Report No. 24946
- Conforms to the description in Federal Specification FF-S-325, Group II, Type 4, Class 1
- Factory Mutual (FM) KB II 3/8" x 2 1/4" w/Rod Coupler
- Metro-Dade County Approval 98-0901.13

4.3.3.2 MATERIAL SPECIFICATIONS

	MECHANICAL PROPERTIES	
	f_y ksi (MPa)	min. f_u ksi (MPa)
Carbon Steel KB II studs conform to ASTM A510 with chemical composition of AISI 1038 except countersunk KB II, KB 3/4" x 12", KB II 1" x 6", KB II 1" x 9" and KB II 1" x 12" which conform to ASTM A108 with chemical composition of AISI 11L41	41 (282) 75 (517)	75 (517) 90 (620)
Wedges are manufactured from AISI 1010 carbon steel, except KB II 3/4" x 12", KB II 1" x 6", KB II 1" x 9" and KB II 1" x 12" wedges which conform to chemical composition of AISI 304	N/A	N/A
Nuts are carbon steel conforming to ASTM A563 Grade A and meet dimensional requirements of ANSI B18.2.2	N/A	N/A
Washers are carbon steel conforming to SAE 1005-1033 and meet dimensional requirements of ANSI 18.22.1 Type A Plain	N/A	N/A
All carbon steel parts are zinc plated in accordance with ASTM B633, Type III Fe/Zn 5	N/A	N/A
Stainless Steel KB II studs conform to ASTM A276 or ASTM A493 with chemical composition of either AISI 304 or 316 1/4" thru 9/16" over 9/16"	76 (524) 64 (441)	90 (620) 76 (524)
Stainless steel wedges are of the same material grade as bolts or superior.		
Nuts are stainless steel conforming to ASTM F594 with chemical composition of either AISI 304 or 316 and meeting dimensional requirements of ANSI B18.2.2 to conform with stud material		
Washers are AISI 304 or 316 stainless steel conforming to ASTM A240 to conform with stud material		

Note: *Special Order KB II's, nuts and washers may vary from standard materials.*

Carbon Steel Kwik Bolt II Allowable Loads in Concrete

Anchor Diameter in. (mm)	Embedment Depth in. (mm)	2000 psi (13.8 MPa)		3000 psi (20.7 MPa)		4000 psi (27.6 MPa)		6000 psi (41.4 MPa)	
		Tension lb (kN)	Shear lb (kN)	Tension lb (kN)	Shear lb (kN)	Tension lb (kN)	Shear lb (kN)	Tension lb (kN)	Shear lb (kN)
1/4 (6.4)	1 1/8 (29)	270 (1.2)	430 (1.9)	330 (1.5)	430 (1.9)	380 (1.7)	430 (1.9)	470 (2.1)	430 (1.9)
	2* (51)	560 (2.5)	530 (2.4)	590 (2.6)	530 (2.4)	630 (2.8)	530 (2.4)	670 (3.0)	530 (2.4)
	3 3/4* (95)	670 (3.0)		670 (3.0)		670 (3.0)			
3/8 (9.5)	1 5/8 (41)	530 (2.4)	990 (4.4)	650 (2.9)	1040 (4.6)	750 (3.3)	1100 (4.9)	850 (3.8)	1100 (4.9)
	2 1/2* (64)	1200 (5.3)	1470 (6.5)	1290 (5.7)	1470 (6.5)	1370 (6.1)	1470 (6.5)	1550 (6.9)	1470 (6.5)
	4 1/4* (108)	1330 (5.9)		1390 (6.2)		1440 (6.4)			
1/2 (12.7)	2 1/4 (57)	1170 (5.2)	1940 (8.6)	1310 (5.8)	1970 (8.8)	1450 (6.4)	1970 (8.8)	1730 (7.7)	1970 (8.8)
	3 1/2* (89)	1870 (8.3)	2450 (10.9)	2130 (9.5)	2450 (10.9)	2400 (10.7)	2450 (10.9)	2800 (12.5)	2450 (10.9)
	6* (152)	2080 (9.3)		2310 (10.3)		2530 (11.3)			
5/8 (15.9)	2 3/4 (70)	1600 (7.1)	3070 (13.7)	1870 (8.3)	3070 (13.7)	2130 (9.5)	3070 (13.7)	2670 (11.9)	3070 (13.7)
	4** (102)	2400 (10.7)	3840 (17.1)	2850 (12.7)	3840 (17.1)	3290 (14.6)	3840 (17.1)	4190 (18.6)	3840 (17.1)
	7** (178)	3200 (14.2)		3470 (15.4)		3730 (16.6)			
3/4 (19.1)	3 1/4 (83)	1970 (8.8)	4140 (18.4)	2320 (10.3)	4140 (18.4)	2670 (11.9)	4140 (18.4)	3200 (14.2)	4140 (18.4)
	4 3/4** (121)	2930 (13.0)	5120 (22.8)	4130 (18.4)	5120 (22.8)	4800 (21.4)	5120 (22.8)	5870 (26.1)	5120 (22.8)
	8** (203)	4000 (17.8)		4930 (21.9)		5870 (26.1)		6320 (28.1)	
1 (25.4)	4 1/2 (114)	3330 (14.8)	7070 (31.4)	4050 (18.0)	7600 (33.8)	4670 (20.8)	8140 (36.2)	5070 (22.6)	9200 (40.9)
	6 (152)	4930 (21.9)	9200 (40.9)	6000 (26.7)	9200 (40.9)	7070 (31.4)	9200 (40.9)	8400 (37.4)	
	9 (229)	6670 (29.7)		7670 (34.1)		8670 (38.6)		10670 (47.5)	

* Values shown are for a shear plane acting through the anchor bolt body. When the shear plane is acting through the anchor bolt threads, reduce the shear values by 20%.

Shear Through The Threads

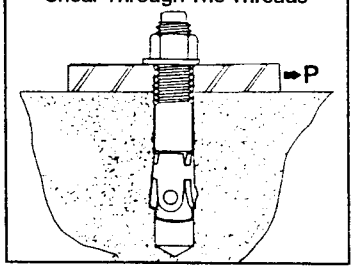

** Values shown are for a shear plane acting through the anchor bolt body. When the shear plane is acting through the anchor bolt threads, reduce the shear value by 12%.

Shear Through The Bolt Body

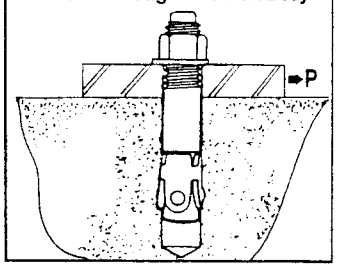

All other values shown are for shear plane acting through either body or threads.

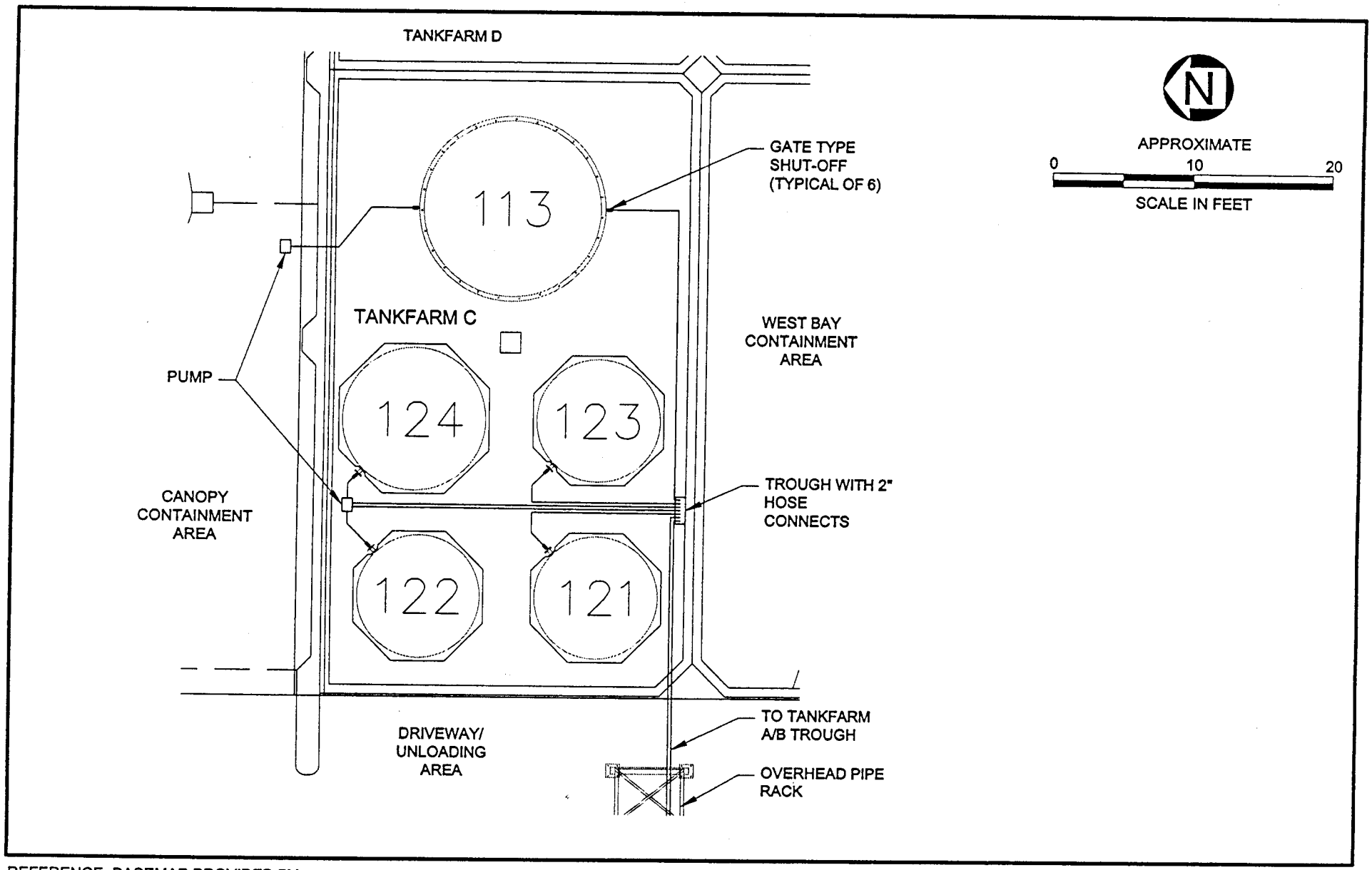

REFERENCE: BASEMAP PROVIDED BY:

ROMIC
ENVIRONMENTAL TECHNOLOGIES CORP.
ROMIC SOUTHWEST, CHANDLER, ARIZONA

URS

Tankfarm C

Romic - Southwest
Chandler, Arizona

Figure D-7

P:\ROMIC\CADD\FIGURES\A16454.DWG 02-14-05
XREF: P:\ROMIC\CADD\FIGURES\ROMIC-SITE.DWG

Tank Certification Report

Tank T-132

Prepared for: Romic Environmental Technologies Corp,
6760 West Allison Road
Chandler, AZ 85226

Prepared by: Metro Environmental Services, Inc.
1256-B West Brooks Street
Ontario, CA 91762

INTRODUCTION

On February 7, 2005 in accordance with Title 22 CCR Section 66264.192, "Design and Installation of New Tank Systems and Components", Metro Environmental Services, Inc. performed an assessment of Tank #132, a 4,100-gallon hazardous waste storage tank at the Romic Environmental Technologies Corp facility located at 6760 West Allison Road in Chandler, Arizona. The tank and associated piping system serve to store hazardous waste.

ASSESSMENT ITEMS

Compatibility of Waste Material with Tank Materials of Construction

The waste material contained in this tank is acidic hazardous waste. This material is compatible with the materials of construction of the tank and piping.

Tank / Piping System Details

The 4,100-gallon tank, (Tank #132), is constructed of high-density polyethylene. Please refer to the attached Tank Specification Sheet for tank details.

The piping system for this tank is constructed of polyethylene. All piping appears to have been installed using good engineering and mechanical practices and is supported adequately to prevent against physical damage and excessive stress due to settlement, vibration, expansion, or contraction.

Leak Detection and Spill Prevention Equipment / Instrumentation

The entire tank and piping system is aboveground and is easily accessible. Leak detection will be by visual inspection. Qualified personnel will inspect the entire tank and piping system at least once per day.

Tank Support System

The tank rests directly upon the concrete slab floor. This tank system was installed under the supervision of site personnel.

Tank Secondary Containment System

The tank is located inside of a secondary containment tank. This tank is located inside of a containment area that also contains a number of additional hazardous waste storage and processing tanks. Containment has been certified separately by others.

Tank and Piping System Installation Inspection

The tank and piping was inspected for the following installation defects: weld breaks; punctures; cracks; corrosion; damaged fittings; and other structural damage or inadequate construction or installation. No discrepancies were noted.

System Tightness Testing

The system was tested for tightness by filling with product prior to the final inspection. No leakage or signs of previous leakage were evident during the final inspection.

Estimated Remaining Service Life

The tank was installed in 1992. Considering the current age of the system, materials of construction, intended use, and quality of construction, the remaining service life is estimated to be greater than five years. A re-inspection should be performed five years from the date of this inspection.

CERTIFICATION

I hereby certify that the installed tanks and components of the piping system referenced in this report have been properly inspected and are capable of handling the material referenced in this report without the likelihood of release.

I certify under penalty of law that this document was prepared under my direction and supervision in accordance with a system designed to assure that qualified personnel properly gather and evaluate the information submitted. Based on my inquiry of the person or persons who manage the system, or those persons directly responsible for gathering the information, the information submitted is, to the best of my knowledge and belief, true, accurate, and complete. I am aware that there are significant penalties for submitting false information, including the possibility of fine and imprisonment for knowing violations.

REGISTERED PROFESSIONAL ENGINEER
GEORGE ONEY
exp 6/30/05
No. CH004494
CHEMICAL
STATE OF CALIFORNIA

George A. Oney, P.E.
Chemical Engineer
Registration No. CH004494

Project Name: ROMIC SOUTHWEST – Chandler, AZ

Tank I.D.No. TK–401 to TK–403

Location: Tank Farm E

Service: Waste Storage

Contents: Alkaline waste

Size: 4,100 gal. S.G.: 1.0–1.4

Fill GPM: 250 Empty GPM: 250

Support: Sloped Bottom

Insulation: n/a Agitator: n/a

Weight: 1,000± lbs. Empty

49,000± lbs. Full

Temp (°F) AMB.

Pressure (Psig): ATM.

Seismic Zone: 2

Material: High density polyethylene

Method of Construction: Molded

CONNECTION

No.	Size	Type	Rating	Function
A	4"	RF	150#	BOTTOM NOZZLE
B	4"	RF	150#	SIDE OUTLET
C	2 1/2"	RF	150#	VENT
D	4"	RF	150#	SPARE
E	12"	RF	150#	LEVEL INDICATOR
M	24"	FF	n/a	TOP MANWAY
S	1"	HC	3000#	SAMPLE PORT

REMARKS

1. Standard cone top
2. Sloped bottom

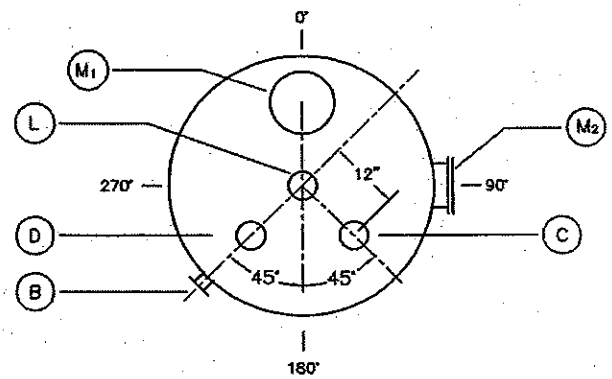

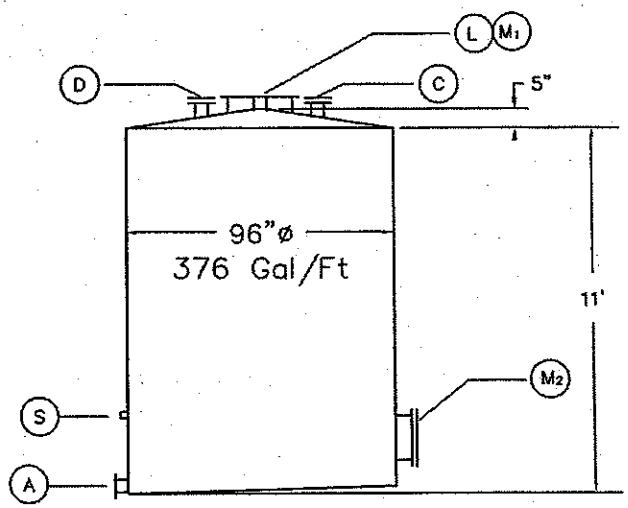

Rev No.	Revision	By	Date	Apprvd	Date
1	Update for 2004 Part B	RP	4–14–04	WK	4–04

ROMIC
ENVIRONMENTAL TECHNOLOGIES CORP.
ROMIC SOUTHWEST, CHANDLER, ARIZONA

Drawing Number TK–401 to TK–403

METRO
ENVIRONMENTAL
SERVICES, INC.

1256-B West Brooks Street, Ontario, CA 91762
Tel: (909) 983-3848 Fax: (909) 983-3498

LSI PN: 2K502 Tank 132 & tank 136 **Issued: 02/12/05**
Project Name: Romic Environmental Technologies Corporation
Project Location: ROMIC Southwest, Chandler, Arizona.

Table of Contents: **Page No.**

1	Scope of work, design loads and tank data	1
2	Seismic and wind analysis for overturning moment	2
3	Design new brace beam, support column, base plate and anchor bolts	3
	Attach two page of Hilti Kwik II bolt technical data	

Registered Professional Engineer (Civil)
CERTIFICATE NO
31521
WANTHONG
STEVENSON
LIM
Date Signed 2/6/05
ARIZONA U.S.A.

SCOPE OF WORK: **Tank Designation:** **TK 132 and T 136.**

- Analyzed existing anchorage for 8'-0" Diameter by 11'-0" highPolyethylene tank setting inside of a 12'-0" diameter 6'-0" high containment tank
- Design brace beam, support column, anchor bolts and base plate.

DESIGN LOADS:

2000 International Building Code. 80 MPH wind, Seismic Use group II

WIND: F= Qz * G * Cf * Af

Where Qz = 0.00256 Kz Kzt Kd V^2 I

Qz = 0.00256*0.9*1.0*0.95*90^2*1.0 = 17.73 psf

F wnd = 2532 lbs.

M otm = F wind * H otm = 13925 lbs-ft

H =	11	ft
D =	8	ft
Kz =	0.9	Tbl 6-3 Case2
Kzt =	1	Tbl 6-4 Flat
Kd =	0.95	Tbl 6-4
V =	90	MPH Fig 6-1
I =	1	Tbl 6-1
For H/D =	1.375	
Cf =	1.4	Tbl 6-19
Gf =	0.85	Sec 6.5.8
Af =	120	Sq. Ft.
H otm =	5.5	ft

Location: Chandler State: Arizona

From Fig. 1615(1): Ss = 0.21 g

From Fig. 1615(2): S1 = 0.063 g

Sds = 0.67 Fa Ss = 0.224 W

Siteclass:	D	
Fa =	1.6	Tbl 1615.1.2(1)
R =	3	Tbl 1622.2.5(1)
Omega =	2	Tbl 1622.2.5(1)
Ie =	1.25	Tbl 1622.2.5(2)
W =	50000	lbs

V seismic = Cs W Eq. 16-34

= 0.093 W

Cs = Sds /R * I = 0.0933

Cs min=0.044SdsI = 0.0123

Use Cs = 0.0933

Vsimplified = 1.2 Sds W / R = 0.090 W

Vnonstr = 0.14 Sds Ie = 0.039 W

Cs min nonstr = 0.8S1 I / R = 0.021 W

Vs rigid nonstr = 0.3 Sds I W = 0.084 W

Use Vs =	**0.093**	**W**
Vs asd =	**0.067**	**W**

Overturning Moment = Vs W * 1.2 sloshing * H otm = **22000** lbs-ft **Seismic Control**

Check existing anchorage according to API 650 Appendix E - Seismic design of Storage Tanks

Given information:

Material:	High Density Polethylene
Thickness:	0.88
Concrete slab thickness:	Min 6"
Full Tank +wt tank:	49000 lbs
Agitator:	0 lbs
Misc valves and structures:	1000 lbs

Seismic Analysis per API-650 Appendix E

Seismic zone, Z = (Zone 4=0.4,zone 3=0.3,zone 2=0.2,zone 1=0.075)		0.40	
Seismic Importance factor, Is = (Max I = 1.5, **normally I = 1.0**)		1.25	
Site coefficient from soil type, s = (S4=2, **S3=1.5**, S2=1.2, S1=1.0)		1.50	
Spcific gravity of liquid, **G** =		1.4	
Tank diameter, **D** =		8.00	ft
Height of tank, **Ht** =		11.00	ft
Fill height from top of floor, **H** =		11.00	ft
Weight of content, **Wt** = 22/7*(D/2)^2*H*62.4pcf/1000 =		48.32	kips
Weight of shell, uncorroded,**Ws**=		1.000	kips
Weight of roof, **Wr'** =		0.500	kips
Roof equipment load in seismic, **We** =		0.50	kips
Ratio of **D / H** =		0.73	
Weight or roof & equipment load, **Wr** = Wr' + We =		1.00	Kips
Height of center of gravity of shell, **Xs** = H / 2 =		5.50	ft
From Figure E-2 Effective masses, **W1 / Wt** =	*0.870*	0.87	
Contents in unison w/ shell, **W1** = Wt * (W1 / Wt) =		42.06	Kips
From Figure E-2 Effective masses, **W2 / Wt** =	*0.186*	0.19	
First sloshing mode contents, **W2** = Wt * (W2 / Wt) =		8.99	Kips
From Figure E-3 Centroids of seismic forces, **X1 / H** =	*0.431*	0.43	
Height to centroid, **X1** = H * (X1 / H) =		4.74	
From Figure E-3 Centroids of seismic forces, **X2 / H** =	*0.776*	0.78	
Height to centroid, **X2** = H * (X2 / H) =		8.54	
From Figure E-4 Factor k, k =	*0.577*	0.58	
Natural period of first mode, **T** = k * (D)^0.5 =		1.63	seconds
Lateral force coefficient, **C1** = **0.6**		0.24	
Lateral force coefficient, **C2** = **C2 = 0.3S/T =**		0.28	

Base shear **Vs** = Z * I *(C1 * (Ws + Wr + W1) + C2 * W2) =	6.53	Kips
Overturning, **Mot** = Z * I *(C1*Ws*Xs + C1*Wr*Ht + C1*W1*X1 + C2*W2*X2)=	**35.96**	K-ft
Friction resistance from contents,shell, roof steel, **Ffric**=0.4 *(Wt+Ws+Wr') =	19.93	Kips
Factor of safety for sliding, **FSs** = Fric / Vs =	**3.05 > 1.5 O.K.**	

Calculate resistance load against overturning:

Yield strength of tank material, **Fy** =		6.00	ksi
Thickness of bottom plate, **tb** = max (tf -co), thickness of floor or 0.25 =		0.88	
Wt of contents allow for OT calc. per cicumference,**WL**=7.9 tb(Fby G H)^0.5=		2101.22	plf
Max allowable for WL = 1.25 G H D = 154 plf	**Use:**	154.00	plf
Resistance to OT by contents, **Pr** = 22/7 * D * WL =		3.87	Kips
Resistance to OT by shell and roof, **Psr** = Ws + Wr =		2.00	Kips
Total resistance to OT moment, **Mr** = (Pr + Psr) * D / 2 =		23.49	k-ft

Mot > Mr, Anchorage required

Wind analysis per API 650 section 3.11 Wind load on Tanks

Based on 30 psf on vertical plane surface or 22 psf on projected area of cylindrical surface

Wind pressure, **qw** =		22.00	psf
Base shear from wind, **Vw** = qw * Ht * D =		1.94	Kips
Overturning due to wind, **Motmw** = Vw * Ht / 2 =		10.65	K-ft

Wind pressure from 2001CBC, **Pw** = Ce Cq qs Iw =					21.66 psf
For 70 MPH wind, Exp. C	Where	22' Ce =	1.15	Cq =	1.30
		70mph qs=	12.6	Iw =	1.15
Overturning due to wind from 2001CBC, **Motmw** = Pw * Ht * D * Ht / 2 =					**10.48** k-ft

Since Resistance to Overturning of tank <seismic or wind overturning, anchorage req'd.

Design braced beam, support column, base plate and anchor bolts.

Overturning, Mot = Z * I *(C1*Ws*Xs + C1*Wr*Ht + C1*W1*X1 + C2*W2*X2)=		35.96 k-ft
Base shear Vs = Z * I *(C1 * (Ws + Wr + W1) + C2 * W2) =		6.53 Kips

Design an anchorage steel frame for overturning:

Sx min = M* 12* .75/ (.6*36) =		11.72 in^3

Use W 8 x 18 brace beam w/ W8x18 column. Fy = 36 ksi

Shear weld at 3/4" thick cap plate =	6.53 / (.928*3*4/3) =	1.76 in.
1/4" Weld at base =	M /2 * 12 * .75 /(bd + d^2 / 3) = b= 5.25, d = 8.125	2.50 kli
Cap of 3/16" fillet weld =	.928*4 =	3.712 kli/in
Tension on the base plate =	M * 12 /(8.125+ 2+2) / 6 bolts =	5.93 Kip < 6
Shear on 1" diameter bolts =	6.53 / 12 bolts =	0.54 Kips<9.2
Combine shear and tension =	(.54 / 9.2)^(5/3) + (5.93/ 6)^(5/3) =	0.990 < 1.33
Base plate thk min =	(6*3*5.93*2*.75/(10*.75*36))+D65^.5 =	0.593 in
Cap of pullout cone fr 3 bolts =	.55*.65*(22/7*10^2/4)*(3000)^0.5*4/3*3*3	26.59 **Kips O.k.**

Use: **Cap plate 3/4" x 8 x 9 w/ 3/16" fillet weld, weld flange to cap plate.**

Use: **Base plate 3/4" x 10 x 1'- 4" w/ (6) 1" dia. Hilti Kwik Bolts II, 6" embedment**

Kwik Bolt II Expansion Anchor

4.3.3.1 PRODUCT DESCRIPTION

The Kwik Bolt II is a stud type expansion anchor with a single piece wedge that performs as three independent wedges if necessary to provide consistent performance in a wide variety of medium-duty applications. Applicable base materials include concrete, lightweight concrete and grout-filled block.

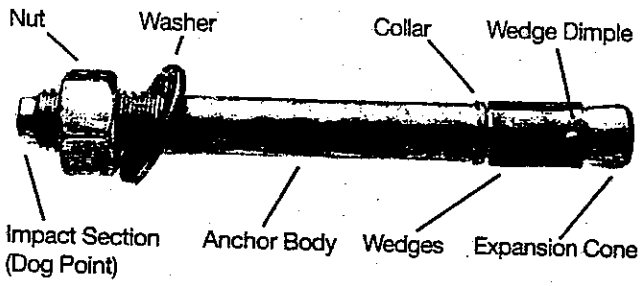

Product Features

- Impact section (Dog Point) prevents thread damage during installation
- Independent 3-piece wedge with dimples help prevent anchor from spinning during installation
- Length identification code facilitates quality control & inspection after installation
- Anchor size is same as drill bit size for easy installation
- Comprehensive performance testing to provide high & consistent performance in concrete, light-weight concrete & grout filled block base materials
- Mechanical expansion allows immediate load application
- Can be installed in bottomless hole, which allows the anchor to be driven flush with the surface after use. Eliminates cutting bolt heads.
- Can be installed through the fixture, improving productivity
- Comprehensive product offering includes many head styles, sizes, carbon steel and stainless steel materials for a variety of applications

Guide Specifications

Expansion Anchors	Expansion anchors shall be stud type with a single piece three section wedge and zinc plated in accordance with ASTM B633. The anchors must meet the description in Federal Specification FF-S-325, Group II, Type 4, Class I for concrete expansion anchors. Anchors shall be Hilti Kwik Bolt II as supplied by Hilti, Inc., P.O. Box 21148, Tulsa, OK 74121.
Installation	Anchors to be installed in holes drilled with Hilti carbide tipped drill bits or matched tolerance diamond core bits. Anchors shall be installed per manufacturer's recommendations.

Listings/Approvals

- Underwriters Laboratory No. 203 "Pipe Hangers" (3/8"-3/4" diameters)
- International Conference of Building Officials (ICBO ES): Evaluation Report No. 4627, KB II
- International Conference of Building Officials (ICBO ES): Evaluation Report No. 5224, HCKB
- Southern Building Code Congress (SBCCI): Report No. 9930
- City of Los Angeles (COLA): Research Report No. 24946
- Conforms to the description in Federal Specification FF-S-325, Group II, Type 4, Class 1
- Factory Mutual (FM) KB II 3/8" x 2 1/4" w/Rod Coupler
- Metro-Dade County Approval 98-0901.13

4.3.3.2 MATERIAL SPECIFICATIONS

	MECHANICAL PROPERTIES	
	f_y ksi (MPa)	min. f_u ksi (MPa)
Carbon Steel KB II studs conform to ASTM A510 with chemical composition of AISI 1038 except countersunk KB II, KB 3/4" x 12", KB II 1" x 6", KB II 1" x 9" and KB II 1" x 12" which conform to ASTM A108 with chemical composition of AISI 11L41	41 (282) 75 (517)	75 (517) 90 (620)
Wedges are manufactured from AISI 1010 carbon steel, except KB II 3/4" x 12", KB II 1" x 6", KB II 1" x 9" and KB II 1" x 12" wedges which conform to chemical composition of AISI 304	N/A	N/A
Nuts are carbon steel conforming to ASTM A563 Grade A and meet dimensional requirements of ANSI B18.2.2	N/A	N/A
Washers are carbon steel conforming to SAE 1005-1033 and meet dimensional requirements of ANSI 18.22.1 Type A Plain	N/A	N/A
All carbon steel parts are zinc plated in accordance with ASTM B633, Type III Fe/Zn 5	N/A	N/A
Stainless Steel KB II studs conform to ASTM A276 or ASTM A493 with chemical composition of either AISI 304 or 316 1/4" thru 9/16" over 9/16"	76 (524) 64 (441)	90 (620) 76 (524)
Stainless steel wedges are of the same material grade as bolts or superior.		
Nuts are stainless steel conforming to ASTM F594 with chemical composition of either AISI 304 or 316 and meeting dimensional requirements of ANSI B18.2.2 to conform with stud material		
Washers are AISI 304 or 316 stainless steel conforming to ASTM A240 to conform with stud material		

Note: *Special Order KB II's, nuts and washers may vary from standard material*

Carbon Steel Kwik Bolt II Allowable Loads in Concrete

Anchor Diameter in. (mm)	Embedment Depth in. (mm)	2000 psi (13.8 MPa)		3000 psi (20.7 MPa)		4000 psi (27.6 MPa)		6000 psi (41.4 MPa)	
		Tension lb (kN)	Shear lb (kN)	Tension lb (kN)	Shear lb (kN)	Tension lb (kN)	Shear lb (kN)	Tension lb (kN)	Shear lb (kN)
1/4 (6.4)	1 1/8 (29)	270 (1.2)	430 (1.9)	330 (1.5)	430 (1.9)	380 (1.7)	430 (1.9)	470 (2.1)	430 (1.9)
	2* (51)	560 (2.5)	530 (2.4)	590 (2.6)	530 (2.4)	630 (2.8)	530 (2.4)	670 (3.0)	530 (2.4)
	3 3/4* (95)	670 (3.0)		670 (3.0)		670 (3.0)			
3/8 (9.5)	1 5/8 (41)	530 (2.4)	990 (4.4)	650 (2.9)	1040 (4.6)	750 (3.3)	1100 (4.9)	850 (3.8)	1100 (4.9)
	2 1/2* (64)	1200 (5.3)	1470 (6.5)	1290 (5.7)	1470 (6.5)	1370 (6.1)	1470 (6.5)	1550 (6.9)	1470 (6.5)
	4 1/4* (108)	1330 (5.9)		1390 (6.2)		1440 (6.4)			
1/2 (12.7)	2 1/4 (57)	1170 (5.2)	1940 (8.6)	1310 (5.8)	1970 (8.8)	1450 (6.4)	1970 (8.8)	1730 (7.7)	1970 (8.8)
	3 1/2* (89)	1870 (8.3)	2450 (10.9)	2130 (9.5)	2450 (10.9)	2400 (10.7)	2450 (10.9)	2800 (12.5)	2450 (10.9)
	6* (152)	2080 (9.3)		2310 (10.3)		2530 (11.3)			
5/8 (15.9)	2 3/4 (70)	1600 (7.1)	3070 (13.7)	1870 (8.3)	3070 (13.7)	2130 (9.5)	3070 (13.7)	2670 (11.9)	3070 (13.7)
	4** (102)	2400 (10.7)	3840 (17.1)	2850 (12.7)	3840 (17.1)	3290 (14.6)	3840 (17.1)	4190 (18.6)	3840 (17.1)
	7** (178)	3200 (14.2)		3470 (15.4)		3730 (16.6)			
3/4 (19.1)	3 1/4 (83)	1970 (8.8)	4140 (18.4)	2320 (10.3)	4140 (18.4)	2670 (11.9)	4140 (18.4)	3200 (14.2)	4140 (18.4)
	4 3/4** (121)	2930 (13.0)	5120 (22.8)	4130 (18.4)	5120 (22.8)	4800 (21.4)	5120 (22.8)	5870 (26.1)	5120 (22.8)
	8** (203)	4000 (17.8)		4930 (21.9)		5870 (26.1)		6320 (28.1)	
1 (25.4)	4 1/2 (114)	3330 (14.8)	7070 (31.4)	4050 (18.0)	7600 (33.8)	4670 (20.8)	8140 (36.2)	5070 (22.6)	9200 (40.9)
	6 (152)	4930 (21.9)	9200 (40.9)	6000 (26.7)	9200 (40.9)	7070 (31.4)	9200 (40.9)	8400 (37.4)	
	9 (229)	6670 (29.7)		7670 (34.1)		8670 (38.6)		10670 (47.5)	

* Values shown are for a shear plane acting through the anchor bolt body. When the shear plane is acting through the anchor bolt threads, reduce the shear values by 20%.

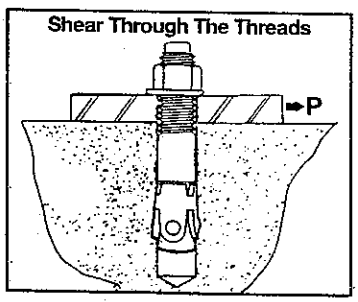

** Values shown are for a shear plane acting through the anchor bolt body. When the shear plane is acting through the anchor bolt threads, reduce the shear value by 12%.

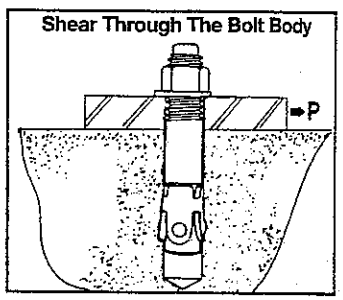

All other values shown are for shear plane acting through either body or threads.

TANK T-132 AND T-136

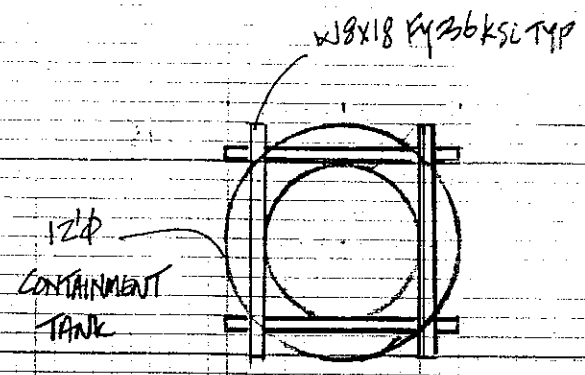

PLAN VIEW

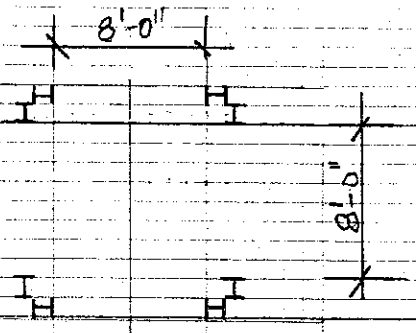

COLUMN ORIENTATION

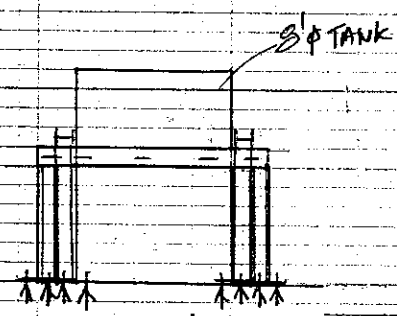

SECTION VIEW

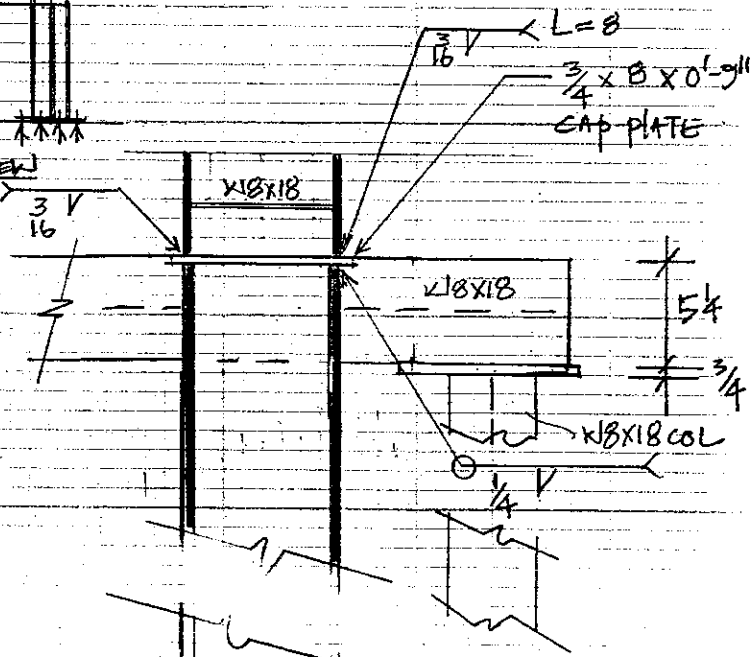

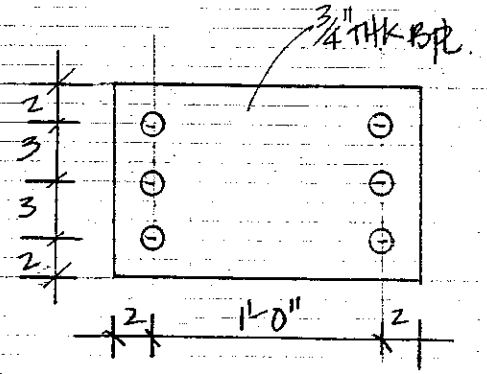

BASE PLATE

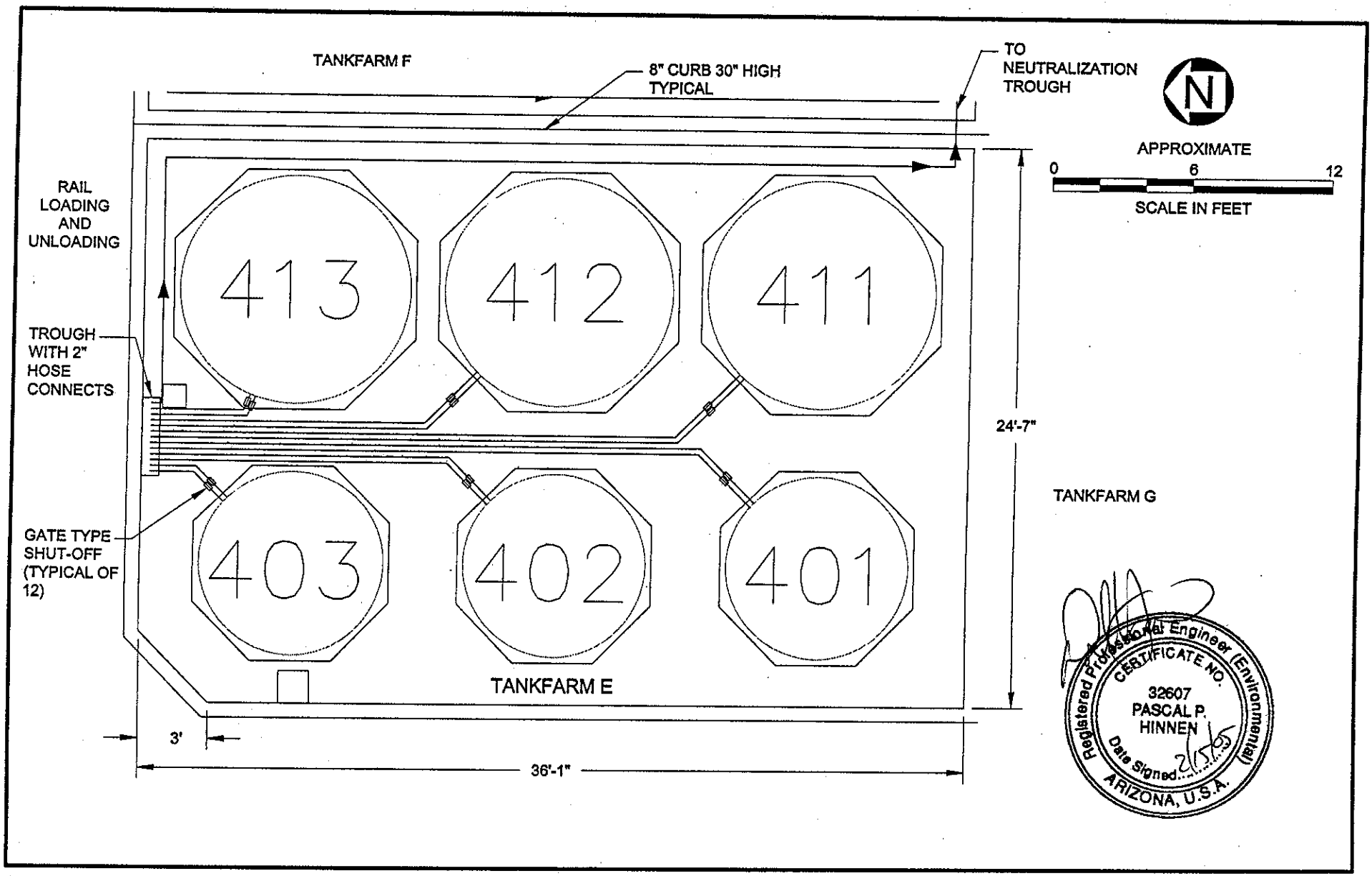

REFERENCE: BASEMAP PROVIDED BY:

ROMIC
ENVIRONMENTAL TECHNOLOGIES CORP.
ROMIC SOUTHWEST, CHANDLER, ARIZONA

URS

Proposed Tankfarm E

Romic - Southwest
Chandler, Arizona

Figure D-9

P:\ROMIC\CADD\FIGURES\A16434.DWG 02-04-05
XREF: P:\ROMIC\CADD\FIGURES\ROMIC-SITE.DWG

Tank Certification Report

Tank T-136

Prepared for: Romic Environmental Technologies Corp,
6760 West Allison Road
Chandler, AZ 85226

Prepared by: Metro Environmental Services, Inc.
1256-B West Brooks Street
Ontario, CA 91762

INTRODUCTION

On January 26, 2005 in accordance with Title 22 CCR Section 66264.192, "Design and Installation of New Tank Systems and Components", Metro Environmental Services, Inc. performed an assessment of Tank #136, a 4,100-gallon hazardous waste storage tank at the Romic Environmental Technologies Corp facility located at 6760 West Allison Road in Chandler, Arizona. The tank and associated piping system serve to store hazardous waste.

ASSESSMENT ITEMS

Compatibility of Waste Material with Tank Materials of Construction

The waste material contained in this tank is acidic hazardous waste. This material is compatible with the materials of construction of the tank and piping.

Tank / Piping System Details

The 4,100-gallon tank, (Tank #136), is constructed of high-density polyethylene. Please refer to the attached Tank Specification Sheet for tank details.

The piping system for this tank is constructed of polyethylene. All piping appears to have been installed using good engineering and mechanical practices and is supported adequately to prevent against physical damage and excessive stress due to settlement, vibration, expansion, or contraction.

Leak Detection and Spill Prevention Equipment / Instrumentation

The entire tank and piping system is aboveground and is easily accessible. Leak detection will be by visual inspection. Qualified personnel will inspect the entire tank and piping system at least once per day.

Tank Support System

The tank rests directly upon the concrete slab floor. This tank system was installed under the supervision of site personnel.

Tank Secondary Containment System

The tank is located inside of a secondary containment tank. This tank is located inside of a containment area that also contains a number of additional hazardous waste storage and processing tanks. Containment has been certified separately by others.

Tank and Piping System Installation Inspection

The tank and piping was inspected for the following installation defects: weld breaks; punctures; cracks; corrosion; damaged fittings; and other structural damage or inadequate construction or installation. No discrepancies were noted.

System Tightness Testing

The system was tested for tightness by filling with product prior to the final inspection. No leakage or signs of previous leakage were evident during the final inspection.

Estimated Remaining Service Life

The tank was installed in 1992. Considering the current age of the system, materials of construction, intended use, and quality of construction, the remaining service life is estimated to be greater than five years. A re-inspection should be performed five years from the date of this inspection.

CERTIFICATION

I hereby certify that the installed tanks and components of the piping system referenced in this report have been properly inspected and are capable of handling the material referenced in this report without the likelihood of release.

I certify under penalty of law that this document was prepared under my direction and supervision in accordance with a system designed to assure that qualified personnel properly gather and evaluate the information submitted. Based on my inquiry of the person or persons who manage the system, or those persons directly responsible for gathering the information, the information submitted is, to the best of my knowledge and belief, true, accurate, and complete. I am aware that there are significant penalties for submitting false information, including the possibility of fine and imprisonment for knowing violations.

REGISTERED PROFESSIONAL ENGINEER
GEORGE ONEY
exp 6/30/05
No. CH004494
CHEMICAL
STATE OF CALIFORNIA

George A. Oney, P.E.
Chemical Engineer
Registration No. CH004494

Project Name: ROMIC SOUTHWEST – Chandler, AZ

Tank I.D.No. TK–301 to TK–303

Location: Tank Farm F

Service: Waste Storage

Contents: Acid waste

Size: 4,100 gal. S.G.: 1.0–1.4

Fill GPM: 250 Empty GPM: 250

Support: Sloped Bottom

Insulation: n/a Agitator: n/a

Weight: 1,000± lbs. Empty

49,000± lbs. Full

Temp (°F) AMB.

Pressure (Psig): ATM.

Seismic Zone: 2

Material: High density polyethylene

Method of Construction: Molded

CONNECTION

No.	Size	Type	Rating	Function
A	4"	RF	150#	BOTTOM NOZZLE
B	4"	RF	150#	SIDE OUTLET
C	2 1/2"	RF	150#	VENT
D	4"	RF	150#	SPARE
E	12"	RF	150#	LEVEL INDICATOR
M	24"	FF	n/a	TOP MANWAY
S	1"	HC	3000#	SAMPLE PORT

REMARKS

1. Standard cone top
2. Sloped bottom

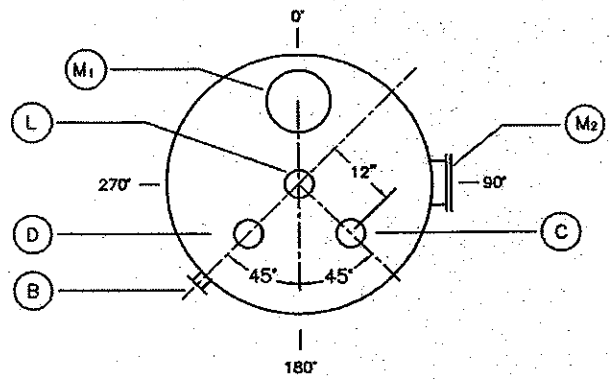

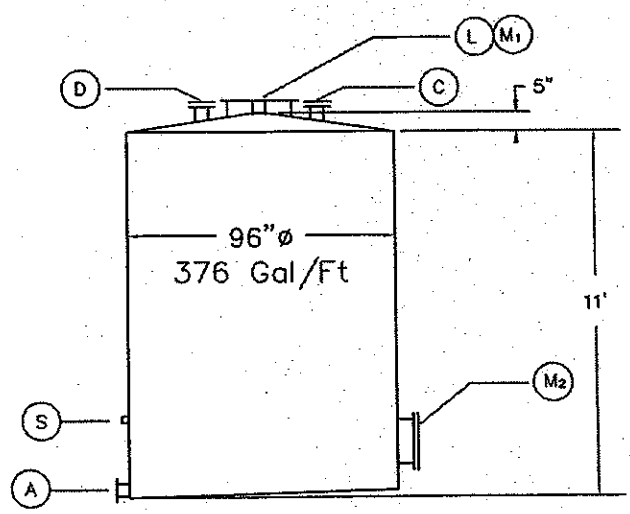

Rev No.	Revision	By	Date	Apprvd	Date
1	Update for 2004 Part B	RP	4–14–04	WK	4–04

ROMIC
ENVIRONMENTAL TECHNOLOGIES CORP.
ROMIC SOUTHWEST, CHANDLER, ARIZONA

Drawing Number TK–301 to TK–303

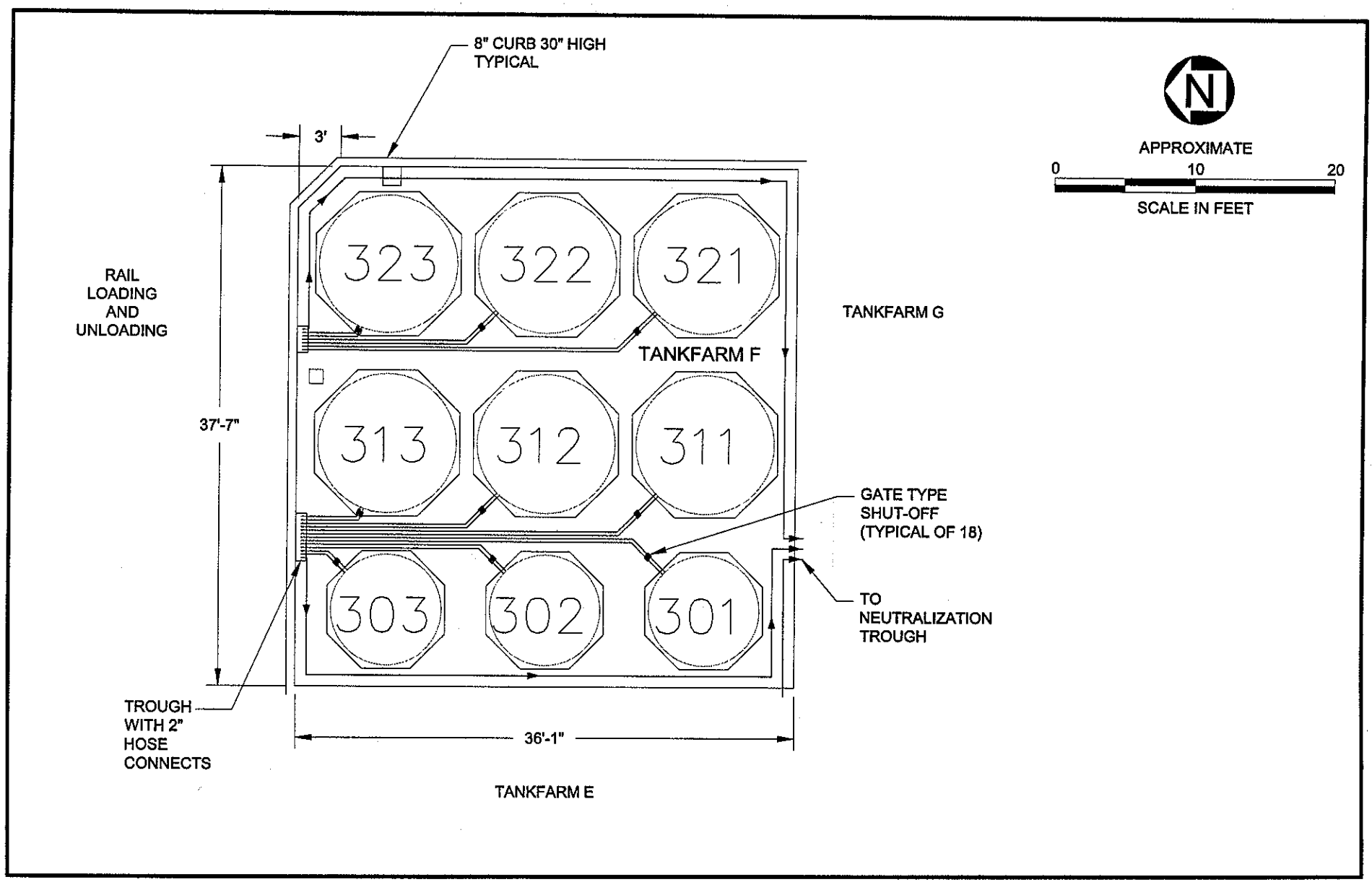

REFERENCE: BASEMAP PROVIDED BY:

ROMIC
ENVIRONMENTAL TECHNOLOGIES CORP.
ROMIC SOUTHWEST, CHANDLER, ARIZONA

URS

Proposed Tankfarm F

Romic - Southwest
Chandler, Arizona

Figure D-10

P:\ROMIC\CADD\FIGURES\A16435.DWG 02-04-05
XREF: P:\ROMIC\CADD\FIGURES\ROMIC-SITE.DWG

METRO
ENVIRONMENTAL
SERVICES, INC.

1256-B West Brooks Street, Ontario, CA 91762
Tel: (909) 983-3848 Fax: (909) 983-3498

LSI PN: 2K502 Tank 132 & tank 136 **Issued: 02/12/05**
Project Name: Romic Environmental Technologies Corporation
Project Location: ROMIC Southwest, Chandler, Arizona.

Table of Contents: **Page No.**

1	Scope of work, design loads and tank data	1
2	Seismic and wind analysis for overturning moment	2
3	Design new brace beam, support column, base plate and anchor bolts	3
	Attach two page of Hilti Kwik II bolt technical data	

Registered Professional Engineer (Civil)
CERTIFICATE No
31521
WANTHONG
STEVENSON
LIM
Date Signed 2/6/05
ARIZONA U.S.A.

SCOPE OF WORK: **Tank Designation:** **TK 132 and T 136.**

- Analyzed existing anchorage for 8'-0" Diameter by 11'-0" highPolyethylene tank setting inside of a 12'-0" diameter 6'-0" high containment tank
- Design brace beam, support column, anchor bolts and base plate.

DESIGN LOADS:

2000 International Building Code. 80 MPH wind, Seismic Use group II

WIND: F= Qz * G * Cf * Af

Where Qz = 0.00256 Kz Kzt Kd V^2 I

Qz = 0.00256*0.9*1.0*0.95*90^2*1.0 = 17.73 psf

F wnd = 2532 lbs.

M otm = F wind * H otm = 13925 lbs-ft

H =	11	ft
D =	8	ft
Kz =	0.9	Tbl 6-3 Case2
Kzt =	1	Tbl 6-4 Flat
Kd =	0.95	Tbl 6-4
V =	90	MPH Fig 6-1
I =	1	Tbl 6-1
For H/D =	1.375	
Cf =	1.4	Tbl 6-19
Gf =	0.85	Sec 6.5.8
Af =	120	Sq. Ft.
H otm =	5.5	ft

Location: Chandler State: Arizona

From Fig. 1615(1): Ss = 0.21 g

From Fig. 1615(2): S1 = 0.063 g

Sds = 0.67 Fa Ss = 0.224 W

Siteclass: D

Fa =	1.6	Tbl 1615.1.2(1)
R =	3	Tbl 1622.2.5(1)
Omega =	2	Tbl 1622.2.5(1)
Ie =	1.25	Tbl 1622.2.5(2)
W =	50000	lbs

V seismic = Cs W Eq. 16-34

= 0.093 W

Cs = Sds /R * I = 0.0933

Cs min=0.044SdsI = 0.0123

Use Cs = 0.0933

Vsimplified = 1.2 Sds W / R = 0.090 W

Vnonstr = 0.14 Sds Ie = 0.039 W

Cs min nonstr = 0.8S1 I / R = 0.021 W

Vs rigid nonstr = 0.3 Sds I W = 0.084 W

Use Vs = 0.093 W

Vs asd = **0.067 W**

Overturning Moment = Vs W * 1.2 sloshing * H otm = **22000** lbs-ft **Seismic Control**

Check existing anchorage according to API 650 Appendix E - Seismic design of Storage Tanks

Given information:

Material:	High Density Polethylene
Thickness:	0.88
Concrete slab thickness:	Min 6"
Full Tank +wt tank:	49000 lbs
Agitator:	0 lbs
Misc valves and structures:	1000 lbs

Seismic Analysis per API-650 Appendix E

Seismic zone, Z = (Zone 4=0.4,zone 3=0.3,zone 2=0.2,zone 1=0.075)		0.40	
Seismic Importance factor, Is = (Max I = 1.5, **normally I = 1.0**)		1.25	
Site coefficient from soil type, s = (S4=2, **S3=1.5**, S2=1.2, S1=1.0)		1.50	
Spcific gravity of liquid, **G** =		1.4	
Tank diameter, **D** =		8.00	ft
Height of tank, **Ht** =		11.00	ft
Fill height from top of floor, **H** =		11.00	ft
Weight of content, **Wt** = 22/7*(D/2)^2*H*62.4pcf/1000 =		48.32	kips
Weight of shell, uncorroded,**Ws**=		1.000	kips
Weight of roof, **Wr'** =		0.500	kips
Roof equipment load in seismic, **We** =		0.50	kips
Ratio of **D / H** =		0.73	
Weight or roof & equipment load, **Wr** = Wr' + We =		1.00	Kips
Height of center of gravity of shell, **Xs** = H / 2 =		5.50	ft
From Figure E-2 Effective masses, **W1 / Wt** =	*0.870*	0.87	
Contents in unison w/ shell, **W1** = Wt * (W1 / Wt) =		42.06	Kips
From Figure E-2 Effective masses, **W2 / Wt** =	*0.186*	0.19	
First sloshing mode contents, **W2** = Wt * (W2 / Wt) =		8.99	Kips
From Figure E-3 Centroids of seismic forces, **X1 / H** =	*0.431*	0.43	
Height to centroid, **X1** = H * (X1 / H) =		4.74	
From Figure E-3 Centroids of seismic forces, **X2 / H** =	*0.776*	0.78	
Height to centroid, **X2** = H * (X2 / H) =		8.54	
From Figure E-4 Factor k, k =	*0.577*	0.58	
Natural period of first mode, **T** = k * (D)^0.5 =		1.63	seconds
Lateral force coefficient, **C1** = **0.6**		0.24	
Lateral force coefficient, **C2** = **C2 = 0.3S/T =**		0.28	

Base shear **Vs** = Z * I *(C1 * (Ws + Wr + W1) + C2 * W2) =	6.53 Kips
Overturning, **Mot** = Z * I *(C1*Ws*Xs + C1*Wr*Ht + C1*W1*X1 + C2*W2*X2)=	**35.96** K-ft
Friction resistance from contents,shell, roof steel, **Ffric**=0.4 *(Wt+Ws+Wr') =	19.93 Kips
Factor of safety for sliding, **FSs** = Fric / Vs =	**3.05 > 1.5 O.K.**

Calculate resistance load against overturning:

Yield strength of tank material, **Fy** =		6.00	ksi
Thickness of bottom plate, **tb** = max (tf -co), thickness of floor or 0.25 =		0.88	
Wt of contents allow for OT calc. per cicumference,**WL**=7.9 tb(Fby G H)^0.5=		2101.22	plf
Max allowable for WL = 1.25 G H D = 154 plf	**Use:**	154.00	plf
Resistance to OT by contents, **Pr** = 22/7 * D * WL =		3.87	Kips
Resistance to OT by shell and roof, **Psr** = Ws + Wr =		2.00	Kips
Total resistance to OT moment, **Mr** = (Pr + Psr) * D / 2 =		23.49	k-ft

Mot > Mr, Anchorage required

Wind analysis per API 650 section 3.11 Wind load on Tanks

Based on 30 psf on vertical plane surface or 22 psf on projected area of cylindrical surface

Wind pressure, **qw** =		22.00	psf
Base shear from wind, **Vw** = qw * Ht * D =		1.94	Kips
Overturning due to wind, **Motmw** = Vw * Ht / 2 =		10.65	K-ft

Wind pressure from 2001CBC, **Pw** = Ce Cq qs Iw =				21.66 psf
For 70 MPH wind, Exp. C Where	22' Ce =	1.15	Cq =	1.30
	70mph qs=	12.6	Iw =	1.15
Overturning due to wind from 2001CBC, **Motmw** = Pw * Ht * D * Ht / 2 =				**10.48** k-ft

Since Resistance to Overturning of tank <seismic or wind overturning, anchorage req'd.

Design braced beam, support column, base plate and anchor bolts.

Overturning, Mot = Z * I *(C1*Ws*Xs + C1*Wr*Ht + C1*W1*X1 + C2*W2*X2)=		35.96 k-ft
Base shear Vs = Z * I *(C1 * (Ws + Wr + W1) + C2 * W2) =		6.53 Kips

Design an anchorage steel frame for overturning:

Sx min = M* 12* .75/ (.6*36) =		11.72 in^3

Use W 8 x 18 brace beam w/ W8x18 column. Fy = 36 ksi

Shear weld at 3/4" thick cap plate =	6.53 / (.928*3*4/3) =	1.76 in.
1/4" Weld at base =	M /2 * 12 * .75 /(bd + d^2 / 3) = b= 5.25, d = 8.125	2.50 kli
Cap of 3/16" fillet weld =	.928*4 =	3.712 kli/in
Tension on the base plate =	M * 12 /(8.125+ 2+2) / 6 bolts =	5.93 Kip < 6
Shear on 1" diameter bolts =	6.53 / 12 bolts =	0.54 Kips<9.2
Combine shear and tension =	(.54 / 9.2)^(5/3) + (5.93/ 6)^(5/3) =	0.990 < 1.33
Base plate thk min =	(6*3*5.93*2*.75/(10*.75*36))+D65^.5 =	0.593 in
Cap of pullout cone fr 3 bolts =	.55*.65*(22/7*10^2/4)*(3000)^0.5*4/3*3*3	26.59 **Kips O.k.**

Use: **Cap plate 3/4" x 8 x 9 w/ 3/16" fillet weld, weld flange to cap plate.**

Use: **Base plate 3/4" x 10 x 1'- 4" w/ (6) 1" dia. Hilti Kwik Bolts II, 6" embedment**

Kwik Bolt II Expansion Anchor

4.3.3.1 PRODUCT DESCRIPTION

The Kwik Bolt II is a stud type expansion anchor with a single piece wedge that performs as three independent wedges if necessary to provide consistent performance in a wide variety of medium-duty applications. Applicable base materials include concrete, lightweight concrete and grout-filled block.

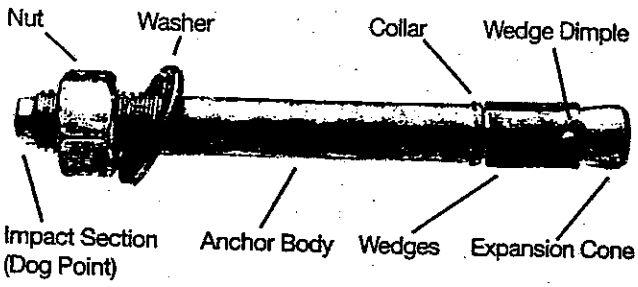

Product Features

- Impact section (Dog Point) prevents thread damage during installation
- Independent 3-piece wedge with dimples help prevent anchor from spinning during installation
- Length identification code facilitates quality control & inspection after installation
- Anchor size is same as drill bit size for easy installation
- Comprehensive performance testing to provide high & consistent performance in concrete, light-weight concrete & grout filled block base materials
- Mechanical expansion allows immediate load application
- Can be installed in bottomless hole, which allows the anchor to be driven flush with the surface after use. Eliminates cutting bolt heads.
- Can be installed through the fixture, improving productivity
- Comprehensive product offering includes many head styles, sizes, carbon steel and stainless steel materials for a variety of applications

Guide Specifications

Expansion Anchors	Expansion anchors shall be stud type with a single piece three section wedge and zinc plated in accordance with ASTM B633. The anchors must meet the description in Federal Specification FF-S-325, Group II, Type 4, Class I for concrete expansion anchors. Anchors shall be Hilti Kwik Bolt II as supplied by Hilti, Inc., P.O. Box 21148, Tulsa, OK 74121.
Installation	Anchors to be installed in holes drilled with Hilti carbide tipped drill bits or matched tolerance diamond core bits. Anchors shall be installed per manufacturer's recommendations.

Listings/Approvals

- Underwriters Laboratory No. 203 "Pipe Hangers" (3/8"-3/4" diameters)
- International Conference of Building Officials (ICBO ES): Evaluation Report No. 4627, KB II
- International Conference of Building Officials (ICBO ES): Evaluation Report No. 5224, HCKB
- Southern Building Code Congress (SBCCI): Report No. 9930
- City of Los Angeles (COLA): Research Report No. 24946
- Conforms to the description in Federal Specification FF-S-325, Group II, Type 4, Class 1
- Factory Mutual (FM) KB II 3/8" x 2 1/4" w/Rod Coupler
- Metro-Dade County Approval 98-0901.13

4.3.3.2 MATERIAL SPECIFICATIONS

	MECHANICAL PROPERTIES	
	f_y ksi (MPa)	min. f_u ksi (MPa)
Carbon Steel KB II studs conform to ASTM A510 with chemical composition of AISI 1038 except countersunk KB II, KB 3/4" x 12", KB II 1" x 6", KB II 1" x 9" and KB II 1" x 12" which conform to ASTM A108 with chemical composition of AISI 11L41	41 (282) 75 (517)	75 (517) 90 (620)
Wedges are manufactured from AISI 1010 carbon steel, except KB II 3/4" x 12", KB II 1" x 6", KB II 1" x 9" and KB II 1" x 12" wedges which conform to chemical composition of AISI 304	N/A	N/A
Nuts are carbon steel conforming to ASTM A563 Grade A and meet dimensional requirements of ANSI B18.2.2	N/A	N/A
Washers are carbon steel conforming to SAE 1005-1033 and meet dimensional requirements of ANSI 18.22.1 Type A Plain	N/A	N/A
All carbon steel parts are zinc plated in accordance with ASTM B633, Type III Fe/Zn 5	N/A	N/A
Stainless Steel KB II studs conform to ASTM A276 or ASTM A493 with chemical composition of either AISI 304 or 316 1/4" thru 9/16" over 9/16"	76 (524) 64 (441)	90 (620) 76 (524)
Stainless steel wedges are of the same material grade as bolts or superior.		
Nuts are stainless steel conforming to ASTM F594 with chemical composition of either AISI 304 or 316 and meeting dimensional requirements of ANSI B18.2.2 to conform with stud material		
Washers are AISI 304 or 316 stainless steel conforming to ASTM A240 to conform with stud material		

Carbon Steel Kwik Bolt II Allowable Loads in Concrete

Anchor Diameter in. (mm)	Embedment Depth in. (mm)	2000 psi (13.8 MPa)		3000 psi (20.7 MPa)		4000 psi (27.6 MPa)		6000 psi (41.4 MPa)	
		Tension lb (kN)	Shear lb (kN)	Tension lb (kN)	Shear lb (kN)	Tension lb (kN)	Shear lb (kN)	Tension lb (kN)	Shear lb (kN)
1/4 (6.4)	1 1/8 (29)	270 (1.2)	430 (1.9)	330 (1.5)	430 (1.9)	380 (1.7)	430 (1.9)	470 (2.1)	430 (1.9)
	2* (51)	560 (2.5)	530 (2.4)	590 (2.6)	530 (2.4)	630 (2.8)	530 (2.4)	670 (3.0)	530 (2.4)
	3 3/4* (95)	670 (3.0)		670 (3.0)		670 (3.0)			
3/8 (9.5)	1 5/8 (41)	530 (2.4)	990 (4.4)	650 (2.9)	1040 (4.6)	750 (3.3)	1100 (4.9)	850 (3.8)	1100 (4.9)
	2 1/2* (64)	1200 (5.3)	1470 (6.5)	1290 (5.7)	1470 (6.5)	1370 (6.1)	1470 (6.5)	1550 (6.9)	1470 (6.5)
	4 1/4* (108)	1330 (5.9)		1390 (6.2)		1440 (6.4)			
1/2 (12.7)	2 1/4 (57)	1170 (5.2)	1940 (8.6)	1310 (5.8)	1970 (8.8)	1450 (6.4)	1970 (8.8)	1730 (7.7)	1970 (8.8)
	3 1/2* (89)	1870 (8.3)	2450 (10.9)	2130 (9.5)	2450 (10.9)	2400 (10.7)	2450 (10.9)	2800 (12.5)	2450 (10.9)
	6* (152)	2080 (9.3)		2310 (10.3)		2530 (11.3)			
5/8 (15.9)	2 3/4 (70)	1600 (7.1)	3070 (13.7)	1870 (8.3)	3070 (13.7)	2130 (9.5)	3070 (13.7)	2670 (11.9)	3070 (13.7)
	4** (102)	2400 (10.7)	3840 (17.1)	2850 (12.7)	3840 (17.1)	3290 (14.6)	3840 (17.1)	4190 (18.6)	3840 (17.1)
	7** (178)	3200 (14.2)		3470 (15.4)		3730 (16.6)			
3/4 (19.1)	3 1/4 (83)	1970 (8.8)	4140 (18.4)	2320 (10.3)	4140 (18.4)	2670 (11.9)	4140 (18.4)	3200 (14.2)	4140 (18.4)
	4 3/4** (121)	2930 (13.0)	5120 (22.8)	4130 (18.4)	5120 (22.8)	4800 (21.4)	5120 (22.8)	5870 (26.1)	5120 (22.8)
	8** (203)	4000 (17.8)		4930 (21.9)		5870 (26.1)		6320 (28.1)	
1 (25.4)	4 1/2 (114)	3330 (14.8)	7070 (31.4)	4050 (18.0)	7600 (33.8)	4670 (20.8)	8140 (36.2)	5070 (22.6)	9200 (40.9)
	6 (152)	4930 (21.9)	9200 (40.9)	6000 (26.7)	9200 (40.9)	7070 (31.4)	9200 (40.9)	8400 (37.4)	
	9 (229)	6670 (29.7)		7670 (34.1)		8670 (38.6)		10670 (47.5)	

* Values shown are for a shear plane acting through the anchor bolt body. When the shear plane is acting through the anchor bolt threads, reduce the shear values by 20%.

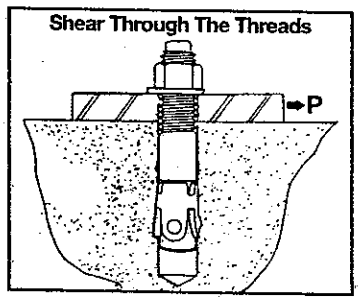

** Values shown are for a shear plane acting through the anchor bolt body. When the shear plane is acting through the anchor bolt threads, reduce the shear value by 12%.

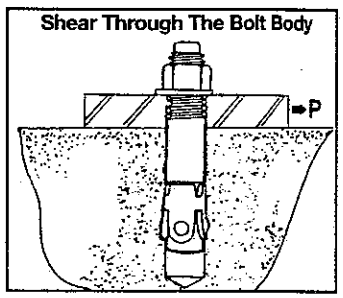

All other values shown are for shear plane acting through either body or threads.

TANK T-132 AND T136

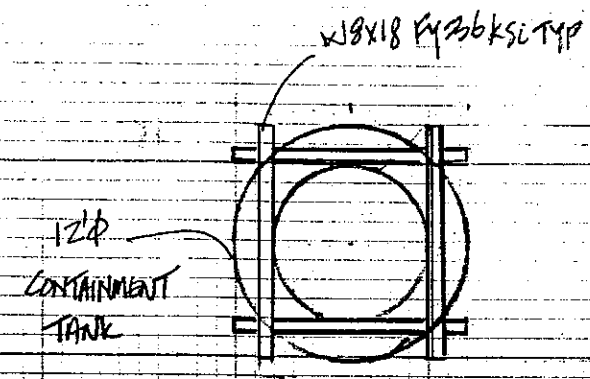

PLAN VIEW

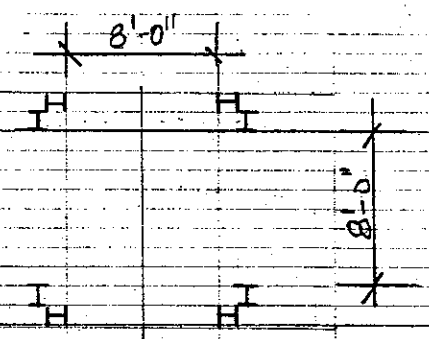

COLUMN ORIENTATION

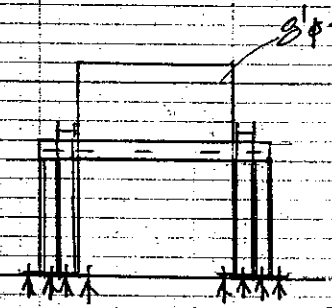

SECTION VIEW

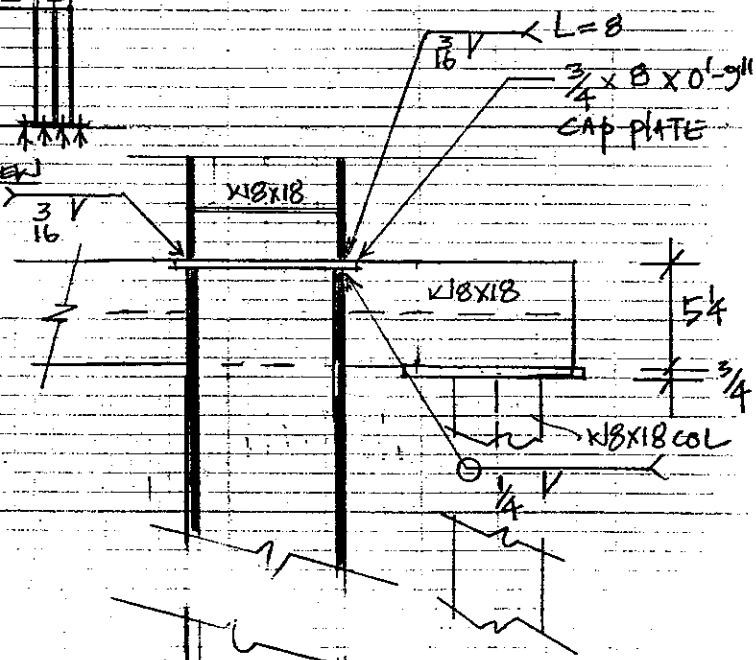

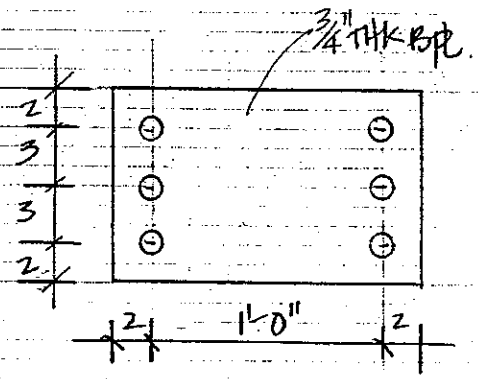

BASE PLATE

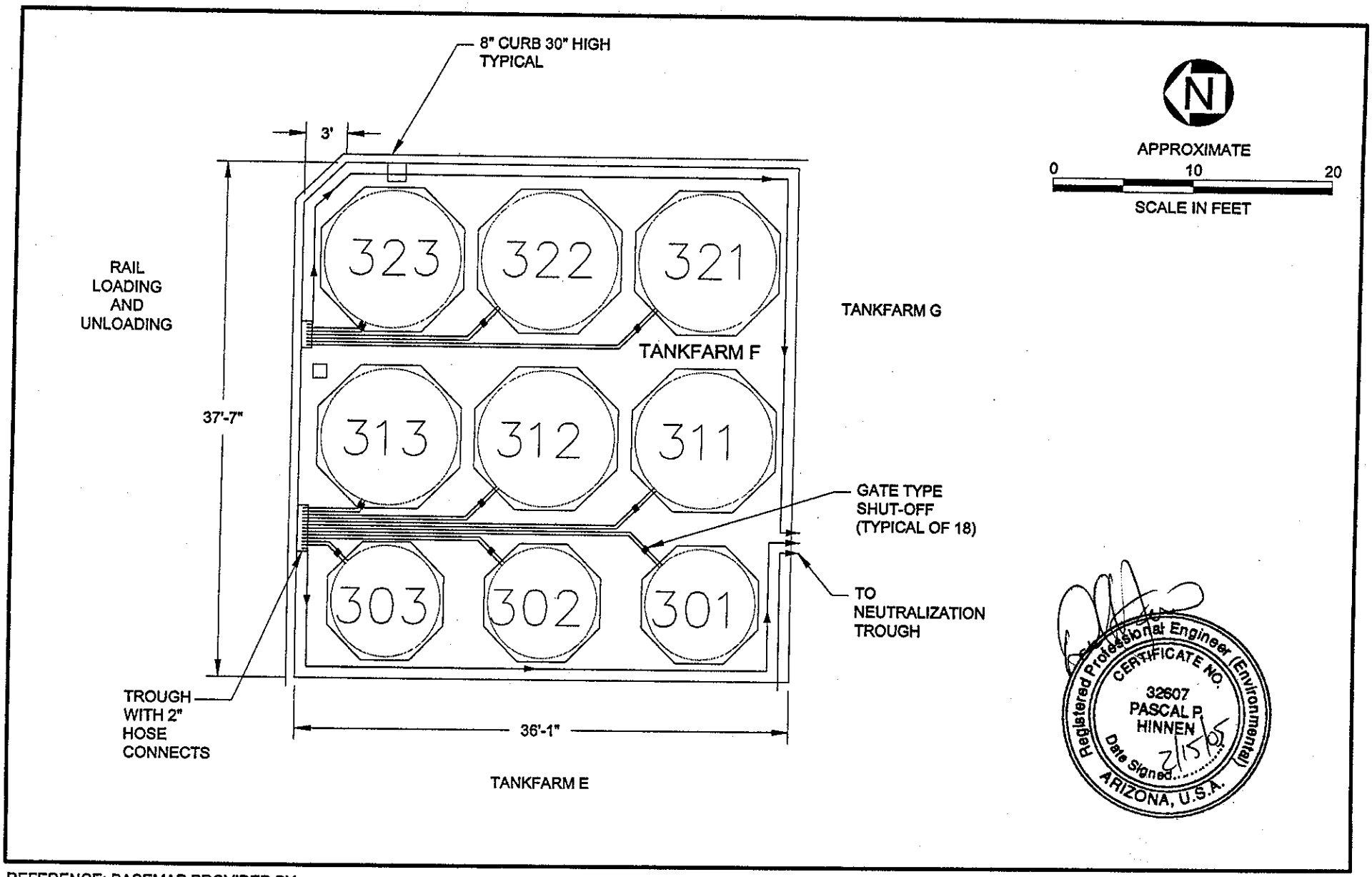

REFERENCE: BASEMAP PROVIDED BY:

ROMIC
ENVIRONMENTAL TECHNOLOGIES CORP.
ROMIC SOUTHWEST, CHANDLER, ARIZONA

URS

Proposed Tankfarm F

Romic - Southwest
Chandler, Arizona

Figure D-10

P:\ROMIC\CADD\FIGURES\A16435.DWG 02-04-05
XREF: P:\ROMIC\CADD\FIGURES\ROMIC-SITE.DWG

Project Name: ROMIC SOUTHWEST – Chandler, AZ

Tank I.D.No. TK–108 and TK–109

Location: Tank Farm D

Service: Waste Receiving/Storage

Contents: Organic/aqueous

Size: 5,800 gal. S.G.: 1.0–1.6

Fill GPM: 250 Empty GPM: 250

Support: 4 Legs

Insulation: n/a Agitator: n/a

Auxiliary Equip: Cooling Coils

Weight: 4,000± lbs. Empty

81,400± lbs. Full

Temp (°F) Ambient

Pressure (Psig): ATM

Seismic Zone: 2

Material: Carbon Steel

Method of Construction: Welded

CONNECTION

No.	Size	Type	Rating	Function
A	4"	RF	150#	BOTTOM NOZZLE
B	3"	RF	150#	SIDE OUTLET
C	3"	RF	150#	VENT
D	3"	RF	150#	SPARE
L	3"	RF	150#	LEVEL INDICATOR
M_1	24"	FF	n/a	TOP MANWAY
M_2	24"	FF	n/a	SIDE MANWAY
S	1"	HC	3000#	SAMPLE PORT

REMARKS

1. Standard 1:12 sloped top.
2. Bottom cone with 70.2° included angle.
3. Tank supported on 4 legs.
4. See Brown Tank & Steel W/O–3882.

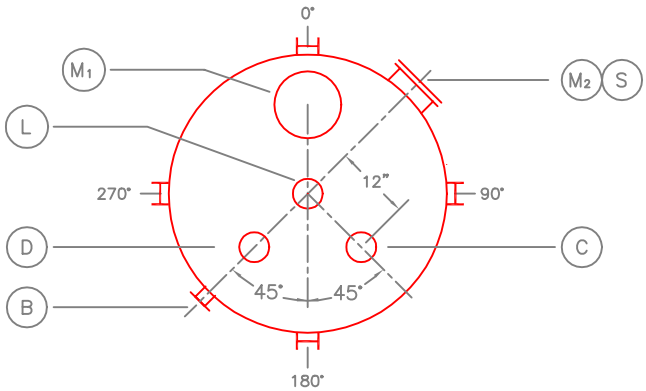

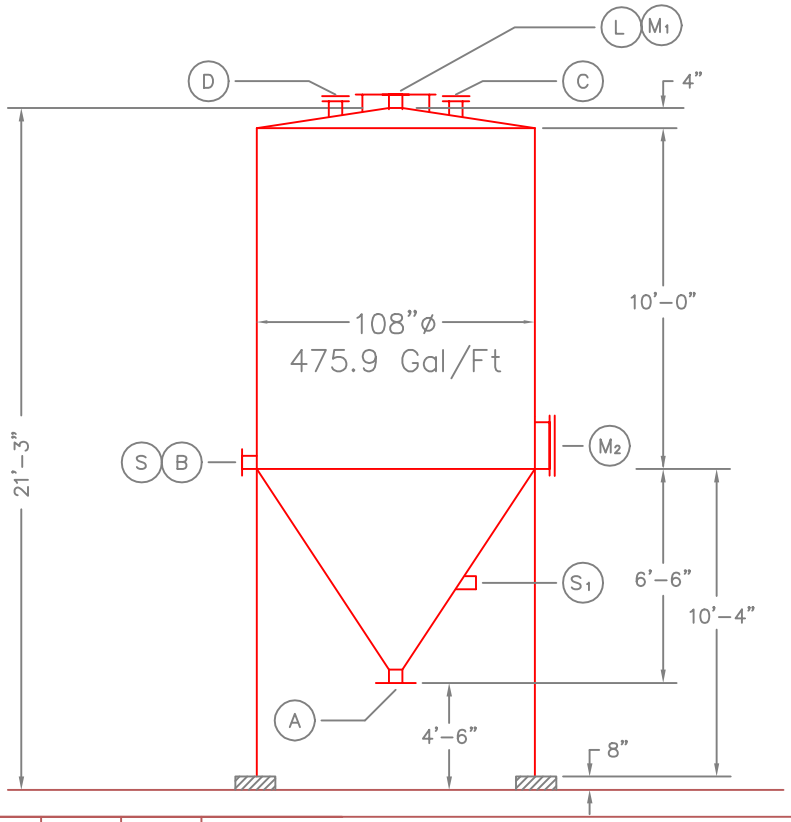

Rev No.	Revision	By	Date	Apprvd	Date
1	ADD TANKS 106 TO 108	MW	11–13–95		
2	Update for 2004 Part B	RP	4–14–04	WK	4–04
3	Revise Temperature rating	RP	8–22–05	MS	8–05

ROMIC
ENVIRONMENTAL TECHNOLOGIES CORP.
ROMIC SOUTHWEST, CHANDLER, ARIZONA

Drawing Number Tk 108 and Tk 109

Project Name: ROMIC SOUTHWEST – Chandler, AZ

Tank I.D.No. TK–137 and TK–138

Location: Tank Farm D

Service: Fuels/Solvents

Contents: Fuels

Size: 19,500 gal. S.G.: 1.0–1.4

Fill GPM: 250 Empty GPM: 250

Support: Skirt

Insulation: n/a Agitator: 10 HP

Other: Agitator w/ Baffles Optional

Weight: 8,000± lbs. Empty

235,700± lbs. Full

Temp (°F) AMB.

Pressure (Psig): ATM.

Seismic Zone: 2

Material: Carbon Steel

Method of Construction: Welded

CONNECTION

No.	Size	Type	Rating	Function
A	4"	RF	150#	BOTTOM NOZZLE
B	4"	RF	150#	SIDE OUTLET
C	2 1/2"	RF	150#	VENT
D	4"	RF	150#	SPARE
E	12"	RF	150#	LEVEL INDICATOR
M	24"	FF	n/a	TOP MANWAY
S	1"	HC	3000#	SAMPLE PORT

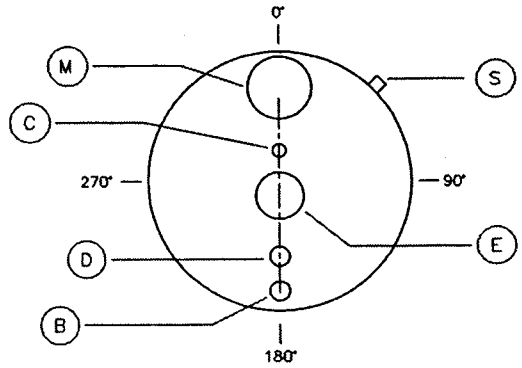

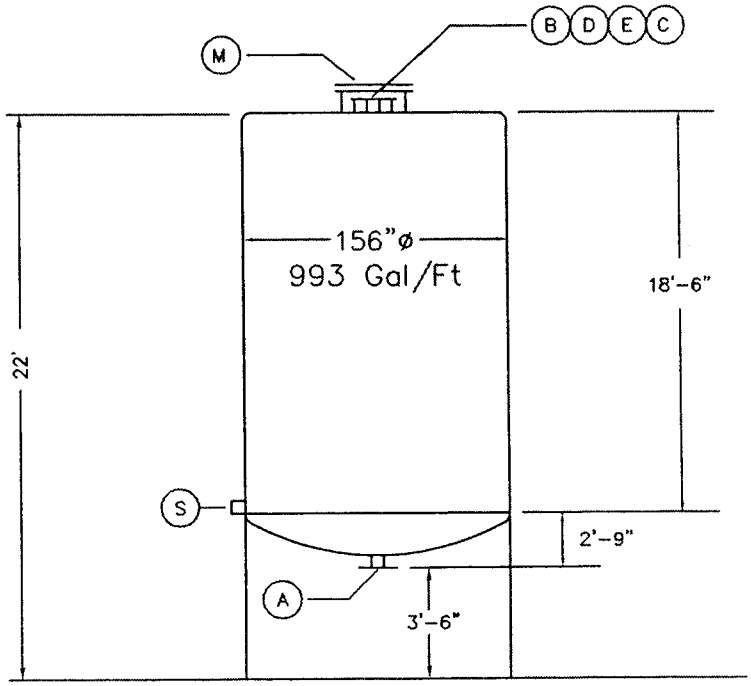

REMARKS

1. Standard Flat top.
2. Flanged and dished bottom
3. Tank supported on ring skirt.
4. See Brown Tank & Steel W/O–3882.

Rev No.	Revision	By	Date	Apprvd	Date
1	Update for 2001 Part B	RP	4–14–04	WK	4–04

ROMIC
ENVIRONMENTAL TECHNOLOGIES CORP.
ROMIC SOUTHWEST, CHANDLER, ARIZONA

Drawing Number TK 137 and TK 138

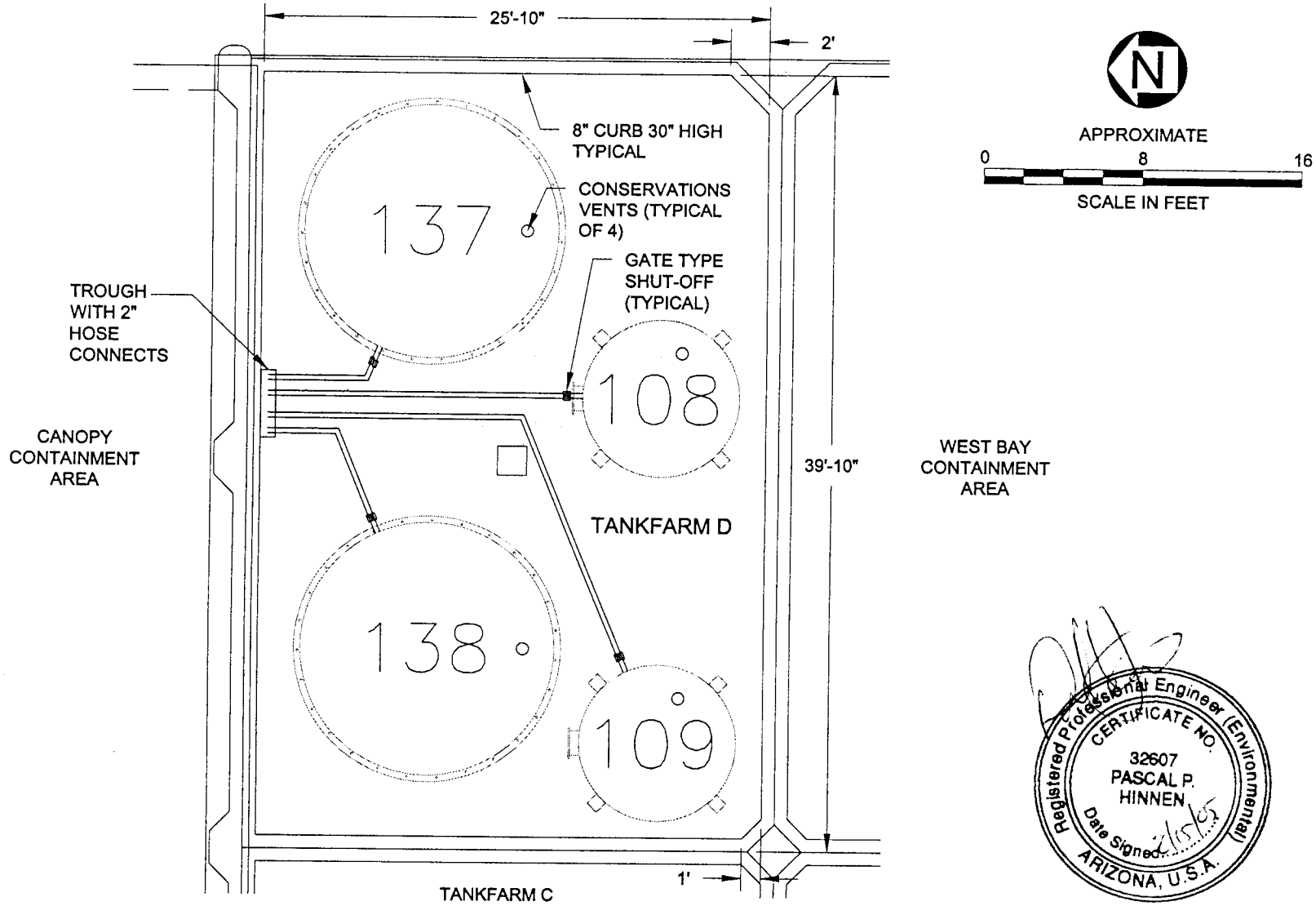

REFERENCE: BASEMAP PROVIDED BY:

ROMIC
ENVIRONMENTAL TECHNOLOGIES CORP.
ROMIC SOUTHWEST, CHANDLER, ARIZONA

URS

Proposed Tankfarm D

Romic - Southwest
Chandler, Arizona

Figure D-8

P:\ROMIC\CADD\FIGURES\A16433.DWG 02-04-05
XREF: P:\ROMIC\CADD\FIGURES\ROMIC-SITE.DWG

Project Name: ROMIC SOUTHWEST – Chandler, AZ

Tank I.D.No. TK–401 to TK–403

Location: Tank Farm E

Service: Waste Storage

Contents: Alkaline waste

Size: 4,100 gal. S.G.: 1.0–1.4

Fill GPM: 250 Empty GPM: 250

Support: Sloped Bottom

Insulation: n/a Agitator: n/a

Weight: 1,000± lbs. Empty

49,000± lbs. Full

Temp (°F) AMB.

Pressure (Psig): ATM.

Seismic Zone: 2

Material: High density polyethylene

Method of Construction: Molded

CONNECTION

No.	Size	Type	Rating	Function
A	4"	RF	150#	BOTTOM NOZZLE
B	4"	RF	150#	SIDE OUTLET
C	2 1/2"	RF	150#	VENT
D	4"	RF	150#	SPARE
E	12"	RF	150#	LEVEL INDICATOR
M	24"	FF	n/a	TOP MANWAY
S	1"	HC	3000#	SAMPLE PORT

REMARKS

1. Standard cone top
2. Sloped bottom

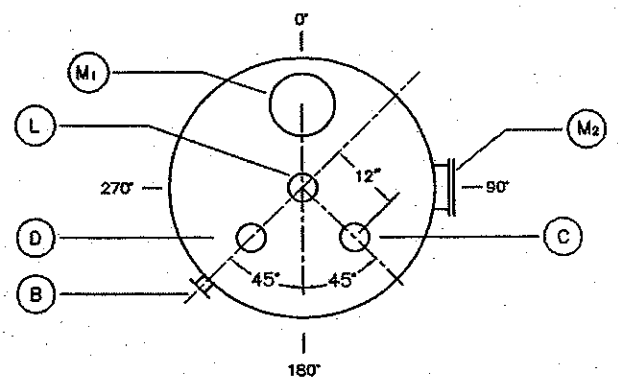

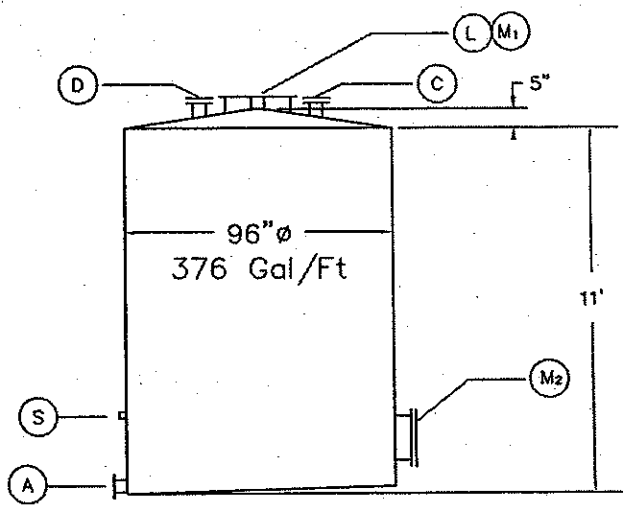

Rev No.	Revision	By	Date	Apprvd	Date
1	Update for 2004 Part B	RP	4–14–04	WK	4–04

ROMIC
ENVIRONMENTAL TECHNOLOGIES CORP.
ROMIC SOUTHWEST, CHANDLER, ARIZONA

Drawing Number TK–401 to TK–403

Project Name: ROMIC SOUTHWEST – Chandler, AZ

Tank I.D.No. TK–411 to TK–413

Location: Tank Farm E

Service: Waste Storage

Contents: Alkaline waste

Size: 8,500 gal. S.G.: 1.0–1.4

Fill GPM: 250 Empty GPM: 250

Support: Sloped Bottom

Insulation: n/a Agitator: n/a

Weight: 2,500± lbs. Empty

101,700± lbs. Full

Temp (°F) AMB.

Pressure (Psig): ATM.

Seismic Zone: 2

Material: High density polyethylene

Method of Construction: Molded

CONNECTION

No.	Size	Type	Rating	Function
A	4"	RF	150#	BOTTOM NOZZLE
B	4"	RF	150#	SIDE OUTLET
C	2 1/2"	RF	150#	VENT
D	4"	RF	150#	SPARE
E	12"	RF	150#	LEVEL INDICATOR
M	24"	FF	n/a	TOP MANWAY
S	1"	HC	3000#	SAMPLE PORT

REMARKS

1. Standard cone top
2. Sloped bottom

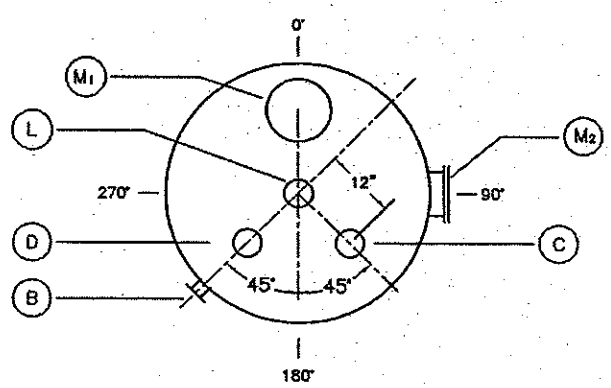

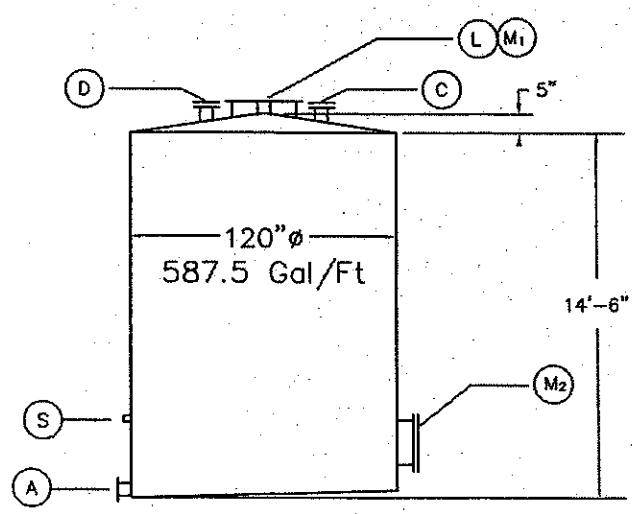

Rev No.	Revision	By	Date	Apprvd	Date
1	Update for 2004 Part B	RP	4–14–04	WK	4–04

ROMIC
ENVIRONMENTAL TECHNOLOGIES CORP.
ROMIC SOUTHWEST, CHANDLER, ARIZONA

Drawing Number TK–411 to TK–413

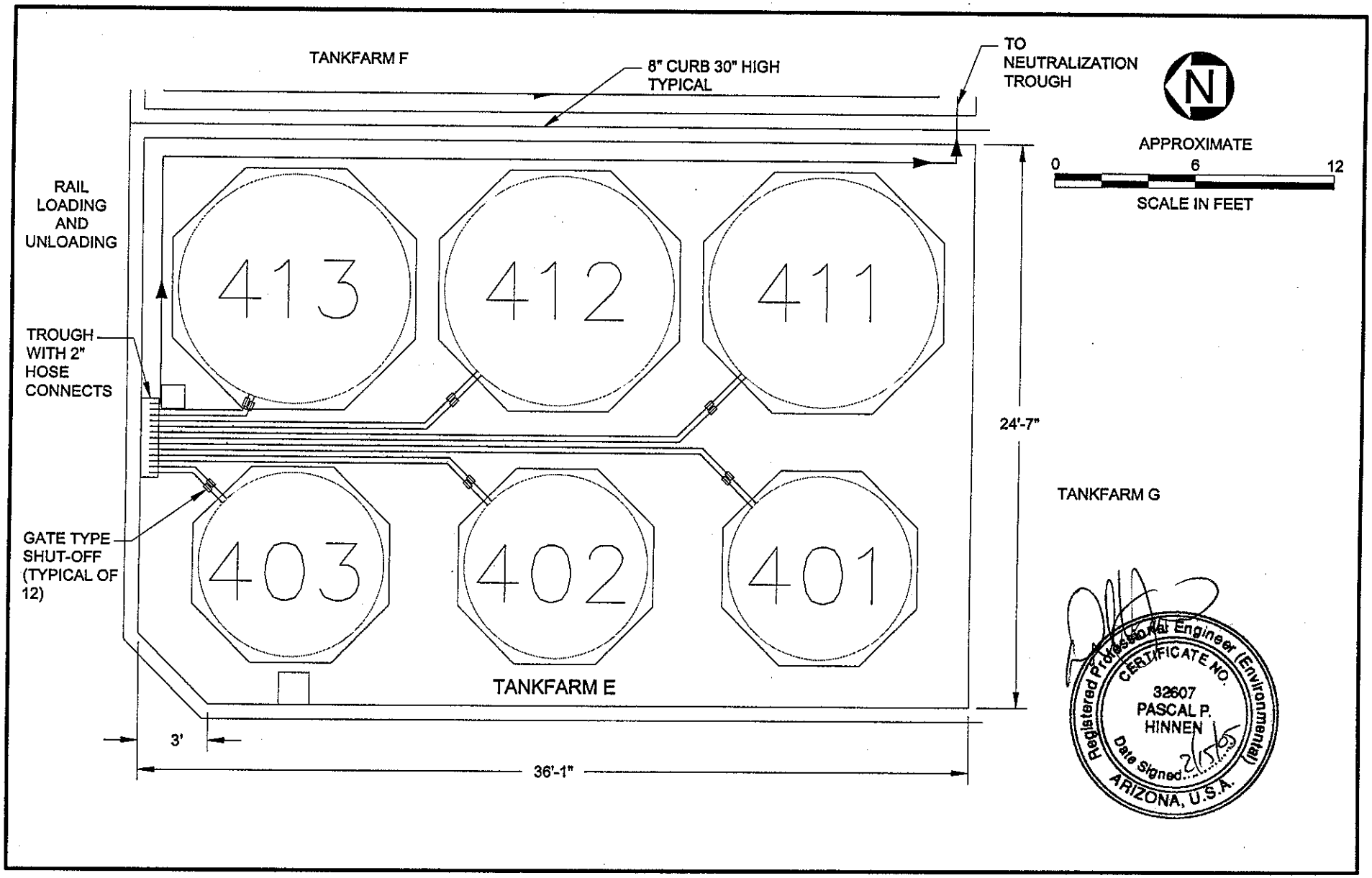

REFERENCE: BASEMAP PROVIDED BY:

ROMIC
ENVIRONMENTAL TECHNOLOGIES CORP.
ROMIC SOUTHWEST, CHANDLER, ARIZONA

URS

Proposed Tankfarm E

Romic - Southwest
Chandler, Arizona

Figure D-9

P:\ROMIC\CADD\FIGURES\A16434.DWG 02-04-05
XREF: P:\ROMIC\CADD\FIGURES\ROMIC-SITE.DWG

Project Name: ROMIC SOUTHWEST – Chandler, AZ

Tank I.D.No. TK–301 to TK–303

Location: Tank Farm F

Service: Waste Storage

Contents: Acid waste

Size: 4,100 gal. S.G.: 1.0–1.4

Fill GPM: 250 Empty GPM: 250

Support: Sloped Bottom

Insulation: n/a Agitator: n/a

Weight: 1,000± lbs. Empty

49,000± lbs. Full

Temp (°F) AMB.

Pressure (Psig): ATM.

Seismic Zone: 2

Material: High density polyethylene

Method of Construction: Molded

CONNECTION

No.	Size	Type	Rating	Function
A	4"	RF	150#	BOTTOM NOZZLE
B	4"	RF	150#	SIDE OUTLET
C	2 1/2"	RF	150#	VENT
D	4"	RF	150#	SPARE
E	12"	RF	150#	LEVEL INDICATOR
M	24"	FF	n/a	TOP MANWAY
S	1"	HC	3000#	SAMPLE PORT

REMARKS

1. Standard cone top
2. Sloped bottom

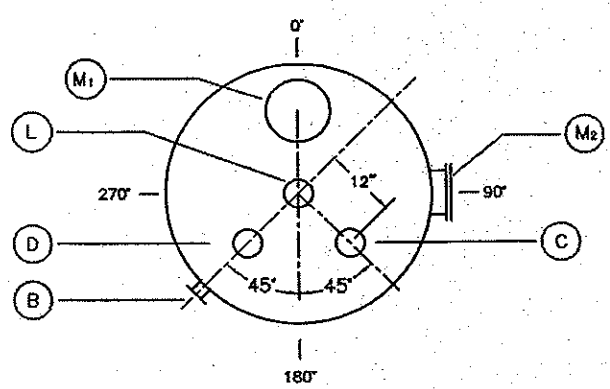

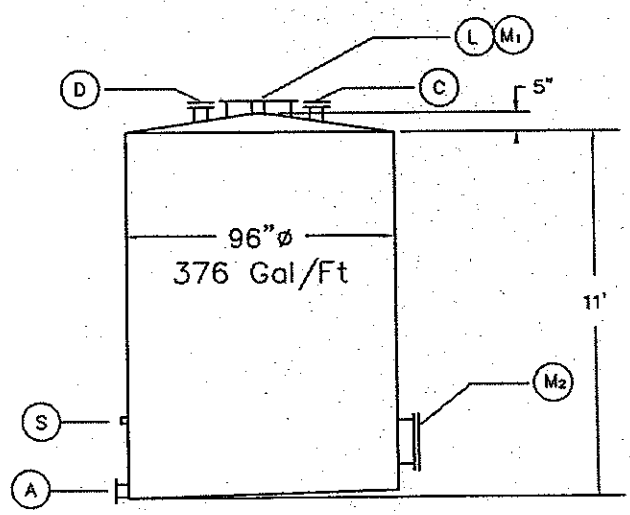

Rev No.	Revision	By	Date	Apprvd	Date
1	Update for 2004 Part B	RP	4–14–04	WK	4–04

ROMIC ENVIRONMENTAL TECHNOLOGIES CORP.
ROMIC SOUTHWEST, CHANDLER, ARIZONA

Drawing Number TK–301 to TK–303

Project Name: ROMIC SOUTHWEST – Chandler, AZ

Tank I.D.No. TK–311 to TK–313

Location: Tank Farm F

Service: Waste Storage

Contents: Acid waste

Size: 8,500 gal. S.G.: 1.0–1.4

Fill GPM: 250 Empty GPM: 250

Support: Sloped Bottom

Insulation: n/a Agitator: n/a

Weight: 2,500± lbs. Empty

101,700± lbs. Full

Temp (°F) AMB.

Pressure (Psig): ATM.

Seismic Zone: 2

Material: High density polyethylene

Method of Construction: Molded

CONNECTION

No.	Size	Type	Rating	Function
A	4"	RF	150#	BOTTOM NOZZLE
B	4"	RF	150#	SIDE OUTLET
C	2 1/2"	RF	150#	VENT
D	4"	RF	150#	SPARE
E	12"	RF	150#	LEVEL INDICATOR
M	24"	FF	n/a	TOP MANWAY
S	1"	HC	3000#	SAMPLE PORT

REMARKS

1. Standard cone top
2. Sloped bottom

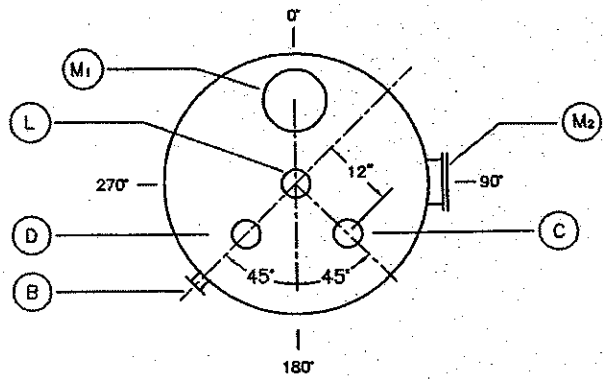

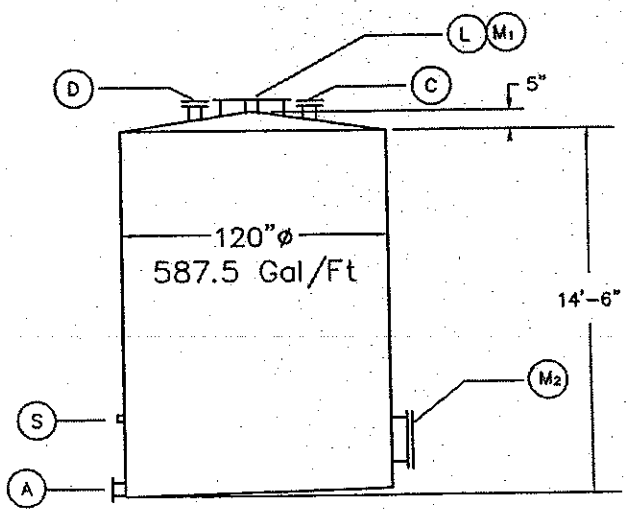

Rev No.	Revision	By	Date	Apprvd	Date
1	Update for 2004 Part B	RP	4–14–04	WK	4–04

ROMIC
ENVIRONMENTAL TECHNOLOGIES CORP.
ROMIC SOUTHWEST, CHANDLER, ARIZONA

Drawing Number TK–311 to TK–313

Project Name: ROMIC SOUTHWEST – Chandler, AZ

Tank I.D.No. TK–321 to TK–323

Location: Tank Farm F

Service: Waste Storage

Contents: Acid waste

Size: 8,500 gal. S.G.: 1.0–1.4

Fill GPM: 250 Empty GPM: 250

Support: Sloped Bottom

Insulation: n/a Agitator: n/a

Weight: 2,500± lbs. Empty

101,700± lbs. Full

Temp (°F) AMB.

Pressure (Psig): ATM.

Seismic Zone: 2

Material: High density polyethylene

Method of Construction: Molded

CONNECTION

No.	Size	Type	Rating	Function
A	4"	RF	150#	BOTTOM NOZZLE
B	4"	RF	150#	SIDE OUTLET
C	2 1/2"	RF	150#	VENT
D	4"	RF	150#	SPARE
E	12"	RF	150#	LEVEL INDICATOR
M	24"	FF	n/a	TOP MANWAY
S	1"	HC	3000#	SAMPLE PORT

REMARKS

1. Standard cone top
2. Sloped bottom

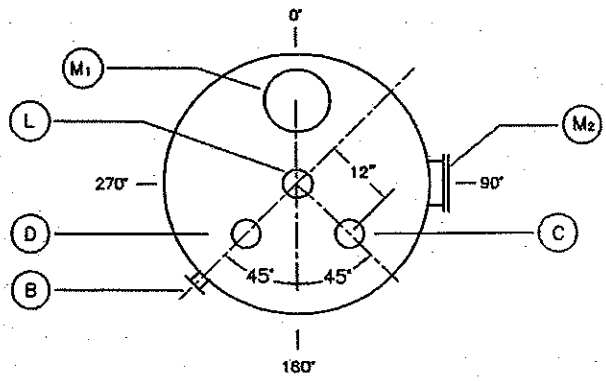

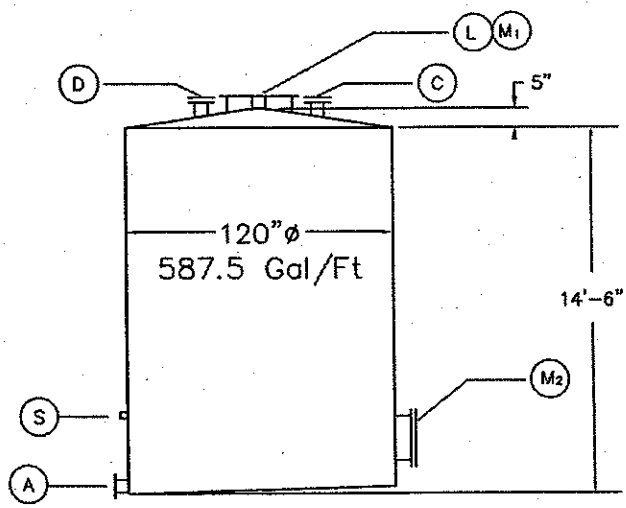

Rev No.	Revision	By	Date	Apprvd	Date
1	Update for 2004 Part B	RP	4–14–04	WK	4–04

ROMIC
ENVIRONMENTAL TECHNOLOGIES CORP.
ROMIC SOUTHWEST, CHANDLER, ARIZONA

Drawing Number TK–321 to TK–323

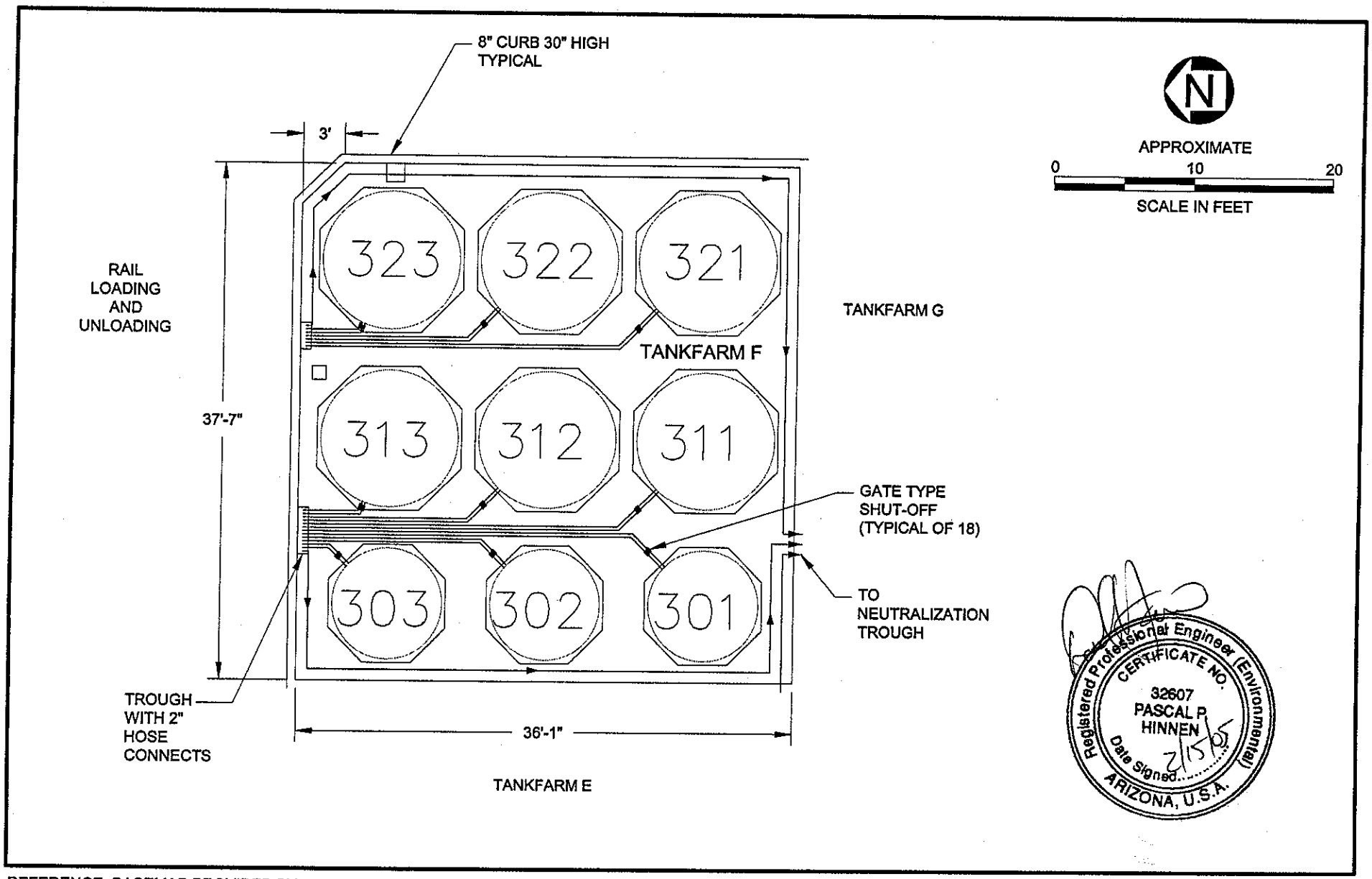

REFERENCE: BASEMAP PROVIDED BY:

ROMIC
ENVIRONMENTAL TECHNOLOGIES CORP.
ROMIC SOUTHWEST, CHANDLER, ARIZONA

URS

Proposed Tankfarm F

Romic - Southwest
Chandler, Arizona

Figure D-10

P:\ROMIC\CADD\FIGURES\A16435.DWG 02-04-05
XREF: P:\ROMIC\CADD\FIGURES\ROMIC-SITE.DWG

Project Name: ROMIC SOUTHWEST – Chandler, AZ

Tank I.D.No. TK-304 to TK-307

Location: Tank Farm G

Service: Waste Storage

Contents: Acid, Base, Aqueous, Oxidizer

Size: 4,100 gal. S.G.: 1.0–1.4

Fill GPM: 250 Empty GPM: 250

Support: Ring Skirt

Insulation: n/a Agitator: Yes

Weight: 1,000± lbs. Empty

49,000± lbs. Full

Temp (°F) AMB.

Pressure (Psig): ATM.

Seismic Zone: 2

Material: High density polyethylene

Method of Construction: Molded

CONNECTION

No.	Size	Type	Rating	Function
A	4"	RF	150#	BOTTOM NOZZLE
B	4"	RF	150#	SIDE OUTLET
C	2 1/2"	RF	150#	VENT
D	4"	RF	150#	SPARE
E	12"	RF	150#	LEVEL INDICATOR
L	4"	RF	150#	MIXER
M	24"	FF	n/a	TOP MANWAY
S	1"	HC	3000#	SAMPLE PORT

REMARKS

1. Standard cone top
2. Sloped bottom

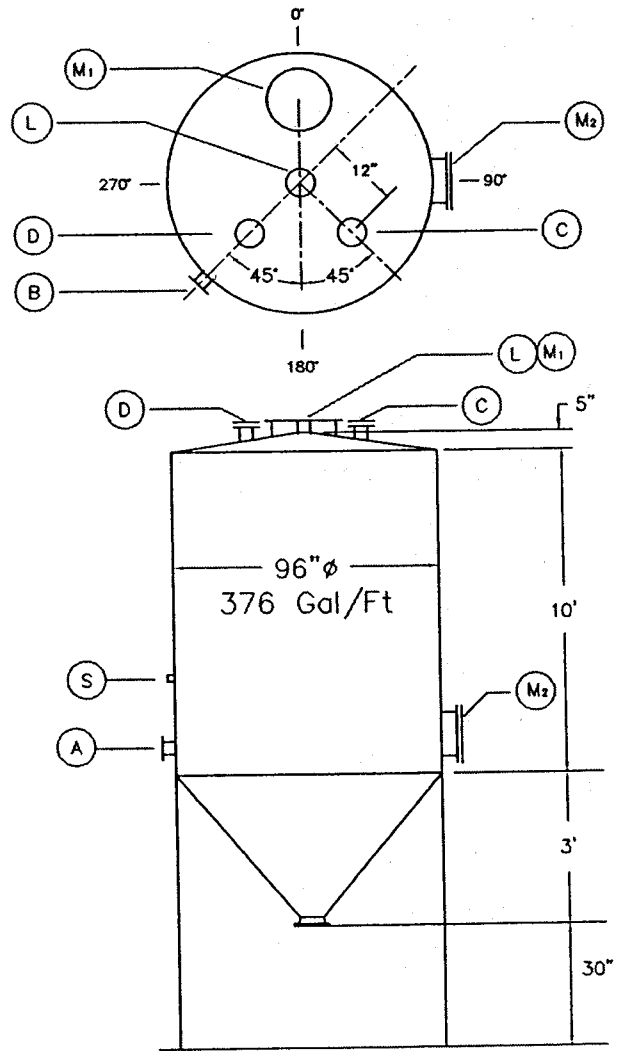

Rev No.	Revision	By	Date	Apprvd	Date
1	Update for 2004 Part B	RP	4-14-04	WK	4-04

ROMIC
ENVIRONMENTAL TECHNOLOGIES CORP.
ROMIC SOUTHWEST, CHANDLER, ARIZONA

Drawing Number TK-304 to TK-307

Project Name: ROMIC SOUTHWEST – Chandler, AZ

Tank I.D.No. _____

Location: _____

Service: _____

Contents: _____

Size: _____ gal. S.G.: _____

Fill GPM: _____ Empty GPM: _____

Support: _____

Insulation: _____ Agitator: _____

Weight: _____ lbs. Empty

_____ lbs. Full

Temp (°F) _____

Pressure (Psig): _____

Seismic Zone: _____

Material: _____

Method of Construction: _____

CONNECTION

No.	Size	Type	Rating	Function

REMARKS

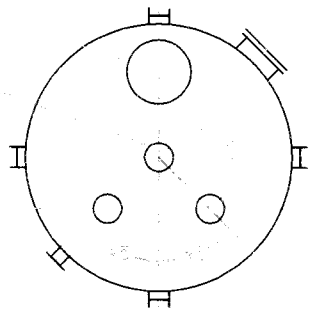

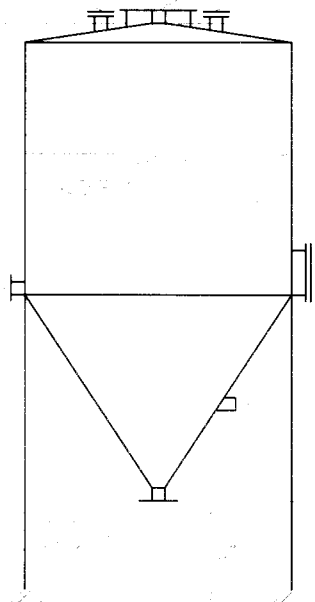

Rev No.	Revision	By	Date	Apprvd	Date

ROMIC
ENVIRONMENTAL TECHNOLOGIES CORP.
ROMIC SOUTHWEST, CHANDLER, ARIZONA

Drawing Number Tk 308 and Tk 309

Project Name: ROMIC SOUTHWEST – Chandler, AZ

Tank I.D.No. TK–511 to TK–512

Location: Tank Farm F

Service: Waste Storage

Contents: Wastewater

Size: 8,500 gal. S.G.: 1.0–1.4

Fill GPM: 250 Empty GPM: 250

Support: Sloped Bottom

Insulation: n/a Agitator: n/a

Weight: 2,500± lbs. Empty

101,700± lbs. Full

Temp (°F) AMB.

Pressure (Psig): ATM.

Seismic Zone: 2

Material: High density polyethylene

Method of Construction: Molded

CONNECTION

No.	Size	Type	Rating	Function
A	4"	RF	150#	BOTTOM NOZZLE
B	4"	RF	150#	SIDE OUTLET
C	2 1/2"	RF	150#	VENT
D	4"	RF	150#	SPARE
E	12"	RF	150#	LEVEL INDICATOR
M	24"	FF	n/a	TOP MANWAY
S	1"	HC	3000#	SAMPLE PORT

REMARKS

1. Standard cone top
2. Sloped bottom

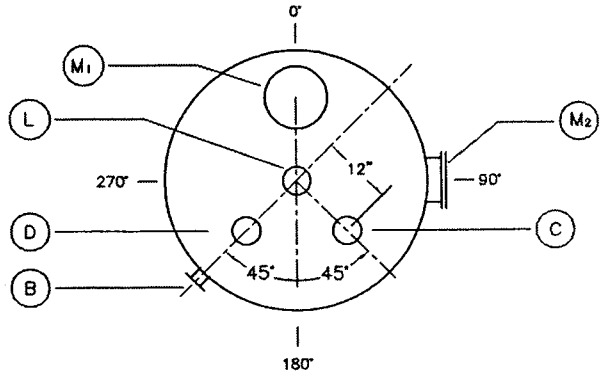

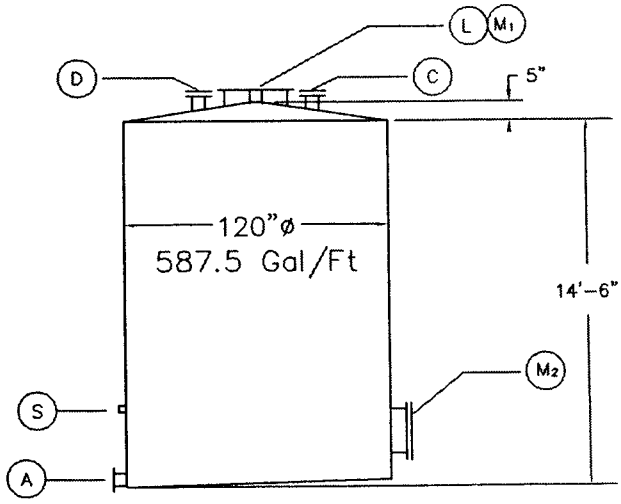

Rev No.	Revision	By	Date	Apprvd	Date
1	Update for 2004 Part B	RP	4–14–04	WK	4–04

ROMIC
ENVIRONMENTAL TECHNOLOGIES CORP.
ROMIC SOUTHWEST, CHANDLER, ARIZONA

Drawing Number TK–511 to TK–512

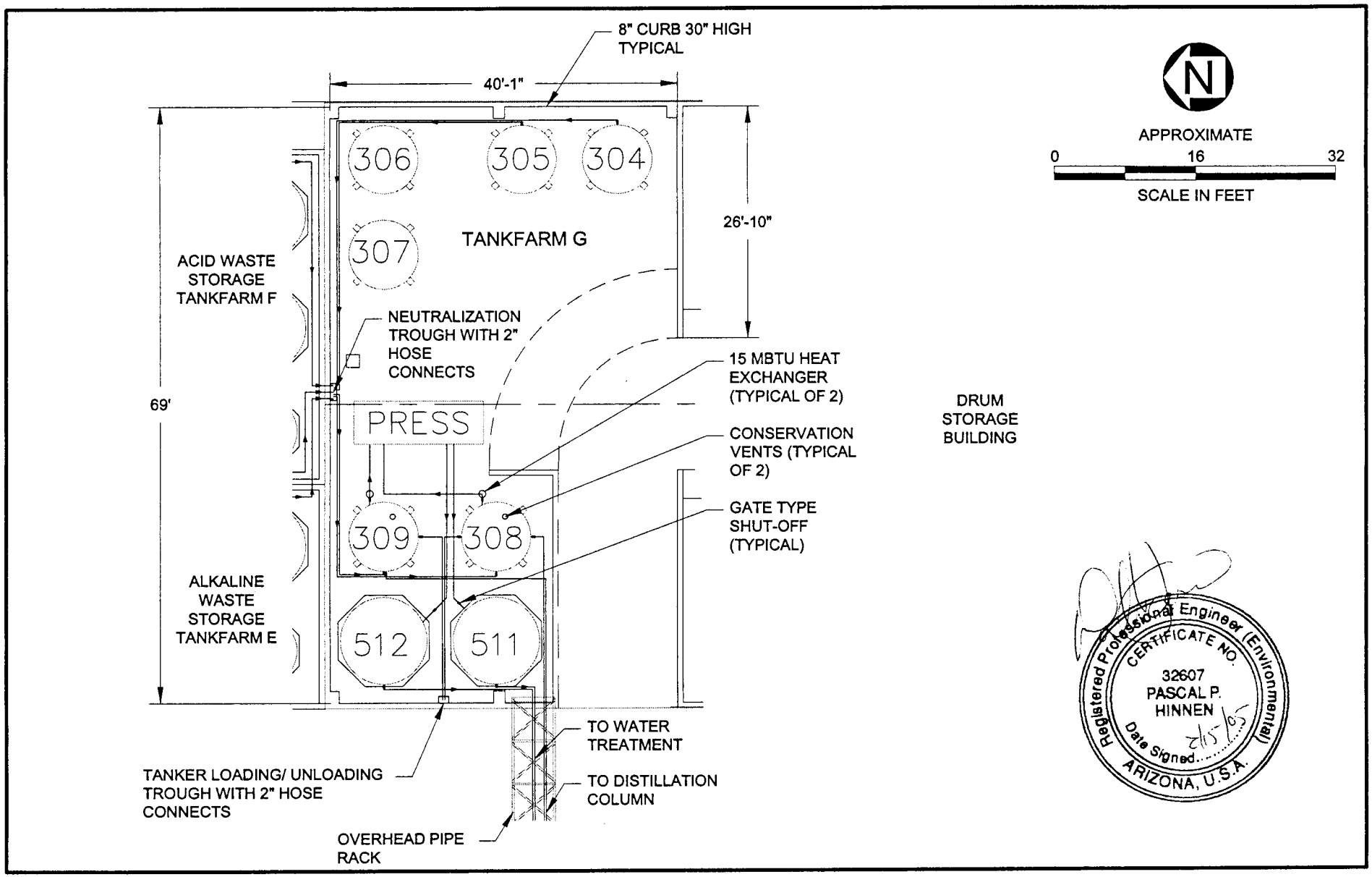

REFERENCE: BASEMAP PROVIDED BY:

ROMIC
ENVIRONMENTAL TECHNOLOGIES CORP.
ROMIC SOUTHWEST, CHANDLER, ARIZONA

URS

Proposed Tankfarm G

Romic - Southwest
Chandler, Arizona

Figure D-11

P:\ROMIC\CADD\FIGURES\A16436.DWG 02-14-05
XREF: P:\ROMIC\CADD\FIGURES\ROMIC-SITE.DWG

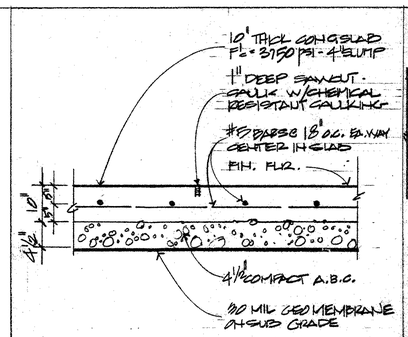

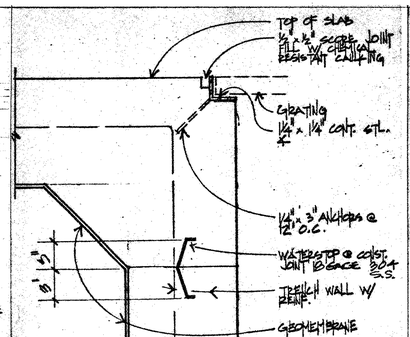

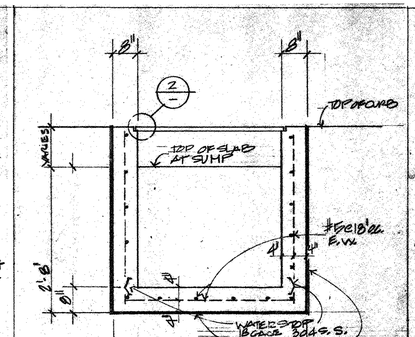

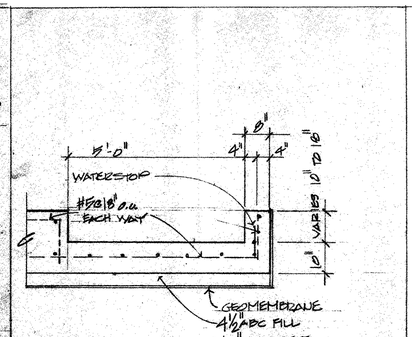

5

CONCRETE

CONCRETE HAS BEEN DESIGNED ACCORDING TO ACI 318-77, WORKING STRESS DESIGN. INSTALLED CONCRETE SHALL CONFORM TO THE FOLLOWING:

	28 DAY F'c	MAX SLUMP
CONCRETE SLABS ON GRADE	3750 PSI	4 IN
CURBS ON SLABS AND RAMP SLABS	3750 PSI	4 IN
WALL FOOTING AND STEM WALLS	3000 PSI	5 IN
COLUMN FOOTINGS	3000 PSI	5 IN

CONCRETE SHALL BE PROPORTIONED ACCORDING TO THESE REQUIREMENTS AND THOSE OF A.C.I. 301-77 WITH TYPE II CEMENT FOR THE ALTERNATE DESIGN METHOD. MAXIMUM WATER/CEMENT RATIOS SHALL NOT EXCEED THOSE NOTED IN TABLE 26-A OF THE UNIFORM BUILDING CODE, FOR THE SPECIFIED CONCRETE STRENGTH. AGGREGATE SIZES ARE 1.5 INCHES MAXIMUM FOR FOOTINGS, CAISSONS AND OTHER MASS CONCRETE SHALL HAVE MAXIMUM AGGREGATE SIZE OF 3/4 INCH. CEMENT SHALL CONFORM TO C150, AGGREGATE ACCORDING TO C33 AND WATER TO BE POTABLE.

ALL CONCRETE SHALL BE MECHANICALLY VIBRATED IN PLACE BY EXPERIENCED WORKMEN IN ORDER TO CONDENSE THE IN-PLACE CONCRETE, BUT NOT TO SEGREGATE INGREDIENTS.

NO ADMIXTURES SHALL BE USED WITHOUT SPECIFIC PRIOR WRITTEN APPROVAL FROM THE ARCHITECT/STRUCTURAL ENGINEER. ADMIXTURES USING ANY FORM OF CHLORIDES SHALL NOT BE USED.

CONCRETE SHALL BE CURED IN PLACE BY ENCLOSING WITH POLYETHYLENE FILM OR APPROVED EMULSION SPRAY FILM FOR AT LEAST 10 DAYS AFTER PLACING. ALL SURFACES OF THE CONCRETE SHALL BE PROTECTED FROM DAMAGE.

TESTING OF CONCRETE SHALL CONSIST OF ONE TEST (3 SPECIMEN), ACCORDING TO ASTM C31, FOR EACH TRUCK LOAD DELIVERED TO THE SITE. AN INDEPENDENT TESTING LAB SHALL PERFORM ALL TESTING WHICH SHALL BE PAID FOR BY THE CONTRACTOR.

WATERSTOPS SHALL BE SONNEBORN-CONTECH HYDROCIDE VINYLSTOP TYPE 6316LS AS DISTRIBUTED BY BORDER PRODUCTS AND INSTALLED ACCORDING TO THE MANUFACTURERS RECOMMENDATIONS.

AN APPROVED PLASTICIZER SHALL BE USED, ACCORDING TO THE MANUFACTURERS RECOMMENDATIONS, TO AID PLACEMENT OF THE CONCRETE.

6

REINFORCING STEEL

ALL REINFORCING STEEL DESIGN, FABRICATION AND PLACEMENT SHALL CONFORM TO THE CURRENT EDITIONS OF THE C.R.S.I. DETAILING MANUAL AND THE A.C.I. CODE.

MATERIAL SPECIFICATIONS ARE:
REINFORCING STEEL: A615-40 Fy = 40 KSI FOR #4 AND SMALLER BARS.
A615-60 Fy = 60 KSI FOR #5 AND LARGER BARS.
WIRE FABRIC: A185 Fy = 40 KSI.

MIMINUM CONCRETE COVERAGE OF ALL REINFORCING STEEL SHALL BE:

UNFORMED CONCRETE AGAINST EARTH:	3 INCHES.
FORMED CONCRETE AGAINST BACKFILL EARTH:	2 INCHES.
WALL EXTERIOR FACE:	2 INCHES.
WALL INTERIOR FACE:	1 INCH.

LAP SPLICES IN MASONRY SHALL BE 48 BAR DIAMETERS. LAP SPLICES IN CONCRETE SHALL BE 38 BAR DIAMETERS. REINFORCING SHALL BE SPLICED ONLY AS APPROVED. REINFORCING NOTED AS TO SIZE AND SPACING SHALL BE INSTALLED AS CONTINUOUS UNLESS OTHERWISE DETAILED.
MATCHING REINFORCEMENT BARS SHALL BE INSTALLED IN ALL CORNERS, JAMBS AND WALL INTERSECTION IN ALL MASONRY AND CONCRETE.
ALL REINFORCING SHALL BE SECURELY TIED IN PLACE TO PREVENT MOVEMENT DUBING CONCRETE PLACEMENT.
WELDING OF REINFORCING STEEL SHALL CONFORM TO CURRENT A.C.I., C.R.S.I. AND A.W.S. STANDARDS, WITH PRIOR APPROVAL.

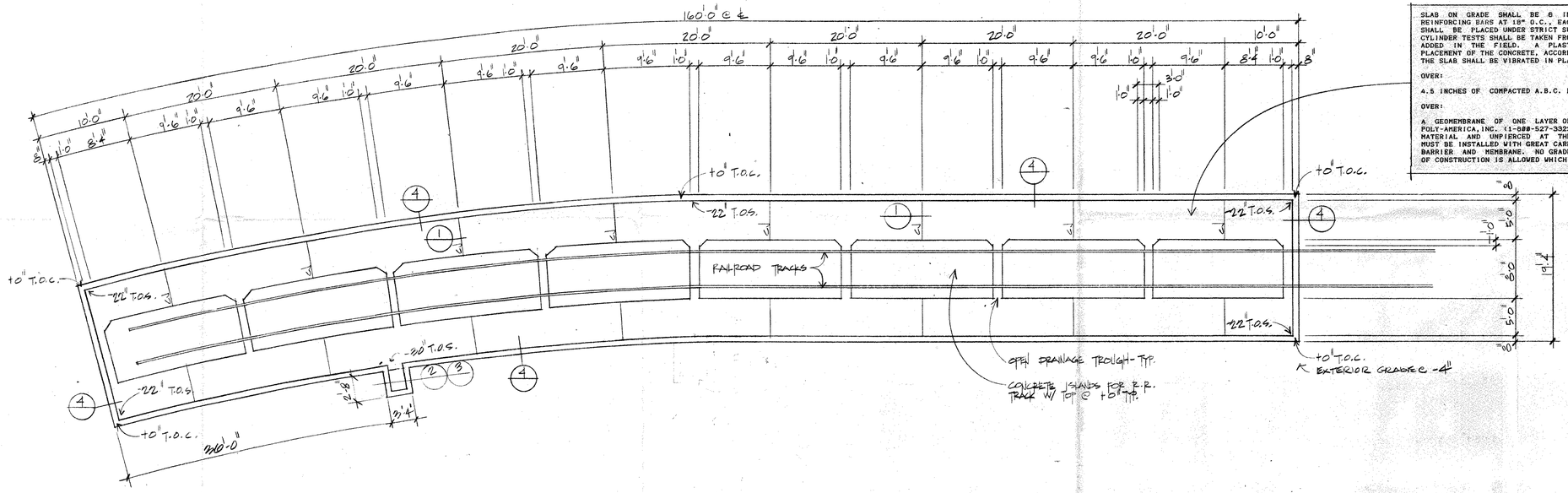

SLAB ON GRADE SHALL BE 6 INCHES THICK, NET, F'c = 3750 PSI, WITH #5 REINFORCING BARS AT 18" O.C., EACH WAY, CENTERED IN THE SLAB. THIS SLAB SHALL BE PLACED UNDER STRICT SUPERVISION AND INSPECTION. SLUMP TESTS AND CYLINDER TESTS SHALL BE TAKEN FROM EACH DELIVERY TRUCK. NO WATER SHALL BE ADDED IN THE FIELD. A PLASTICIZING AGENT SHALL BE USED TO FACILITATE PLACEMENT OF THE CONCRETE, ACCORDING TO THE MANUFACTURER'S RECOMMENDATIONS. THE SLAB SHALL BE VIBRATED IN PLACE BY EXPERIENCED WORKMEN.

OVER:

4.5 INCHES OF COMPACTED A.B.C. FILL.

OVER:

A GEOMEMBRANE OF ONE LAYER OF 30 MIL POLY-FLEX POLYEHTYLENE MEMBRANE BY POLY-AMERICA, INC. (1-800-527-3322). THIS MEMBRANE IS TO BE A ONE PIECE MATERIAL AND UNPIERCED AT THE FINISH OF CONSTRUCTION. THIS GEOMEMBRANE MUST BE INSTALLED WITH GREAT CARE SUCH THAT IT WILL EXIST AS A MOISTURE BARRIER AND MEMBRANE. NO GRADE STAKES, SCREEDS, BRACES OR ANY OTHER FORM OF CONSTRUCTION IS ALLOWED WHICH MAY CAUSE A PUNCTURE.

PLAN 1/8" = 1'-0"

RAILROAD CONTAINMENT
FOR
ROMIC CHEMICAL CORPORATION SOUTHWEST

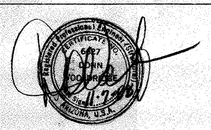

WOOLDRIDGE ENTERPRISES Structural Engineers
4330 E. Indian School Road 602-955-5154
Phoenix Arizona 85018

RAIL-101