APPENDIX D

Oceanographic Conditions and Currents

Introduction

Oceanographic conditions and currents presented below are excerpted from recent studies from the University of Hawaii and various other published sources. New data are expected to become available in the report from the Mamala Bay commission in November 1995. If available on schedule, these data may be incorporated into the final draft.

Ocean Currents and Circulation

The circulation patterns in the receiving waters at West Mamala Bay were first described in great detail during the Water Quality Program for Oahu with special emphasis on waste disposal (WQPO, 1971). Additional current measurements were taken in 1972 through 1973 during the design of the Barbers Point Ocean outfall by R.M. Towill, the city's consultant. The information gather by the two oceanographic studies were summarized in the final EIS for the Honouliuli WWTP and Barbers Point Outfall System June 1975).

The following description of the circulation in Mamala Bay has been extracted from the City's 301(h) application for the Honouliuli WWTP (October 1983):

> The circulation in the offshore and nearshore areas of the Hawaiian Islands has been intensively investigated in recent years. The work has been performed by the State of Hawaii, the City & County of Honolulu, the University of Hawaii, and numerous independent agencies and firms. The studies have shown that the circulation is complex, varying seasonally in some locations but not in others, and that the relative importance of the modifying forces such as tides, winds, and offshore eddies varies with location. In most nearshore locations, the semidiurnal tide and the underlying "permanent" current are the main driving forces influencing the circulation. The diurnal tide and a combination of seasonal and annual changes tend to make the current patterns more complex. The surface layers (approximately the top 5 m) (16.35 feet) are influenced by the prevailing winds.
>
> The Barbers Point ocean outfall is located in West Mamala Bay, midway between Pearl Harbor and Barbers Point.
>
> Available information indicates that the tide is the principal circulation component in Mamala Bay, with the exception of the wind-driven surface layers. The tidal influence is modified by a "permanent" westward flow generated by the Pacific North Equatorial Current.
>
> The Pacific North Equatorial Current flows in a generally westerly direction through the Hawaiian Islands and is part of the cyclonic circulation of the North Pacific. Although this permanent flow exists in a statistical sense, it varies in both speed and direction (U.S. Navy, 1968). The flow direction may vary from west-southwest to north-northwest. Average velocity of the current is estimated at approximately 25 cm/sec (0.48 knots). The permanent current component is difficult to separate from existing current meter records because of eddying on the downcurrent (west) coasts of the Hawaiian Island and masking by the stronger tidal flows.
>
> Hawaii has predominantly semidiurnal tidal variations with a pronounced diurnal inequality. The average tidal change per 24 hours is 0.72 m (2.36 feet). The semidiurnal tidal wave approaches Oahu from the northeast at a

progressive wave, with the flow separating the moving around the island.

Common amplitudes of the semidiurnal currents are 20 to 30 cm/sec (0.38 knots to 0.57 knots). At most locations in Hawaii the maximum current occurs in the interval between two hours before Honolulu high water and one hour after. The velocities associated with the diurnal tidal current are smaller than those corresponding to the semidiurnal tide. At most current meter stations monitored, the diurnal component is only 10 to 15 cm/sec (0.19 go 0.29 knots). The coherence with the Honolulu sea level was also low.

Measurements off Diamond Head indicate the predominance of the semidiurnal currents, with flood currents moving west and ebb current moving east, parallel to the shoreline. Similar measurements northwest of Barbers Point showed semidiurnal current reversals, but with the opposite flood and ebb tide flow directions.

This indicated that the area of convergence of the flood current and divergence of the ebb current lies between Diamond Head and Barbers Point. The oceanographic study undertaken for the design of the Barbers "Point ocean outfall located this convergence/divergence area west of Pearl Harbor in the vicinity of EWA Beach.

This combination of "permanent" flow across Mamala Bay and the tidal flow can be expected to produce reversing currents with a net southwest transport. The effects of wind and bathymetry, however, also influence circulation in Mamala Bay. Localized eddies resulting from flow past prominent points such as Diamond Head or Barbers Point may cause irregularities in the observed currents and have been observed in Mamala Bay during past studies.

The available published and unpublished circulation data for Mamala Bay, Oahu, derived from current meter records, drogue tracks, dye studies, and drift card tracks have been summarized in an ocean circulation atlas (Bathens, 1978). This atlas has analyzed the direction and strength of the net drift by season.

Bathens' (1978) summaries of the net transport, current roses, wind roses, ebb and flood current pattern and other information are shown on Figure D-l for West Mamala Bay. The rectorial sum of the tidal geostrophic and wind-driven components of the current is the net transport.

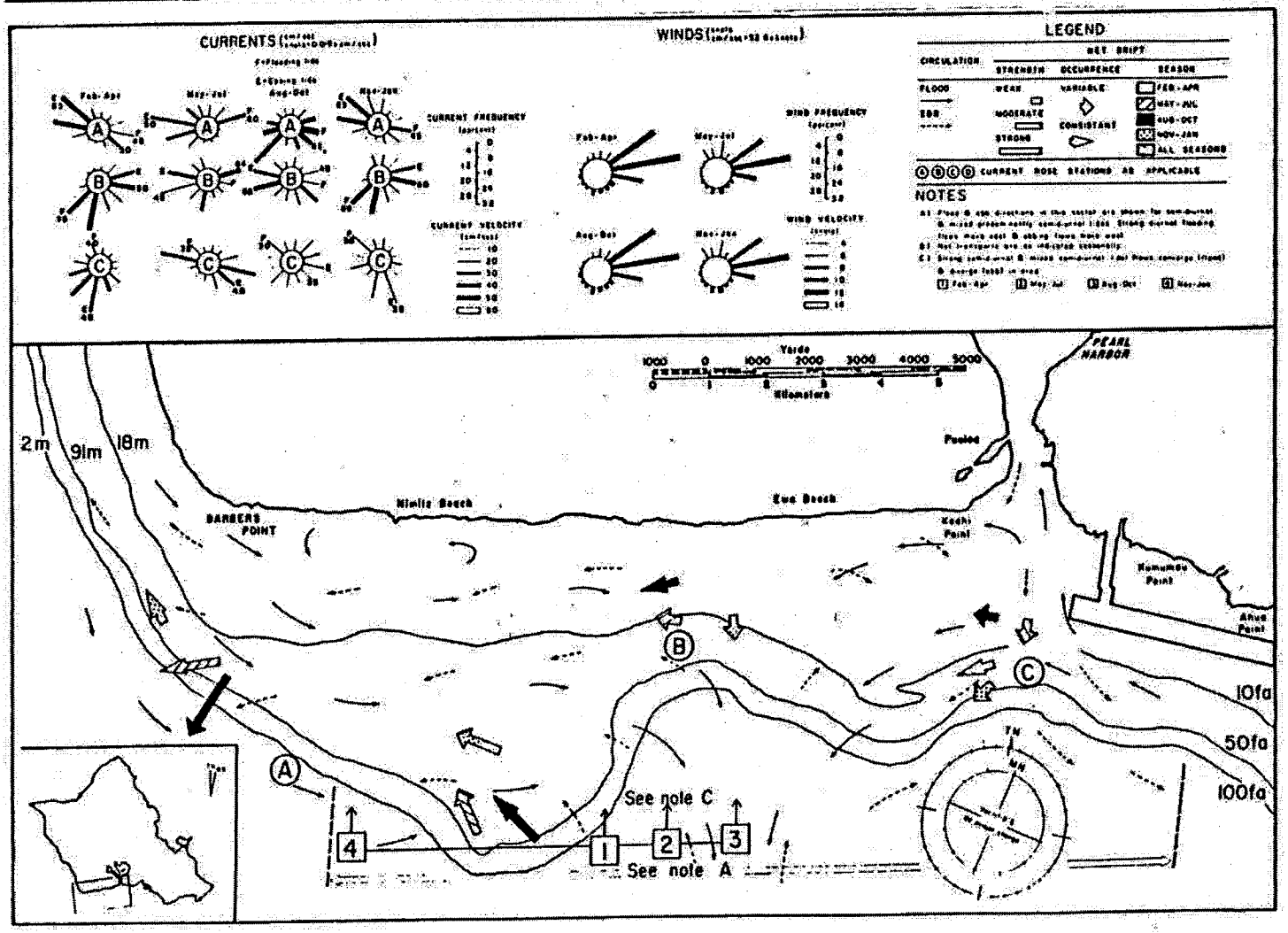

SOURCE: Bathen, K. 1978. Circulation Atlas for Oahu, Hawaii. University of Hawaii, SEAGRANT-MR-78-05, p. 26

D-3

Harding Lawson Associates
Engineering and Environmental Services

Current and Wind Roses of the W-S Sector, Pearl Harbor to Barbers Point
Honouliuli Wastewater Treatment Plant
Ewa Beach, Oahu, Hawaii

FIGURE D-1

DRAWN	JOB NUMBER	APPROVED	DATE	REVISION DATE
jcl	31038.201	DR	9/95	

The dominant reversing tidal currents parallel the bottom contours. Flood tide flow is to the west and ebb tide flow is to the east. Seasonal changes near the diffuser are minor, as evidenced by the current meter roses and the net drift vectors (Bathens, 1978).

Tidal geostatic and wind-driven flows (Bathens, 1978) for the Island of Oahu area are shown on Figures D-2, D-3, and D-4, respectively.

Current measurements were collections from four stations off Barbers Point during 1969 through 1970 (WQPO, 1971) and four stations by R.M.Towill in 1972 through 1973. Locations of the stations are shown on Figure D-5. Stations "2"[1] and "F" are located near the present diffuser section of the outfall.

Current roses from Stations 2,3, and 4 for the surface, mid-depth, and bottom currents are shown on Figures D-6, D-7, and D-8, respectively. Surface currents at Station "G" under varied wind conditions are shown at the current roses on Figure D-9. The current roses of these stations provide enough information to adequately describe the circulation pattern in West Mamala Bay.

The total current measurements taking during the period 1970 through 1973 in the area of discharge are summarized as follows:

1) The most characteristic behavior pattern observed in the current meter records is a prevailing net transport to the south and east, although there are some exceptions.

2) In general, reversing, tidal currents have dominated the circulation behavior in the near-surface, mid-depth, and bottom layers, as indicated by the current roses on Figures D-6, D-7, and D-8, respectively. The near-surface stations (30 feet deep) show only minor evidence of wind influence. The pattern of tidal reversals has indicated that the tidal convergence/divergence is located in the outfall vicinity. As discussed in the introduction, during flooding, tide water flows into Mamala Bay eastward around Barbers Point and westward around Diamond Head, converging in Mamala Bay.

   At the westernmost stations (3 and 4), the current usually flowed west at moderate velocities during ebbing tides and to the east at higher velocities but for shorter periods during flooding tides. At the easternmost station (1), the pattern reversed, with flow to the west during flooding tides and east during ebbing tides.

DIURNAL TIDES

(2 to 4 cm/hr)

LEGEND: EBB FLOOD

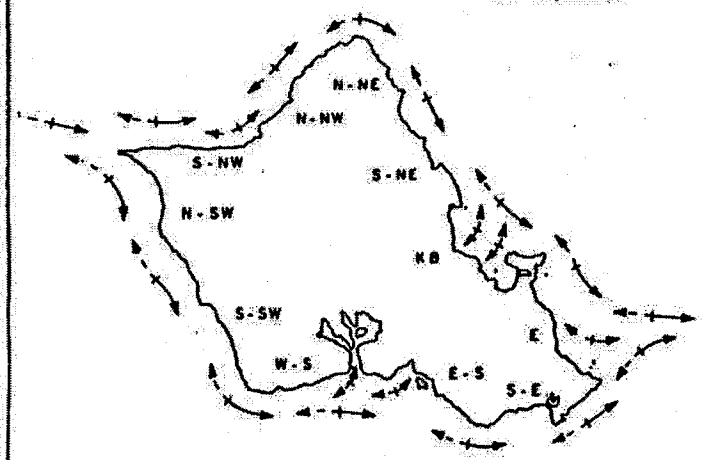

CHARACTERISTIC CURRENT SPEEDS

SECTOR	SPEED (cm/sec)	SECTOR	SPEED (cm/sec)
N-NE	10 - 25	PH	3 - 8
S-NE	10 - 15	W-S	5 - 15
KB	5 - 15	S-SW	10 - 20
E	10 - 15	N-SW	10 - 20
S-E	15 - 30	S-NW	5 - 15
E-S	5 - 15	N-NW	5 - 15
KL	3 - 12		

SEMIDIURNAL TIDES

(5 to 11 cm/hr)

LEGEND: EBB FLOOD

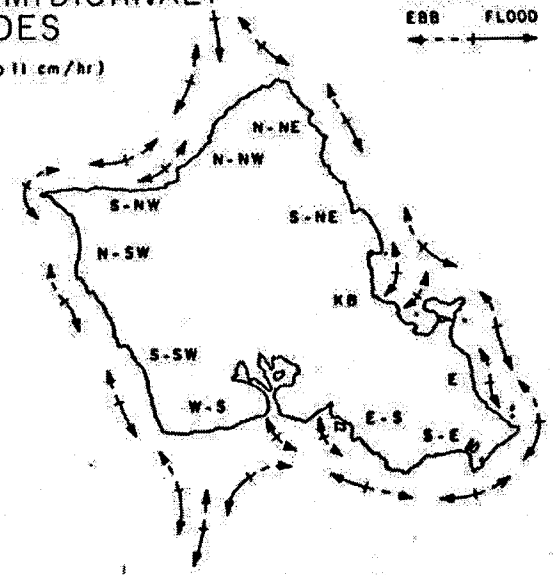

CHARACTERISTIC CURRENT SPEEDS

SECTOR	SPEED (cm/sec)	SECTOR	SPEED (cm/sec)
N-NE	15 - 30	PH	5 - 10
S-NE	15 - 25	W-S	10 - 15
KB	5 - 20	S-SW	20 - 30
E	15 - 25	N-SW	15 - 50
S-E	25 - 50	S-NW	15 - 20
E-S	10 - 25	N-NW	15 - 25
KL	5 - 15		

SOURCE: Bathen, K. 1978. Circulation Atlas for Oahu, Hawaii. University of Hawaii, SEAGRANT-MR-78-05, p. 49.

D-5

Harding Lawson Associates
Engineering and Environmental Services

Tidal Flow (Throughout Water Column)
Honouliuli Wastewater Treatment Plant
Ewa Beach, Oahu, Hawaii

FIGURE D-2

DRAWN

JOB NUMBER 31038.201

APPROVED be

DATE 9/95

REV DATE

TRADEWIND SEASON

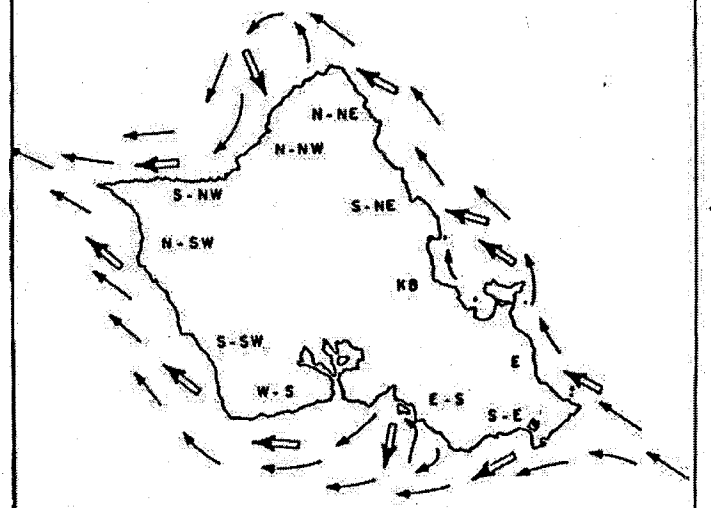

CHARACTERISTIC CURRENT SPEEDS

SECTOR	SPEED (cm/sec)	SECTOR	SPEED (cm/sec)
N-NE	7.5	W-S	8.2
S-NE	7.9	S-SW	3.0
KB	7.4	N-SW	4.9
E	5.7	S-NW	9.6
S-E	9.7	N-NW	11.9
E-S	12.3		

KONA WIND SEASON

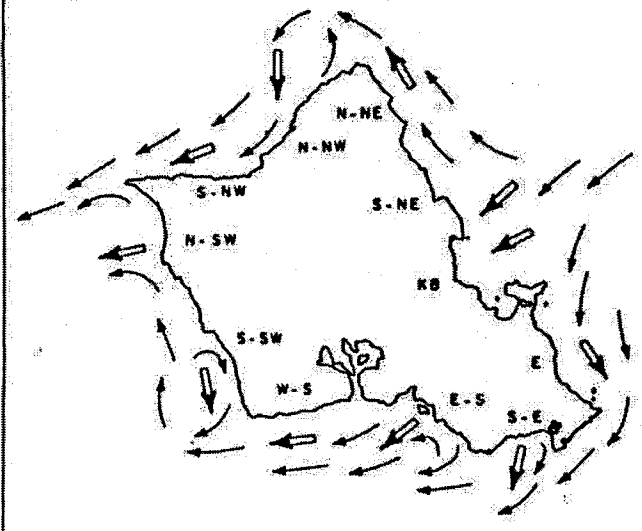

CHARACTERISTIC CURRENT SPEEDS

SECTOR	SPEED (cm/sec)	SECTOR	SPEED (cm/sec)
N-NE	7.1	W-S	8.6
S-NE	5.3	S-SW	6.6
KB	4.3	N-SW	6.7
E	12.9	S-NW	5.4
S-E	7.0	N-NW	7.0
E-S	10.2		

SOURCE: Bathen, K. Circulation Atlas for Oahu, Hawaii. University of Hawaii, SEAGRANT-MR-78-05, p. 48.

Harding Lawson Associates
Engineering and Environmental Services

Geostrophic Flow (Surface to Approximate 120m)
Honouliuli Wastewater Treatment Plant
Ewa Beach, Oahu, Hawaii

FIGURE D-3

DRAWN	JOB NUMBER	APPROVED	DATE	REVISED DATE
jcl	31038.201	DM	9/95	

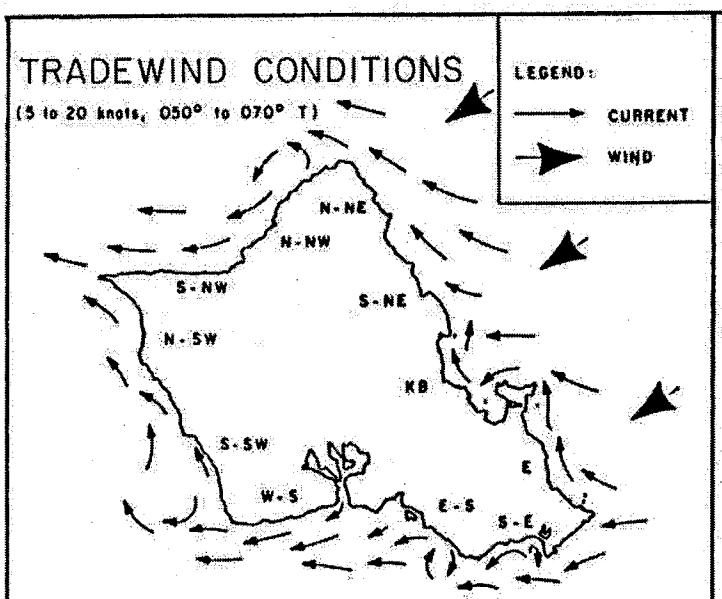

SECTOR	CURRENT SPEED (cm/sec)	WIND SPEED (knots)	SECTOR	CURRENT SPEED (cm/sec)	WIND SPEED (knots)
N-NE	13.2	12.0	W-S	12.6	11.5
S-NE	13.2	12.0	S-SW	9.3	8.5
KB	12.4	11.3	N-SW	6.6	6.0
E	12.8	11.7	S-NW	8.7	7.9
S-E	12.7	11.6	N-NW	8.7	7.9
E-S	12.6	11.5			

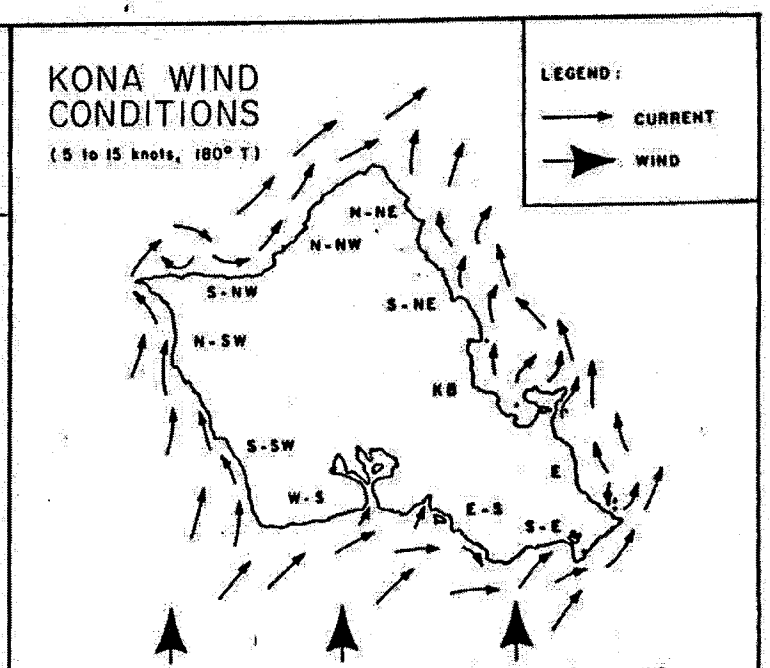

SECTOR	CURRENT SPEED (cm/sec)	WIND SPEED (knots)	SECTOR	CURRENT SPEED (cm/sec)	WIND SPEED (knots)
N-NE	7.5	6.8	W-S	9.9	9.0
S-NE	7.5	6.8	S-SW	9.9	9.0
KB	7.7	7.0	N-SW	9.9	9.0
E	6.9	6.3	S-NW	7.1	6.5
S-E	9.9	9.0	N-NW	7.1	6.5
E-S	9.9	9.0			

SOURCE: Bathen, K. 1978. Circulation Atlas for Oahu, Hawaii. University of Hawaii, SEAGRANT-MR-78-05, P. 47.

Harding Lawson Associates
Engineering and Environmental Services

Wind-Driven Flow (Ekman Surface Drift)
Honouliuli Wastewater Treatment Plant
Ewa Beach, Oahu, Hawaii

FIGURE D-4

DRAWN JCL | JOB NUMBER 31038.201 | APPROVED DR | DATE 9/95 | REVISION DATE

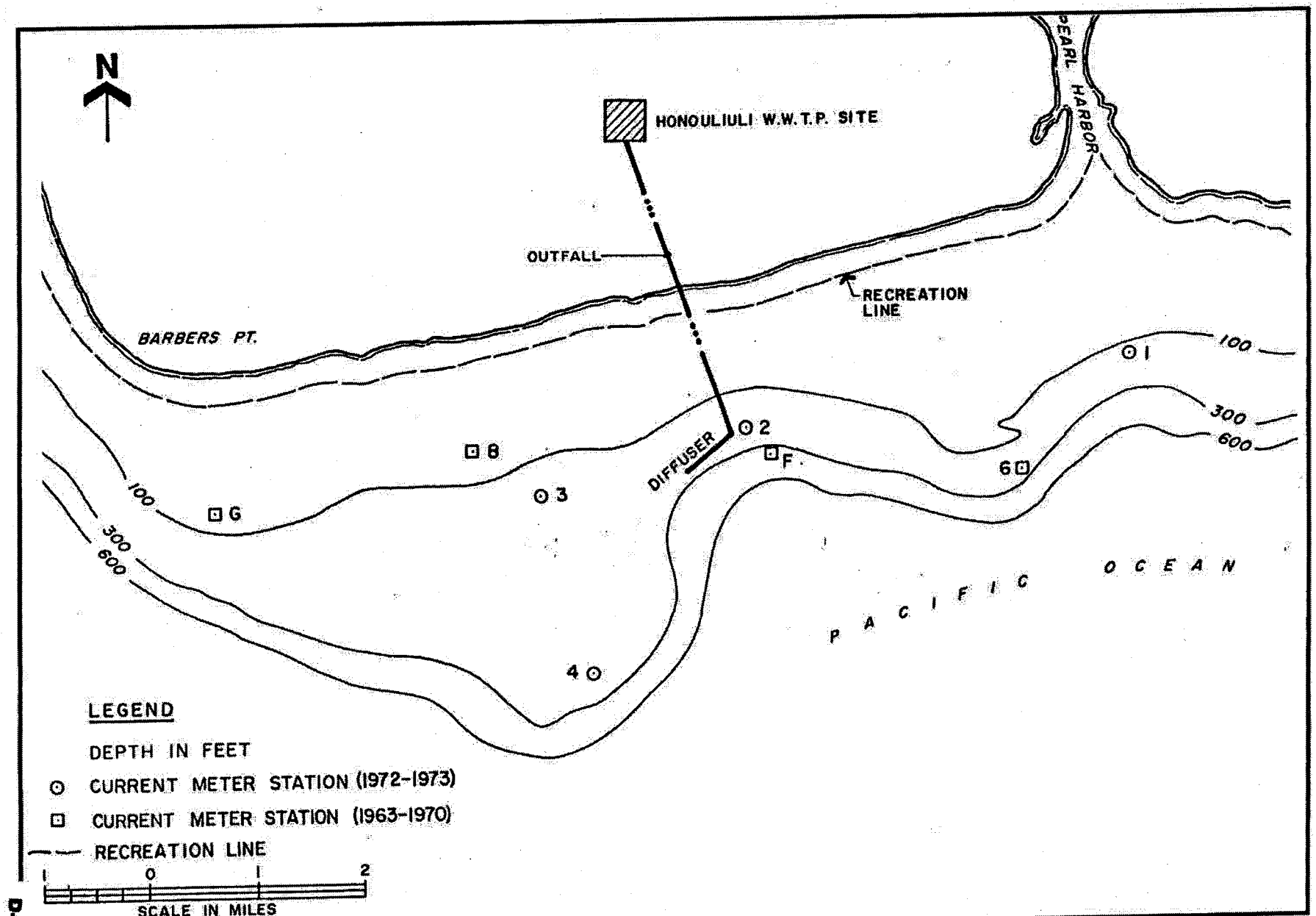

Harding Lawson Associates
Engineering and Environmental Services

Location of Current Meter Stations
Honouliuli Wastewater Treatment Plant
Ewa Beach, Oahu, Hawaii

FIGURE D-5

DRAWN	JOB NUMBER	APPROVED	DATE	REVISED DATE
jcl	31038.201	DR	9/95	

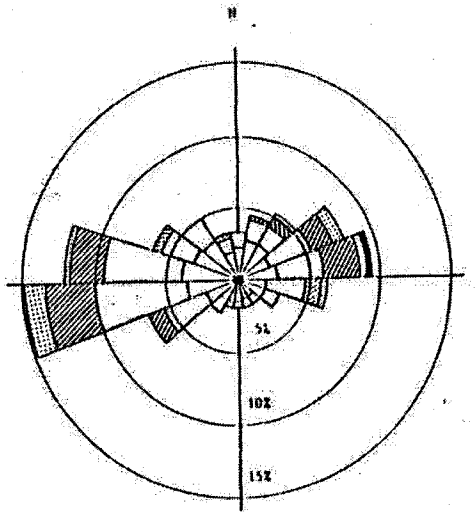

SUMMER - SURFACE
STATION: 2, 4
DATE: 8/21/72 TO 9/31/72
4/20/73 TO 6/9/73
DEPTH: 30'/106', 30'/240'
DURATION: 3,882 HOURS OF RECORD
NET TRANSPORT: 2.5 cm/sec., 313° T

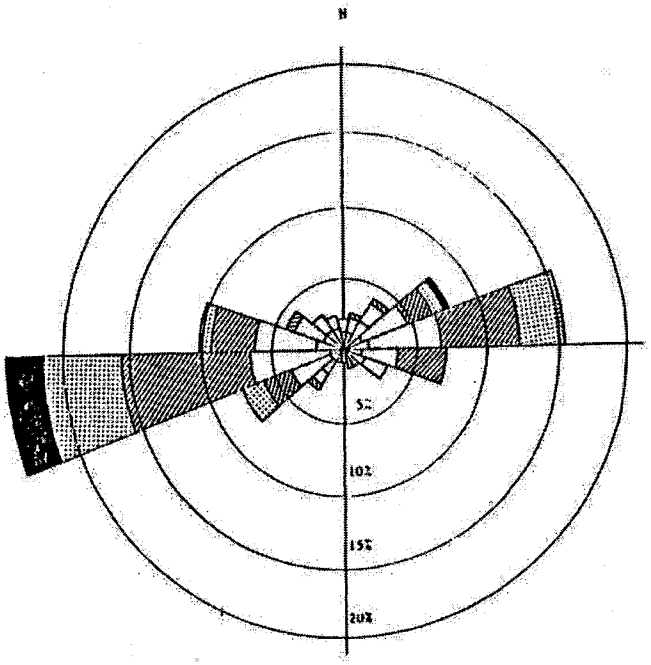

WINTER - SURFACE
STATION: 3
DATE: 12/15/71 TO 1/14/72
DEPTH: 30'/110'
DURATION: 733 HOURS OF RECORD
NET TRANSPORT: 3.9 cm/sec., 276° T

LEGEND
0 - 10 cm/sec
10.1 - 20 cm/sec
20.1 - 30 cm/sec
30.1 - 40 cm/sec
40.1 - 50 cm/sec

D-9

Harding Lawson Associates
Engineering and Environmental Services

Current Rose (Surface)
Honouliuli Wastewater Treatment Plant
Ewa Beach, Oahu, Hawaii

FIGURE
D-6

DRAWN jcl | JOB NUMBER 31038.201 | APPROVED DR | DATE 9/95 | REVISION

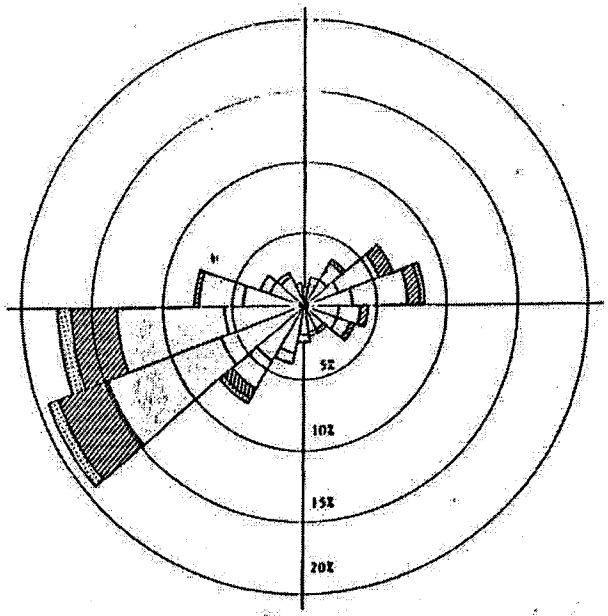

SUMMER - MID-DEPTH

STATION: 2, 3, 4

DATE: 8/21/72 TO 9/26/72
6/20/73 TO 5/31/73

DEPTH: 104'/106', 44'/110', 115'/240'

DURATION: 2,798 HOURS OF RECORD

NET TRANSPORT: 4.1 cm/sec., 246° T

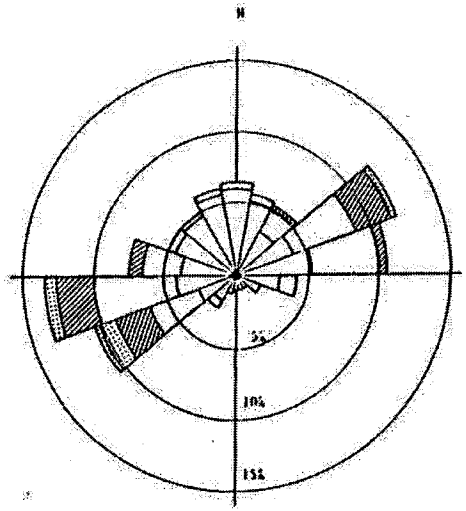

WINTER - MID-DEPTH

STATION: 2, 3

DATE: 12/15/72 TO 2/7/73

DEPTH: #2, 100'/186'
#3, 44'/110', 90'/110'

DURATION: 2,407 HOURS OF RECORD

NET TRANSPORT: 2.1 cm/sec., 302° T

LEGEND

- 0 - 10 cm/sec
- 10.1 - 20 cm/sec
- 20.1 - 30 cm/sec
- 30.1 - 40 cm/sec
- 40.1 - 50 cm/sec

D-10

Harding Lawson Associates
Engineering and Environmental Services

Current Rose (Mid-Depth)
Honouliuli Wastewater Treatment Plant
Ewa Beach, Oahu, Hawaii

FIGURE D-7

DRAWN icl

JOB NUMBER 31038.201

APPROVED DR

DATE 9/95

REVISED DATE

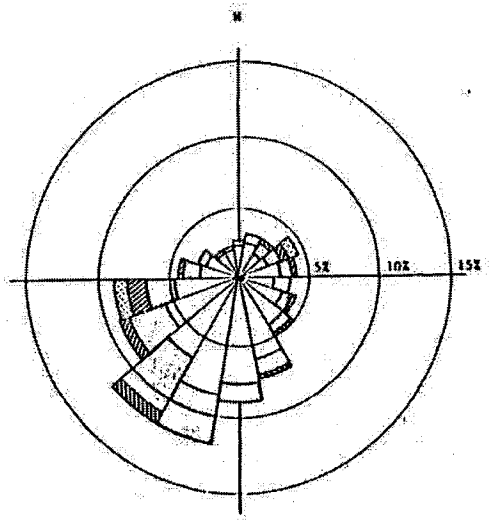

SUMMER - BOTTOM

STATION: 2, 4

DATE: 8/21/72 TO 9/26/72
4/20/73 TO 6/15/73

DEPTH: #2, 176'/186'
#4, 230'/240'

DURATION: 3,946 HOURS OF RECORD

NET TRANSPORT: 3.2 cm/sec., 210° T

LEGEND

- 0 - 10 cm/sec
- 10.1 - 20 cm/sec
- 20.1 - 30 cm/sec
- 30.1 - 40 cm/sec
- 40.1 - 50 cm/sec

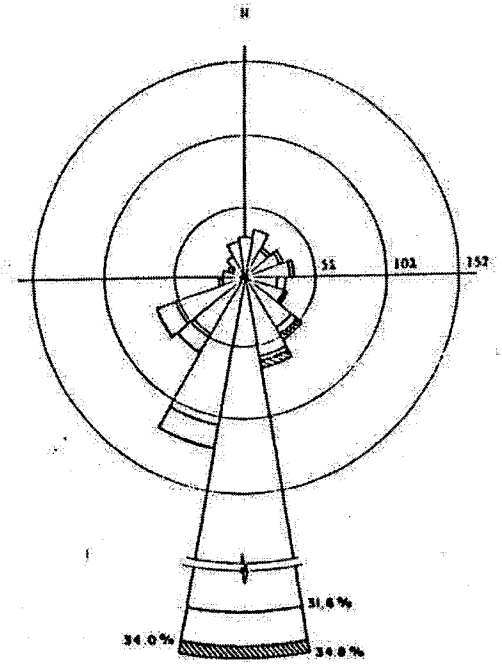

WINTER - BOTTOM

STATION: 2

DATE: 1/9/73 TO 2/6/73

DEPTH: 176'/186'

DURATION: 610 HOURS OF RECORD

NET TRANSPORT: 5.4 cm/sec., 179° T

D-11

Harding Lawson Associates
Engineering and Environmental Services

Current Rose (Bottom)
Honouliuli Wastewater Treatment Plant
Ewa Beach, Oahu, Hawaii

FIGURE
D-8

DRAWN	JOB NUMBER	APPROVED	DATE	REVISION DATE
icl	31038.201	DR	9/95	

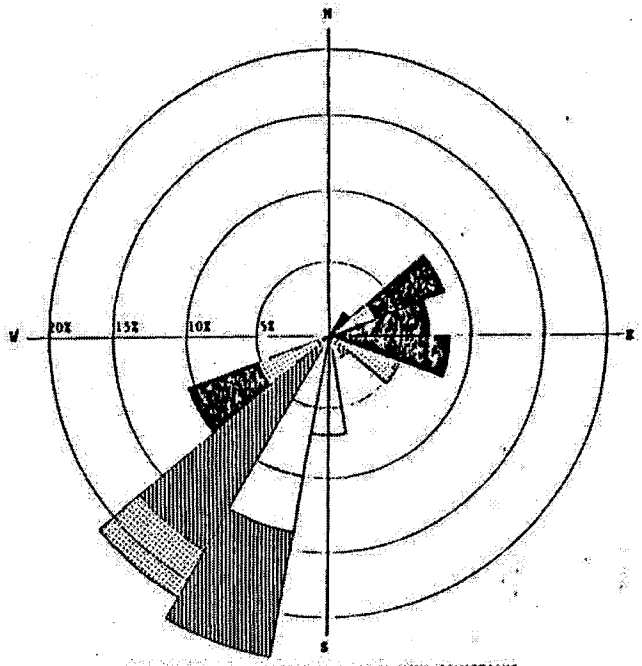

SURFACE LAYER - VARIABLE AND KONA WIND CONDITIONS

STATION: BARBERS POINT (G)

DATE: OCTOBER 15, 16, 17, 1970

DEPTH: 20'/50'

DURATION: 58 HOURS OF RECORD

NET TRANSPORT: 11.8 cm/sec, 146° Hg

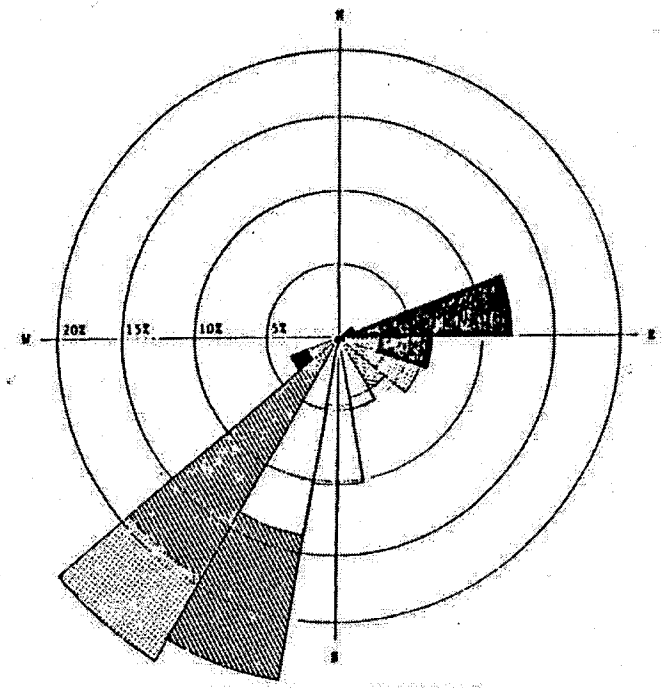

SURFACE LAYER - MODERATE TRADEWINDS

STATION: BARBERS POINT (G)

DATE: 10/19 TO 10/27/70

DEPTH: 20'/50'

DURATION: 215 HOURS OF RECORD

NET TRANSPORT: 13.16 cm/sec, 166° Hg

LEGEND

- 0 - 10 cm/sec
- 10.1 - 20 cm/sec
- 20.1 - 30 cm/sec
- 30.1 - 40 cm/sec
- 40.1 - 50 cm/sec

Harding Lawson Associates
Engineering and Environmental Services

Current Rose (Varying Wind Conditions)
Honouliuli Wastewater Treatment Plant
Ewa Beach, Oahu, Hawaii

FIGURE D-9

DRAWN	JOB NUMBER	APPROVED	DATE	REVISED DATE
icl	31038.201	DR	9/95	

In the discharge area (Station 2) the net transport of the surface currents in the summer months ranged from 0.03 knots to 0.11 knots between the 258° and 275° (magnetic) direction. Mid-depth net transport ranged from 0.05 knots to 0.05+ knots between the 257° to 298° (magnetic) direction. Finally, bottom net transport ranged from 0.05 knots to 0.08 knots between the 185° to 221° (magnetic) direction.

During the winter months, the net transport of mid-depth currents was 0.5 knots at the 353° (magnetic) direction. Winter bottom net transport was 0.10 knots at 179° (magnetic). Net transport for surface current was 0.05 knots at 273° (magnetic) direction at Station 3, one mile west of Station 2.

During the summer months, the net transport of mid-depth currents at Station 3 was 0.04 knows at the 267° (magnetic). During the winter months, the net transport of mid-depth currents ranged from 0.04 knots to 0.05 knots at a direction of 273° to 297° (magnetic).

The onshore current measurements between 270° and 050° (magnetic) of all readings were analyzed, to determine the probability of the effluent reaching the imaginary recreational line, 1,000 feet seaward to the fringing reef line. The onshore components of the surface currents (0 to 20-foot depth) was estimated to be 5.4 percent during the summer months at an average speed of 0.26 knots, and 16.8 percent during the winter at 0.17 knots.

> Although some of the water layers appear to have a relatively high percentage of shoreward transport (41 percent), the defined onshore sector is large (a 140° sector) and there is some evidence that the flow is deflected by the bathymetry before reaching the coastline. Three hundred - fifty surface drift cards were released in the vicinity of Stations 2 and 4 on 6 June 1973, during a period of 10- to 15-knots Kona winds, and none of the cards were returned. A release of 150 cards on 3 August 1973, during offshore tradewinds again failed to yield any returned cards (Bathens, 1978).

Stratification

Temperature and salinity data were recorded at four monitoring stations in West Mamala Bay from June 1970 through February 1971 during WQPO (1971). Additional data were collected by R.M. Towill from August 1972 to September 1973 from the outfall's design. Using these data, the density structure at the discharge was determined.

The measurements indicated that maximum stratification occurs during the late summer and fall months from August to October and minimum stratification occurs during the winter months between January and March. The degree of stratification will determine whether the discharge plume above the diffuser section will remain submerged or surfaced.

During the summer months, the mixed-layer depth varied from 140 to 200 feet, and to 300 feet or more during the winter months. Diurnal changes were also noticed and were thought to be caused by diurnal insolation patterns. The surface-layer thickness was increased during the early afternoon with a subsequent decrease by nightfall.

The density profiles at the outfall (Station 2) for maximum and minimum stratifications are from 1.02265 to 1.02320 g/cm^3 during the fall and 1.02387 to 1.02398 g/cm^3 during the spring. The average density of Honouliuli wastewater is 0.99755 g cm^3.

Current Meter Results

Current measurements during test years were made in the winter and summer at depths of approximately 9.1 m (30 feet), and 57.9 m (190 feet). These data were analyzed by Tetra Tech (1987). The current velocity distributions were determined by grouping data in 10 cm/sec (0.328 foot/sec) intervals. The mid-interval speed for the slowest group was 5 cm/sec (0.164 foot/sec). Only during the winter at the near-surface stations (depth of 9.1 m [30 feet]) did the 10-percentile current speeds exceed 5 cm/sec (0.164 foot/sec). Under all other conditions, the 10-percentile current speeds were below the 5 cm/sec (0.164 foot/sec), thus falling below the slowest interval. For mid-depth measurements (27.4m [90 feet]), the summer and winter 10-percentile current speeds are approximately 4 cm/sec (0.131 foot/sec) and 2.5 cm/sec (0.082 foot/sec), respectively. The results of the analysis for net transport are given in Table D-l.

Table D-1. Summary of Seasonal Net Transport and Current Direction in the Vicinity of the Honouiiuli Outfall

Season	Measurement Depth	Net Transport cm/sec (ft/sec)	Direction °True North
Summer	Near-surface	2.7 (0.089)	326
	Mid-depth	2.9 (0.095)	286
	Near-bottom	4.7 (0.154)	219
Winter	Near-surface	3.9 (0.128)	288
	Mid-depth	2.6 (0.085)	322
	Near-bottom	3.5 (0.115)	263
Spring	Near-surface	5.2 (0.171)	315
	Mid-depth	6.4 (0.210)	247
	Near-bottom	4.0 (0.131)	241

Some recent modeling work that laid the groundwork for the update for the existing application is of relevance to the fate of discharged effluent (Edward Noda & Associates, 1993). This work was done as part of the written testimony submitted to the EPA Evidentiary Hearing record in 1993 and included an analysis of initial dilution and subsequent transport of the wastewater plume based on use of available oceanographic data and a computer model. The work included the following modeling work:

Initial Dilution Modeling

The various effluent flow rates, vertical density stratifications and current flow speeds were input into the UMERGE program, and the results and associated probabilities were used to develop an annual representation for the initial dilution processes at the Honouliuli diffuser location. UMERGE provides the maximum height of rise of the plume and the average dilution at this maximum rise height. The output from the UMERGE computer program were separated into those results for a submerged and surfaced plume. Results are discussed in Section III.A, and model output is included in Appendix F, Attachment 1.

Submerged Plume Modeling Results

Results of the analysis show that about 75 percent of the time on an annual basis, the rising plume from the Honouliuli diffuser is trapped below the surface. The average trapping depth is about 39 meters (about 120 feet) below the surface with an average annual initial dilution is 788, or that 788 parts of seawater would be mixed with one part of wastewater effluent. Critical initial dilution, which represents the most conservative assumptions, is projected to be 228 (Section III.A.1).

Surfacing Plume Modeling Results

The modeling results indicate that about 25 percent of the time, on an annual basis, the plume surfaces, which results in a larger rise distance (equal to the water depth) and higher average annual estimate of initial dilution (for all surfaced plumes) of 1,621. This initial dilution phase is confined to an area in very close proximity to the diffuser location (e.g., nearfield). .

Farfield Dilution (or Subsequent Dilution)

To determine the subsequent fate of the plume in the ocean receiving waters of Mamala Bay, after the initial dilution phase, a farfield plume fate analysis using approved methodology. The methodology used in the analysis of the farfield plume was divided in a subsurface and a surface analysis, to correspond to the separate results from the UMERGE initial dilution analysis.

Submerged Plume Farfield Plume Analysis

For the submerged plume the primary driving force to transport and move the passive effluent plume is the ocean currents. Wind effects are not important for the submerged plume due to its deep submergence.

The methodology used to evaluate the probability of the submerged plume impacting locations within Mamala Bay is based on the use of a theoretical tracer particle, which behaves like a water particle. The model tracks its release from the outfall diffuser site and represents the situation after the initial dilution phase at specified time intervals (in this case we used 12 and 24 hours). The probability (percentage of time a particle would occur in a given part of Mamala Bay) is the output from the model. The output is depicted as percentages shown in a large grid of small squares covering the study area.

Of importance to the recreational impact analysis is Figure 10 of Dr. Noda's 1993 work, which provides the annual percent impact probability of occurrence results for the 24-hour elapse time analysis of the subsurface plume. His results show that the distribution of the plume impact areas shows shoreline impacts occur only at a few cells off Barbers Point, with annual impact probabilities of 0.2 to 1.1 percent time of the year for the subsurface plume. The minimum representative dilutions are about 3,440:1 and are indicative of negligible and insignificant impacts on the nearshore regions.

Surfaced Plume Farfield Analysis

The surfaced plume would be affected by both the underlying ocean currents and the surface drift caused by the wind. Both of these forces act simultaneously on the surface plume.

The wind and current case modeling results showed that the underlying current effects on the transport of the surface plume are negligible. Wind transport is the more dominant and important process to consider for surfacing plumes.

The 12- and 24-hour probability impact analyses for the surface plume for all of 1990 normalized to the 25 percent occurrence during the year are shown on Figures 17 and 18 of Dr. Noda's analysis.

Figure 17 indicates that in the grid cells adjacent to the Ewa Beach-Barbers Point shoreline, the individual cell probabilities of being impacted by the effluent plume are 0.1 to 0.2 percent of the year or about one-third to two-thirds of a day for the entire year.

During most of the year there would be zero impacts, and for a few hours during a number of days per year the plume will impact these cells. This nearshore plume impact would most likely be due to winds from the south.

Figure 20 shows the annual minimum representative dilutions that can be expected at each of the grid cells in Mamala Bay due to the surface plume which are typically about 1,741.

Dr. Noda summarizes his opinion as follows:

> 4. Based on my analysis of the nearfield and farfield plume dynamics, the following provides my opinions. The rising buoyant plume from the Honouliuli diffuser will reach, the surface about 25 percent time of the year. When the plume does surface, due to its maximum rise height, the average dilution of this surfaced plume will be about 1,621. The sub-surface plume will usually be trapped about 130 feet below the surface and will have an average dilution of about 788.
>
> Based on the analysis of the transport of the passive plume after its initial dilution phase, the probability of the plume impacting grid cells along the shoreline were less than 1 percent of the time per year, for both the surface and sub-surface plumes. When an impact does occur, the minimum representative dilutions associated with these nearshore impact would be about 3,440 and 1,741 for the subsurface and surfaced plumes, respectively.
>
> Based on these combinations of very low impact probabilities and the very high dilutions of the discharged wastewater with ambient seawater, it is my opinion, that the physical impacts in these shoreline areas would be minimal and insignificant.

Other key areas of analysis and opinion expressed by Dr. Noda are of importance to the analysis of plume impacts to shoreline areas. These include the following:

Analysis of different five sets of recorded current data within Mamala Bay all show consistently similar characteristics. The time histories of the currents all show the strong dominance of the tidal currents. While each data set shows some site-specific characteristics, the primary similarity is in the <u>frequency of speed and direction being essentially parallel to the local offshore bathymetry contours.</u>

The data from these very long-term deployments (ranging from 12 to 15 months each) indicate that there was no significant seasonal trend to the current statistical characteristics. One can conclude from this that, for all practical purposes, long-term current data records show no discernible seasonal trend.

Shoreward Transport versus Shoreline Impact

Some of the earlier current measurement work showed that currents have a component that shows that shoreward transport can occur up to 40 to 50 percent of the time during certain times of the year. Shoreward-directed transport does not imply shoreline impact as indicated both by Dr. Noda's analyses and the bacteriological monitoring data. The latter confirms that shoreline contamination impact from onshore wastewater movement is minimal and that strict State of Hawaii water quality standards are achieved at the Honouliuli monitoring stations. High counts are associated with outflow from Pearl Harbor and rainfall events when storm runoff is known to cause high bacterial counts.

The important fact to note is that a shoreward-directed component does not mean that the flow will hit the shoreline.

The probability of shoreline "hits" is described in many of the past reports on the Honouliuli current system. For example, R.M. Towill's "Barbers Point Ocean Outfall Final Design Report" (1976), Tetra Tech's report on the 301(h) waiver application (1987), and M&E Pacific's "Inaugural Water Quality Monitoring Program Report" (1985), all indicate that while there is a high percentage of shoreward-directed current components, as the flow proceeds

toward the shore, it is deflected alongshore and offshore. Specific field experiments were performed to test this process.

M&E Pacific's "Inaugural WQMP Report[11] (1985), page IV-21 states that "a histogram for shoreward currents (Table IV-4) has an apparent onshore transport direction frequency of 40 percent within the 270° to 50° magnetic sector." This projection, however is based on measurements at current meter stations located in the vicinity of the outfall; there is evidence that the flow is deflected by the bathymetry before reaching the coastline. During a period of 10 to 15 knot Kona (variable) winds, 350 surface drift cards were released in the vicinity of Stations 2 and 4 on June 6, 1973, and 150 cards were released during tradewind weather on August 3, 1973; NONE WERE RECOVERED.

Recent analysis of bacteriological monitoring data confirm that the effluent is not moving onshore or having significant impact on water quality (Iindstrom, 1993).