DEPARTMENT OF ENVIRONMENTAL SERVICES
CITY AND COUNTY OF HONOLULU
1000 ULUOHIA STREET, SUITE 308 • KAPOLEI, HAWAII 96707
PHONE: (808) 692-5159 • FAX: (808) 692-5113 • Website: www.co.honolulu.hi.us

Rec'd 8/31/2004

JEREMY HARRIS
Mayor

FRANK J. DOYLE, P.E.
Director

TIMOTHY A. HOUGHTON
Deputy Director

EMC 04-290

AUG 30 2004

Ms. Alexis Strauss, Director
U.S. Environmental Protection Agency
Region IX, Water Division
75 Hawthorne Street
San Francisco, California 94105

Gentlemen:

Subject: Updated Permit Reapplication for the Honouliuli Wastewater Treatment Plant NPDES No. HI 0020877

Please find attached, the subject updated Permit Reapplication. The update is based upon the permit reapplication submitted in December 1995, and the update submitted in January 2000.

The current update includes descriptions of the newest plant components and operations. Also, the update reflects issues from current monitoring results, such as the Water Quality Monitoring and the Whole Effluent Toxicity Tests.

We are still in the process of obtaining laboratory analyses of various wastestreams, including the primary treatment effluent. Since we normally analyze the outfall discharge (which has been a combination of primary, secondary and tertiary streams for many years), we do not have current primary effluent-only data. We will submit the updated analysis in the near future.

I certify under penalty of law that this document and all attachments were prepared under my direction or supervision in accordance with a system designed to assure that qualified personnel properly gather and evaluate the information submitted. Based on my inquiry of the person or persons who manage the system, or those persons directly responsible for gathering the information, the information submitted is, to the best of my knowledge and belief, true, accurate and complete. I am aware that there are significant penalties for submitting false information, including the possibility of fine and imprisonment for knowing violations.

If there are any questions, please contact Ross Tanimoto from our Division of Environmental Quality at (808) 692-5371.

Sincerely,

Frank J. Doyle

FRANK J. DOYLE, P.E.
Director

cc: DOH - Clean Water Branch

HONOULIULI WASTEWATER TREATMENT PLANT

301 (h) NPDES WAIVER PERMIT REAPPLICATION

VOLUME 2 OF 2

Prepared For

U.S. Environmental Protection Agency

State of Hawaii Department of Health

Prepared by

City and County of Honolulu
Department of Environmental Services

August 30, 2004

TABLE OF CONTENTS

VOLUME 1

NATIONAL POLLUTION DISCHARGE ELIMINATION SYSTEM APPLICATION FOR PERMIT TO DISCHARGE WASTEWATER ix

I. INTRODUCTION..... 1-1

II. GENERAL INFORMATION AND BASIC DATA REQUIREMENTS

.....I

I.A-1

A. Treatment System Description II.A-1

B. Receiving Water Description .....

II.B-1

C. Biological Conditions II.C-1

D. State and Federal Laws II.D-1

III. TECHNICAL EVALUATION REQUIREMENTS DI.A-1

A. Physical Characteristics of Discharge [40 CFR 125.62(a)] Description . . .

III.A-1

B. Compliance with Applicable Water Quality Standards and CWS §304(a)(i) Water Quality Criteria [40 CFR 125.61(b) and 125.62(a)] .....

III.B-1

C. Impact on Public Water Supplies [40 CFR 125.62(b)]

III.C-1

D. Biological Impact of Discharge [40 CFR 125.62(c)]

III.D-1

E. Impacts of Discharge on Recreational Activities

[40 CFR 125.62 (d)].....

III.E-1

F. Establishment of a Monitoring Program [40 CFR 125.63].....

III.F-1

G. Effect of Discharge on Other Point and Nonpoint Sources [40 CFR 125.64]

.....III

.G-1

H. Toxics Control Program and Urban Area Pretreatment Program [40 CFR 125.65 and 125.66] III

.H-1

IV. **REFERENCES** IV-1

CONTENTS (continued)

APPENDIXES

A EXISTING NPDES PERMIT

B RECEIVING WATER QUALITY DATA

C DESCRIPTION OF BIOLOGICAL CONDITIONS

1 Benthic Monitoring Program Description
2 Benthic Monitoring Program Results for 1990-2003
3 Fish Health Assessment

D OCEANOGRAPHIC CONDITIONS AND CURRENTS

E COMPLIANCE WITH STATE AND FEDERAL LAWS

1 Hawaii Administrative Rules, Chapter 11, Title 54, Water Quality Standards
2 Methodology for Determining Compliance with Water Quality Standards
3 Letters of Compliance with State and Federal Laws - only contains 2 pages = 2 letters
① BWS - 12/8/97
② DLNR - 12/5/97

F MODELING RESULTS

1 Initial Dilution Calculations
2 Sedimentation Analysis
3 Analysis of Effluent Dissolved Oxygen Demand

G ASSESSMENT OF IMPACT ON BENEFICIAL USES

1 Recreational Waters Impact Assessment
2 Commercial and Recreational Fisheries Assessment
3 Bioaccumulation Data Evaluation

H TOXICS CONTROL PROGRAM

I PROPOSED MONITORING PROGRAM

J PRIORITY POLLUTANT AND PESTICIDE DISCUSSION

FACILITY NAME AND PERMIT NUMBER:
Honouliuli WWTP Permit #Hi0020877

This permit application form was elctronically generated by P.A.S.S.

Form Approved 1/14/99
OMB Number 2040-0086

Form 2A NPDES

NPDES FORM 2A APPLICATION OVERVIEW

APPLICATION OVERVIEW

Form 2A has been developed in a modular format and consists of a "Basic Application Information" packet and a "Supplemental Application Information" packet. The Basic Application Information packet is divided into two parts. All applicants must complete Parts A and C. Applicants with a design flow greater than or equal to 0.1 mgd must also complete Part B. Some applicants must also complete the Supplemental Application Information packet. The following items explain which parts of Form 2A you must complete.

BASIC APPLICATION INFORMATION:

A. **Basic Application Information for all Applicants.** All applicants must complete questions A.1 through A.8. A treatment works that discharges effluent to surface waters of the United States must also answer questions A.9 through A.12.

B. **Additional Application Information for Applicants with a Design Flow > or = 0.1 mgd.** All treatment works that have design flows greater than or equal to 0.1 million gallons per day must complete questions B.1 through B.6.

C. **Certification.** All applicants must complete Part C (Certification).

SUPPLEMENTAL APPLICATION INFORMATION:

D. **Expanded Effluent Testing Data.** A treamtent works that discharges effluent to surface waters of the United States and meets one or more of the following criteria must complete Part D (Expanded Effluent Testing Data):

1. Has a design flow rate greater than or equal to 1 mgd,
2. Is required to have a pretreatment program (or has one in place), or
3. Is otherwise required by the permitting authority to provide the information.

E. **Toxicity Testing Data.** A treatment works that meets one or more of the following criteria must complete Part E (Toxicity Testing Data):

1. Has a design flow rate greater than or equal to 1 mgd,
2. Is required to have a pretreatment program (or has one in place), or
3. Is otherwise required by the permitting authority to provide the information.

F. **Industrial User Discharges and RCRA/CERCLA Wastes.** A treatment works that accepts process wastewater from any significant industrial users (SIUs) or receives RCRA or CERCLA wastes must complete Part F (Industrial User Discharges and RCRA/CERCLA Wastes). SIUs are defined as:

1. All industrial users subject to Categorical Pretreatment Standards under 40 Code of Federal Regulations (CFR) 403.6 and 40 CFR Chapter I, Subchapter N (see instructions); and
2. Any other industrial user that:
   a. Discharges an average of 25,000 gallons per day or more of process wastewater to the treatment works (with certain exclusions); or
   b. Contributes a process wastestream that makes up 5 percent or more of the average dry weather hydraulic or organic capacity of the treatment plant; or
   c. Is designated as an SIU by the control authority.

G. **Combined Sewer Systems.** A treatment works that has a combined sewer system must complete Part G (Combined Sewer Systems).

ALL APPLICANTS MUST COMPLETE PART C (CERTIFICATION)

This permit application form was elctronically generated by P.A.S.S.

Form Approved 1/14/99
OMB Number 2040-0086

BASIC APPLICATION INFORMATION

PART A. BASIC APPLICATION INFORMATION FOR ALL APPLICANTS:

All treatment works must complete questions A.1 through A.8 of this Basic Application Information packet.

A.1 Facility Information.

Facility name	Honouliuli Wastewater Treatment Plant
Mailing Address	1000 Uluohia Street, Suite 308 Kapolei, HI 96707
Contact Person	Frank J. Doyle, P.E.
Title	Director
Telephone Number	(808) 692-5159
Facility Address (not P.O. Box)	91-1501 Geiger Road Ewa Beach, HI 96706

A.2 Applicant Information. If the applicant is different from the above, provide the following:

Applicant name	City and County of Honolulu
Mailing Address	1000 Uluohia Street, Suite 308 Kapolei, HI 96707
Contact Person	Frank J. Doyle, P.E.
Title	Director
Telephone Number	(808) 692-5159

Is the applicant the owner or operator (or both) of the treatment works

X owner X operator

Indicate whether correspondence regarding this permit should be directed to the facility or the applicant

____ facility X applicant

A.3 Existing Environmental Permits. Provide the permit number of any existing environmental permits that have been issued to the treatment works (include state-issued permits).

Permit Type	Permit Number	Permit Type	Permit Number
NPDES	HI0020877 (permit to discharge through an outfall)	NPDES	GPC No. HI R90A409 (permit to discharge industr storm water)
Other	CSP No. 0215-01-C (covered source air permit)		

A.4. Collection System Information. Provide information on municipalities and areas served by the facility. Provide the name and population of each entity and, if known, provide information on the type of collection system (combined vs. separate) and its ownership (municipal, private, etc.).

Name	Population Served	Type of Collection System	Ownership
West Mamala Bay	336,448*	Separate	Municipal

* West Mamala Bay Facilities Plan (December 2001)

Total Population Served 336,448

A.5. Indian Country.

a. Is the treatment works located in Indian Country?

____ Yes X No

b. Does the treatment works discharge to a receiving water that is either in Indian Country or that is upstream from (and eventually flows through) Indian Country?

____ Yes X No

A.6. Flow. Indicate the design flow rate of the treatment plant (i.e., the wastewater flow rate that the plant was built to handle). Also provide the average daily flow rate and maximum daily flow rate for each of the last three years. Each year's data must be based on a 12-month time period with the 12th month of "this year" occurring no more than three months prior to this application submittal.

a. Design flow rate 38.000 mgd

	Two Years Ago	Last Year	This Year	
b. Annual average daily flow rate	26.100	26.800	27.600	mgd
c. Maximum daily flow rate	30.900	32.400	54.300	mgd

A.7. Collection System. Indicate the type(s) of collection system(s) used by the treatment plant. Check all that apply. Also estimate the percent contribution (by miles) of each.

X	Separate sanitary sewer	100 %
____	Combined storm and sanitary sewer	____ %

A.8. Discharges and Other Disposal Methods.

a. Does the treatment works discharge effluent to waters of the U.S.? X Yes ____ No

If yes, list how many of each of the following types of discharge points the treatment works uses:

i.	Discharges of treated effluent	1
ii.	Discharges of untreated or partially treated effluent	0
iii.	Combined sewer overflow points	0
iv.	Constructed emergency overflows (prior to the headworks)	0
v.	Other Reclamation Facility with discharges on-site (plant processes and recharge trench) and off-site (industrial uses and irrigation).	1

b. Does the treatment works discharge effluent to basins, ponds, or other surface impoundments that do not have outlets for discharge to waters of the U.S.? ____ Yes X No

If yes, provide the following for each surface impoundment:

Location: ____

Annual average daily volume discharged to surface impoundment(s ____ mgd

Is discharge ____ continuous or ____ intermittent

c. Does the treatment works land-apply treated wastewater? ____ Yes X No

If yes, provide the following for each land application site:

Location: _____

Number of acres: _____

Annual average daily volume applied to site: _____ mgd

Is discharge _____ continuous or _____ intermittent

d. Does the treatment works discharge or transport treated or untreated wastewater to another treatment works? X Yes _____ No

If yes, describe the mean(s) by which the wastewater from the treatment works is discharged or transported to the other treatment works (e.g., tank truck, pipe).

Pipeline discharge of effluent to an on-site water reclamation facility

If transport is by a party other than the applicant, provide:

Transporter name: _____

Mailing address: _____

_____

Contact person: _____

Title: _____

Telephone number: _____

Name: Ewa Water Reclamation Facility

Mailing address: 630 South Beretania Street Honolulu, HI 96813

Contact person: Clifford Jamile

Title: Manager and Chief Engineer

Telephone number: (808) 748-5000

If known, provide the NPDES permit number of the treatment works that receives this discharge. _____

For each treatment works that receives this discharge, provide the following:
Provide the average daily flow rate from the treatment works into the receiving facility. 13.00 mgd

e. Does the treatment works discharge or dispose of its wastewater in a manner not included in A.8.a through A.8.d above (e.g., underground percolation, well injection) X Yes _____ No

If yes, provide the following for each disposal method:

Description of method (including location and size of site(s) if applicable):

A non-potable aquifer recharge trench, located on-site, is available as a R1 reclaimed water disposal site.

Annual daily volume disposed of by this method: Currently, no effluent flow has been discharged into the recharge trench.

Is disposal through this method _____ continuous or X intermittent

A request for discharge of a lower quality effluent has been submitted to the Hawaii Department of Health. Included in the request, are research documents from an on-site groundwater recharge study.

WASTEWATER DISCHARGES:
If you answered "yes" to quetion A.8.a, complete questions A.9 through A.12 **once for each outfall** (including bypass points) through which effluent is discharged. Do not include information on combined sewer overflows in this section. **If you answered "no" to question A.8.a.,** go to Part B, "Additional Application Information for Applicants with a Design Flow Greater than or Equal to 0.1 mgd."

A.9 Description of Outfall.

a. Outfall number SERIAL NO. 001

b. Location Ewa Beach (City of town, if applicable) 96706 (Zip Code)

Honolulu (County) HI (State)

21-17-00 N (Latitude) 158-01-50 W (Longitude)

c. Distance from shore (if applicable) 9,000 ft.

d. Depth below surface (if applicable) 200 ft.

e. Average daily flow rate 21.60 mgd

f. Does this outfall have either an intermittent or a periodic discharge? ____ yes X no (go to A.9.g)

If yes, provide the following information:

Number of times per year discharge occurs: ____

Average duration of each discharge: ____

Average flow per discharge: ____ mgd

Months in which discharge occurs:

g. Is outfall equipped with a diffuser? X yes ____ no

A.10 Description of Receiving Waters.

a. Name of receiving water West Mamala Bay

b. Name of watershed (if known) ____

United States Soil Conservation Service 14-digit watershed code (if known): ____

c. Name of State Management/River Basin (if known): ____

United States Geological Survey 8-digit hydrologic cataloging unit code (if known): ____

d. Critical low flow of receiving stream (if applicable):

acute ____ cfs chronic ____ cfs

e. Total hardness of receiving stream at critical low flow (if applicable): ____ mg/l of $CaCO_3$

A.11 Description of Treatment.

a. What levels of treatment are provided? Check all that apply.

X Primary ____ Secondary

____ Advanced X Other. Describe: The City may intermittently discharge excess reclaimed effluent to the outfall. The discharge may include secondary effluent, R1 reclaimed water and/or brine.

b. Indicated the following removal rates (as applicable):

Design BOD_5 removal or Design $CBOD_5$ removal	30.0	%
Design SS removal	30.0	%
Design P removal		%
Design N removal		%
Other		%

c. What type of disinfection is used for the effluent from this outfall? If disinfection varies by season, please describe.

Discharged effluent is not disinfected.

If disinfection is by chlorination, is dechlorination used for this outfall? ____ Yes X No

d. Does the treatment plan have post aeration? ____ Yes X No

A.12. Effluent Testing Information. All Applicants that discharge to waters of the US must provide effluent testing dta for the following parameters Provide the indicated effluent testing required by the permitting authority for each outfall through which effluent is discharged. Do not include information on combined sewer overflows in this section. All information reported must be based on data collected through analysis conducted using 40 CFR Part 136 methods. In addition, this data must comply with QA/QC requirements of 40 CFR Part 136 and other appropriate QA/QC requirements for standard methods for analytes not addressed by 40 CFR Part 136. At a minimum, effluent testing data must be based on at least three samples and must be no more than four and one-half years apart.

Outfall number: SERIAL NO. 001

PARAMETER	MAXIMUM DAILY VALUE		AVERAGE DAILY VALUE		
	Value	Units	Value	Units	Number of Samples
pH (Minimum)	6.89	s.u.			
pH (Maximum)	7.40	s.u.			
Flow Rate	42.60	MGD	21.60	MGD	121
Temperature (Winter)	28.5	°C	27.1	°C	62
Temperature (Summer)	30.5	°C	29.3	°C	84

*For pH please report a minimum and a maximum daily value

POLLUTANT		MAXIMUM DAILY DISCHARGE		AVERAGE DAILY DISCHARGE			ANALYTICAL METHOD	ML/MDL
		Conc.	Units	Conc.	Units	Number of Samples		
CONVENTIONAL AND NONCONVENTIONAL COMPOUNDS.								
BIOCHEMICAL OXYGEN	BOD-5	168.00	mg/l	129.00	mg/l	95	EPA 405.1	ML: 3 mg/l
DEMAND (Report one)	CBOD-5	0.00		0.00		0		
FECAL COLIFORM		13.00	M/100ml	5.40	M/100ml	121	SM 9222D	ML: 1 CFU/100 ml
TOTAL SUSPENDED SOLIDS (TSS)		81.00	mg/l	42.00	mg/l	96	EPA 160.2	ML: 1 mg/l

END OF PART A.
REFER TO THE APPLICATION OVERVIEW TO DETERMINE WHICH OTHER PARTS OF FORM 2A YOU MUST COMPLETE

BASIC APPLICATION INFORMATION

PART B. ADDITIONAL APPLICATION INFORMATION FOR APPLICANTS WITH A DESIGN FLOW GREATER THAN OR EQUAL TO 0.1 MGD (100,000 gallons per day).

All applicants with a design flow rate greater than or equal to 0.1 mgd must answer questions B.1 through B.6. All others go to Part C (Certification).

B.1. Inflow and Infiltration. Estimate the average number of gallons per day that flow into the treatment works from inflow and/or infiltration.

9,350,000 gpd

Briefly explain any steps underway or planned to minimize inflow and infiltration.

"Sewer Rehabilitation and Infiltration & Inflow Minimization Study" (December 1999) identifies collection/treatment system deficiencies. Selected West Mamala Bay projects are included in the City Capital Improvement Program.

B.2. Topographic Map. Attach to this application a topographic map of the area extending at least one mile beyond facility property boundaries. This map must show the outline of the facility and the following information. (You may submit more than one map if one map does not show the entire area.)

a. The area surrounding the treatment plan, including all unit processes.

b. The major pipes or other structures through which wastewater enters the treatment works and the pipes or other structures through which treated wastewater is discharged from the treatment plant. Include outfalls from bypass piping, if applicable.

c. Each well where wastewater from the treatment plant is injected underground.

d. Wells, springs, other surface water bodies, and drinking water wells that are: 1) within 1/4 mile of the property boundaries of the treatment works, and 2) listed in public record or otherwise known to the applicant.

e. Any areas where the sewage sludge produced by the treatment works is stored, treated, or disposed.

f. If the treatment works receives waste that is classified as hazardous under the Resource Conservation and Recovery Act (RCRA) by truck, rail or special pipe, show on the map where that hazardous waste enters the treatment works and where it is treated, stored and/or disposed.

B.3. Process Flow Diagram or Schematic. Provide a diagram showing the processes of the treatment plant, including all bypass piping and all backup power sources or redundancy in the system. Also provide a water balance showing all treatment units, including disinfection (e.g., chlorination and dechlorination). The water balance must show daily average flow rates at influent and discharge points and approximate daily flow rates between treatment units. Include a brief narrative description of the diagram.

B.4. Operation/Maintenance performed by Contractor(s).

Are any operational or maintenance aspects (related to wastewater treatment and effluent quality) of the treatment works the responsibility of a contractor. _____ Yes X No

If yes, list the name, address, telephone number, and status of each contractor and describe the contractor's responsibilities (attach additional pages if necessary.

Name: _____

Mailing Address: _____

_____

Telephone Number: _____

Responsibilites of Contractor: _____

B.5. Scheduled Improvements and Schedules of Implementation. Provide information on any uncompleted implementation schedule or uncompleted plans for improvements that will affect the wastewater treatment, effluent quality, or design capacity of the treatment works. If th treatment works has several different implementaiton schedules or is planning several improvements, submit separate response to question B. each. (If none, go to question B.6.)

a. List the outfall number (assigned in question A.9) for each outfall that is covered by this implementation schedule.

SERIAL NO. 001

b. Indicate whether the planned improvements or implementation schedule are required by local, State, or Federal agencies.

_____ Yes X No

c. If the answer to B.5.b is "Yes," briefly describe, including new maximum daily inflow rate (if applicable).

d. Provide dates imposed by any compliance schedule or any actual dates of completion for the implementation steps listed below, as applicable. For improvements planned independently of local, State, or Federal agencies, indicate planned or actual completion dates, as applicable. Indicate dates as accurately as possible.

Implementation Stage	Schedule MM / DD / YYYY	Actual Completion MM / DD / YYYY
- Begin construction	1/1/2007	
- End construction	1/1/2009	
- Begin discharge	1/1/2009	
- Attain operational level	1/1/2010	

e. Have appropriate permits/clearance concerning other Federa/State requirements been obtained?. ____ Yes X

Describe briefly:

Staff is developing a Scope of Work for the New Solids Handling Facilities (Anaerobic Digesters). Consultant to prepare project contract documents for bid. Consultant/Contractor to obtain permits/clearances during appropriate project phases.

A Design/Build concept for project implementation is being considered by the Administration.

The proposed anaerobic sludge digesters will discharge supernatant into the return flow, possibly affecting the plant influent quality. However, the proposed project return flow is expected to be similar to current solids stabilization process flows. The project schedule has been estimated from available preliminary data.

B.6. EFFLUENT TESTING DATA (GREATER THAN 0.1 MGD ONLY).

Applicants that discharge to waters of the US must provide effluent testing data for the following parameters. Provide the indicated effluent testing required by the permitting authority for each outfall through which effluent is discharged. Do not include information on combined sewer overflows in this section. All information reported must be based on data collected through analysis conducted using 40 CFR Part 136 methods. In addition, this data must comply with QA/QC requirements of 40 CFR Part 136 and other appropriate QA/QC requirements for standard methods for analytes not addressed by 40 CFR Part 136. At a minimum, effluent testing data must be based on at least three pollutant scans and must be no more than four and one-half years old.

Outfall Number SERIAL NO. 001

POLLUTANT	MAXIMUM DAILY DISCHARGE		AVERAGE DAILY DISCHARGE			ANALYTICAL METHOD	ML/MDL
	Conc.	Units	Conc.	Units	Number of Samples		
CONVENTIONAL AND NONCONVENTIONAL COMPOUNDS.							
Ammonia (as N)	0.00	N/A	0.00	N/A	0		
Chlorine (Total Residual, TRC)	0.00	N/A	0.00	N/A	0		
Dissolved Oxygen	0.00	N/A	0.00	N/A	0		
Total Kjeldahl Nitrogen (TKN)	0.00	N/A	0.00	N/A	0		
Nitrate plus Nitrite Nitrogen	0.00	N/A	0.00	N/A	0		
Oil and Grease	32.40	mg/l	17.30	mg/l	9	1664A, SPE	ML: 5 mg/l
Phosphorus (Total)	0.00	N/A	0.00	N/A	0		
Total dissolved Solids (TDS)	0.00	N/A	0.00	N/A	0		

Note: N/A is Not Available. Data is not required by permit.

END OF PART B.
REFER TO THE APPLICATION OVERVIEW TO DETERMINE WHICH OTHER PARTS OF FORM 2A YOU MUST COMPLETE

BASIC APPLICATION INFORMATION

PART C. CERTIFICATION

All applicants must complete the Certification Section. Refer to instructions to determine who is an officer for the purposes of this certification. All applicants must complete all applicable sections of Form 2A, as explained in the Application Overview. Indicate below which parts of Form 2A you have completed and are submitting. By signing this certification statement, applicants confirm that they have reviewed Form 2A and have completed all sections that apply to the facility for which this application is submitted.

Indicate which parts of Form 2A you have completed and are submitting:

X Basic Application Information Packet

Supplemental Application Information packet:

X Part D (Expanded Effluent Testing Data)

X Part E (Toxicity Testing: Biomonitoring Data)

X Part F (Industrial User Discharges and RCRA/CERCLA Wastes)

____ Part G (Combined Sewer Systems)

ALL APPLICANTS MUST COMPLETE THE FOLLOWING CERTIFICATION.

I certify under penalty of law that this document and all attachments were prepared under my direction or supervision in accordance with a system designed to assure that qualified personnel properly gather and evaluate the information submitted. Based on my inquiry of the person or persons who manage the system or those persons directly responsible for gathering the information, the information is, to the best of my knowledge and belief, true, accurate, and complete. I am aware that there are significant penalties for submitting false information, including the possibility of fine and imprisonment for knowing violations.

Name and official title: Frank J. Doyle, P.E., Director

Signature: Frank J. Doyle

Telephone number: (808) 692-5159

Date signed: _____

Upon request of the permitting authority you must submit any other information necessary to assess wastewater treatment practices at the treatment works or identify appropriate permitting requirements.

SEND COMPLETE FORMS TO:

FACILITY NAME AND PERMIT NUMBER:
Honouliuli WWTP Permit #HI0020877

This permit application form was elctronically generated by P.A.S.S.

Form Approved 1/14/99
OMB Number 2040-0086

SUPPLEMENTAL APPLICATION INFORMATION

PART D. EXPANDED EFFLUENT TESTING DATA

Refer to the directions on the cover page to determine whether this section applies to the treatment works.

Effluent Testing: 1.0 mgd and Pretreatment Treatment Works. If the has a design flow greater than or equal to 1.0 mgd or it has (or is required to have) a pretreatment program, or is otherwise required by the permitting authority to provide the data, then provide effluent testing data for the following pollutants. Provide the indicated effluent testing information and any other information required by the permitting authority for each outfall through which effluent is discharged. Do not include information on combined sewer overflows in this section. All information reported must be based on data collected through analyses conducted using 40 CFR Part 136 methods. In addition, these data must comply with QA/QC requirements of 40 CFR Part 136 and other appropriate QA/QC requirements for standard methods for analytes not addressed by 40 CFR Part 136. Indicate in the blank rows provided below any data you may have on pollutants not specifically listed in this form. At a minimum, effluent testing data must be based on at least three pollutant scans and must be no more than four and one-half years old.

(Complete once for each outfall discharging effluent to waters of the United States.)

Outfall Number SERIAL NO. 001 Effluent sampled on 12/2/2003; Effluent flow on 12/2/2003: 24.354 MGD.

POLLUTANT	MAXIMUM DAILY DISCHARGE				AVERAGE DAILY DISCHARGE					ANALYTICAL METHOD	ML/MDL
	Conc.	Units	Mass	Units	Conc.	Units	Mass	Units	Number of Samples		
METALS (TOTAL RECOVERABLE), CYANIDE, PHENOLS, AND HARDNESS.											
Antimony	1.80	ug/l	0.20	Kg	1.80	ug/l	0.20	Kg	1.00	SM3113B	ML: 2.0 ug/l
Arsenic	0.00	ND	0.00	ND	0.00	ND	0.00	ND	1.00	SM3113B	ML: 2.0 ug/l
Berylium	0.00	ND	0.00	ND	0.00	ND	0.00	ND	1.00	SM3113B	ML: 0.10 ug/l
Cadmium	0.23	ug/l	0.02	Kg	0.23	ug/l	0.02	Kg	1.00	SM3113B	ML: 0.50 ug/l or 0.2
Chromium	4.70	ug/l	0.40	Kg	4.70	ug/l	0.40	Kg	1.00	SM3113B	ML: 2.0 ug/l
Copper	42.00	ug/l	3.90	Kg	42.00	ug/l	3.90	Kg	1.00	SM3113B	ML: 2.0 ug/l
Lead	2.40	ug/l	0.20	Kg	2.40	ug/l	0.20	Kg	1.00	SM3113B	ML: 1.0 ug/l
Mercury	0.11	ug/l	0.09	Kg	0.11	ug/l	0.09	Kg	1.00	SM3113B	ML: 0.20 ug/l
Nickel	4.50	ug/l	0.40	Kg	4.50	ug/l	0.40	Kg	1.00	SM3113B	ML: 1.0 ug/l or 2.0?
Selenium	1.30	ug/l	0.10	Kg	1.30	ug/l	0.10	Kg	1.00	SM3113B	ML: 2.0 ug/l
Silver	2.30	ug/l	0.20	Kg	2.30	ug/l	0.20	Kg	1.00	SM3113B	ML: 0.50 ug/l or 0.4
Thallium	0.00	ND	0.00	ND	0.00	ND	0.00	ND	1.00	SM3113B	ML: 2.0 ug/l
Zinc	100.0(	ug/l	9.20	Kg	100.0(	ug/l	9.20	Kg	1.00	SM3113B	ML: 10 ug/l
Cyanide	0.00	ND	0.00	ND	0.00	ND	0.00	ND	1.00	EPA 335.2	ML: 5.0 ug/l
Total Phenolic Compounds	0.00		0.00		0.00		0.00		0.00		
Hardness (As CaCO3)	0.00		0.00		0.00		0.00		0.00		

Outfall Number SERIAL NO. 001

POLLUTANT	MAXIMUM DAILY DISCHARGE				AVERAGE DAILY DISCHARGE					ANALYTICAL METHOD	ML/MDL
	Conc.	Units	Mass	Units	Conc.	Units	Mass	Units	Number of Samples		
VOLATILE ORGANIC COMPOUNDS											
Acrolein	1.70	ug/l	0.20	Kg	1.70	ug/l	0.20	Kg	1.00	EPA 603	ML: 1.0 ug/l
Acrylonitrile	0.00	ND	0.00	ND	0.00	ND	0.00	ND	1.00	EPA 603	ML: 1.0 ug/l
Benzene	0.30	ug/l	0.03	Kg	0.30	ug/l	0.03	Kg	1.00	EPA 624	ML: 2.0 ug/l
Bromoform	0.00	ND	0.00	ND	0.00	ND	0.00	ND	1.00	EPA 624	ML: 2.0 ug/l
Carbon Tetrachloride	0.00	ND	0.00	ND	0.00	ND	0.00	ND	1.00	EPA 624	ML: 2.0 ug/l
Clorobenzene	0.00	ND	0.00	ND	0.00	ND	0.00	ND	1.00	EPA 624	ML: 2.0 ug/l
Chlorodibromo-Methane	0.00		0.00		0.00		0.00		0.00		
Chloroethane	0.00	ND	0.00	ND	0.00	ND	0.00	ND	1.00	EPA 624	ML: 2.0 ug/l
2-Chloro-Ethylvinyl Ether	0.00	ND	0.00	ND	0.00	ND	0.00	ND	1.00	EPA 624	ML: 2,0 ug/l
ChloroForm	0.60	ug/l	0.06	Kg	0.60	ug/l	0.06	Kg	1.00	EPA 624	ML: 2.0 ug/l
Dichlorobromo-Methane	0.00		0.00		0.00		0.00		0.00		
1, 1-Dichloroethane	0.00	ND	0.00	ND	0.00	ND	0.00	ND	1.00	EPA 624	ML: 2.0 ug/l
1, 2-Dichloroethane	0.00	ND	0.00	ND	0.00	ND	0.00	ND	1.00	EPA 624	ML: 2.0 ug/l
Trans-1, 2-Dichloro-Ethylene	0.00		0.00		0.00		0.00		0.00		
1, 1-Dichloroethylene	0.00		0.00		0.00		0.00		0.00		
1, 2-Dichloropropane	0.00	ND	0.00	ND	0.00	ND	0.00	ND	1.00	EPA 624	ML: 2.0 ug/l
1, 3-Dichloro-Propylene	0.00		0.00		0.00		0.00		0.00		
Ethylbenzene	0.50	ug/l	0.05	Kg	0.50	ug/l	0.05	Kg	1.00	EPA 624	ML: 2.0 ug/l
Methyl Bromide	0.00		0.00		0.00		0.00		0.00		
Methyl Chloride	0.00		0.00		0.00		0.00		0.00		
Methylene Chloride	0.70	ug/l	0.06	Kg	0.70	ug/l	0.06	Kg	1.00	EPA 624	ML: 2.0 ug/l
1, 1, 2, 2-Tetrachloro-Ethane	0.00	ND	0.00	ND	0.00	ND	0.00	ND	1.00	EPA 624	ML: 2.0 ug/l
Tetrachloro-Ethylene	0.00		0.00		0.00		0.00		0.00		
Toluene	2.00	ug/l	0.20	Kg	2.00	ug/l	0.20	Kg	1.00	EPA 624	ML: 2.0

1, 1, 1-Trichloroethane	0.00	ND	0.00	ND	0.00	ND	0.00	ND	1.00	EPA 624	ML: 2.0 ug/l
1, 1, 2-Trichloroethane	0.00	ND	0.00	ND	0.00	ND	0.00	ND	1.00	EPA 624	ML: 2.0 ug/l
Vinyl Chloride	0.00	ND	0.00	ND	0.00	ND	0.00	ND	1.00	EPA 624	ML: 2.0 ug/l

Outfall Number SERIAL NO. 001

POLLUTANT	MAXIMUM DAILY DISCHARGE				AVERAGE DAILY DISCHARGE					ANALYTICAL METHOD	ML/MDL
	Conc.	Units	Mass	Units	Conc.	Units	Mass	Units	Number of Samples		
ACID-EXTRACTABLE COMPOUNDS											
P-Chloro-M-Cresol	0.00		0.00		0.00		0.00		0.00		
2-Chlorophenol	0.00	ND	0.00	ND	0.00	ND	0.00	ND	1.00	EPA 625	ML: 11 ug/l
2, 4-Dichlorophenol	0.00	ND	0.00	ND	0.00	ND	0.00	ND	1.00	EPA 625	ML: 11 ug/l
2, 4-Dimethylphenol	0.00	ND	0.00	ND	0.00	ND	0.00	ND	1.00	EPA 625	ML: 11 ug/l
4, 6-Dinitro-O-Cresol	0.00		0.00		0.00		0.00		0.00		
2, 4-Dinitrophenol	0.00	ND	0.00	ND	0.00	ND	0.00	ND	1.00	EPA 625	ML: 26 ug/l
2-Nitrophenol	0.00	ND	0.00	ND	0.00	ND	0.00	ND	1.00	EPA 625	ML: 11 ug/l
4-Nitrophenol	0.00	ND	0.00	ND	0.00	ND	0.00	ND	1.00	EPA 625	ML: 26 ug/l
Pentachlorophenol	0.00	ND	0.00	ND	0.00	ND	0.00	ND	1.00	EPA 625	ML: 26 ug/l
Phenol	4.00	UG/L	0.40	KG	4.00	UG/L	0.40	KG	1.00	EPA 625	ML: 11 ug/l
2, 4, 6-Trichlorophenol	0.00	ND	0.00	ND	0.00	ND	0.00	ND	1.00	EPA 625	ML: 11 ug/l

Outfall Number SERIAL NO. 001

POLLUTANT	MAXIMUM DAILY DISCHARGE				AVERAGE DAILY DISCHARGE					ANALYTICAL METHOD	ML/MDL
	Conc.	Units	Mass	Units	Conc.	Units	Mass	Units	Number of Samples		
BASE-NEUTRAL COMPOUNDS											
Acenaphthene	0.00	ND	0.00	ND	0.00	ND	0.00	ND	1.00	EPA 625	ML: 11 ug/l
Acenaphthylene	0.00	ND	0.00	ND	0.00	ND	0.00	ND	1.00	EPA 625	ML: 11 ug/l
Anthracene	0.00	ND	0.00	ND	0.00	ND	0.00	ND	1.00	EPA 625	ML: 11 ug/l
Benzidine	0.00	ND	0.00	ND	0.00	ND	0.00	ND	1.00	EPA 625	ML: 51 ug/l
Benzo(A)Anthracene	0.00	ND	0.00	ND	0.00	ND	0.00	ND	1.00	EPA 625	ML: 11 ug/l
3, 4 Benzo-Fluoranthene	0.00		0.00		0.00		0.00		0.00		

Benzo(GHI)Perylene	0.00	ND	0.00	ND	0.00	ND	0.00	ND	1.00	EPA 625	ML: 11
Bis (2-Chloroethoxy) Methane	0.00	ND	0.00	ND	0.00	ND	0.00	ND	1.00	EPA 625	ML: 51 ug/l
Bis (2-Chloroethyl)-Ether	0.00	ND	0.00	ND	0.00	ND	0.00	ND	1.00	EPA 625	ML: 11 ug/l
Bis (2-Chloroiso-Propyl) Ether	0.00	ND	0.00	ND	0.00	ND	0.00	ND	1.00	EPA 625	ML: 11 ug/l
Bis (2-Ethylhexyl) Phthalate	7.00	ug/l	0.60	Kg	7.00	ug/l	0.60	Kg	1.00	EPA 625	ML: 11 ug/l
4-Bromophenyl Phenyl Ether	0.00	ND	0.00	ND	0.00	ND	0.00	ND	1.00	EPA 625	ML: 11 ug/l
Butyl Benzyl Phthalate	0.00	ND	0.00	ND	0.00	ND	0.00	ND	1.00	EPA 625	ML: 11 ug/l
2-Chloronaphthalene	0.00	ND	0.00	ND	0.00	ND	0.00	ND	1.00	EPA 625	ML: 11 ug/l
4-Chlorophenyl Phenyl Ether	0.00	ND	0.00	ND	0.00	ND	0.00	ND	1.00	EPA 625	ML: 11 ug/l
Di-N-Butyl Phthalate	0.00	ND	0.00	ND	0.00	ND	0.00	ND	1.00	EPA 625	ML: 11 ug/l
Di-N-Octyl Phthalate	0.00	ND	0.00	ND	0.00	ND	0.00	ND	1.00	EPA 625	ML: 11 ug/l
Dibenzo(A,H)Anthracene	0.00	ND	0.00	ND	0.00	ND	0.00	ND	1.00	EPA 625	ML: 11 ug/l
1, 2-Dichlorobenzene	0.00	ND	0.00	ND	0.00	ND	0.00	ND	1.00	EPA 624	ML: 2.0 ug/l
1, 3-Dichlorobenzene	0.00	ND	0.00	ND	0.00	ND	0.00	ND	1.00	EPA 624	ML: 2.0 ug/l
1, 4-Dichlorobenzene	2.10	ug/l	0.20	Kg	2.10	ug/l	0.20	Kg	1.00	EPA 624	ML: 2.
3, 3-Dichlorobenzene	0.00		0.00		0.00		0.00		0.00		
Diethyl Phthalate	4.00	ug/l	0.40	Kg	4.00	ug/l	0.40	Kg	1.00	EPA 625	ML: 11 ug/l
Dimethyl Phthalate	0.00	ND	0.00	ND	0.00	ND	0.00	ND	1.00	EPA 625	ML: 11 ug/l
2, 4-Dinitrotoluene	0.00	ND	0.00	ND	0.00	ND	0.00	ND	1.00	EPA 625	ML: 11 ug/l
2, 6-Dinitrotoluene	0.00	ND	0.00	ND	0.00	ND	0.00	ND	1.00	EPA 625	ML: 11 ug/l
Fluoranthene	0.00	ND	0.00	ND	0.00	ND	0.00	ND	1.00	EPA 625	ML: 11 ug/l
Fluorene	0.00	ND	0.00	ND	0.00	ND	0.00	ND	1.00	EPA 625	ML: 11 ug/l
Hexachlorobenzene	0.00	ND	0.00	ND	0.00	ND	0.00	ND	1.00	EPA 625	ML: 11 ug/l
Hexachlorobutadiene	0.00	ND	0.00	ND	0.00	ND	0.00	ND	1.00	EPA 625	ML: 51 ug/l
HexachlorocycloPentadiene	0.00	ND	0.00	ND	0.00	ND	0.00	ND	1.00	EPA 625	ML: 11 ug/l
Hexachloroethane	0.00	ND	0.00	ND	0.00	ND	0.00	ND	1.00	EPA 625	ML: 11 ug/l
Indeno(1, 2, 3-CK)Pyrene	0.00		0.00		0.00		0.00		0.00		
Isophorone	0.00	ND	0.00	ND	0.00	ND	0.00	ND	1.00	EPA 625	ML: 51 ug/l

Naphthalene	0.00	ND	0.00	ND	0.00	ND	0.00	ND	1.00	EPA 625	ML: 51 ug/l
Nitrobenzene	0.00	ND	0.00	ND	0.00	ND	0.00	ND	1.00	EPA 625	ML: 11 ug/l
N-Nitrosodi-N-Propylamine	0.00	ND	0.00	ND	0.00	ND	0.00	ND	1.00	EPA 625	ML: 11 ug/l
Phenanthrene	0.00	ND	0.00	ND	0.00	ND	0.00	ND	1.00	EPA 625	ML: 11 ug/l
Pyrene	0.00	ND	0.00	ND	0.00	ND	0.00	ND	1.00	EPA 625	ML: 11 ug/l
1, 2, 4-Trichlorobenzene	0.00	ND	0.00	ND	0.00	ND	0.00	ND	1.00	EPA 625	ML: 51 ug/l

END OF PART D.
REFER TO THE APPLICATION OVERVIEW TO DETERMINE WHICH OTHER PARTS OF FORM YOU MUST COMPLETE

Honouliuli Regional Wastewater Treatment Plant - Permit NO. HI 0020877

PART E. TOXICITY TESTING DATA

Individual test data : *Tripneustes gratilla* Fertilization Test

HONOULIULI WASTEWATER TREATMENT FACILITY
NPDES PERMIT NO. HI0020877

FORM 2A
SUPPLEMENTAL APPLICATION INFORMATION:
PART E. TOXICITY TESTING DATA.

E.1. REQUIRED TESTS.
See following attached sheets.

E.2. INDIVIDUAL TEST DATA.
See following attached sheets.

E.3. TOXICITY REDUCTION EVALUATION.
See following attached sheets.

E.4. SUMMARY OF SUBMITTED BIOMONITORING TEST INFORMATION.
As required by the Honouliuli WWTP NPDES permit, biomonitoring testing information is submitted to the U.S. Environmental Protection Agency and Hawaii Department of Health as a part of the monthly Discharge Monitoring Report (28th of each following month) and the Annual Assessment Report (30th of each June). Whole Effluent Test (WET) and Toxicity Identification Evaluation (TIE) submittals, for the past four and one-half years, are summarized by each year as follows:

36 = 14

1 month 1/12

2004: May 7, 2004 WET (*Tripneustes gratilla*) testing (1) indicated the presence of toxicity exceeding the NPDES permit compliance value. A series of following weekly tests did not show any further toxicity that was persistent in the effluent.

July Jan 7 months 7/12

2003: September 6, 2002 WET (*Tripneustes gratilla*) (7) testing indicated the presence of toxicity exceeding the NPDES permit compliance value. Intermittent toxicity was observed in the following weekly samples. TIE manipulations indicated that the toxicants were associated with particulate material and were partly organic in nature. The weekly testing on effluent sampled from July 3, 2003 through August 3, 2003 showed no continuing toxicity. Monthly monitoring was subsequently resumed.

4 months + 2 months 6 months

2002: March 2, 2002 WET (*Tripneustes gratilla*) testing (6) indicated the presence of toxicity exceeding NPDES permit compliance value. The following accelerated testing showed intermittent toxic events. Toxicity was not detected in the weekly samples collected from May 9, 2002 to June 13, 2002. Subsequently, monthly WET monitoring was resumed.

check for near misses

2001 and 2000: During these years, WET (*Tripneustes gratilla* and *Ceriodaphnia dubia*) testings were in compliance with the permit value.

1999 4 near misses : 158.7 or 159 → 159.7 is limit
2001 2 near misses

FACILITY NAME AND PERMIT NUMBER:
Honouliuli Regional Wastewater Treatment Plant - Permit No. HI 0020877

Form Approved 1/14/99
OMB Number 2040-0086

SUPPLEMENTAL APPLICATION INFORMATION

PART E. TOXICITY TESTING DATA

POTWs meeting one or more of the following criteria must provide the results of whole effluent toxicity tests for acute or chronic toxicity for each of the facility's discharge points: 1) POTWs with a design flow rate greater than or equal to 1.0 mgd; 2) POTWs with a pretreatment program (or those that are required to have one under 40 CFR Part 403); or 3) POTWs required by the permitting authority to submit data for these parameters.

- At a minimum, these results must include quarterly testing for a 12-month period within the past 1 year using multiple species (minimum of two species), or the results from four tests performed at least annually in the four and one-half years prior to the application, provided the results show no appreciable toxicity, and testing for acute and/or chronic toxicity, depending on the range of receiving water dilution. Do not include information on combined sewer overflows in this section. All information reported must be based on data collected through analysis conducted using 40 CFR Part 136 methods. In addition, this data must comply with QA/QC requirements of 40 CFR Part 136 and other appropriate
- QA/QC requirements for standard methods for analytes not addressed by 40 CFR Part 136.
  In addition, submit the results of any other whole effluent toxicity tests from the past four and one-half years. If a whole effluent toxicity test conducted during the past four and one-half years revealed toxicity, provide any information on the cause of the toxicity or any results of a toxicity reduction evaluation, if one was conducted.
- If you have already submitted any of the information requested in Part E, you need not submit it again. Rather, provide the information requested in question E.4 for previously submitted information. If EPA methods were not used, report the reasons for using alternate methods. If test summaries are available that contain all of the information requested below, they may be submitted in place of Part E.

If no biomonitoring data is required, do not complete Part E. Refer to the Application Overview for directions on which other sections of the form to complete.

E.1. Required Tests.

Indicate the number of whole effluent toxicity tests conducted in the past four and one-half years.

105 chronic _____ acute

E.2. Individual Test Data. Complete the following chart for each whole effluent toxicity test conducted in the last four and one-half years. Allow one column per test (where each species constitutes a test). Copy this page if more than three tests are being reported.

	Test number: HO012300	Test number: HO021200	Test number: HO031200
a. Test information.			
Test species & test method number	T. gratilla (draft method)	T. gratilla (draft method)	T. gratilla (draft method)
Age at initiation of test	Not applicable	Not applicable	Not applicable
Outfall number	001	001	001
Dates sample collected	01/22/00 - 01/23/00	02/11/00 -02/12/00	03/11/00 -03/12/00
Date test started	01/23/00	02/12/00	03/12/00
Duration	1 hour 20 minutes	1 hour 20 minutes	1 hour 20 minutes
b. Give toxicity test methods followed.			
Manual title	Not applicable	Not applicable	Not applicable
Edition number and year of publication	Not applicable	Not applicable	Not applicable
Page number(s)	Not applicable	Not applicable	Not applicable
c. Give the sample collection method(s) used. For multiple grab samples, indicate the number of grab samples used.			
24-Hour composite	Automatic Flow Composite	Automatic Flow Composite	Automatic Flow Composite
Grab			
d. Indicate where the sample was taken in relation to disinfection. (Check all that apply for each)			
Before disinfection			
After disinfection			
After dechlorination			

FACILITY NAME AND PERMIT NUMBER:

Honouliuli Regional Wastewater Treatment Plant - Permit No.HI 00208077

Form Approved 1/14/99
OMB Number 2040-0086

	Test number: HO012300	Test number: HO021200	Test number: HO031200
e. Describe the point in the treatment process at which the sample was collected.			
Sample was collected:	Downstream from all plant additions	Downstream from all plant additions	Downstream from all plant additions
f. For each test, include whether the test was intended to assess chronic toxicity, acute toxicity, or both.			
Chronic toxicity	✓	✓	✓
Acute toxicity			
g. Provide the type of test performed.			
Static	✓	✓	✓
Static-renewal			
Flow-through			
h. Source of dilution water. If laboratory water, specify type; if receiving water, specify source.			
Laboratory water			
Receiving water	seawater	seawater	seawater
i. Type of dilution water. If salt water, specify "natural" or type of artificial sea salts or brine used.			
Fresh water			
Salt water	natural	natural	natural
j. Give the percentage effluent used for all concentrations in the test series.			
	0.00 0.16	0.00 0.16	0.00 0.16
	0.32 0.63	0.32 0.63	0.32 0.63
	1.26 2.52	1.26 2.52	1.26 2.52
k. Parameters measured during the test. (State whether parameter meets test method specifications)			
pH	Yes	Yes	Yes
Salinity	Yes	Yes	Yes
Temperature	Yes	Yes	Yes
Ammonia	Not measured	Not measured	Not measured
Dissolved oxygen	Yes	Yes	Yes
l. Test Results.			
Acute:			
Percent survival in 100% effluent	%	%	%
LC50	%	%	%
95% C.I.	%	%	%
Control percent survival	%	%	%
Other (describe)			

FACILITY NAME AND PERMIT NUMBER:

Honouliuli Regional Wastewater Treatment Plant - Permit No.HI0020877

Form Approved 1/14/99
OMB Number 2040-0086

Chronic:	Test number: HO012300	Test number: HO021200	Test number: HO031200
NOEC REPRODUCTION	2.52 %	0.63 %	2.52 %
IC25	%	%	%
Control percent survival	%	%	%
Other (describe) NOEC SURVIVAL	%	%	%
m. Quality Control/Quality Assurance.			
Is reference toxicant data available?	Yes	Yes	Yes
Was reference toxicant test within acceptable bounds?	Yes	Yes	Yes
What date was reference toxicant test run (MM/DD/YYYY)?	01/23/00	02/12/00	03/12/00
Other (describe)			

E.3. Toxicity Reduction Evaluation. Is the treatment works involved in a Toxicity Reduction Evaluation?

___Yes ✓ No If yes, describe: _____

FACILITY NAME AND PERMIT NUMBER:

Honouliuli Regional Wastewater Treatment Plant - Permit No. HI 00208077

Form Approved 1/14/99
OMB Number 2040-0086

	Test number: HO041800	Test number: HO051300	Test number: HO061300
a. Test information.			
Test species & test method number	T. gratilla (draft method)	T. gratilla (draft method)	T. gratilla (draft method)
Age at initiation of test	Not applicable	Not applicable	Not applicable
Outfall number	001	001	001
Dates sample collected	04/17/00 - 04/18/00	05/12/00 - 05/13/00	06/12/00 -06/13/00
Date test started	04/18/00	05/13/00	06/13/00
Duration	1 hour 20 minutes	1 hour 20 minutes	1 hour 20 minutes
b. Give toxicity test methods followed.			
Manual title	Not applicable	Not applicable	Not applicable
Edition number and year of publication	Not applicable	Not applicable	Not applicable
Page number(s)	Not applicable	Not applicable	Not applicable
c. Give the sample collection method(s) used. For multiple grab samples, indicate the number of grab samples used.			
24-Hour composite	Automatic Flow Composite	Automatic Flow Composite	Automatic Flow Composite
Grab			
d. Indicate where the sample was taken in relation to disinfection. (Check all that apply for each)			
Before disinfection			
After disinfection			
After dechlorination			
e. Describe the point in the treatment process at which the sample was collected.			
Sample was collected:	Downstream from all plant additions	Downstream from all plant additions	Downstream from all plant additions
f. For each test, include whether the test was intended to assess chronic toxicity, acute toxicity, or both.			
Chronic toxicity	✓	✓	✓
Acute toxicity			
g. Provide the type of test performed.			
Static	✓	✓	✓
Static-renewal			
Flow-through			
h. Source of dilution water. If laboratory water, specify type; if receiving water, specify source.			
Laboratory water			
Receiving water	seawater	seawater	seawater
i. Type of dilution water. It salt water, specify "natural" or type of artificial sea salts or brine used.			
Fresh water			
Salt water	natural	natural	natural
j. Give the percentage effluent used for all concentrations in the test series.			
	0.00 0.16	0.00 0.16	0.00 0.16
	0.32 0.63	0.32 0.63	0.32 0.63
	1.26 2.52	1.26 2.52	1.26 2.52

FACILITY NAME AND PERMIT NUMBER:

Honouliuli Regional Wastewater Treatment Plant - Permit No. HI 00208077

Form Approved 1/14/99
OMB Number 2040-0086

	Test number: HO041800	Test number: HO051300	Test number: HO061300
k. Parameters measured during the test. (State whether parameter meets test method specifications)			
pH	Yes	Yes	Yes
Salinity	Yes	Yes	Yes
Temperature	Yes	Yes	Yes
Ammonia	Not measured	Not measured	Not measured
Dissolved oxygen	Yes	Yes	Yes
l. Test Results.			
Acute:			
Percent survival in 100% effluent	%	%	%
LC50	%	%	%
95% C.I.	%	%	%
Control percent survival	%	%	%
Other (describe)			
Chronic:			
NOEC REPRODUCTION	1.26 %	2.52 %	0.63 %
IC25	%	%	%
Control percent survival	%	%	%
Other (describe) NOEC SURVIVAL	%	%	%
m. Quality Control/Quality Assurance.			
Is reference toxicant data available?	Yes	Yes	Yes
Was reference toxicant test within acceptable bounds?	Yes	Yes	Yes
What date was reference toxicant test run (MM/DD/YYYY)?	04/18/00	05/13/00	06/13/00
Other (describe)			

E.3. Toxicity Reduction Evaluation . Is the treatment works involved in a Toxicity Reduction Evaluation?

___Yes ✓___ No If yes, describe: _____

_____

FACILITY NAME AND PERMIT NUMBER:

Honouliuli Regional Wastewater Treatment Plant - Permit No. HI 00208077

Form Approved 1/14/99
OMB Number 2040-0086

	Test number: HO071000	Test number: HO080500	Test number: HO090200
a. Test information.			
Test species & test method number	T. gratilla (draft method)	T. gratilla (draft method)	T. gratilla (draft method)
Age at initiation of test	Not applicable	Not applicable	Not applicable
Outfall number	001	001	001
Dates sample collected	07/09/00 - 07/10/00	08/04/00 -08/05/00	09/01/00 - 09/02/00
Date test started	07/10/00	08/05/00	09/02/00
Duration	1 hour 20 minutes	1 hour 20 minutes	1 hour 20 minutes
b. Give toxicity test methods followed.			
Manual title	Not applicable	Not applicable	Not applicable
Edition number and year of publication	Not applicable	Not applicable	Not applicable
Page number(s)	Not applicable	Not applicable	Not applicable
c. Give the sample collection method(s) used. For multiple grab samples, indicate the number of grab samples used.			
24-Hour composite	Automatic Flow Composite	Automatic Flow Composite	Automatic Flow Composite
Grab			
d. Indicate where the sample was taken in relation to disinfection. (Check all that apply for each)			
Before disinfection			
After disinfection			
After dechlorination			
e. Describe the point in the treatment process at which the sample was collected.			
Sample was collected:	Downstream from all plant additions	Downstream from all plant additions	Downstream from all plant additions
f. For each test, include whether the test was intended to assess chronic toxicity, acute toxicity, or both.			
Chronic toxicity	✓	✓	✓
Acute toxicity			
g. Provide the type of test performed.			
Static	✓	✓	✓
Static-renewal			
Flow-through			
h. Source of dilution water. If laboratory water, specify type; if receiving water, specify source.			
Laboratory water			
Receiving water	seawater	seawater	seawater
i. Type of dilution water It salt water, specify "natural" or type of artificial sea salts or brine used.			
Fresh water			
Salt water	natural	natural	natural
j. Give the percentage effluent used for all concentrations in the test series.			
	0.00 0.16	0.00 0.16	0.00 0.16
	0.32 0.63	0.32 0.63	0.32 0.63
	1.26 2.52	1.26 2.52	1.26 2.52

FACILITY NAME AND PERMIT NUMBER:

Honouliuli Regional Wastewater Treatment Plant - Permit No. HI 00208077

Form Approved 1/14/99
OMB Number 2040-0086

	Test number: HO071000	Test number: HO080500	Test number: HO090200
k. Parameters measured during the test. (State whether parameter meets test method specifications)			
pH	Yes	Yes	Yes
Salinity	Yes	Yes	Yes
Temperature	Yes	Yes	Yes
Ammonia	Not measured	Not measured	Not measured
Dissolved oxygen	Yes	Yes	Yes
l. Test Results.			
Acute:			
Percent survival in 100% effluent	%	%	%
LC50	%	%	%
95% C.I.	%	%	%
Control percent survival	%	%	%
Other (describe)			
Chronic:			
NOEC REPRODUCTION	1.26 %	2.52 %	1.26 %
IC25	%	%	%
Control percent survival	%	%	%
Other (describe) NOEC SURVIVAL	%	%	%
m. Quality Control/Quality Assurance.			
Is reference toxicant data available?	Yes	Yes	Yes
Was reference toxicant test within acceptable bounds?	Yes	Yes	Yes
What date was reference toxicant test run (MM/DD/YYYY)?	07/10/00	08/05/00	09/02/00
Other (describe)			

E.3. Toxicity Reduction Evaluation . Is the treatment works involved in a Toxicity Reduction Evaluation?

___Yes ✓___ No If yes, describe: _____

FACILITY NAME AND PERMIT NUMBER:

Honouliuli Regional Wastewater Treatment Plant - Permit No. HI 00208077

Form Approved 1/14/99
OMB Number 2040-0086

	Test number: HO100800	Test number: HO111400	Test number: HO121400
a. Test information.			
Test species & test method number	T. gratilla (draft method)	T. gratilla (draft method)	T. gratilla (draft method)
Age at initiation of test	Not applicable	Not applicable	Not applicable
Outfall number	001	001	001
Dates sample collected	10/07/00 - 10/08/00	11/13/00 - 11/14/00	12/13/00 - 12/14/00
Date test started	10/08/00	11/14/00	12/14/00
Duration	1 hour 20 minutes	1 hour 20 minutes	1 hour 20 minutes
b. Give toxicity test methods followed.			
Manual title	Not applicable	Not applicable	Not applicable
Edition number and year of publication	Not applicable	Not applicable	Not applicable
Page number(s)	Not applicable	Not applicable	Not applicable
c. Give the sample collection method(s) used. For multiple grab samples, indicate the number of grab samples used.			
24-Hour composite	Automatic Flow Composite	Automatic Flow Composite	Automatic Flow Composite
Grab			
d. Indicate where the sample was taken in relation to disinfection. (Check all that apply for each)			
Before disinfection			
After disinfection			
After dechlorination			
e. Describe the point in the treatment process at which the sample was collected.			
Sample was collected:	Downstream from all plant additions	Downstream from all plant additions	Downstream from all plant additions
f. For each test, include whether the test was intended to assess chronic toxicity, acute toxicity, or both.			
Chronic toxicity	✓	✓	✓
Acute toxicity			
g. Provide the type of test performed.			
Static	✓	✓	✓
Static-renewal			
Flow-through			
h. Source of dilution water. If laboratory water, specify type; if receiving water, specify source.			
Laboratory water			
Receiving water	seawater	seawater	seawater
i. Type of dilution water. If salt water, specify "natural" or type of artificial sea salts or brine used.			
Fresh water			
Salt water	natural	natural	natural
j. Give the percentage effluent used for all concentrations in the test series.			
	0.00 0.16	0.00 0.16	0.00 0.16
	0.32 0.63	0.32 0.63	0.32 0.63
	1.26 2.52	1.26 2.52	1.26 2.52

FACILITY NAME AND PERMIT NUMBER:

Honouliuli Regional Wastewater Treatment Plant - Permit No. HI 00208077

Form Approved 1/14/99
OMB Number 2040-0086

	Test number: HO100800	Test number: HO111400	Test number: HO121400
k. Parameters measured during the test. (State whether parameter meets test method specifications)			
pH	Yes	Yes	Yes
Salinity	Yes	Yes	Yes
Temperature	Yes	Yes	Yes
Ammonia	Not measured	Not measured	Not measured
Dissolved oxygen	Yes	Yes	Yes
l. Test Results.			
Acute:			
Percent survival in 100% effluent	%	%	%
LC50	%	%	%
95% C.I.	%	%	%
Control percent survival	%	%	%
Other (describe)			
Chronic:			
NOEC REPRODUCTION	1.26 %	2.52 %	0.63 %
IC25	%	%	%
Control percent survival	%	%	%
Other (describe) NOEC SURVIVAL	%	%	%
m. Quality Control/Quality Assurance.			
Is reference toxicant data available?	Yes	Yes	Yes
Was reference toxicant test within acceptable bounds?	Yes	Yes	Yes
What date was reference toxicant test run (MM/DD/YYYY)?	10/08/00	11/14/00	12/14/00
Other (describe)			

E.3. Toxicity Reduction Evaluation . Is the treatment works involved in a Toxicity Reduction Evaluation?

___Yes ✓___ No If yes, describe: _____

FACILITY NAME AND PERMIT NUMBER:

Honouliuli Regional Wastewater Treatment Plant - Permit No. HI 00208077

Form Approved 1/14/99
OMB Number 2040-0086

	Test number: HO010601	Test number: HO020501	Test number: HO030201
a. Test information.			
Test species & test method number	T. gratilla (draft method)	T. gratilla (draft method)	T. gratilla (draft method)
Age at initiation of test	Not applicable	Not applicable	Not applicable
Outfall number	001	001	001
Dates sample collected	01/05/01 - 01/06/01	02/04/01 - 02/05/01	03/01/01 -03/02/01
Date test started	01/06/01	02/05/01	03/02/01
Duration	1 hour 20 minutes	1 hour 20 minutes	1 hour 20 minutes
b. Give toxicity test methods followed.			
Manual title	Not applicable	Not applicable	Not applicable
Edition number and year of publication	Not applicable	Not applicable	Not applicable
Page number(s)	Not applicable	Not applicable	Not applicable
c. Give the sample collection method(s) used. For multiple grab samples, indicate the number of grab samples used.			
24-Hour composite	Automatic Flow Composite	Automatic Flow Composite	Automatic Flow Composite
Grab			
d. Indicate where the sample was taken in relation to disinfection. (Check all that apply for each)			
Before disinfection			
After disinfection			
After dechlorination			
e. Describe the point in the treatment process at which the sample was collected.			
Sample was collected:	Downstream from all plant additions	Downstream from all plant additions	Downstream from all plant additions
f. For each test, include whether the test was intended to assess chronic toxicity, acute toxicity, or both.			
Chronic toxicity	✓	✓	✓
Acute toxicity			
g. Provide the type of test performed.			
Static	✓	✓	✓
Static-renewal			
Flow-through			
h. Source of dilution water. If laboratory water, specify type; if receiving water, specify source.			
Laboratory water			
Receiving water	seawater	seawater	seawater
i. Type of dilution water. If salt water, specify "natural" or type of artificial sea salts or brine used.			
Fresh water			
Salt water	natural	natural	natural
j. Give the percentage effluent used for all concentrations in the test series.			
	0.00 0.16	0.00 0.16	0.00 0.16
	0.32 0.63	0.32 0.63	0.32 0.63
	1.26 2.52	1.26 2.52	1.26 2.52

FACILITY NAME AND PERMIT NUMBER:

Honouliuli Regional Wastewater Treatment Plant - Permit No. HI 00208077

Form Approved 1/14/99
OMB Number 2040-0086

	Test number: HO010601	Test number: HO020501	Test number: HO030201
k. Parameters measured during the test. (State whether parameter meets test method specifications)			
pH	Yes	Yes	Yes
Salinity	Yes	Yes	Yes
Temperature	Yes	Yes	Yes
Ammonia	Not measured	Not measured	Not measured
Dissolved oxygen	Yes	Yes	Yes
l. Test Results.			
Acute:			
Percent survival in 100% effluent	%	%	%
LC50	%	%	%
95% C.I.	%	%	%
Control percent survival	%	%	%
Other (describe)			
Chronic:			
NOEC REPRODUCTION	0.63 %	0.63 %	2.52 %
IC25	%	%	%
Control percent survival	%	%	%
Other (describe) NOEC SURVIVAL	%	%	%
m. Quality Control/Quality Assurance.			
Is reference toxicant data available?	Yes	Yes	Yes
Was reference toxicant test within acceptable bounds?	Yes	Yes	Yes
What date was reference toxicant test run (MM/DD/YYYY)?	01/06/01	02/05/01	03/02/01
Other (describe)			

E.3. Toxicity Reduction Evaluation . Is the treatment works involved in a Toxicity Reduction Evaluation?

___Yes ✓___ No If yes, describe: _____

_____

FACILITY NAME AND PERMIT NUMBER:

Honouliuli Regional Wastewater Treatment Plant - Permit No. HI 00208077

Form Approved 1/14/99
OMB Number 2040-0086

	Test number: HO040701	Test number: HO050601	Test number: HO060601
a. Test information.			
Test species & test method number	T. gratilla (draft method)	T. gratilla (draft method)	T. gratilla (draft method)
Age at initiation of test	Not applicable	Not applicable	Not applicable
Outfall number	001	001	001
Dates sample collected	04/06/01 - 04/07/01	05/05/01 - 05/06/01	06/05/01 - 06/06/01
Date test started	04/07/01	05/06/01	06/06/01
Duration	1 hour 20 minutes	1 hour 20 minutes	1 hour 20 minutes
b. Give toxicity test methods followed.			
Manual title	Not applicable	Not applicable	Not applicable
Edition number and year of publication	Not applicable	Not applicable	Not applicable
Page number(s)	Not applicable	Not applicable	Not applicable
c. Give the sample collection method(s) used. For multiple grab samples, indicate the number of grab samples used.			
24-Hour composite	Automatic Flow Composite	Automatic Flow Composite	Automatic Flow Composite
Grab			
d. Indicate where the sample was taken in relation to disinfection. (Check all that apply for each)			
Before disinfection			
After disinfection			
After dechlorination			
e. Describe the point in the treatment process at which the sample was collected.			
Sample was collected:	Downstream from all plant additions	Downstream from all plant additions	Downstream from all plant additions
f. For each test, include whether the test was intended to assess chronic toxicity, acute toxicity, or both.			
Chronic toxicity	✓	✓	✓
Acute toxicity			
g. Provide the type of test performed.			
Static	✓	✓	✓
Static-renewal			
Flow-through			
h. Source of dilution water. If laboratory water, specify type; if receiving water, specify source.			
Laboratory water			
Receiving water	seawater	seawater	seawater
i. Type of dilution water. If salt water, specify "natural" or type of artificial sea salts or brine used.			
Fresh water			
Salt water	natural	natural	natural
j. Give the percentage effluent used for all concentrations in the test series.			
	0.00 0.16	0.00 0.16	0.00 0.16
	0.32 0.63	0.32 0.63	0.32 0.63
	1.26 2.52	1.26 2.52	1.26 2.52

FACILITY NAME AND PERMIT NUMBER:

Honouliuli Regional Wastewater Treatment Plant - Permit No. HI 00208077

Form Approved 1/14/99
OMB Number 2040-0086

	Test number: HO040701	Test number: HO050601	Test number: HO060601
k. Parameters measured during the test. (State whether parameter meets test method specifications)			
pH	Yes	Yes	Yes
Salinity	Yes	Yes	Yes
Temperature	Yes	Yes	Yes
Ammonia	Not measured	Not measured	Not measured
Dissolved oxygen	Yes	Yes	Yes
l. Test Results.			
Acute:			
Percent survival in 100% effluent	%	%	%
LC50	%	%	%
95% C.I.	%	%	%
Control percent survival	%	%	%
Other (describe)			
Chronic:			
NOEC REPRODUCTION	2.52 %	1.26 %	1.26 %
IC25	%	%	%
Control percent survival	%	%	%
Other (describe) NOEC SURVIVAL	%	%	%
m. Quality Control/Quality Assurance.			
Is reference toxicant data available?	Yes	Yes	Yes
Was reference toxicant test within acceptable bounds?	Yes	Yes	Yes
What date was reference toxicant test run (MM/DD/YYYY)?	04/07/01	05/06/01	06/06/01
Other (describe)			

E.3. Toxicity Reduction Evaluation . Is the treatment works involved in a Toxicity Reduction Evaluation?

___Yes ✓___ No If yes, describe: _____

_____

FACILITY NAME AND PERMIT NUMBER:

Honouliuli Regional Wastewater Treatment Plant - Permit No. HI 00208077

Form Approved 1/14/99
OMB Number 2040-0086

	Test number: HO070701	Test number: HO080401	Test number: HO090801
a. Test information.			
Test species & test method number	T. gratilla (draft method)	T. gratilla (draft method)	T. gratilla (draft method)
Age at initiation of test	Not applicable	Not applicable	Not applicable
Outfall number	001	001	001
Dates sample collected	07/06/01 - 07/07/01	08/03/01 - 08/04/01	09/07/01 - 09/08/01
Date test started	07/07/01	08/04/01	09/08/01
Duration	1 hour 20 minutes	1 hour 20 minutes	1 hour 20 minutes
b. Give toxicity test methods followed.			
Manual title	Not applicable	Not applicable	Not applicable
Edition number and year of publication	Not applicable	Not applicable	Not applicable
Page number(s)	Not applicable	Not applicable	Not applicable
c. Give the sample collection method(s) used. For multiple grab samples, indicate the number of grab samples used.			
24-Hour composite	Automatic Flow Composite	Automatic Flow Composite	Automatic Flow Composite
Grab			
d. Indicate where the sample was taken in relation to disinfection. (Check all that apply for each)			
Before disinfection			
After disinfection			
After dechlorination			
e. Describe the point in the treatment process at which the sample was collected.			
Sample was collected:	Downstream from all plant additions	Downstream from all plant additions	Downstream from all plant additions
f. For each test, include whether the test was intended to assess chronic toxicity, acute toxicity, or both.			
Chronic toxicity	✓	✓	✓
Acute toxicity			
g. Provide the type of test performed.			
Static	✓	✓	✓
Static-renewal			
Flow-through			
h. Source of dilution water. If laboratory water, specify type; if receiving water, specify source.			
Laboratory water			
Receiving water	seawater	seawater	seawater
i. Type of dilution water. If salt water, specify "natural" or type of artificial sea salts or brine used.			
Fresh water			
Salt water	natural	natural	natural
j. Give the percentage effluent used for all concentrations in the test series.			
	0.00 0.16	0.00 0.16	0.00 0.16
	0.32 0.63	0.32 0.63	0.32 0.63
	1.26 2.52	1.26 2.52	1.26 2.52

FACILITY NAME AND PERMIT NUMBER:

Honouliuli Regional Wastewater Treatment Plant - Permit No. HI 00208077

Form Approved 1/14/99
OMB Number 2040-0086

	Test number: HO070701	Test number: HO080401	Test number: HO090801
k. Parameters measured during the test. (State whether parameter meets test method specifications)			
pH	Yes	Yes	Yes
Salinity	Yes	Yes	Yes
Temperature	Yes	Yes	Yes
Ammonia	Not measured	Not measured	Not measured
Dissolved oxygen	Yes	Yes	Yes
l. Test Results.			
Acute:			
Percent survival in 100% effluent	%	%	%
LC50	%	%	%
95% C.I.	%	%	%
Control percent survival	%	%	%
Other (describe)			
Chronic:			
NOEC REPRODUCTION	1.26 %	2.52 %	2.52 %
IC25	%	%	%
Control percent survival	%	%	%
Other (describe) NOEC SURVIVAL	%	%	%
m. Quality Control/Quality Assurance.			
Is reference toxicant data available?	Yes	Yes	Yes
Was reference toxicant test within acceptable bounds?	Yes	Yes	Yes
What date was reference toxicant test run (MM/DD/YYYY)?	07/07/01	08/04/01	09/08/01
Other (describe)			

E.3. Toxicity Reduction Evaluation . Is the treatment works involved in a Toxicity Reduction Evaluation?

____Yes ✓ No If yes, describe: _____

FACILITY NAME AND PERMIT NUMBER:

Honouliuli Regional Wastewater Treatment Plant - Permit No. HI 00208077

Form Approved 1/14/99
OMB Number 2040-0086

	Test number: HO101201	Test number: HO110301	Test number: HO121701
a. Test information.			
Test species & test method number	T. gratilla (draft method)	T. gratilla (draft method)	T. gratilla (draft method)
Age at initiation of test	Not applicable	Not applicable	Not applicable
Outfall number	001	001	001
Dates sample collected	10/11/01 - 10/12/01	11/02/01 - 11/03/01	12/16/01 - 12/17/01
Date test started	10/12/01	11/03/01	12/17/01
Duration	1 hour 20 minutes	1 hour 20 minutes	1 hour 20 minutes
b. Give toxicity test methods followed.			
Manual title	Not applicable	Not applicable	Not applicable
Edition number and year of publication	Not applicable	Not applicable	Not applicable
Page number(s)	Not applicable	Not applicable	Not applicable
c. Give the sample collection method(s) used. For multiple grab samples, indicate the number of grab samples used.			
24-Hour composite	Automatic Flow Composite	Automatic Flow Composite	Automatic Flow Composite
Grab			
d. Indicate where the sample was taken in relation to disinfection. (Check all that apply for each)			
Before disinfection			
After disinfection			
After dechlorination			
e. Describe the point in the treatment process at which the sample was collected.			
Sample was collected:	Downstream from all plant additions	Downstream from all plant additions	Downstream from all plant additions
f. For each test, include whether the test was intended to assess chronic toxicity, acute toxicity, or both.			
Chronic toxicity	✓	✓	✓
Acute toxicity			
g. Provide the type of test performed.			
Static	✓	✓	✓
Static-renewal			
Flow-through			
h. Source of dilution water. If laboratory water, specify type; if receiving water, specify source.			
Laboratory water			
Receiving water	seawater	seawater	seawater
i. Type of dilution water. If salt water, specify "natural" or type of artificial sea salts or brine used.			
Fresh water			
Salt water	natural	natural	natural
j. Give the percentage effluent used for all concentrations in the test series.			
	0.00 0.16	0.00 0.16	0.00 0.16
	0.32 0.63	0.32 0.63	0.32 0.63
	1.26 2.52	1.26 2.52	1.26 2.52

FACILITY NAME AND PERMIT NUMBER:

Honouliuli Regional Wastewater Treatment Plant - Permit No. HI 00208077

Form Approved 1/14/99
OMB Number 2040-0086

	Test number: HO101201	Test number: HO110301	Test number: HO121701
k. Parameters measured during the test. (State whether parameter meets test method specifications)			
pH	Yes	Yes	Yes
Salinity	Yes	Yes	Yes
Temperature	Yes	Yes	Yes
Ammonia	Not measured	Not measured	Not measured
Dissolved oxygen	Yes	Yes	Yes
l. Test Results.			
Acute:			
Percent survival in 100% effluent	%	%	%
LC50	%	%	%
95% C.I.	%	%	%
Control percent survival	%	%	%
Other (describe)			
Chronic:			
NOEC REPRODUCTION	1.26 %	2.52 %	1.26 %
IC25	%	%	%
Control percent survival	%	%	%
Other (describe) NOEC SURVIVAL	%	%	%
m. Quality Control/Quality Assurance.			
Is reference toxicant data available?	Yes	Yes	Yes
Was reference toxicant test within acceptable bounds?	Yes	Yes	Yes
What date was reference toxicant test run (MM/DD/YYYY)?	10/12/01	11/03/01	12/17/01
Other (describe)			

E.3. Toxicity Reduction Evaluation . Is the treatment works involved in a Toxicity Reduction Evaluation?

___Yes ✓___ No If yes, describe: _____

_____

FACILITY NAME AND PERMIT NUMBER:

Honouliuli Regional Wastewater Treatment Plant - Permit No. HI 00208077

Form Approved 1/14/99
OMB Number 2040-0086

	Test number: HO012202	Test number: HO021602	Test number: HO030202
a. Test information.			
Test species & test method number	T. gratilla (draft method)	T. gratilla (draft method)	T. gratilla (draft method)
Age at initiation of test	Not applicable	Not applicable	Not applicable
Outfall number	001	001	001
Dates sample collected	01/21/02 - 01/22/02	02/15/02 - 02/16/02	03/01/02 - 03/02/02
Date test started	01/22/02	02/16/02	03/02/02
Duration	1 hour 20 minutes	1 hour 20 minutes	1 hour 20 minutes
b. Give toxicity test methods followed.			
Manual title	Not applicable	Not applicable	Not applicable
Edition number and year of publication	Not applicable	Not applicable	Not applicable
Page number(s)	Not applicable	Not applicable	Not applicable
c. Give the sample collection method(s) used. For multiple grab samples, indicate the number of grab samples used.			
24-Hour composite	Automatic Flow Composite	Automatic Flow Composite	Automatic Flow Composite
Grab			
d. Indicate where the sample was taken in relation to disinfection. (Check all that apply for each)			
Before disinfection			
After disinfection			
After dechlorination			
e. Describe the point in the treatment process at which the sample was collected.			
Sample was collected:	Downstream from all plant additions	Downstream from all plant additions	Downstream from all plant additions
f. For each test, include whether the test was intended to assess chronic toxicity, acute toxicity, or both.			
Chronic toxicity	✓	✓	✓
Acute toxicity			
g. Provide the type of test performed.			
Static	✓	✓	✓
Static-renewal			
Flow-through			
h. Source of dilution water. If laboratory water, specify type; if receiving water, specify source.			
Laboratory water			
Receiving water	seawater	seawater	seawater
i. Type of dilution water. If salt water, specify "natural" or type of artificial sea salts or brine used.			
Fresh water			
Salt water	natural	natural	natural
j. Give the percentage effluent used for all concentrations in the test series.			
	0.00 0.16	0.00 0.16	0.00 0.16
	0.32 0.63	0.32 0.63	0.32 0.63
	1.26 2.52	1.26 2.52	1.26 2.52

FACILITY NAME AND PERMIT NUMBER:

Honouliuli Regional Wastewater Treatment Plant - Permit No. HI 00208077

Form Approved 1/14/99
OMB Number 2040-0086

	Test number: HO012202	Test number: HO021602	Test number: HO030202
a. Test information.			
Test species & test method number	T. gratilla (draft method)	T. gratilla (draft method)	T. gratilla (draft method)
Age at initiation of test	Not applicable	Not applicable	Not applicable
Outfall number	001	001	001
Dates sample collected	01/21/02 - 01/22/02	02/15/02 - 02/16/02	03/01/02 - 03/02/02
Date test started	01/22/02	02/16/02	03/02/02
Duration	1 hour 20 minutes	1 hour 20 minutes	1 hour 20 minutes
b. Give toxicity test methods followed.			
Manual title	Not applicable	Not applicable	Not applicable
Edition number and year of publication	Not applicable	Not applicable	Not applicable
Page number(s)	Not applicable	Not applicable	Not applicable
c. Give the sample collection method(s) used. For multiple grab samples, indicate the number of grab samples used.			
24-Hour composite	Automatic Flow Composite	Automatic Flow Composite	Automatic Flow Composite
Grab			
d. Indicate where the sample was taken in relation to disinfection. (Check all that apply for each)			
Before disinfection			
After disinfection			
After dechlorination			
e. Describe the point in the treatment process at which the sample was collected.			
Sample was collected:	Downstream from all plant additions	Downstream from all plant additions	Downstream from all plant additions
f. For each test, include whether the test was intended to assess chronic toxicity, acute toxicity, or both.			
Chronic toxicity	✓	✓	✓
Acute toxicity			
g. Provide the type of test performed.			
Static	✓	✓	✓
Static-renewal			
Flow-through			
h. Source of dilution water. If laboratory water, specify type; if receiving water, specify source.			
Laboratory water			
Receiving water	seawater	seawater	seawater
i. Type of dilution water. It salt water, specify "natural" or type of artificial sea salts or brine used.			
Fresh water			
Salt water	natural	natural	natural
j. Give the percentage effluent used for all concentrations in the test series.			
	0.00	0.00	0.00
	0.16	0.16	0.16
	0.32	0.32	0.32
	0.63	0.63	0.63
	1.26	1.26	1.26
	2.52	2.52	2.52

FACILITY NAME AND PERMIT NUMBER:

Honouliuli Regional Wastewater Treatment Plant - Permit No. HI 00208077

Form Approved 1/14/99
OMB Number 2040-0086

	Test number: HO012202	Test number: HO021602	Test number: HO030202
k. Parameters measured during the test. (State whether parameter meets test method specifications)			
pH	Yes	Yes	Yes
Salinity	Yes	Yes	Yes
Temperature	Yes	Yes	Yes
Ammonia	Not measured	Not measured	Not measured
Dissolved oxygen	Yes	Yes	Yes
l. Test Results.			
Acute:			
Percent survival in 100% effluent	%	%	%
LC50	%	%	%
95% C.I.	%	%	%
Control percent survival	%	%	%
Other (describe)			
Chronic:			
NOEC REPRODUCTION	1.26 %	2.52 %	0.32 %
IC25	%	%	%
Control percent survival	%	%	%
Other (describe) NOEC SURVIVAL	%	%	%
m. Quality Control/Quality Assurance.			
Is reference toxicant data available?	Yes	Yes	Yes
Was reference toxicant test within acceptable bounds?	Yes	Yes	Yes
What date was reference toxicant test run (MM/DD/YYYY)?	01/22/02	02/16/02	03/02/02
Other (describe)			

E.3. Toxicity Reduction Evaluation . Is the treatment works involved in a Toxicity Reduction Evaluation?

✓ Yes ____ No If yes, describe:

Results from WET testing on o3/02/02 indicated presence of toxicity that exceeded NPDES permit compliance value. A series of accelerated tests was scheduled to determine persistence of toxicity.

FACILITY NAME AND PERMIT NUMBER:

Honouliuli Regional Wastewater Treatment Plant - Permit No. HI 00208077

Form Approved 1/14/99
OMB Number 2040-0086

	Test number: HO030702	Test number: HO032602	Test number: HO040702
a. Test information.			
Test species & test method number	T. gratilla (draft method)	T. gratilla (draft method)	T. gratilla (draft method)
Age at initiation of test	Not applicable	Not applicable	Not applicable
Outfall number	001	001	001
Dates sample collected	03/06/02 - 03/07/02	03/25/02 - 03/26/02	04/06/02 - 04/07/02
Date test started	03/07/02	03/26/02	04/07/02
Duration	1 hour 20 minutes	1 hour 20 minutes	1 hour 20 minutes
b. Give toxicity test methods followed.			
Manual title	Not applicable	Not applicable	Not applicable
Edition number and year of publication	Not applicable	Not applicable	Not applicable
Page number(s)	Not applicable	Not applicable	Not applicable
c. Give the sample collection method(s) used. For multiple grab samples, indicate the number of grab samples used.			
24-Hour composite	Automatic Flow Composite	Automatic Flow Composite	Automatic Flow Composite
Grab			
d. Indicate where the sample was taken in relation to disinfection. (Check all that apply for each)			
Before disinfection			
After disinfection			
After dechlorination			
e. Describe the point in the treatment process at which the sample was collected.			
Sample was collected:	Downstream from all plant additions	Downstream from all plant additions	Downstream from all plant additions
f. For each test, include whether the test was intended to assess chronic toxicity, acute toxicity, or both.			
Chronic toxicity	✓	✓	✓
Acute toxicity			
g. Provide the type of test performed.			
Static	✓	✓	✓
Static-renewal			
Flow-through			
h. Source of dilution water. If laboratory water, specify type; if receiving water, specify source.			
Laboratory water			
Receiving water	seawater	seawater	seawater
i. Type of dilution water. If salt water, specify "natural" or type of artificial sea salts or brine used.			
Fresh water			
Salt water	natural	natural	natural
j. Give the percentage effluent used for all concentrations in the test series.			
	0.00 0.16	0.00 0.16	0.00 0.16
	0.32 0.63	0.32 0.63	0.32 0.63
	1.26 2.52	1.26 2.52	1.26 2.52

FACILITY NAME AND PERMIT NUMBER:

Honouliuli Regional Wastewater Treatment Plant - Permit No. HI 00208077

Form Approved 1/14/99
OMB Number 2040-0086

	Test number: HO030702	Test number: HO032602	Test number: HO040702
k. Parameters measured during the test. (State whether parameter meets test method specifications)			
pH	Yes	Yes	Yes
Salinity	Yes	Yes	Yes
Temperature	Yes	Yes	Yes
Ammonia	Not measured	Not measured	Not measured
Dissolved oxygen	Yes	Yes	Yes
l. Test Results.			
Acute:			
Percent survival in 100% effluent	%	%	%
LC50	%	%	%
95% C.I.	%	%	%
Control percent survival	%	%	%
Other (describe)			
Chronic:			
NOEC REPRODUCTION	0.32 %	1.26 %	0.16 %
IC25	%	%	%
Control percent survival	%	%	%
Other (describe) NOEC SURVIVAL	%	%	%
m. Quality Control/Quality Assurance.			
Is reference toxicant data available?	Yes	Yes	Yes
Was reference toxicant test within acceptable bounds?	Yes	Yes	Yes
What date was reference toxicant test run (MM/DD/YYYY)?	03/07/02	03/26/02	04/07/02
Other (describe)			

E.3. Toxicity Reduction Evaluation . Is the treatment works involved in a Toxicity Reduction Evaluation?

✓ Yes ____ No If yes, describe:

Results from WET testing on o3/02/02 indicated presence of toxicity that exceeded NPDES permit compliance value. Subsequent accelerated tests indicated intermittent toxic events.

FACILITY NAME AND PERMIT NUMBER:

Honouliuli Regional Wastewater Treatment Plant - Permit No. HI 00208077

Form Approved 1/14/99
OMB Number 2040-0086

	Test number: HO041802	Test number: HO042502	Test number: HO050302
a. Test information.			
Test species & test method number	T. gratilla (draft method)	T. gratilla (draft method)	T. gratilla (draft method)
Age at initiation of test	Not applicable	Not applicable	Not applicable
Outfall number	001	001	001
Dates sample collected	04/17/02 - 04/18/02	04/24/02 - 04/25/02	05/02/02 - 05/03/02
Date test started	04/18/02	04/25/02	05/03/02
Duration	1 hour 20 minutes	1 hour 20 minutes	1 hour 20 minutes
b. Give toxicity test methods followed.			
Manual title	Not applicable	Not applicable	Not applicable
Edition number and year of publication	Not applicable	Not applicable	Not applicable
Page number(s)	Not applicable	Not applicable	Not applicable
c. Give the sample collection method(s) used. For multiple grab samples, indicate the number of grab samples used.			
24-Hour composite	Automatic Flow Composite	Automatic Flow Composite	Automatic Flow Composite
Grab			
d. Indicate where the sample was taken in relation to disinfection. (Check all that apply for each)			
Before disinfection			
After disinfection			
After dechlorination			
e. Describe the point in the treatment process at which the sample was collected.			
Sample was collected:	Downstream from all plant additions	Downstream from all plant additions	Downstream from all plant additions
f. For each test, include whether the test was intended to assess chronic toxicity, acute toxicity, or both.			
Chronic toxicity	✓	✓	✓
Acute toxicity			
g. Provide the type of test performed.			
Static	✓	✓	✓
Static-renewal			
Flow-through			
h. Source of dilution water. If laboratory water, specify type; if receiving water, specify source.			
Laboratory water			
Receiving water	seawater	seawater	seawater
i. Type of dilution water. If salt water, specify "natural" or type of artificial sea salts or brine used.			
Fresh water			
Salt water	natural	natural	natural
j. Give the percentage effluent used for all concentrations in the test series.			
	0.00 0.16	0.00 0.16	0.00 0.16
	0.32 0.63	0.32 0.63	0.32 0.63
	1.26 2.52	1.26 2.52	1.26 2.52

FACILITY NAME AND PERMIT NUMBER:

Honouliuli Regional Wastewater Treatment Plant - Permit No. HI 00208077

Form Approved 1/14/99
OMB Number 2040-0086

	Test number: HO041802	Test number: HO042502	Test number: HO050302
k. Parameters measured during the test. (State whether parameter meets test method specifications)			
pH	Yes	Yes	Yes
Salinity	Yes	Yes	Yes
Temperature	Yes	Yes	Yes
Ammonia	Not measured	Not measured	Not measured
Dissolved oxygen	Yes	Yes	Yes
l. Test Results.			
Acute:			
Percent survival in 100% effluent	%	%	%
LC50	%	%	%
95% C.I.	%	%	%
Control percent survival	%	%	%
Other (describe)			
Chronic:			
NOEC REPRODUCTION	0.16 %	0.32 %	<0.16 %
IC25	%	%	%
Control percent survival	%	%	%
Other (describe) NOEC SURVIVAL	%	%	%
m. Quality Control/Quality Assurance.			
Is reference toxicant data available?	Yes	Yes	Yes
Was reference toxicant test within acceptable bounds?	Yes	Yes	Yes
What date was reference toxicant test run (MM/DD/YYYY)?	04/18/02	04/25/02	05/03/02
Other (describe)			

E.3. Toxicity Reduction Evaluation . Is the treatment works involved in a Toxicity Reduction Evaluation?

✓ Yes ____ No If yes, describe:

Results from WET testing on o3/02/02 indicated presence of toxicity that exceeded NPDES permit compliance value. Subsequent accelerated tests indicated intermittent toxic events. Toxicity Identification investigations based on the response of *Photobactereum phosphoreum* showed that toxicants were nonpolar in nature.

FACILITY NAME AND PERMIT NUMBER:

Honouliuli Regional Wastewater Treatment Plant - Permit No. HI 00208077

Form Approved 1/14/99
OMB Number 2040-0086

	Test number: HO051002	Test number: HO051602	Test number: HO052102
a. Test information.			
Test species & test method number	T. gratilla (draft method)	T. gratilla (draft method)	T. gratilla (draft method)
Age at initiation of test	Not applicable	Not applicable	Not applicable
Outfall number	001	001	001
Dates sample collected	05/09/02 - 05/10/02	05/15/02 - 05/16/02	05/20/02 - 05/21/02
Date test started	05/10/02	05/16/02	05/21/02
Duration	1 hour 20 minutes	1 hour 20 minutes	1 hour 20 minutes
b. Give toxicity test methods followed.			
Manual title	Not applicable	Not applicable	Not applicable
Edition number and year of publication	Not applicable	Not applicable	Not applicable
Page number(s)	Not applicable	Not applicable	Not applicable
c. Give the sample collection method(s) used. For multiple grab samples, indicate the number of grab samples used.			
24-Hour composite	Automatic Flow Composite	Automatic Flow Composite	Automatic Flow Composite
Grab			
d. Indicate where the sample was taken in relation to disinfection. (Check all that apply for each)			
Before disinfection			
After disinfection			
After dechlorination			
e. Describe the point in the treatment process at which the sample was collected.			
Sample was collected:	Downstream from all plant additions	Downstream from all plant additions	Downstream from all plant additions
f. For each test, include whether the test was intended to assess chronic toxicity, acute toxicity, or both.			
Chronic toxicity	✓	✓	✓
Acute toxicity			
g. Provide the type of test performed.			
Static	✓	✓	✓
Static-renewal			
Flow-through			
h. Source of dilution water. If laboratory water, specify type; if receiving water, specify source.			
Laboratory water			
Receiving water	seawater	seawater	seawater
i. Type of dilution water. If salt water, specify "natural" or type of artificial sea salts or brine used.			
Fresh water			
Salt water	natural	natural	natural
j. Give the percentage effluent used for all concentrations in the test series.			
	0.00 0.16	0.00 0.16	0.00 0.16
	0.32 0.63	0.32 0.63	0.32 0.63
	1.26 2.52	1.26 2.52	1.26 2.52

FACILITY NAME AND PERMIT NUMBER:

Honouliuli Regional Wastewater Treatment Plant - Permit No. HI 00208077

Form Approved 1/14/99
OMB Number 2040-0086

	Test number: HO051002	Test number: HO051602	Test number: HO052102
k. Parameters measured during the test. (State whether parameter meets test method specifications)			
pH	Yes	Yes	Yes
Salinity	Yes	Yes	Yes
Temperature	Yes	Yes	Yes
Ammonia	Not measured	Not measured	Not measured
Dissolved oxygen	Yes	Yes	Yes
l. Test Results.			
Acute:			
Percent survival in 100% effluent	%	%	%
LC50	%	%	%
95% C.I.	%	%	%
Control percent survival	%	%	%
Other (describe)			
Chronic:			
NOEC REPRODUCTION	0.63 %	0.63 %	0.63 %
IC25	%	%	%
Control percent survival	%	%	%
Other (describe) NOEC SURVIVAL	%	%	%
m. Quality Control/Quality Assurance.			
Is reference toxicant data available?	Yes	Yes	Yes
Was reference toxicant test within acceptable bounds?	Yes	Yes	Yes
What date was reference toxicant test run (MM/DD/YYYY)?	05/10/02	05/16/02	05/21/02
Other (describe)			

E.3. Toxicity Reduction Evaluation . Is the treatment works involved in a Toxicity Reduction Evaluation?

✓ Yes ____ No If yes, describe:

Results from WET testing on 03/02/02 indicated presence of toxicity that exceeded NPDES permit compliance value. This toxicity was not detected in samples collected weekly from 05/09/02 to 06/13/02. Monthly WET monitoring was subsequently resumed.

FACILITY NAME AND PERMIT NUMBER:

Honouliuli Regional Wastewater Treatment Plant - Permit No. HI 00208077

Form Approved 1/14/99
OMB Number 2040-0086

	Test number: HO053002	Test number: HO060502	Test number: HO061302
a. Test information.			
Test species & test method number	T. gratilla (draft method)	T. gratilla (draft method)	T. gratilla (draft method)
Age at initiation of test	Not applicable	Not applicable	Not applicable
Outfall number	001	001	001
Dates sample collected	05/29/02 - 05/30/02	06/04/02 - 06/05/02	06/12/02 - 06/13/02
Date test started	05/30/02	06/05/02	06/13/02
Duration	1 hour 20 minutes	1 hour 20 minutes	1 hour 20 minutes
b. Give toxicity test methods followed.			
Manual title	Not applicable	Not applicable	Not applicable
Edition number and year of publication	Not applicable	Not applicable	Not applicable
Page number(s)	Not applicable	Not applicable	Not applicable
c. Give the sample collection method(s) used. For multiple grab samples, indicate the number of grab samples used.			
24-Hour composite	Automatic Flow Composite	Automatic Flow Composite	Automatic Flow Composite
Grab			
d. Indicate where the sample was taken in relation to disinfection. (Check all that apply for each)			
Before disinfection			
After disinfection			
After dechlorination			
e. Describe the point in the treatment process at which the sample was collected.			
Sample was collected:	Downstream from all plant additions	Downstream from all plant additions	Downstream from all plant additions
f. For each test, include whether the test was intended to assess chronic toxicity, acute toxicity, or both.			
Chronic toxicity	✓	✓	✓
Acute toxicity			
g. Provide the type of test performed.			
Static	✓	✓	✓
Static-renewal			
Flow-through			
h. Source of dilution water. If laboratory water, specify type; if receiving water, specify source.			
Laboratory water			
Receiving water	seawater	seawater	seawater
i. Type of dilution water. If salt water, specify "natural" or type of artificial sea salts or brine used.			
Fresh water			
Salt water	natural	natural	natural
j. Give the percentage effluent used for all concentrations in the test series.			
	0.00 0.16	0.00 0.16	0.00 0.16
	0.32 0.63	0.32 0.63	0.32 0.63
	1.26 2.52	1.26 2.52	1.26 2.52

FACILITY NAME AND PERMIT NUMBER:

Honouliuli Regional Wastewater Treatment Plant - Permit No. HI 00208077

Form Approved 1/14/99
OMB Number 2040-0086

	Test number: HO053002	Test number: HO060502	Test number: HO061302
k. Parameters measured during the test. (State whether parameter meets test method specifications)			
pH	Yes	Yes	Yes
Salinity	Yes	Yes	Yes
Temperature	Yes	Yes	Yes
Ammonia	Not measured	Not measured	Not measured
Dissolved oxygen	Yes	Yes	Yes
l. Test Results.			
Acute:			
Percent survival in 100% effluent	%	%	%
LC50	%	%	%
95% C.I.	%	%	%
Control percent survival	%	%	%
Other (describe)			
Chronic:			
NOEC REPRODUCTION	1.26 %	1.26 %	1.26 %
IC25	%	%	%
Control percent survival	%	%	%
Other (describe) NOEC SURVIVAL	%	%	%
m. Quality Control/Quality Assurance.			
Is reference toxicant data available?	Yes	Yes	Yes
Was reference toxicant test within acceptable bounds?	Yes	Yes	Yes
What date was reference toxicant test run (MM/DD/YYYY)?	05/30/02	06/05/02	06/13/02
Other (describe)			

E.3. Toxicity Reduction Evaluation . Is the treatment works involved in a Toxicity Reduction Evaluation?

✓ Yes ____ No If yes, describe:

Results from WET testing on 03/02/02 indicated presence of toxicity that exceeded NPDES permit compliance value. This toxicity was not detected in samples collected weekly from 05/09/02 to 06/13/02. Monthly WET monitoring was subsequently resumed.

FACILITY NAME AND PERMIT NUMBER:

Honouliuli Regional Wastewater Treatment Plant - Permit No. HI 00208077

Form Approved 1/14/99
OMB Number 2040-0086

	Test number: HO070802	Test number: HO080602	Test number: HO090602
a. Test information.			
Test species & test method number	T. gratilla (draft method)	T. gratilla (draft method)	T. gratilla (draft method)
Age at initiation of test	Not applicable	Not applicable	Not applicable
Outfall number	001	001	001
Dates sample collected	07/07/02 - 07/08/02	08/05/02 - 08/06/02	09/05/02 - 09/06/02
Date test started	07/08/02	08/06/02	09/06/02
Duration	1 hour 20 minutes	1 hour 20 minutes	1 hour 20 minutes
b. Give toxicity test methods followed.			
Manual title	Not applicable	Not applicable	Not applicable
Edition number and year of publication	Not applicable	Not applicable	Not applicable
Page number(s)	Not applicable	Not applicable	Not applicable
c. Give the sample collection method(s) used. For multiple grab samples, indicate the number of grab samples used.			
24-Hour composite	Automatic Flow Composite	Automatic Flow Composite	Automatic Flow Composite
Grab			
d. Indicate where the sample was taken in relation to disinfection. (Check all that apply for each)			
Before disinfection			
After disinfection			
After dechlorination			
e. Describe the point in the treatment process at which the sample was collected.			
Sample was collected:	Downstream from all plant additions	Downstream from all plant additions	Downstream from all plant additions
f. For each test, include whether the test was intended to assess chronic toxicity, acute toxicity, or both.			
Chronic toxicity	✓	✓	✓
Acute toxicity			
g. Provide the type of test performed.			
Static	✓	✓	✓
Static-renewal			
Flow-through			
h. Source of dilution water. If laboratory water, specify type; if receiving water, specify source.			
Laboratory water			
Receiving water	seawater	seawater	seawater
i. Type of dilution water. If salt water, specify "natural" or type of artificial sea salts or brine used.			
Fresh water			
Salt water	natural	natural	natural
j. Give the percentage effluent used for all concentrations in the test series.			
	0.00 0.16	0.00 0.16	0.00 0.16
	0.32 0.63	0.32 0.63	0.32 0.63
	1.26 2.52	1.26 2.52	1.26 2.52

FACILITY NAME AND PERMIT NUMBER:

Honouliuli Regional Wastewater Treatment Plant - Permit No. HI 00208077

Form Approved 1/14/99
OMB Number 2040-0086

	Test number: HO070802	Test number: HO080602	Test number: HO090602
k. Parameters measured during the test. (State whether parameter meets test method specifications)			
pH	Yes	Yes	Yes
Salinity	Yes	Yes	Yes
Temperature	Yes	Yes	Yes
Ammonia	Not measured	Not measured	Not measured
Dissolved oxygen	Yes	Yes	Yes
l. Test Results.			
Acute:			
Percent survival in 100% effluent	%	%	%
LC50	%	%	%
95% C.I.	%	%	%
Control percent survival	%	%	%
Other (describe)			
Chronic:			
NOEC REPRODUCTION	0.63 %	1.26 %	< 0.16 %
IC25	%	%	%
Control percent survival	%	%	%
Other (describe) NOEC SURVIVAL	%	%	%
m. Quality Control/Quality Assurance.			
Is reference toxicant data available?	Yes	Yes	Yes
Was reference toxicant test within acceptable bounds?	Yes	Yes	Yes
What date was reference toxicant test run (MM/DD/YYYY)?	07/08/02	08/06/02	09/06/02
Other (describe)			

E.3. Toxicity Reduction Evaluation . Is the treatment works involved in a Toxicity Reduction Evaluation?

✓ Yes ____ No If yes, describe:

Results from WET testing on 09/06/02 indicated presence of toxicity that exceeded NPDES permit compliance value. A series of accelerated tests was scheduled to determine persistence of toxicity.

FACILITY NAME AND PERMIT NUMBER:

Honouliuli Regional Wastewater Treatment Plant - Permit No. HI 00208077

Form Approved 1/14/99
OMB Number 2040-0086

	Test number: HO091402	Test number: HO091902	Test number: HO092702
a. Test information.			
Test species & test method number	T. gratilla (draft method)	T. gratilla (draft method)	T. gratilla (draft method)
Age at initiation of test	Not applicable	Not applicable	Not applicable
Outfall number	001	001	001
Dates sample collected	09/13/02 - 09/14/02	09/18/02 - 09/19/02	09/26/02 -09/27/02
Date test started	09/14/02	09/19/02	09/27/02
Duration	1 hour 20 minutes	1 hour 20 minutes	1 hour 20 minutes
b. Give toxicity test methods followed.			
Manual title	Not applicable	Not applicable	Not applicable
Edition number and year of publication	Not applicable	Not applicable	Not applicable
Page number(s)	Not applicable	Not applicable	Not applicable
c. Give the sample collection method(s) used. For multiple grab samples, indicate the number of grab samples used.			
24-Hour composite	Automatic Flow Composite	Automatic Flow Composite	Automatic Flow Composite
Grab			
d. Indicate where the sample was taken in relation to disinfection. (Check all that apply for each)			
Before disinfection			
After disinfection			
After dechlorination			
e. Describe the point in the treatment process at which the sample was collected.			
Sample was collected:	Downstream from all plant additions	Downstream from all plant additions	Downstream from all plant additions
f. For each test, include whether the test was intended to assess chronic toxicity, acute toxicity, or both.			
Chronic toxicity	✓	✓	✓
Acute toxicity			
g. Provide the type of test performed.			
Static	✓	✓	✓
Static-renewal			
Flow-through			
h. Source of dilution water. If laboratory water, specify type; if receiving water, specify source.			
Laboratory water			
Receiving water	seawater	seawater	seawater
i. Type of dilution water. If salt water, specify "natural" or type of artificial sea salts or brine used.			
Fresh water			
Salt water	natural	natural	natural
j. Give the percentage effluent used for all concentrations in the test series.			
	0.00 0.16	0.00 0.16	0.00 0.16
	0.32 0.63	0.32 0.63	0.32 0.63
	1.26 2.52	1.26 2.52	1.26 2.52

FACILITY NAME AND PERMIT NUMBER:

Honouliuli Regional Wastewater Treatment Plant - Permit No. HI 00208077

Form Approved 1/14/99
OMB Number 2040-0086

	Test number: HO091402	Test number: HO091902	Test number: HO092702
k. Parameters measured during the test. (State whether parameter meets test method specifications)			
pH	Yes	Yes	Yes
Salinity	Yes	Yes	Yes
Temperature	Yes	Yes	Yes
Ammonia	Not measured	Not measured	Not measured
Dissolved oxygen	Yes	Yes	Yes
l. Test Results.			
Acute:			
Percent survival in 100% effluent	%	%	%
LC50	%	%	%
95% C.I.	%	%	%
Control percent survival	%	%	%
Other (describe)			
Chronic:			
NOEC REPRODUCTION	<0.16 %	<0.16 %	0.16 %
IC25	%	%	%
Control percent survival	%	%	%
Other (describe) NOEC SURVIVAL	%	%	%
m. Quality Control/Quality Assurance.			
Is reference toxicant data available?	Yes	Yes	Yes
Was reference toxicant test within acceptable bounds?	Yes	Yes	Yes
What date was reference toxicant test run (MM/DD/YYYY)?	09/14/02	09/19/02	09/27/02
Other (describe)			

E.3. Toxicity Reduction Evaluation . Is the treatment works involved in a Toxicity Reduction Evaluation?

✓ Yes ____ No If yes, describe:

Results from WET testing on 09/06/02 showed presence of toxicity in the effluent that exceeded NPDES permit compliance value. The first three of the series of accelerated tests showed toxicity to *T. gratilla* gametes. TIE studies indicated that toxicity was organic in nature, associated with particulates, not associated with oxidants and cations like Pb or Cu, and not due to ammonia.

FACILITY NAME AND PERMIT NUMBER:

Honouliuli Regional Wastewater Treatment Plant - Permit No. HI 00208077

Form Approved 1/14/99
OMB Number 2040-0086

	Test number: HO100202	Test number: HO100902	Test number: HO101602
a. Test information.			
Test species & test method number	T. gratilla (draft method)	T. gratilla (draft method)	T. gratilla (draft method)
Age at initiation of test	Not applicable	Not applicable	Not applicable
Outfall number	001	001	001
Dates sample collected	10/01/02 - 10/02/02	10/08/02 - 10/09/02	10/15/02 - 10/16/02
Date test started	10/14/02	10/09/02	10/16/02
Duration	1 hour 20 minutes	1 hour 20 minutes	1 hour 20 minutes
b. Give toxicity test methods followed.			
Manual title	Not applicable	Not applicable	Not applicable
Edition number and year of publication	Not applicable	Not applicable	Not applicable
Page number(s)	Not applicable	Not applicable	Not applicable
c. Give the sample collection method(s) used. For multiple grab samples, indicate the number of grab samples used.			
24-Hour composite	Automatic Flow Composite	Automatic Flow Composite	Automatic Flow Composite
Grab			
d. Indicate where the sample was taken in relation to disinfection. (Check all that apply for each)			
Before disinfection			
After disinfection			
After dechlorination			
e. Describe the point in the treatment process at which the sample was collected.			
Sample was collected:	Downstream from all plant additions	Downstream from all plant additions	Downstream from all plant additions
f. For each test, include whether the test was intended to assess chronic toxicity, acute toxicity, or both.			
Chronic toxicity	✓	✓	✓
Acute toxicity			
g. Provide the type of test performed.			
Static	✓	✓	✓
Static-renewal			
Flow-through			
h. Source of dilution water. If laboratory water, specify type; if receiving water, specify source.			
Laboratory water			
Receiving water	seawater	seawater	seawater
i. Type of dilution water. If salt water, specify "natural" or type of artificial sea salts or brine used.			
Fresh water			
Salt water	natural	natural	natural
j. Give the percentage effluent used for all concentrations in the test series.			
	0.00	0.00	0.00
	0.16	0.16	0.16
	0.32	0.32	0.32
	0.63	0.63	0.63
	1.26	1.26	1.26
	2.52	2.52	2.52

FACILITY NAME AND PERMIT NUMBER:

Honouliuli Regional Wastewater Treatment Plant - Permit No. HI 00208077

Form Approved 1/14/99
OMB Number 2040-0086

	Test number: HO100202	Test number: HO100902	Test number: HO101602
k. Parameters measured during the test. (State whether parameter meets test method specifications)			
pH	Yes	Yes	Yes
Salinity	Yes	Yes	Yes
Temperature	Yes	Yes	Yes
Ammonia	Not measured	Not measured	Not measured
Dissolved oxygen	Yes	Yes	Yes
l. Test Results.			
Acute:			
Percent survival in 100% effluent	%	%	%
LC50	%	%	%
95% C.I.	%	%	%
Control percent survival	%	%	%
Other (describe)			
Chronic:			
NOEC REPRODUCTION	1.26 %	1.26 %	1.26 %
IC25	%	%	%
Control percent survival	%	%	%
Other (describe) NOEC SURVIVAL	%	%	%
m. Quality Control/Quality Assurance.			
Is reference toxicant data available?	Yes	Yes	Yes
Was reference toxicant test within acceptable bounds?	Yes	Yes	Yes
What date was reference toxicant test run (MM/DD/YYYY)?	10/14/02	10/09/02	10/16/02
Other (describe)			

E.3. Toxicity Reduction Evaluation . Is the treatment works involved in a Toxicity Reduction Evaluation?

✓ Yes ____ No If yes, describe:

Results from WET testing on 09/06/02 showed presence of toxicity in the effluent that exceeded NPDES permit compliance value. The first three of the series of accelerated tests showed toxicity to *T. gratilla* gametes but the subsequent five weekly effluent samples were not toxic .

FACILITY NAME AND PERMIT NUMBER:

Honouliuli Regional Wastewater Treatment Plant - Permit No. HI 00208077

Form Approved 1/14/99
OMB Number 2040-0086

	Test number: HO102302	Test number: HO103002	Test number: HO110402
a. Test information.			
Test species & test method number	T. gratilla (draft method)	T. gratilla (draft method)	T. gratilla (draft method)
Age at initiation of test	Not applicable	Not applicable	Not applicable
Outfall number	001	001	001
Dates sample collected	10/22/02 - 10/23/02	10/29/02 - 10/30/02	10/03/02 - 11/04/02
Date test started	10/23/02	10/30/02	11/04/02
Duration	1 hour 20 minutes	1 hour 20 minutes	1 hour 20 minutes
b. Give toxicity test methods followed.			
Manual title	Not applicable	Not applicable	Not applicable
Edition number and year of publication	Not applicable	Not applicable	Not applicable
Page number(s)	Not applicable	Not applicable	Not applicable
c. Give the sample collection method(s) used. For multiple grab samples, indicate the number of grab samples used.			
24-Hour composite	Automatic Flow Composite	Automatic Flow Composite	Automatic Flow Composite
Grab			
d. Indicate where the sample was taken in relation to disinfection. (Check all that apply for each)			
Before disinfection			
After disinfection			
After dechlorination			
e. Describe the point in the treatment process at which the sample was collected.			
Sample was collected:	Downstream from all plant additions	Downstream from all plant additions	Downstream from all plant additions
f. For each test, include whether the test was intended to assess chronic toxicity, acute toxicity, or both.			
Chronic toxicity	✓	✓	✓
Acute toxicity			
g. Provide the type of test performed.			
Static	✓	✓	✓
Static-renewal			
Flow-through			
h. Source of dilution water. If laboratory water, specify type; if receiving water, specify source.			
Laboratory water			
Receiving water	seawater	seawater	seawater
i. Type of dilution water. If salt water, specify "natural" or type of artificial sea salts or brine used.			
Fresh water			
Salt water	natural	natural	natural
j. Give the percentage effluent used for all concentrations in the test series.			
	0.00 0.16	0.00 0.16	0.00 0.16
	0.32 0.63	0.32 0.63	0.32 0.63
	1.26 2.52	1.26 2.52	1.26 2.52

FACILITY NAME AND PERMIT NUMBER:

Honouliuli Regional Wastewater Treatment Plant - Permit No. HI 00208077

Form Approved 1/14/99
OMB Number 2040-0086

	Test number: HO102302	Test number: HO103002	Test number: HO110402
k. Parameters measured during the test. (State whether parameter meets test method specifications)			
pH	Yes	Yes	Yes
Salinity	Yes	Yes	Yes
Temperature	Yes	Yes	Yes
Ammonia	Not measured	Not measured	Not measured
Dissolved oxygen	Yes	Yes	Yes
l. Test Results.			
Acute:			
Percent survival in 100% effluent	%	%	%
LC50	%	%	%
95% C.I.	%	%	%
Control percent survival	%	%	%
Other (describe)			
Chronic:			
NOEC REPRODUCTION	0.63 %	1.26 %	0.16 %
IC25	%	%	%
Control percent survival	%	%	%
Other (describe) NOEC SURVIVAL	%	%	%
m. Quality Control/Quality Assurance.			
Is reference toxicant data available?	Yes	Yes	Yes
Was reference toxicant test within acceptable bounds?	Yes	Yes	Yes
What date was reference toxicant test run (MM/DD/YYYY)?	10/23/02	10/30/02	11/04/02
Other (describe)			

E.3. Toxicity Reduction Evaluation. Is the treatment works involved in a Toxicity Reduction Evaluation?

✓ Yes ____ No If yes, describe:

Results from WET testing on 09/06/02 showed presence of toxicity in the effluent that exceeded NPDES permit compliance value. Intermittent toxicity was observed in the subsequent weekly samples. TIE manipulations indicated that toxicants were associated with particulate material and partly organic in nature.

FACILITY NAME AND PERMIT NUMBER:

Honouliuli Regional Wastewater Treatment Plant - Permit No. HI 00208077

Form Approved 1/14/99
OMB Number 2040-0086

	Test number: HO111202	Test number: HO112102	Test number: HO112602
a. Test information.			
Test species & test method number	T. gratilla (draft method)	T. gratilla (draft method)	T. gratilla (draft method)
Age at initiation of test	Not applicable	Not applicable	Not applicable
Outfall number	001	001	001
Dates sample collected	11/11/02 - 11/12/02	11/20/02 - 11/21/02	11/25/02 - 11/26/02
Date test started	11/12/02	11/21/02	11/26/02
Duration	1 hour 20 minutes	1 hour 20 minutes	1 hour 20 minutes
b. Give toxicity test methods followed.			
Manual title	Not applicable	Not applicable	Not applicable
Edition number and year of publication	Not applicable	Not applicable	Not applicable
Page number(s)	Not applicable	Not applicable	Not applicable
c. Give the sample collection method(s) used. For multiple grab samples, indicate the number of grab samples used.			
24-Hour composite	Automatic Flow Composite	Automatic Flow Composite	Automatic Flow Composite
Grab			
d. Indicate where the sample was taken in relation to disinfection. (Check all that apply for each)			
Before disinfection			
After disinfection			
After dechlorination			
e. Describe the point in the treatment process at which the sample was collected.			
Sample was collected:	Downstream from all plant additions	Downstream from all plant additions	Downstream from all plant additions
f. For each test, include whether the test was intended to assess chronic toxicity, acute toxicity, or both.			
Chronic toxicity	✓	✓	✓
Acute toxicity			
g. Provide the type of test performed.			
Static	✓	✓	✓
Static-renewal			
Flow-through			
h. Source of dilution water. If laboratory water, specify type; if receiving water, specify source.			
Laboratory water			
Receiving water	seawater	seawater	seawater
i. Type of dilution water. If salt water, specify "natural" or type of artificial sea salts or brine used.			
Fresh water			
Salt water	natural	natural	natural
j. Give the percentage effluent used for all concentrations in the test series.			
	0.00 0.16	0.00 0.16	0.00 0.16
	0.32 0.63	0.32 0.63	0.32 0.63
	1.26 2.52	1.26 2.52	1.26 2.52

FACILITY NAME AND PERMIT NUMBER:

Honouliuli Regional Wastewater Treatment Plant - Permit No. HI 00208077

Form Approved 1/14/99
OMB Number 2040-0086

	Test number: HO111202	Test number: HO112102	Test number: HO112602
k. Parameters measured during the test. (State whether parameter meets test method specifications)			
pH	Yes	Yes	Yes
Salinity	Yes	Yes	Yes
Temperature	Yes	Yes	Yes
Ammonia	Not measured	Not measured	Not measured
Dissolved oxygen	Yes	Yes	Yes
l. Test Results.			
Acute:			
Percent survival in 100% effluent	%	%	%
LC50	%	%	%
95% C.I.	%	%	%
Control percent survival	%	%	%
Other (describe)			
Chronic:			
NOEC REPRODUCTION	0.63 %	1.26 %	0.16 %
IC25	%	%	%
Control percent survival	%	%	%
Other (describe) NOEC SURVIVAL	%	%	%
m. Quality Control/Quality Assurance.			
Is reference toxicant data available?	Yes	Yes	Yes
Was reference toxicant test within acceptable bounds?	Yes	Yes	Yes
What date was reference toxicant test run (MM/DD/YYYY)?	11/12/02	11/21/02	11/26/02
Other (describe)			

E.3. Toxicity Reduction Evaluation . Is the treatment works involved in a Toxicity Reduction Evaluation?

✓ Yes ____ No If yes, describe:

Results from WET testing on 09/06/02 showed presence of toxicity in the effluent that exceeded NPDES permit compliance value. Intermittent toxicity was observed in the subsequent weekly samples. TIE manipulations indicated that toxicants were associated with particulate material and partly organic in nature.

FACILITY NAME AND PERMIT NUMBER:

Honouliuli Regional Wastewater Treatment Plant - Permit No. HI 00208077

Form Approved 1/14/99
OMB Number 2040-0086

	Test number: HO120302	Test number: HO121002	Test number: HO121702
a. Test information.			
Test species & test method number	T. gratilla (draft method)	T. gratilla (draft method)	T. gratilla (draft method)
Age at initiation of test	Not applicable	Not applicable	Not applicable
Outfall number	001	001	001
Dates sample collected	12/02/02 - 12/03/02	12/09/02 - 12/10/02	12/16/02 - 12/17/02
Date test started	12/03/02	12/10/02	12/17/02
Duration	1 hour 20 minutes	1 hour 20 minutes	1 hour 20 minutes
b. Give toxicity test methods followed.			
Manual title	Not applicable	Not applicable	Not applicable
Edition number and year of publication	Not applicable	Not applicable	Not applicable
Page number(s)	Not applicable	Not applicable	Not applicable
c. Give the sample collection method(s) used. For multiple grab samples, indicate the number of grab samples used.			
24-Hour composite	Automatic Flow Composite	Automatic Flow Composite	Automatic Flow Composite
Grab			
d. Indicate where the sample was taken in relation to disinfection. (Check all that apply for each)			
Before disinfection			
After disinfection			
After dechlorination			
e. Describe the point in the treatment process at which the sample was collected.			
Sample was collected:	Downstream from all plant additions	Downstream from all plant additions	Downstream from all plant additions
f. For each test, include whether the test was intended to assess chronic toxicity, acute toxicity, or both.			
Chronic toxicity	✓	✓	✓
Acute toxicity			
g. Provide the type of test performed.			
Static	✓	✓	✓
Static-renewal			
Flow-through			
h. Source of dilution water. If laboratory water, specify type; if receiving water, specify source.			
Laboratory water			
Receiving water	seawater	seawater	seawater
i. Type of dilution water. If salt water, specify "natural" or type of artificial sea salts or brine used.			
Fresh water			
Salt water	natural	natural	natural
j. Give the percentage effluent used for all concentrations in the test series.			
	0.00 0.16	0.00 0.16	0.00 0.16
	0.32 0.63	0.32 0.63	0.32 0.63
	1.26 2.52	1.26 2.52	1.26 2.52

FACILITY NAME AND PERMIT NUMBER:

Honouliuli Regional Wastewater Treatment Plant - Permit No. HI 00208077

Form Approved 1/14/99
OMB Number 2040-0086

	Test number: HO120302	Test number: HO121002	Test number: HO121702
k. Parameters measured during the test. (State whether parameter meets test method specifications)			
pH	Yes	Yes	Yes
Salinity	Yes	Yes	Yes
Temperature	Yes	Yes	Yes
Ammonia	Not measured	Not measured	Not measured
Dissolved oxygen	Yes	Yes	Yes
l. Test Results.			
Acute:			
Percent survival in 100% effluent	%	%	%
LC50	%	%	%
95% C.I.	%	%	%
Control percent survival	%	%	%
Other (describe)			
Chronic:			
NOEC REPRODUCTION	0.63 %	1.26 %	0.16 %
IC25	%	%	%
Control percent survival	%	%	%
Other (describe) NOEC SURVIVAL	%	%	%
m. Quality Control/Quality Assurance.			
Is reference toxicant data available?	Yes	Yes	Yes
Was reference toxicant test within acceptable bounds?	Yes	Yes	Yes
What date was reference toxicant test run (MM/DD/YYYY)?	12/03/02	12/10/02	12/17/02
Other (describe)			

E.3. Toxicity Reduction Evaluation . Is the treatment works involved in a Toxicity Reduction Evaluation?

✓ Yes ____ No If yes, describe:

Results from WET testing on 09/06/02 showed presence of toxicity in the effluent that exceeded NPDES permit compliance value. Intermittent toxicity was observed in the subsequent weekly samples. TIE manipulations indicated that toxicants were associated with particulate material and partly organic in nature.

FACILITY NAME AND PERMIT NUMBER:

Honouliuli Regional Wastewater Treatment Plant - Permit No. HI 00208077

Form Approved 1/14/99
OMB Number 2040-0086

	Test number: HO122302	Test number: HO123002	Test number: HO010603
a. Test information.			
Test species & test method number	T. gratilla (draft method)	T. gratilla (draft method)	T. gratilla (draft method)
Age at initiation of test	Not applicable	Not applicable	Not applicable
Outfall number	001	001	001
Dates sample collected	12/22/02 - 12/23/02	12/29/02 - 12/30/02	01/05/03 - 01/06/03
Date test started	12/23/02	12/30/02	01/06/03
Duration	1 hour 20 minutes	1 hour 20 minutes	1 hour 20 minutes
b. Give toxicity test methods followed.			
Manual title	Not applicable	Not applicable	Not applicable
Edition number and year of publication	Not applicable	Not applicable	Not applicable
Page number(s)	Not applicable	Not applicable	Not applicable
c. Give the sample collection method(s) used. For multiple grab samples, indicate the number of grab samples used.			
24-Hour composite	Automatic Flow Composite	Automatic Flow Composite	Automatic Flow Composite
Grab			
d. Indicate where the sample was taken in relation to disinfection. (Check all that apply for each)			
Before disinfection			
After disinfection			
After dechlorination			
e. Describe the point in the treatment process at which the sample was collected.			
Sample was collected:	Downstream from all plant additions	Downstream from all plant additions	Downstream from all plant additions
f. For each test, include whether the test was intended to assess chronic toxicity, acute toxicity, or both.			
Chronic toxicity	✓	✓	✓
Acute toxicity			
g. Provide the type of test performed.			
Static	✓	✓	✓
Static-renewal			
Flow-through			
h. Source of dilution water. If laboratory water, specify type; if receiving water, specify source.			
Laboratory water			
Receiving water	seawater	seawater	seawater
i. Type of dilution water. If salt water, specify "natural" or type of artificial sea salts or brine used.			
Fresh water			
Salt water	natural	natural	natural
j. Give the percentage effluent used for all concentrations in the test series.			
	0.00 0.16	0.00 0.16	0.00 0.16
	0.32 0.63	0.32 0.63	0.32 0.63
	1.26 2.52	1.26 2.52	1.26 2.52

FACILITY NAME AND PERMIT NUMBER:

Honouliuli Regional Wastewater Treatment Plant - Permit No. HI 00208077

Form Approved 1/14/99
OMB Number 2040-0086

	Test number: HO122302	Test number: HO123002	Test number: HO010603
k. Parameters measured during the test. (State whether parameter meets test method specifications)			
pH	Yes	Yes	Yes
Salinity	Yes	Yes	Yes
Temperature	Yes	Yes	Yes
Ammonia	Not measured	Not measured	Not measured
Dissolved oxygen	Yes	Yes	Yes
l. Test Results.			
Acute:			
Percent survival in 100% effluent	%	%	%
LC50	%	%	%
95% C.I.	%	%	%
Control percent survival	%	%	%
Other (describe)			
Chronic:			
NOEC REPRODUCTION	1.26 %	0.63 %	0.32 %
IC25	%	%	%
Control percent survival	%	%	%
Other (describe) NOEC SURVIVAL	%	%	%
m. Quality Control/Quality Assurance.			
Is reference toxicant data available?	Yes	Yes	Yes
Was reference toxicant test within acceptable bounds?	Yes	Yes	Yes
What date was reference toxicant test run (MM/DD/YYYY)?	12/23/02	12/30/02	01/06/03
Other (describe)			

E.3. Toxicity Reduction Evaluation . Is the treatment works involved in a Toxicity Reduction Evaluation?

✓ Yes ____ No If yes, describe:

Results from WET testing on 09/06/02 showed presence of toxicity in the effluent that exceeded NPDES permit compliance value. Intermittent toxicity was observed in the subsequent weekly samples. TIE manipulations indicated that toxicants were associated with particulate material and partly organic in nature.

FACILITY NAME AND PERMIT NUMBER:

Honouliuli Regional Wastewater Treatment Plant - Permit No. HI 00208077

Form Approved 1/14/99
OMB Number 2040-0086

	Test number: HO011603	Test number: HO012303	Test number: HO012803
a. Test information.			
Test species & test method number	T. gratilla (draft method)	T. gratilla (draft method)	T. gratilla (draft method)
Age at initiation of test	Not applicable	Not applicable	Not applicable
Outfall number	001	001	001
Dates sample collected	01/15/03 - 01/16/03	01/22/03 - 01/23/03	01/27/03 - 01/28/03
Date test started	01/16/03	01/23/03	01/28/03
Duration	1 hour 20 minutes	1 hour 20 minutes	1 hour 20 minutes
b. Give toxicity test methods followed.			
Manual title	Not applicable	Not applicable	Not applicable
Edition number and year of publication	Not applicable	Not applicable	Not applicable
Page number(s)	Not applicable	Not applicable	Not applicable
c. Give the sample collection method(s) used. For multiple grab samples, indicate the number of grab samples used.			
24-Hour composite	Automatic Flow Composite	Automatic Flow Composite	Automatic Flow Composite
Grab			
d. Indicate where the sample was taken in relation to disinfection. (Check all that apply for each)			
Before disinfection			
After disinfection			
After dechlorination			
e. Describe the point in the treatment process at which the sample was collected.			
Sample was collected:	Downstream from all plant additions	Downstream from all plant additions	Downstream from all plant additions
f. For each test, include whether the test was intended to assess chronic toxicity, acute toxicity, or both.			
Chronic toxicity	✓	✓	✓
Acute toxicity			
g. Provide the type of test performed.			
Static	✓	✓	✓
Static-renewal			
Flow-through			
h. Source of dilution water. If laboratory water, specify type; if receiving water, specify source.			
Laboratory water			
Receiving water	seawater	seawater	seawater
i. Type of dilution water. If salt water, specify "natural" or type of artificial sea salts or brine used.			
Fresh water			
Salt water	natural	natural	natural
j. Give the percentage effluent used for all concentrations in the test series.			
	0.00 0.16	0.00 0.16	0.00 0.16
	0.32 0.63	0.32 0.63	0.32 0.63
	1.26 2.52	1.26 2.52	1.26 2.52

FACILITY NAME AND PERMIT NUMBER:

Honouliuli Regional Wastewater Treatment Plant - Permit No. HI 00208077

Form Approved 1/14/99
OMB Number 2040-0086

	Test number: HO011603	Test number: HO012303	Test number: HO012803
k. Parameters measured during the test. (State whether parameter meets test method specifications)			
pH	Yes	Yes	Yes
Salinity	Yes	Yes	Yes
Temperature	Yes	Yes	Yes
Ammonia	Not measured	Not measured	Not measured
Dissolved oxygen	Yes	Yes	Yes
l. Test Results.			
Acute:			
Percent survival in 100% effluent	%	%	%
LC50	%	%	%
95% C.I.	%	%	%
Control percent survival	%	%	%
Other (describe)			
Chronic:			
NOEC REPRODUCTION	0.63 %	0.16 %	0.63 %
IC25	%	%	%
Control percent survival	%	%	%
Other (describe) NOEC SURVIVAL	%	%	%
m. Quality Control/Quality Assurance.			
Is reference toxicant data available?	Yes	Yes	Yes
Was reference toxicant test within acceptable bounds?	Yes	Yes	Yes
What date was reference toxicant test run (MM/DD/YYYY)?	01/16/03	01/23/03	01/28/03
Other (describe)			

E.3. Toxicity Reduction Evaluation . Is the treatment works involved in a Toxicity Reduction Evaluation?

✓ Yes ____ No If yes, describe:

Results from WET testing on 09/06/02 showed presence of toxicity in the effluent that exceeded NPDES permit compliance value. Intermittent toxicity was observed in the subsequent weekly samples. TIE manipulations indicated that toxicants were associated with particulate material and partly organic in nature.

FACILITY NAME AND PERMIT NUMBER:

Honouliuli Regional Wastewater Treatment Plant - Permit No. HI 00208077

Form Approved 1/14/99
OMB Number 2040-0086

	Test number: HO020303	Test number: HO021003	Test number: HO022103
a. Test information.			
Test species & test method number	T. gratilla (draft method)	T. gratilla (draft method)	T. gratilla (draft method)
Age at initiation of test	Not applicable	Not applicable	Not applicable
Outfall number	001	001	001
Dates sample collected	02/02/03 - 02/03/03	02/09/03 -02/10/03	02/20/03 -02/21/03
Date test started	02/03/03	02/10/03	02/21/03
Duration	1 hour 20 minutes	1 hour 20 minutes	1 hour 20 minutes
b. Give toxicity test methods followed.			
Manual title	Not applicable	Not applicable	Not applicable
Edition number and year of publication	Not applicable	Not applicable	Not applicable
Page number(s)	Not applicable	Not applicable	Not applicable
c. Give the sample collection method(s) used. For multiple grab samples, indicate the number of grab samples used.			
24-Hour composite	Automatic Flow Composite	Automatic Flow Composite	Automatic Flow Composite
Grab			
d. Indicate where the sample was taken in relation to disinfection. (Check all that apply for each)			
Before disinfection			
After disinfection			
After dechlorination			
e. Describe the point in the treatment process at which the sample was collected.			
Sample was collected:	Downstream from all plant additions	Downstream from all plant additions	Downstream from all plant additions
f. For each test, include whether the test was intended to assess chronic toxicity, acute toxicity, or both.			
Chronic toxicity	✓	✓	✓
Acute toxicity			
g. Provide the type of test performed.			
Static	✓	✓	✓
Static-renewal			
Flow-through			
h. Source of dilution water. If laboratory water, specify type; if receiving water, specify source.			
Laboratory water			
Receiving water	seawater	seawater	seawater
i. Type of dilution water. If salt water, specify "natural" or type of artificial sea salts or brine used.			
Fresh water			
Salt water	natural	natural	natural
j. Give the percentage effluent used for all concentrations in the test series.			
	0.00 0.16	0.00 0.16	0.00 0.16
	0.32 0.63	0.32 0.63	0.32 0.63
	1.26 2.52	1.26 2.52	1.26 2.52

FACILITY NAME AND PERMIT NUMBER:

Honouliuli Regional Wastewater Treatment Plant - Permit No. HI 00208077

Form Approved 1/14/99
OMB Number 2040-0086

	Test number: HO020303	Test number: HO021003	Test number: HO022103
k. Parameters measured during the test. (State whether parameter meets test method specifications)			
pH	Yes	Yes	Yes
Salinity	Yes	Yes	Yes
Temperature	Yes	Yes	Yes
Ammonia	Not measured	Not measured	Not measured
Dissolved oxygen	Yes	Yes	Yes
l. Test Results.			
Acute:			
Percent survival in 100% effluent	%	%	%
LC50	%	%	%
95% C.I.	%	%	%
Control percent survival	%	%	%
Other (describe)			
Chronic:			
NOEC REPRODUCTION	0.63 %	0.16 %	0.63 %
IC25	%	%	%
Control percent survival	%	%	%
Other (describe) NOEC SURVIVAL	%	%	%
m. Quality Control/Quality Assurance.			
Is reference toxicant data available?	Yes	Yes	Yes
Was reference toxicant test within acceptable bounds?	Yes	Yes	Yes
What date was reference toxicant test run (MM/DD/YYYY)?	02/03/03	02/10/03	02/21/03
Other (describe)			

E.3. Toxicity Reduction Evaluation . Is the treatment works involved in a Toxicity Reduction Evaluation?

✓ Yes ____ No If yes, describe:

Results from WET testing on 09/06/02 showed presence of toxicity in the effluent that exceeded NPDES permit compliance value. Intermittent toxicity was observed in the subsequent weekly samples. TIE manipulations indicated that toxicants were associated with particulate material and partly organic in nature.

FACILITY NAME AND PERMIT NUMBER:

Honouliuli Regional Wastewater Treatment Plant - Permit No. HI 00208077

Form Approved 1/14/99
OMB Number 2040-0086

	Test number: HO022503	Test number: HO030303	Test number: HO031203
a. Test information.			
Test species & test method number	T. gratilla (draft method)	T. gratilla (draft method)	T. gratilla (draft method)
Age at initiation of test	Not applicable	Not applicable	Not applicable
Outfall number	001	001	001
Dates sample collected	02/24/03 - 02/25/03	03/02/03 - 03/03/03	03/11/03 - 03/12/03
Date test started	02/25/03	03/03/03	03/12/03
Duration	1 hour 20 minutes	1 hour 20 minutes	1 hour 20 minutes
b. Give toxicity test methods followed.			
Manual title	Not applicable	Not applicable	Not applicable
Edition number and year of publication	Not applicable	Not applicable	Not applicable
Page number(s)	Not applicable	Not applicable	Not applicable
c. Give the sample collection method(s) used. For multiple grab samples, indicate the number of grab samples used.			
24-Hour composite	Automatic Flow Composite	Automatic Flow Composite	Automatic Flow Composite
Grab			
d. Indicate where the sample was taken in relation to disinfection. (Check all that apply for each)			
Before disinfection			
After disinfection			
After dechlorination			
e. Describe the point in the treatment process at which the sample was collected.			
Sample was collected:	Downstream from all plant additions	Downstream from all plant additions	Downstream from all plant additions
f. For each test, include whether the test was intended to assess chronic toxicity, acute toxicity, or both.			
Chronic toxicity	✓	✓	✓
Acute toxicity			
g. Provide the type of test performed.			
Static	✓	✓	✓
Static-renewal			
Flow-through			
h. Source of dilution water. If laboratory water, specify type; if receiving water, specify source.			
Laboratory water			
Receiving water	seawater	seawater	seawater
i. Type of dilution water. If salt water, specify "natural" or type of artificial sea salts or brine used.			
Fresh water			
Salt water	natural	natural	natural
j. Give the percentage effluent used for all concentrations in the test series.			
	0.00 0.16	0.00 0.16	0.00 0.16
	0.32 0.63	0.32 0.63	0.32 0.63
	1.26 2.52	1.26 2.52	1.26 2.52

FACILITY NAME AND PERMIT NUMBER:

Honouliuli Regional Wastewater Treatment Plant - Permit No. HI 00208077

Form Approved 1/14/99
OMB Number 2040-0086

	Test number: HO022503	Test number: HO030303	Test number: HO031203
k. Parameters measured during the test. (State whether parameter meets test method specifications)			
pH	Yes	Yes	Yes
Salinity	Yes	Yes	Yes
Temperature	Yes	Yes	Yes
Ammonia	Not measured	Not measured	Not measured
Dissolved oxygen	Yes	Yes	Yes
l. Test Results.			
Acute:			
Percent survival in 100% effluent	%	%	%
LC50	%	%	%
95% C.I.	%	%	%
Control percent survival	%	%	%
Other (describe)			
Chronic:			
NOEC REPRODUCTION	0.16 %	0.32 %	1.26 %
IC25	%	%	%
Control percent survival	%	%	%
Other (describe) NOEC SURVIVAL	%	%	%
m. Quality Control/Quality Assurance.			
Is reference toxicant data available?	Yes	Yes	Yes
Was reference toxicant test within acceptable bounds?	Yes	Yes	Yes
What date was reference toxicant test run (MM/DD/YYYY)?	02/25/03	03/03/03	03/12/03
Other (describe)			

E.3. Toxicity Reduction Evaluation. Is the treatment works involved in a Toxicity Reduction Evaluation?

✓ Yes ____ No If yes, describe:

Results from WET testing on 09/06/02 showed presence of toxicity in the effluent that exceeded NPDES permit compliance value. Intermittent toxicity was observed in the subsequent weekly samples. TIE manipulations indicated that toxicants were associated with particulate material and partly organic in nature.

FACILITY NAME AND PERMIT NUMBER:

Honouliuli Regional Wastewater Treatment Plant - Permit No. HI 00208077

Form Approved 1/14/99
OMB Number 2040-0086

	Test number: HO031803	Test number: HO032703	Test number: HO033103
a. Test information.			
Test species & test method number	T. gratilla (draft method)	T. gratilla (draft method)	T. gratilla (draft method)
Age at initiation of test	Not applicable	Not applicable	Not applicable
Outfall number	001	001	001
Dates sample collected	03/17/03 - 03/18/03	03/26/03 - 03/27/03	03/30/03 - 03/31/03
Date test started	03/18/03	03/27/03	03/31/03
Duration	1 hour 20 minutes	1 hour 20 minutes	1 hour 20 minutes
b. Give toxicity test methods followed.			
Manual title	Not applicable	Not applicable	Not applicable
Edition number and year of publication	Not applicable	Not applicable	Not applicable
Page number(s)	Not applicable	Not applicable	Not applicable
c. Give the sample collection method(s) used. For multiple grab samples, indicate the number of grab samples used.			
24-Hour composite	Automatic Flow Composite	Automatic Flow Composite	Automatic Flow Composite
Grab			
d. Indicate where the sample was taken in relation to disinfection. (Check all that apply for each)			
Before disinfection			
After disinfection			
After dechlorination			
e. Describe the point in the treatment process at which the sample was collected.			
Sample was collected:	Downstream from all plant additions	Downstream from all plant additions	Downstream from all plant additions
f. For each test, include whether the test was intended to assess chronic toxicity, acute toxicity, or both.			
Chronic toxicity	✓	✓	✓
Acute toxicity			
g. Provide the type of test performed.			
Static	✓	✓	✓
Static-renewal			
Flow-through			
h. Source of dilution water. If laboratory water, specify type; if receiving water, specify source.			
Laboratory water			
Receiving water	seawater	seawater	seawater
i. Type of dilution water. If salt water, specify "natural" or type of artificial sea salts or brine used.			
Fresh water			
Salt water	natural	natural	natural
j. Give the percentage effluent used for all concentrations in the test series.			
	0.00 0.16	0.00 0.16	0.00 0.16
	0.32 0.63	0.32 0.63	0.32 0.63
	1.26 2.52	1.26 2.52	1.26 2.52

FACILITY NAME AND PERMIT NUMBER:

Honouliuli Regional Wastewater Treatment Plant - Permit No. HI 00208077

Form Approved 1/14/99
OMB Number 2040-0086

	Test number: HO031803	Test number: HO032703	Test number: HO033103
k. Parameters measured during the test. (State whether parameter meets test method specifications)			
pH	Yes	Yes	Yes
Salinity	Yes	Yes	Yes
Temperature	Yes	Yes	Yes
Ammonia	Not measured	Not measured	Not measured
Dissolved oxygen	Yes	Yes	Yes
l. Test Results.			
Acute:			
Percent survival in 100% effluent	%	%	%
LC50	%	%	%
95% C.I.	%	%	%
Control percent survival	%	%	%
Other (describe)			
Chronic:			
NOEC REPRODUCTION	1.26 %	0.63 %	0.63 %
IC25	%	%	%
Control percent survival	%	%	%
Other (describe) NOEC SURVIVAL	%	%	%
m. Quality Control/Quality Assurance.			
Is reference toxicant data available?	Yes	Yes	Yes
Was reference toxicant test within acceptable bounds?	Yes	Yes	Yes
What date was reference toxicant test run (MM/DD/YYYY)?	03/18/03	03/27/03	03/31/03
Other (describe)			

E.3. Toxicity Reduction Evaluation . Is the treatment works involved in a Toxicity Reduction Evaluation?

✓ Yes ____ No If yes, describe:

Results from WET testing on 09/06/02 showed presence of toxicity in the effluent that exceeded NPDES permit compliance value. Intermittent toxicity was observed in the subsequent weekly samples. TIE manipulations indicated that toxicants were associated with particulate material and partly organic in nature.

FACILITY NAME AND PERMIT NUMBER:

Honouliuli Regional Wastewater Treatment Plant - Permit No. HI 00208077

Form Approved 1/14/99
OMB Number 2040-0086

	Test number: HO040703	Test number: HO041603	Test number: HO042503
a. Test information.			
Test species & test method number	T. gratilla (draft method)	T. gratilla (draft method)	T. gratilla (draft method)
Age at initiation of test	Not applicable	Not applicable	Not applicable
Outfall number	001	001	001
Dates sample collected	04/06/06 - 04/07/03	04/15/03 - 04/16/03	04/24/03 - 04/25/03
Date test started	04/07/03	04/16/03	04/25/03
Duration	1 hour 20 minutes	1 hour 20 minutes	1 hour 20 minutes
b. Give toxicity test methods followed.			
Manual title	Not applicable	Not applicable	Not applicable
Edition number and year of publication	Not applicable	Not applicable	Not applicable
Page number(s)	Not applicable	Not applicable	Not applicable
c. Give the sample collection method(s) used. For multiple grab samples, indicate the number of grab samples used.			
24-Hour composite	Automatic Flow Composite	Automatic Flow Composite	Automatic Flow Composite
Grab			
d. Indicate where the sample was taken in relation to disinfection. (Check all that apply for each)			
Before disinfection			
After disinfection			
After dechlorination			
e. Describe the point in the treatment process at which the sample was collected.			
Sample was collected:	Downstream from all plant additions	Downstream from all plant additions	Downstream from all plant additions
f. For each test, include whether the test was intended to assess chronic toxicity, acute toxicity, or both.			
Chronic toxicity	✓	✓	✓
Acute toxicity			
g. Provide the type of test performed.			
Static	✓	✓	✓
Static-renewal			
Flow-through			
h. Source of dilution water. If laboratory water, specify type; if receiving water, specify source.			
Laboratory water			
Receiving water	seawater	seawater	seawater
i. Type of dilution water. If salt water, specify "natural" or type of artificial sea salts or brine used.			
Fresh water			
Salt water	natural	natural	natural
j. Give the percentage effluent used for all concentrations in the test series.			
	0.00 0.16	0.00 0.16	0.00 0.16
	0.32 0.63	0.32 0.63	0.32 0.63
	1.26 2.52	1.26 2.52	1.26 2.52

FACILITY NAME AND PERMIT NUMBER:

Honouliuli Regional Wastewater Treatment Plant - Permit No. HI 00208077

Form Approved 1/14/99
OMB Number 2040-0086

	Test number: HO040703	Test number: HO041603	Test number: HO042503
k. Parameters measured during the test. (State whether parameter meets test method specifications)			
pH	Yes	Yes	Yes
Salinity	Yes	Yes	Yes
Temperature	Yes	Yes	Yes
Ammonia	Not measured	Not measured	Not measured
Dissolved oxygen	Yes	Yes	Yes
l. Test Results.			
Acute:			
Percent survival in 100% effluent	%	%	%
LC50	%	%	%
95% C.I.	%	%	%
Control percent survival	%	%	%
Other (describe)			
Chronic:			
NOEC REPRODUCTION	0.63 %	<0.16 %	1.26 %
IC25	%	%	%
Control percent survival	%	%	%
Other (describe) NOEC SURVIVAL	%	%	%
m. Quality Control/Quality Assurance.			
Is reference toxicant data available?	Yes	Yes	Yes
Was reference toxicant test within acceptable bounds?	Yes	Yes	Yes
What date was reference toxicant test run (MM/DD/YYYY)?	04/07/03	04/16/03	04/25/03
Other (describe)			

E.3. Toxicity Reduction Evaluation . Is the treatment works involved in a Toxicity Reduction Evaluation?

✓ Yes ____ No If yes, describe:

Results from WET testing on 09/06/02 showed presence of toxicity in the effluent that exceeded NPDES permit compliance value. Intermittent toxicity was observed in the subsequent weekly samples. TIE manipulations indicated that toxicants were associated with particulate material and partly organic in nature.

FACILITY NAME AND PERMIT NUMBER:

Honouliuli Regional Wastewater Treatment Plant - Permit No. HI 00208077

Form Approved 1/14/99
OMB Number 2040-0086

	Test number: HO050203	Test number: HO051003	Test number: HO051303
a. Test information.			
Test species & test method number	T. gratilla (draft method)	T. gratilla (draft method)	T. gratilla (draft method)
Age at initiation of test	Not applicable	Not applicable	Not applicable
Outfall number	001	001	001
Dates sample collected	05/01/03 - 05/02/03	05/09/03 - 05/10/03	05/12/03 - 05/13/03
Date test started	05/02/03	05/10/03	05/13/03
Duration	1 hour 20 minutes	1 hour 20 minutes	1 hour 20 minutes
b. Give toxicity test methods followed.			
Manual title	Not applicable	Not applicable	Not applicable
Edition number and year of publication	Not applicable	Not applicable	Not applicable
Page number(s)	Not applicable	Not applicable	Not applicable
c. Give the sample collection method(s) used. For multiple grab samples, indicate the number of grab samples used.			
24-Hour composite	Automatic Flow Composite	Automatic Flow Composite	Automatic Flow Composite
Grab			
d. Indicate where the sample was taken in relation to disinfection. (Check all that apply for each)			
Before disinfection			
After disinfection			
After dechlorination			
e. Describe the point in the treatment process at which the sample was collected.			
Sample was collected:	Downstream from all plant additions	Downstream from all plant additions	Downstream from all plant additions
f. For each test, include whether the test was intended to assess chronic toxicity, acute toxicity, or both.			
Chronic toxicity	✓	✓	✓
Acute toxicity			
g. Provide the type of test performed.			
Static	✓	✓	✓
Static-renewal			
Flow-through			
h. Source of dilution water. If laboratory water, specify type; if receiving water, specify source.			
Laboratory water			
Receiving water	seawater	seawater	seawater
i. Type of dilution water. If salt water, specify "natural" or type of artificial sea salts or brine used.			
Fresh water			
Salt water	natural	natural	natural
j. Give the percentage effluent used for all concentrations in the test series.			
	0.00 0.16	0.00 0.16	0.00 0.16
	0.32 0.63	0.32 0.63	0.32 0.63
	1.26 2.52	1.26 2.52	1.26 2.52

FACILITY NAME AND PERMIT NUMBER:

Honouliuli Regional Wastewater Treatment Plant - Permit No. HI 00208077

Form Approved 1/14/99
OMB Number 2040-0086

	Test number: HO050203	Test number: HO051003	Test number: HO051303
k. Parameters measured during the test. (State whether parameter meets test method specifications)			
pH	Yes	Yes	Yes
Salinity	Yes	Yes	Yes
Temperature	Yes	Yes	Yes
Ammonia	Not measured	Not measured	Not measured
Dissolved oxygen	Yes	Yes	Yes
l. Test Results.			
Acute:			
Percent survival in 100% effluent	%	%	%
LC50	%	%	%
95% C.I.	%	%	%
Control percent survival	%	%	%
Other (describe)			
Chronic:			
NOEC REPRODUCTION	<0.16 %	<0.16 %	1.26 %
IC25	%	%	%
Control percent survival	%	%	%
Other (describe) NOEC SURVIVAL	%	%	%
m. Quality Control/Quality Assurance.			
Is reference toxicant data available?	Yes	Yes	Yes
Was reference toxicant test within acceptable bounds?	Yes	Yes	Yes
What date was reference toxicant test run (MM/DD/YYYY)?	05/02/03	05/10/03	05/13/03
Other (describe)			

E.3. Toxicity Reduction Evaluation. Is the treatment works involved in a Toxicity Reduction Evaluation?

✓ Yes ____ No If yes, describe:

Results from WET testing on 09/06/02 showed presence of toxicity in the effluent that exceeded NPDES permit compliance value. Intermittent toxicity was observed in the subsequent weekly samples. TIE manipulations indicated that toxicants were associated with particulate material and partly organic in nature.

FACILITY NAME AND PERMIT NUMBER:

Honouliuli Regional Wastewater Treatment Plant - Permit No. HI 00208077

Form Approved 1/14/99
OMB Number 2040-0086

	Test number: HO052103	Test number: HO052803	Test number: HO060603
a. Test information.			
Test species & test method number	T. gratilla (draft method)	T. gratilla (draft method)	T. gratilla (draft method)
Age at initiation of test	Not applicable	Not applicable	Not applicable
Outfall number	001	001	001
Dates sample collected	05/20/03 - 05/21/03	05/27/03 - 05/28/03	06/05/03 - 06/06/03
Date test started	05/21/03	05/28/03	06/06/03
Duration	1 hour 20 minutes	1 hour 20 minutes	1 hour 20 minutes
b. Give toxicity test methods followed.			
Manual title	Not applicable	Not applicable	Not applicable
Edition number and year of publication	Not applicable	Not applicable	Not applicable
Page number(s)	Not applicable	Not applicable	Not applicable
c. Give the sample collection method(s) used. For multiple grab samples, indicate the number of grab samples used.			
24-Hour composite	Automatic Flow Composite	Automatic Flow Composite	Automatic Flow Composite
Grab			
d. Indicate where the sample was taken in relation to disinfection. (Check all that apply for each)			
Before disinfection			
After disinfection			
After dechlorination			
e. Describe the point in the treatment process at which the sample was collected.			
Sample was collected:	Downstream from all plant additions	Downstream from all plant additions	Downstream from all plant additions
f. For each test, include whether the test was intended to assess chronic toxicity, acute toxicity, or both.			
Chronic toxicity	✓	✓	✓
Acute toxicity			
g. Provide the type of test performed.			
Static	✓	✓	✓
Static-renewal			
Flow-through			
h. Source of dilution water. If laboratory water, specify type; if receiving water, specify source.			
Laboratory water			
Receiving water	seawater	seawater	seawater
i. Type of dilution water. If salt water, specify "natural" or type of artificial sea salts or brine used.			
Fresh water			
Salt water	natural	natural	natural
j. Give the percentage effluent used for all concentrations in the test series.			
	0.00 0.16	0.00 0.16	0.00 0.16
	0.32 0.63	0.32 0.63	0.32 0.63
	1.26 2.52	1.26 2.52	1.26 2.52

FACILITY NAME AND PERMIT NUMBER:

Honouliuli Regional Wastewater Treatment Plant - Permit No. HI 00208077

Form Approved 1/14/99
OMB Number 2040-0086

	Test number: HO052103	Test number: HO052803	Test number: HO060603
k. Parameters measured during the test. (State whether parameter meets test method specifications)			
pH	Yes	Yes	Yes
Salinity	Yes	Yes	Yes
Temperature	Yes	Yes	Yes
Ammonia	Not measured	Not measured	Not measured
Dissolved oxygen	Yes	Yes	Yes
l. Test Results.			
Acute:			
Percent survival in 100% effluent	%	%	%
LC50	%	%	%
95% C.I.	%	%	%
Control percent survival	%	%	%
Other (describe)			
Chronic:			
NOEC REPRODUCTION	<0.16 %	<0.16 %	0.32 %
IC25	%	%	%
Control percent survival	%	%	%
Other (describe) NOEC SURVIVAL	%	%	%
m. Quality Control/Quality Assurance.			
Is reference toxicant data available?	Yes	Yes	Yes
Was reference toxicant test within acceptable bounds?	Yes	Yes	Yes
What date was reference toxicant test run (MM/DD/YYYY)?	05/21/03	05/28/03	06/06/03
Other (describe)			

E.3. Toxicity Reduction Evaluation. Is the treatment works involved in a Toxicity Reduction Evaluation?

✓ Yes ____ No If yes, describe:

Results from WET testing on 09/06/02 showed presence of toxicity in the effluent that exceeded NPDES permit compliance value. Intermittent toxicity was observed in the subsequent weekly samples. TIE manipulations indicated that toxicants were associated with particulate material and partly organic in nature.

FACILITY NAME AND PERMIT NUMBER:

Honouliuli Regional Wastewater Treatment Plant - Permit No. HI 00208077

Form Approved 1/14/99
OMB Number 2040-0086

	Test number: HO061003	Test number: HO061603	Test number: HO062203
a. Test information.			
Test species & test method number	T. gratilla (draft method)	T. gratilla (draft method)	T. gratilla (draft method)
Age at initiation of test	Not applicable	Not applicable	Not applicable
Outfall number	001	001	001
Dates sample collected	06/09/03 - 06/10/03	06/15/03 - 06/16/03	06/21/03 - 16/22/03
Date test started	06/10/03	06/16/03	06/22/03
Duration	1 hour 20 minutes	1 hour 20 minutes	1 hour 20 minutes
b. Give toxicity test methods followed.			
Manual title	Not applicable	Not applicable	Not applicable
Edition number and year of publication	Not applicable	Not applicable	Not applicable
Page number(s)	Not applicable	Not applicable	Not applicable
c. Give the sample collection method(s) used. For multiple grab samples, indicate the number of grab samples used.			
24-Hour composite	Automatic Flow Composite	Automatic Flow Composite	Automatic Flow Composite
Grab			
d. Indicate where the sample was taken in relation to disinfection. (Check all that apply for each)			
Before disinfection			
After disinfection			
After dechlorination			
e. Describe the point in the treatment process at which the sample was collected.			
Sample was collected:	Downstream from all plant additions	Downstream from all plant additions	Downstream from all plant additions
f. For each test, include whether the test was intended to assess chronic toxicity, acute toxicity, or both.			
Chronic toxicity	✓	✓	✓
Acute toxicity			
g. Provide the type of test performed.			
Static	✓	✓	✓
Static-renewal			
Flow-through			
h. Source of dilution water. If laboratory water, specify type; if receiving water, specify source.			
Laboratory water			
Receiving water	seawater	seawater	seawater
i. Type of dilution water. If salt water, specify "natural" or type of artificial sea salts or brine used.			
Fresh water			
Salt water	natural	natural	natural
j. Give the percentage effluent used for all concentrations in the test series.			
	0.00 0.16	0.00 0.16	0.00 0.16
	0.32 0.63	0.32 0.63	0.32 0.63
	1.26 2.52	1.26 2.52	1.26 2.52

FACILITY NAME AND PERMIT NUMBER:

Honouliuli Regional Wastewater Treatment Plant - Permit No. HI 00208077

Form Approved 1/14/99
OMB Number 2040-0086

	Test number: HO061003	Test number: HO061603	Test number: HO062203
k. Parameters measured during the test. (State whether parameter meets test method specifications)			
pH	Yes	Yes	Yes
Salinity	Yes	Yes	Yes
Temperature	Yes	Yes	Yes
Ammonia	Not measured	Not measured	Not measured
Dissolved oxygen	Yes	Yes	Yes
l. Test Results.			
Acute:			
Percent survival in 100% effluent	%	%	%
LC50	%	%	%
95% C.I.	%	%	%
Control percent survival	%	%	%
Other (describe)			
Chronic:			
NOEC REPRODUCTION	<0.16 %	0.63 %	0.16 %
IC25	%	%	%
Control percent survival	%	%	%
Other (describe) NOEC SURVIVAL	%	%	%
m. Quality Control/Quality Assurance.			
Is reference toxicant data available?	Yes	Yes	Yes
Was reference toxicant test within acceptable bounds?	Yes	Yes	Yes
What date was reference toxicant test run (MM/DD/YYYY)?	06/10/03	06/16/03	06/22/03
Other (describe)			

E.3. Toxicity Reduction Evaluation. Is the treatment works involved in a Toxicity Reduction Evaluation?

✓ Yes ___ No If yes, describe:

Results from WET testing on 09/06/02 showed presence of toxicity in the effluent that exceeded NPDES permit compliance value. Intermittent toxicity was observed in the subsequent weekly samples. TIE manipulations indicated that toxicants were associated with particulate material and partly organic in nature.

FACILITY NAME AND PERMIT NUMBER:

Honouliuli Regional Wastewater Treatment Plant - Permit No. HI 00208077

Form Approved 1/14/99
OMB Number 2040-0086

	Test number: HO070403	Test number: HO071003	Test number: HO071603
a. Test information.			
Test species & test method number	T. gratilla (draft method)	T. gratilla (draft method)	T. gratilla (draft method)
Age at initiation of test	Not applicable	Not applicable	Not applicable
Outfall number	001	001	001
Dates sample collected	07/03/03 - 07/04/03	07/09/03 - 07/04/03	07/15/03 - 07/16/03
Date test started	07/04/03	07/10/03	07/16/03
Duration	1 hour 20 minutes	1 hour 20 minutes	1 hour 20 minutes
b. Give toxicity test methods followed.			
Manual title	Not applicable	Not applicable	Not applicable
Edition number and year of publication	Not applicable	Not applicable	Not applicable
Page number(s)	Not applicable	Not applicable	Not applicable
c. Give the sample collection method(s) used. For multiple grab samples, indicate the number of grab samples used.			
24-Hour composite	Automatic Flow Composite	Automatic Flow Composite	Automatic Flow Composite
Grab			
d. Indicate where the sample was taken in relation to disinfection. (Check all that apply for each)			
Before disinfection			
After disinfection			
After dechlorination			
e. Describe the point in the treatment process at which the sample was collected.			
Sample was collected:	Downstream from all plant additions	Downstream from all plant additions	Downstream from all plant additions
f. For each test, include whether the test was intended to assess chronic toxicity, acute toxicity, or both.			
Chronic toxicity	✓	✓	✓
Acute toxicity			
g. Provide the type of test performed.			
Static	✓	✓	✓
Static-renewal			
Flow-through			
h. Source of dilution water. If laboratory water, specify type; if receiving water, specify source.			
Laboratory water			
Receiving water	seawater	seawater	seawater
i. Type of dilution water. If salt water, specify "natural" or type of artificial sea salts or brine used.			
Fresh water			
Salt water	natural	natural	natural
j. Give the percentage effluent used for all concentrations in the test series.			
	0.00 0.16	0.00 0.16	0.00 0.16
	0.32 0.63	0.32 0.63	0.32 0.63
	1.26 2.52	1.26 2.52	1.26 2.52

FACILITY NAME AND PERMIT NUMBER:

Honouliuli Regional Wastewater Treatment Plant - Permit No. HI 00208077

Form Approved 1/14/99
OMB Number 2040-0086

	Test number: HO070403	Test number: HO071003	Test number: HO071603
k. Parameters measured during the test. (State whether parameter meets test method specifications)			
pH	Yes	Yes	Yes
Salinity	Yes	Yes	Yes
Temperature	Yes	Yes	Yes
Ammonia	Not measured	Not measured	Not measured
Dissolved oxygen	Yes	Yes	Yes
l. Test Results.			
Acute:			
Percent survival in 100% effluent	%	%	%
LC50	%	%	%
95% C.I.	%	%	%
Control percent survival	%	%	%
Other (describe)			
Chronic:			
NOEC REPRODUCTION	0.63 %	1.26 %	2.52 %
IC25	%	%	%
Control percent survival	%	%	%
Other (describe) NOEC SURVIVAL	%	%	%
m. Quality Control/Quality Assurance.			
Is reference toxicant data available?	Yes	Yes	Yes
Was reference toxicant test within acceptable bounds?	Yes	Yes	Yes
What date was reference toxicant test run (MM/DD/YYYY)?	07/04/03	07/10/03	07/16/03
Other (describe)			

E.3. Toxicity Reduction Evaluation . Is the treatment works involved in a Toxicity Reduction Evaluation?

✔ Yes ____ No If yes, describe:

Results from WET testing on 09/06/02 showed presence of toxicity in the effluent that exceeded NPDES permit compliance value. Intermittent toxicity was observed in the subsequent weekly samples. However, samples collected from 07/03/03 to 08/03/03 for accelerated testing were not toxic to *T. gratilla* gametes. Monthly monitoring was subsequently resumed.

FACILITY NAME AND PERMIT NUMBER:

Honouliuli Regional Wastewater Treatment Plant - Permit No. HI 00208077

Form Approved 1/14/99
OMB Number 2040-0086

	Test number: HO072203	Test number: HO072803	Test number: HO080303
a. Test information.			
Test species & test method number	T. gratilla (draft method)	T. gratilla (draft method)	T. gratilla (draft method)
Age at initiation of test	Not applicable	Not applicable	Not applicable
Outfall number	001	001	001
Dates sample collected	07/21/03 - 07/22/03	07/27/03 - 07/28/03	08/02/03 - 08/03/03
Date test started	07/22/03	07/28/03	08/03/03
Duration	1 hour 20 minutes	1 hour 20 minutes	1 hour 20 minutes
b. Give toxicity test methods followed.			
Manual title	Not applicable	Not applicable	Not applicable
Edition number and year of publication	Not applicable	Not applicable	Not applicable
Page number(s)	Not applicable	Not applicable	Not applicable
c. Give the sample collection method(s) used. For multiple grab samples, indicate the number of grab samples used.			
24-Hour composite	Automatic Flow Composite	Automatic Flow Composite	Automatic Flow Composite
Grab			
d. Indicate where the sample was taken in relation to disinfection. (Check all that apply for each)			
Before disinfection			
After disinfection			
After dechlorination			
e. Describe the point in the treatment process at which the sample was collected.			
Sample was collected:	Downstream from all plant additions	Downstream from all plant additions	Downstream from all plant additions
f. For each test, include whether the test was intended to assess chronic toxicity, acute toxicity, or both.			
Chronic toxicity	✓	✓	✓
Acute toxicity			
g. Provide the type of test performed.			
Static	✓	✓	✓
Static-renewal			
Flow-through			
h. Source of dilution water. If laboratory water, specify type; if receiving water, specify source.			
Laboratory water			
Receiving water	seawater	seawater	seawater
i. Type of dilution water. It salt water, specify "natural" or type of artificial sea salts or brine used.			
Fresh water			
Salt water	natural	natural	natural
j. Give the percentage effluent used for all concentrations in the test series.			
	0.00 0.16	0.00 0.16	0.00 0.16
	0.32 0.63	0.32 0.63	0.32 0.63
	1.26 2.52	1.26 2.52	1.26 2.52

FACILITY NAME AND PERMIT NUMBER:

Honouliuli Regional Wastewater Treatment Plant - Permit No. HI 00208077

Form Approved 1/14/99
OMB Number 2040-0086

	Test number: HO072203	Test number: HO072803	Test number: HO080303
k. Parameters measured during the test. (State whether parameter meets test method specifications)			
pH	Yes	Yes	Yes
Salinity	Yes	Yes	Yes
Temperature	Yes	Yes	Yes
Ammonia	Not measured	Not measured	Not measured
Dissolved oxygen	Yes	Yes	Yes
l. Test Results.			
Acute:			
Percent survival in 100% effluent	%	%	%
LC50	%	%	%
95% C.I.	%	%	%
Control percent survival	%	%	%
Other (describe)			
Chronic:			
NOEC REPRODUCTION	0.63 %	1.26 %	0.63 %
IC25	%	%	%
Control percent survival	%	%	%
Other (describe) NOEC SURVIVAL	%	%	%
m. Quality Control/Quality Assurance.			
Is reference toxicant data available?	Yes	Yes	Yes
Was reference toxicant test within acceptable bounds?	Yes	Yes	Yes
What date was reference toxicant test run (MM/DD/YYYY)?	07/22/03	07/28/03	08/03/03
Other (describe)			

E.3. Toxicity Reduction Evaluation . Is the treatment works involved in a Toxicity Reduction Evaluation?

✔ Yes ____ No If yes, describe:
Results from WET testing on 09/06/02 showed presence of toxicity in the effluent that exceeded NPDES permit compliance value. Intermittent toxicity was observed in the subsequent weekly samples. However, samples collected from 07/03/03 to 08/03/03 for accelerated testing were not toxic to *T. gratilla* gametes. Monthly monitoring was subsequently resumed.

FACILITY NAME AND PERMIT NUMBER:

Honouliuli Regional Wastewater Treatment Plant - Permit No. HI 00208077

Form Approved 1/14/99
OMB Number 2040-0086

	Test number: HO090503	Test number: HO100203	Test number: HO110303
a. Test information.			
Test species & test method number	T. gratilla (draft method)	T. gratilla (draft method)	T. gratilla (draft method)
Age at initiation of test	Not applicable	Not applicable	Not applicable
Outfall number	001	001	001
Dates sample collected	09/04/03 - 09/05/03	10/01/03 - 10/02/03	11/02/03 - 11/03/03
Date test started	09/05/03	10/02/03	11/03/03
Duration	1 hour 20 minutes	1 hour 20 minutes	1 hour 20 minutes
b. Give toxicity test methods followed.			
Manual title	Not applicable	Not applicable	Not applicable
Edition number and year of publication	Not applicable	Not applicable	Not applicable
Page number(s)	Not applicable	Not applicable	Not applicable
c. Give the sample collection method(s) used. For multiple grab samples, indicate the number of grab samples used.			
24-Hour composite	Automatic Flow Composite	Automatic Flow Composite	Automatic Flow Composite
Grab			
d. Indicate where the sample was taken in relation to disinfection. (Check all that apply for each)			
Before disinfection			
After disinfection			
After dechlorination			
e. Describe the point in the treatment process at which the sample was collected.			
Sample was collected:	Downstream from all plant additions	Downstream from all plant additions	Downstream from all plant additions
f. For each test, include whether the test was intended to assess chronic toxicity, acute toxicity, or both.			
Chronic toxicity	✓	✓	✓
Acute toxicity			
g. Provide the type of test performed.			
Static	✓	✓	✓
Static-renewal			
Flow-through			
h. Source of dilution water. If laboratory water, specify type; if receiving water, specify source.			
Laboratory water			
Receiving water	seawater	seawater	seawater
i. Type of dilution water. If salt water, specify "natural" or type of artificial sea salts or brine used.			
Fresh water			
Salt water	natural	natural	natural
j. Give the percentage effluent used for all concentrations in the test series.			
	0.00 0.16	0.00 0.16	0.00 0.16
	0.32 0.63	0.32 0.63	0.32 0.63
	1.26 2.52	1.26 2.52	1.26 2.52

FACILITY NAME AND PERMIT NUMBER:

Honouliuli Regional Wastewater Treatment Plant - Permit No. HI 00208077

Form Approved 1/14/99
OMB Number 2040-0086

	Test number: HO090503	Test number: HO100203	Test number: HO110303
k. Parameters measured during the test. (State whether parameter meets test method specifications)			
pH	Yes	Yes	Yes
Salinity	Yes	Yes	Yes
Temperature	Yes	Yes	Yes
Ammonia	Not measured	Not measured	Not measured
Dissolved oxygen	Yes	Yes	Yes
l. Test Results.			
Acute:			
Percent survival in 100% effluent	%	%	%
LC50	%	%	%
95% C.I.	%	%	%
Control percent survival	%	%	%
Other (describe)			
Chronic:			
NOEC REPRODUCTION	0.63 %	0.63 %	1.26 %
IC25	%	%	%
Control percent survival	%	%	%
Other (describe) NOEC SURVIVAL	%	%	%
m. Quality Control/Quality Assurance.			
Is reference toxicant data available?	Yes	Yes	Yes
Was reference toxicant test within acceptable bounds?	Yes	Yes	Yes
What date was reference toxicant test run (MM/DD/YYYY)?	09/05/03	10/02/03	11/03/03
Other (describe)			

E.3. Toxicity Reduction Evaluation . Is the treatment works involved in a Toxicity Reduction Evaluation?

___Yes ✔ No If yes, describe:

FACILITY NAME AND PERMIT NUMBER:

Honouliuli Regional Wastewater Treatment Plant - Permit No. HI 00208077

Form Approved 1/14/99
OMB Number 2040-0086

	Test number: HO120403	Test number: HO010704	Test number: HO020504
a. Test information.			
Test species & test method number	T. gratilla (draft method)	T. gratilla (draft method)	T. gratilla (draft method)
Age at initiation of test	Not applicable	Not applicable	Not applicable
Outfall number	001	001	001
Dates sample collected	12/03/03 - 12/04/03	01/06/04 - 01/07/04	02/04/04 - 02/05/04
Date test started	12/04/03	01/07/04	02/05/04
Duration	1 hour 20 minutes	1 hour 20 minutes	1 hour 20 minutes
b. Give toxicity test methods followed.			
Manual title	Not applicable	Not applicable	Not applicable
Edition number and year of publication	Not applicable	Not applicable	Not applicable
Page number(s)	Not applicable	Not applicable	Not applicable
c. Give the sample collection method(s) used. For multiple grab samples, indicate the number of grab samples used.			
24-Hour composite	Automatic Flow Composite	Automatic Flow Composite	Automatic Flow Composite
Grab			
d. Indicate where the sample was taken in relation to disinfection. (Check all that apply for each)			
Before disinfection			
After disinfection			
After dechlorination			
e. Describe the point in the treatment process at which the sample was collected.			
Sample was collected:	Downstream from all plant additions	Downstream from all plant additions	Downstream from all plant additions
f. For each test, include whether the test was intended to assess chronic toxicity, acute toxicity, or both.			
Chronic toxicity	✓	✓	✓
Acute toxicity			
g. Provide the type of test performed.			
Static	✓	✓	✓
Static-renewal			
Flow-through			
h. Source of dilution water. If laboratory water, specify type; if receiving water, specify source.			
Laboratory water			
Receiving water	seawater	seawater	seawater
i. Type of dilution water. If salt water, specify "natural" or type of artificial sea salts or brine used.			
Fresh water			
Salt water	natural	natural	natural
j. Give the percentage effluent used for all concentrations in the test series.			
	0.00 0.16	0.00 0.16	0.00 0.16
	0.32 0.63	0.32 0.63	0.32 0.63
	1.26 2.52	1.26 2.52	1.26 2.52

FACILITY NAME AND PERMIT NUMBER:

Honouliuli Regional Wastewater Treatment Plant - Permit No. HI 00208077

Form Approved 1/14/99
OMB Number 2040-0086

	Test number: HO120403	Test number: HO010704	Test number: HO020504
k. Parameters measured during the test. (State whether parameter meets test method specifications)			
pH	Yes	Yes	Yes
Salinity	Yes	Yes	Yes
Temperature	Yes	Yes	Yes
Ammonia	Not measured	Not measured	Not measured
Dissolved oxygen	Yes	Yes	Yes
l. Test Results.			
Acute:			
Percent survival in 100% effluent	%	%	%
LC50	%	%	%
95% C.I.	%	%	%
Control percent survival	%	%	%
Other (describe)			
Chronic:			
NOEC REPRODUCTION	2.52 %	2.52 %	2.52 %
IC25	%	%	%
Control percent survival	%	%	%
Other (describe) NOEC SURVIVAL	%	%	%
m. Quality Control/Quality Assurance.			
Is reference toxicant data available?	Yes	Yes	Yes
Was reference toxicant test within acceptable bounds?	Yes	Yes	Yes
What date was reference toxicant test run (MM/DD/YYYY)?	12/04/03	01/07/04	02/05/04
Other (describe)			

E.3. Toxicity Reduction Evaluation . Is the treatment works involved in a Toxicity Reduction Evaluation?

___Yes ✔ No If yes, describe:

FACILITY NAME AND PERMIT NUMBER:

Honouliuli Regional Wastewater Treatment Plant - Permit No. HI 00208077

Form Approved 1/14/99
OMB Number 2040-0086

	Test number: HO030504	Test number: HO040604	Test number: HO050704
a. Test information.			
Test species & test method number	T. gratilla (draft method)	T. gratilla (draft method)	T. gratilla (draft method)
Age at initiation of test	Not applicable	Not applicable	Not applicable
Outfall number	001	001	001
Dates sample collected	03/04/04 - 03/05/04	04/05/04 - 04/0604	05/06/04 - 05/07/04
Date test started	03/05/04	04/06/04	05/07/04
Duration	1 hour 20 minutes	1 hour 20 minutes	1 hour 20 minutes
b. Give toxicity test methods followed.			
Manual title	Not applicable	Not applicable	Not applicable
Edition number and year of publication	Not applicable	Not applicable	Not applicable
Page number(s)	Not applicable	Not applicable	Not applicable
c. Give the sample collection method(s) used. For multiple grab samples, indicate the number of grab samples used.			
24-Hour composite	Automatic Flow Composite	Automatic Flow Composite	Automatic Flow Composite
Grab			
d. Indicate where the sample was taken in relation to disinfection. (Check all that apply for each)			
Before disinfection			
After disinfection			
After dechlorination			
e. Describe the point in the treatment process at which the sample was collected.			
Sample was collected:	Downstream from all plant additions	Downstream from all plant additions	Downstream from all plant additions
f. For each test, include whether the test was intended to assess chronic toxicity, acute toxicity, or both.			
Chronic toxicity	✓	✓	✓
Acute toxicity			
g. Provide the type of test performed.			
Static	✓	✓	✓
Static-renewal			
Flow-through			
h. Source of dilution water. If laboratory water, specify type; if receiving water, specify source.			
Laboratory water			
Receiving water	seawater	seawater	seawater
i. Type of dilution water. If salt water, specify "natural" or type of artificial sea salts or brine used.			
Fresh water			
Salt water	natural	natural	natural
j. Give the percentage effluent used for all concentrations in the test series.			
	0.00 0.16	0.00 0.16	0.00 0.16
	0.32 0.63	0.32 0.63	0.32 0.63
	1.26 2.52	1.26 2.52	1.26 2.52

FACILITY NAME AND PERMIT NUMBER:

Honouliuli Regional Wastewater Treatment Plant - Permit No. HI 00208077

Form Approved 1/14/99
OMB Number 2040-0086

	Test number: HO030504	Test number: HO040604	Test number: HO050704
k. Parameters measured during the test. (State whether parameter meets test method specifications)			
pH	Yes	Yes	Yes
Salinity	Yes	Yes	Yes
Temperature	Yes	Yes	Yes
Ammonia	Not measured	Not measured	Not measured
Dissolved oxygen	Yes	Yes	Yes
l. Test Results.			
Acute:			
Percent survival in 100% effluent	%	%	%
LC50	%	%	%
95% C.I.	%	%	%
Control percent survival	%	%	%
Other (describe)			
Chronic:			
NOEC REPRODUCTION	2.52 %	2.52 %	2.52 %
IC25	%	%	%
Control percent survival	%	%	%
Other (describe) NOEC SURVIVAL	%	%	%
m. Quality Control/Quality Assurance.			
Is reference toxicant data available?	Yes	Yes	Yes
Was reference toxicant test within acceptable bounds?	Yes	Yes	Yes
What date was reference toxicant test run (MM/DD/YYYY)?	03/05/04	04/06/04	05/07/04
Other (describe)			

E.3. Toxicity Reduction Evaluation . Is the treatment works involved in a Toxicity Reduction Evaluation?

✔ Yes ____ No If yes, describe:

Results from WET testing on 05/07/04 indicated presence of toxicity that exceeded NPDES permit compliance value. A series of accelerated tests was scheduled to determine persistence of toxicity.

FACILITY NAME AND PERMIT NUMBER:

Honouliuli Regional Wastewater Treatment Plant - Permit No. HI 00208077

Form Approved 1/14/99
OMB Number 2040-0086

	Test number: HO051404	Test number: HO051704	Test number: HO052304
a. Test information.			
Test species & test method number	T. gratilla (draft method)	T. gratilla (draft method)	T. gratilla (draft method)
Age at initiation of test	Not applicable	Not applicable	Not applicable
Outfall number	001	001	001
Dates sample collected	05/13/04 - 05/14/04	05/16/04 - 05/17/04	05/22/04 - 05/23/04
Date test started	05/14/04	05/17/04	05/23/04
Duration	1 hour 20 minutes	1 hour 20 minutes	1 hour 20 minutes
b. Give toxicity test methods followed.			
Manual title	Not applicable	Not applicable	Not applicable
Edition number and year of publication	Not applicable	Not applicable	Not applicable
Page number(s)	Not applicable	Not applicable	Not applicable
c. Give the sample collection method(s) used. For multiple grab samples, indicate the number of grab samples used.			
24-Hour composite	Automatic Flow Composite	Automatic Flow Composite	Automatic Flow Composite
Grab			
d. Indicate where the sample was taken in relation to disinfection. (Check all that apply for each)			
Before disinfection			
After disinfection			
After dechlorination			
e. Describe the point in the treatment process at which the sample was collected.			
Sample was collected:	Downstream from all plant additions	Downstream from all plant additions	Downstream from all plant additions
f. For each test, include whether the test was intended to assess chronic toxicity, acute toxicity, or both.			
Chronic toxicity	✓	✓	✓
Acute toxicity			
g. Provide the type of test performed.			
Static	✓	✓	✓
Static-renewal			
Flow-through			
h. Source of dilution water. If laboratory water, specify type; if receiving water, specify source.			
Laboratory water			
Receiving water	seawater	seawater	seawater
i. Type of dilution water. If salt water, specify "natural" or type of artificial sea salts or brine used.			
Fresh water			
Salt water	natural	natural	natural
j. Give the percentage effluent used for all concentrations in the test series.			
	0.00 0.16	0.00 0.16	0.00 0.16
	0.32 0.63	0.32 0.63	0.32 0.63
	1.26 2.52	1.26 2.52	1.26 2.52

FACILITY NAME AND PERMIT NUMBER:

Honouliuli Regional Wastewater Treatment Plant - Permit No. HI 00208077

Form Approved 1/14/99
OMB Number 2040-0086

	Test number: HO051404	Test number: HO051704	Test number: HO052304
k. Parameters measured during the test. (State whether parameter meets test method specifications)			
pH	Yes	Yes	Yes
Salinity	Yes	Yes	Yes
Temperature	Yes	Yes	Yes
Ammonia	Not measured	Not measured	Not measured
Dissolved oxygen	Yes	Yes	Yes
l. Test Results.			
Acute:			
Percent survival in 100% effluent	%	%	%
LC50	%	%	%
95% C.I.	%	%	%
Control percent survival	%	%	%
Other (describe)			
Chronic:			
NOEC REPRODUCTION	2.52 %	2.52 %	2.52 %
IC25	%	%	%
Control percent survival	%	%	%
Other (describe) NOEC SURVIVAL	%	%	%
m. Quality Control/Quality Assurance.			
Is reference toxicant data available?	Yes	Yes	Yes
Was reference toxicant test within acceptable bounds?	Yes	Yes	Yes
What date was reference toxicant test run (MM/DD/YYYY)?	05/14/04	05/17/04	05/23/04
Other (describe)			

E.3. Toxicity Reduction Evaluation . Is the treatment works involved in a Toxicity Reduction Evaluation?

✔ Yes ____ No If yes, describe:

Results from WET testing on 05/07/04 indicated presence of toxicity that exceeded NPDES permit compliance value. A series of accelerated tests showed the absence of persistent toxicity in the effluent.

FACILITY NAME AND PERMIT NUMBER:

Honouliuli Regional Wastewater Treatment Plant - Permit No. HI 00208077

Form Approved 1/14/99
OMB Number 2040-0086

	Test number: HO060204	Test number: HO061004	Test number: HO061604
a. Test information.			
Test species & test method number	T. gratilla (draft method)	T. gratilla (draft method)	T. gratilla (draft method)
Age at initiation of test	Not applicable	Not applicable	Not applicable
Outfall number	001	001	001
Dates sample collected	06/01/04 - 06/02/04	06/09/04 - 06/10/04	06/15/04 - 06/16/04
Date test started	06/02/04	06/10/04	06/16/04
Duration	1 hour 20 minutes	1 hour 20 minutes	1 hour 20 minutes
b. Give toxicity test methods followed.			
Manual title	Not applicable	Not applicable	Not applicable
Edition number and year of publication	Not applicable	Not applicable	Not applicable
Page number(s)	Not applicable	Not applicable	Not applicable
c. Give the sample collection method(s) used. For multiple grab samples, indicate the number of grab samples used.			
24-Hour composite	Automatic Flow Composite	Automatic Flow Composite	Automatic Flow Composite
Grab			
d. Indicate where the sample was taken in relation to disinfection. (Check all that apply for each)			
Before disinfection			
After disinfection			
After dechlorination			
e. Describe the point in the treatment process at which the sample was collected.			
Sample was collected:	Downstream from all plant additions	Downstream from all plant additions	Downstream from all plant additions
f. For each test, include whether the test was intended to assess chronic toxicity, acute toxicity, or both.			
Chronic toxicity	✓	✓	✓
Acute toxicity			
g. Provide the type of test performed.			
Static	✓	✓	✓
Static-renewal			
Flow-through			
h. Source of dilution water. If laboratory water, specify type; if receiving water, specify source.			
Laboratory water			
Receiving water	seawater	seawater	seawater
i. Type of dilution water. If salt water, specify "natural" or type of artificial sea salts or brine used.			
Fresh water			
Salt water	natural	natural	natural
j. Give the percentage effluent used for all concentrations in the test series.			
	0.00 0.16	0.00 0.16	0.00 0.16
	0.32 0.63	0.32 0.63	0.32 0.63
	1.26 2.52	1.26 2.52	1.26 2.52

FACILITY NAME AND PERMIT NUMBER:

Honouliuli Regional Wastewater Treatment Plant - Permit No. HI 00208077

Form Approved 1/14/99
OMB Number 2040-0086

	Test number: HO060204	Test number: HO061004	Test number: HO061604
k. Parameters measured during the test. (State whether parameter meets test method specifications)			
pH	Yes	Yes	Yes
Salinity	Yes	Yes	Yes
Temperature	Yes	Yes	Yes
Ammonia	Not measured	Not measured	Not measured
Dissolved oxygen	Yes	Yes	Yes
l. Test Results.			
Acute:			
Percent survival in 100% effluent	%	%	%
LC50	%	%	%
95% C.I.	%	%	%
Control percent survival	%	%	%
Other (describe)			
Chronic:			
NOEC REPRODUCTION	2.52 %	2.52 %	1.26 %
IC25	%	%	%
Control percent survival	%	%	%
Other (describe) NOEC SURVIVAL	%	%	%
m. Quality Control/Quality Assurance.			
Is reference toxicant data available?	Yes	Yes	Yes
Was reference toxicant test within acceptable bounds?	Yes	Yes	Yes
What date was reference toxicant test run (MM/DD/YYYY)?	06/02/04	06/10/04	06/16/04
Other (describe)			

E.3. Toxicity Reduction Evaluation . Is the treatment works involved in a Toxicity Reduction Evaluation?

✔ Yes ____ No If yes, describe:

Results from WET testing on 05/07/04 indicated presence of toxicity that exceeded NPDES permit compliance value. A series of accelerated tests showed the absence of persistent toxicity in the effluent.

E.4. Summary of Submitted Biomonitoring Test Information If you have submitted biomonitoring test information, or information regarding the cause of toxicity, within the past four and one-half years, provide the dates the information was submitted to the permitting authority and a summary of the results.

Date submitted: _____ (MM/DD/YYYY)

Summary of results: (see instructions)

_____

_____

_____

END OF PART E.

REFER TO THE APPLICATION OVERVIEW TO DETERMINE WHICH OTHER PARTS OF FORM 2A YOU MUST COMPLETE.

Honouliuli Regional Wastewater Treatment Plant
Permit No. HI 0020877

PART E. TOXICITY TESTING DATA

Individual test data : Method 1002.0 *Ceriodaphnia dubia*

PART E. TOXICITY TESTING DATA

Individual test data : Method 1002.0 *Ceriodaphnia dubia*

FACILITY NAME AND PERMIT NUMBER:
Honouliuli Regional Wastewater Treatment Plant - Permit No. HI 0020877

Form Approved 1/14/99
OMB Number 2040-0086

SUPPLEMENTAL APPLICATION INFORMATION

PART E. TOXICITY TESTING DATA

POTWs meeting one or more of the following criteria must provide the results of whole effluent toxicity tests for acute or chronic toxicity for each of the facility's discharge points: 1) POTWs with a design flow rate greater than or equal to 1.0 mgd; 2) POTWs with a pretreatment program (or those that are required to have one under 40 CFR Part 403); or 3) POTWs required by the permitting authority to submit data for these parameters.

- At a minimum, these results must include quarterly testing for a 12-month period within the past 1 year using multiple species (minimum of two species), or the results from four tests performed at least annually in the four and one-half years prior to the application, provided the results show no appreciable toxicity, and testing for acute and/or chronic toxicity, depending on the range of receiving water dilution. Do not include information on combined sewer overflows in this section. All information reported must be based on data collected through analysis conducted using 40 CFR Part 136 methods. In addition, this data must comply with QA/QC requirements of 40 CFR Part 136 and other appropriate
- QA/QC requirements for standard methods for analytes not addressed by 40 CFR Part 136.
  In addition, submit the results of any other whole effluent toxicity tests from the past four and one-half years. If a whole effluent toxicity test conducted during the past four and one-half years revealed toxicity, provide any information on the cause of the toxicity or any results of a toxicity reduction evaluation, if one was conducted.
- If you have already submitted any of the information requested in Part E, you need not submit it again. Rather, provide the information requested in question E.4 for previously submitted information. If EPA methods were not used, report the reasons for using alternate methods. If test summaries are available that contain all of the information requested below, they may be submitted in place of Part E.

If no biomonitoring data is required, do not complete Part E. Refer to the Application Overview for directions on which other sections of the form to complete.

E.1. Required Tests.

Indicate the number of whole effluent toxicity tests conducted in the past four and one-half years.

54 chronic _____ acute

E.2. Individual Test Data. Complete the following chart for each whole effluent toxicity test conducted in the last four and one-half years. Allow one column per test (where each species constitutes a test). Copy this page if more than three tests are being reported.

	Test number: HO012000	Test number: HO020200	Test number: HO031500
a. Test information.			
Test species & test method number	C. dubia 1002.0	C. dubia 1002.0	C. dubia 1002.0
Age at initiation of test	< 24 hours	< 24 hours	< 24 hours
Outfall number	001	001	001
Dates sample collected	01/19/00 - 01/26/00	02/01/00 - 02/07/00	03/14/00 - 03/20/00
Date test started	01/20/00	02/02/00	03/15/00
Duration	7 days	6 days	6 days
b. Give toxicity test methods followed.			
Manual title	Short-Term Methods For Estimating The Chronic Toxicity of Effluents and Receiving Water to Freshwater Organisms	Short-Term Methods For Estimating The Chronic Toxicity of Effluents and Receiving Water to Freshwater Organisms	Short-Term Methods For Estimating The Chronic Toxicity of Effluents and Receiving Water to Freshwater Organisms
Edition number and year of publication	Third Edition, July 1994	Third Edition, July 1994	Third Edition, July 1994
Page number(s)	144 - 189	144 - 189	144 - 189
c. Give the sample collection method(s) used. For multiple grab samples, indicate the number of grab samples used.			
24-Hour composite	Automatic Flow Composite	Automatic Flow Composite	Automatic Flow Composite
Grab			
d. Indicate where the sample was taken in relation to disinfection. (Check all that apply for each)			
Before disinfection			
After disinfection			
After dechlorination			

FACILITY NAME AND PERMIT NUMBER:

Honouliuli Regional Wastewater Treatment Plant - Permit No. HI 0020877

Form Approved 1/14/99
OMB Number 2040-0086

	Test number: HO012000	Test number: HO020200	Test number: HO031500
e. Describe the point in the treatment process at which the sample was collected.			
Sample was collected:	Downstream from all plant additions	Downstream from all plant additions	Downstream from all plant additions
f. For each test, include whether the test was intended to assess chronic toxicity, acute toxicity, or both.			
Chronic toxicity	✓	✓	✓
Acute toxicity			
g. Provide the type of test performed.			
Static			
Static-renewal	✓	✓	✓
Flow-through			
h. Source of dilution water. If laboratory water, specify type; if receiving water, specify source.			
Laboratory water	Synthetic Moderate Hard Water	Synthetic Moderate Hard Water	Synthetic Moderate Hard Water
Receiving water			
i. Type of dilution water. If salt water, specify "natural" or type of artificial sea salts or brine used.			
Fresh water	✓	✓	✓
Salt water			
j. Give the percentage effluent used for all concentrations in the test series.			
	0.00 0.16	0.00 0.16	0.00 0.16
	0.32 0.63	0.32 0.63	0.32 0.63
	1.26 2.52	1.26 2.52	1.26 2.52
k. Parameters measured during the test. (State whether parameter meets test method specifications)			
pH	Yes	Yes	Yes
Salinity	Yes	Yes	Yes
Temperature	Yes	Yes	Yes
Ammonia	Not measured	Not measured	Not measured
Dissolved oxygen	Yes	Yes	Yes
l. Test Results.			
Acute:			
Percent survival in 100% effluent	%	%	%
LC50			
95% C.I.	%	%	%
Control percent survival	%	%	%
Other (describe)			

FACILITY NAME AND PERMIT NUMBER:

Honouliuli Regional Wastewater Treatment Plant - Permit No. HI 0020877

Form Approved 1/14/99
OMB Number 2040-0086

Chronic:

NOEC REPRODUCTION	2.52 %	2.52 %	2.52 %
IC25	%	%	%
Control percent survival	%	%	%
Other (describe) NOEC SURVIVAL	2.52 %	2.52 %	2.52 %
m. Quality Control/Quality Assurance.			
Is reference toxicant data available?	Yes	Yes	Yes
Was reference toxicant test within acceptable bounds?	Yes	Yes	Yes
What date was reference toxicant test run (MM/DD/YYYY)?	01/29/00	02/09/00	03/07/00
Other (describe)			

E.3. Toxicity Reduction Evaluation. Is the treatment works involved in a Toxicity Reduction Evaluation?

____Yes ✓ No If yes, describe: _____

FACILITY NAME AND PERMIT NUMBER: Honouliuli WWTP HI 0020877

Form Approved 1/14/99
OMB Number 2040-0086

	Test number: HO041000	Test number: HO051500	Test number: HO061000
a. Test information.			
Test species & test method number	C. dubia 1002.0	C. dubia 1002.0	C. dubia 1002.0
Age at initiation of test	< 24 hours	< 24 hours	< 24 hours
Outfall number	001	001	001
Dates sample collected	04/09/00 - 04/15/00	05/14/00 - 05/20/00	06/09/00 - 06/15/00
Date test started	04/10/00	05/15/00	06/10/00
Duration	6 days	6 days	6 days
b. Give toxicity test methods followed.			
Manual title	Short-Term Methods For Estimating The Chronic Toxicity of Effluents and Receiving Water to Freshwater Organisms	Short-Term Methods For Estimating The Chronic Toxicity of Effluents and Receiving Water to Freshwater Organisms	Short-Term Methods For Estimating The Chronic Toxicity of Effluents and Receiving Water to Freshwater Organisms
Edition number and year of publication	Third Edition, July 1994	Third Edition, July 1994	Third Edition, July 1994
Page number(s)	144 - 189	144 - 189	144 - 189
c. Give the sample collection method(s) used. For multiple grab samples, indicate the number of grab samples used.			
24-Hour composite	Automatic Flow Composite	Automatic Flow Composite	Automatic Flow Composite
Grab			
d. Indicate where the sample was taken in relation to disinfection. (Check all that apply for each)			
Before disinfection			
After disinfection			
After dechlorination			
e. Describe the point in the treatment process at which the sample was collected.			
Sample was collected:	Downstream from all plant additions	Downstream from all plant additions	Downstream from all plant additions
f. For each test, include whether the test was intended to assess chronic toxicity, acute toxicity, or both.			
Chronic toxicity	✓	✓	✓
Acute toxicity			
g. Provide the type of test performed.			
Static			
Static-renewal	✓	✓	✓
Flow-through			
h. Source of dilution water. If laboratory water, specify type; if receiving water, specify source.			
Laboratory water	Synthetic Moderate Hard Water	Synthetic Moderate Hard Water	Synthetic Moderate Hard Water
Receiving water			
i. Type of dilution water. If salt water, specify "natural" or type of artificial sea salts or brine used.			
Fresh water	✓	✓	✓
Salt water			
j. Give the percentage effluent used for all concentrations in the test series.			
	0.00	0.00	0.00
	0.16	0.16	0.16
	0.32	0.32	0.32
	0.63	0.63	0.63
	1.26	1.26	1.26
	2.52	2.52	2.52

FACILITY NAME AND PERMIT NUMBER:	Honouliuli WWTP HI 0020877		Form Approved 1/14/99 OMB Number 2040-0086
	Test number: HO041000	Test number: HO051500	Test number: HO061000
k. Parameters measured during the test. (State whether parameter meets test method specifications)			
pH	Yes	Yes	Yes
Salinity	Yes	Yes	Yes
Temperature	Yes	Yes	Yes
Ammonia	Not measured	Not measured	Not measured
Dissolved oxygen	Yes	Yes	Yes
l. Test Results.			
Acute:			
Percent survival in 100% effluent	%	%	%
LC_{50}			
95% C.I.	%	%	%
Control percent survival	%	%	%
Other (describe)			
Chronic:			
NOEC REPRODUCTION	2.52 %	2.52 %	2.52 %
IC_{25}	%	%	%
Control percent survival	%	%	%
Other (describe) NOEC SURVIVAL	2.52 %	2.52 %	2.52 %
m. Quality Control/Quality Assurance.			
Is reference toxicant data available?	Yes	Yes	Yes
Was reference toxicant test within acceptable bounds?	Yes	Yes	Yes
What date was reference toxicant test run (MM/DD/YYYY)?	04/17/00	05/08/00	06/18/00
Other (describe)			

E.3. Toxicity Reduction Evaluation. Is the treatment works involved in a Toxicity Reduction Evaluation?

___Yes ✓ No If yes, describe: _____

FACILITY NAME AND PERMIT NUMBER: Honouliuli WWTP
HI 0020877

Form Approved 1/14/99
OMB Number 2040-0086

	Test number: HO071900	Test number: HO082200	Test number: HO092200
a. Test information.			
Test species & test method number	C. dubia 1002.0	C. dubia 1002.0	C. dubia 1002.0
Age at initiation of test	< 24 hours	< 24 hours	< 24 hours
Outfall number	001	001	001
Dates sample collected	07/18/00 - 07/24/00	05/14/00 - 05/20/00	06/09/00 - 06/15/00
Date test started	07/19/00	08/22/00	09/22/00
Duration	6 days	6 days	6 days
b. Give toxicity test methods followed.			
Manual title	Short-Term Methods For Estimating The Chronic Toxicity of Effluents and Receiving Water to Freshwater Organisms	Short-Term Methods For Estimating The Chronic Toxicity of Effluents and Receiving Water to Freshwater Organisms	Short-Term Methods For Estimating The Chronic Toxicity of Effluents and Receiving Water to Freshwater Organisms
Edition number and year of publication	Third Edition, July 1994	Third Edition, July 1994	Third Edition, July 1994
Page number(s)	144 - 189	144 - 189	144 - 189
c. Give the sample collection method(s) used. For multiple grab samples, indicate the number of grab samples used.			
24-Hour composite	Automatic Flow Composite	Automatic Flow Composite	Automatic Flow Composite
Grab			
d. Indicate where the sample was taken in relation to disinfection. (Check all that apply for each)			
Before disinfection			
After disinfection			
After dechlorination			
e. Describe the point in the treatment process at which the sample was collected.			
Sample was collected:	Downstream from all plant additions	Downstream from all plant additions	Downstream from all plant additions
f. For each test, include whether the test was intended to assess chronic toxicity, acute toxicity, or both.			
Chronic toxicity	✓	✓	✓
Acute toxicity			
g. Provide the type of test performed.			
Static			
Static-renewal	✓	✓	✓
Flow-through			
h. Source of dilution water. If laboratory water, specify type; if receiving water, specify source.			
Laboratory water	Synthetic Moderate Hard Water	Synthetic Moderate Hard Water	Synthetic Moderate Hard Water
Receiving water			
i. Type of dilution water. If salt water, specify "natural" or type of artificial sea salts or brine used.			
Fresh water	✓	✓	✓
Salt water			
j. Give the percentage effluent used for all concentrations in the test series.			
	0.00	0.00	0.00
	0.16	0.16	0.16
	0.32	0.32	0.32
	0.63	0.63	0.63
	1.26	1.26	1.26
	2.52	2.52	2.52

FACILITY NAME AND PERMIT NUMBER:	Honouliuli WWTP HI 0020877		Form Approved 1/14/99 OMB Number 2040-0086
	Test number: HO071900	Test number: HO082200	Test number: HO092200
k. Parameters measured during the test. (State whether parameter meets test method specifications)			
pH	Yes	Yes	Yes
Salinity	Yes	Yes	Yes
Temperature	Yes	Yes	Yes
Ammonia	Not measured	Not measured	Not measured
Dissolved oxygen	Yes	Yes	Yes
l. Test Results.			
Acute:			
Percent survival in 100% effluent	%	%	%
LC_{50}			
95% C.I.	%	%	%
Control percent survival	%	%	%
Other (describe)			
Chronic:			
NOEC REPRODUCTION	2.52 %	2.52 %	2.52 %
IC_{25}	%	%	%
Control percent survival	%	%	%
Other (describe) NOEC SURVIVAL	2.52 %	2.52 %	2.52 %
m. Quality Control/Quality Assurance.			
Is reference toxicant data available?	Yes	Yes	Yes
Was reference toxicant test within acceptable bounds?	Yes	Yes	Yes
What date was reference toxicant test run (MM/DD/YYYY)?	07/10/00	08/09/00	09/15/00
Other (describe)			

E.3. Toxicity Reduction Evaluation. Is the treatment works involved in a Toxicity Reduction Evaluation?

___Yes ✓ No If yes, describe: _____

FACILITY NAME AND PERMIT NUMBER: **Honouliuli WWTP**
HI 0020877

Form Approved 1/14/99
OMB Number 2040-0086

	Test number: HO101800	Test number: HO110900	Test number: HO120800
a. Test information.			
Test species & test method number	C. dubia 1002.0	C. dubia 1002.0	C. dubia 1002.0
Age at initiation of test	< 24 hours	< 24 hours	< 24 hours
Outfall number	001	001	001
Dates sample collected	10/18/00 - 10/23/00	11/08/00 - 11/14/00	12/08/00 - 12/14/00
Date test started	10/18/00	11/09/00	12/08/00
Duration	6 days	6 days	6 days
b. Give toxicity test methods followed.			
Manual title	Short-Term Methods For Estimating The Chronic Toxicity of Effluents and Receiving Water to Freshwater Organisms	Short-Term Methods For Estimating The Chronic Toxicity of Effluents and Receiving Water to Freshwater Organisms	Short-Term Methods For Estimating The Chronic Toxicity of Effluents and Receiving Water to Freshwater Organisms
Edition number and year of publication	Third Edition, July 1994	Third Edition, July 1994	Third Edition, July 1994
Page number(s)	144 - 189	144 - 189	144 - 189
c. Give the sample collection method(s) used. For multiple grab samples, indicate the number of grab samples used.			
24-Hour composite	Automatic Flow Composite	Automatic Flow Composite	Automatic Flow Composite
Grab			
d. Indicate where the sample was taken in relation to disinfection. (Check all that apply for each)			
Before disinfection			
After disinfection			
After dechlorination			
e. Describe the point in the treatment process at which the sample was collected.			
Sample was collected:	Downstream from all plant additions	Downstream from all plant additions	Downstream from all plant additions
f. For each test, include whether the test was intended to assess chronic toxicity, acute toxicity, or both.			
Chronic toxicity	✓	✓	✓
Acute toxicity			
g. Provide the type of test performed.			
Static			
Static-renewal	✓	✓	✓
Flow-through			
h. Source of dilution water. If laboratory water, specify type; if receiving water, specify source.			
Laboratory water	Synthetic Moderate Hard Water	Synthetic Moderate Hard Water	Synthetic Moderate Hard Water
Receiving water			
i. Type of dilution water. If salt water, specify "natural" or type of artificial sea salts or brine used.			
Fresh water	✓	✓	✓
Salt water			
j. Give the percentage effluent used for all concentrations in the test series.			
	0.00	0.00	0.00
	0.16	0.16	0.16
	0.32	0.32	0.32
	0.63	0.63	0.63
	1.26	1.26	1.26
	2.52	2.52	2.52

FACILITY NAME AND PERMIT NUMBER:	Honouliuli WWTP HI 0020877		Form Approved 1/14/99 OMB Number 2040-0086
	Test number: HO101800	Test number: HO110900	Test number: HO120800
k. Parameters measured during the test. (State whether parameter meets test method specifications)			
pH	Yes	Yes	Yes
Salinity	Yes	Yes	Yes
Temperature	Yes	Yes	Yes
Ammonia	Not measured	Not measured	Not measured
Dissolved oxygen	Yes	Yes	Yes
l. Test Results.			
Acute:			
Percent survival in 100% effluent	%	%	%
LC_{50}			
95% C.I.	%	%	%
Control percent survival	%	%	%
Other (describe)			
Chronic:			
NOEC REPRODUCTION	2.52 %	2.52 %	2.52 %
IC_{25}	%	%	%
Control percent survival	%	%	%
Other (describe) NOEC SURVIVAL	2.52 %	2.52 %	2.52 %
m. Quality Control/Quality Assurance.			
Is reference toxicant data available?	Yes	Yes	Yes
Was reference toxicant test within acceptable bounds?	Yes	Yes	Yes
What date was reference toxicant test run (MM/DD/YYYY)?	10/09/00	11/16/00	12/07/00
Other (describe)			

E.3. Toxicity Reduction Evaluation. Is the treatment works involved in a Toxicity Reduction Evaluation?

___Yes ✓ No If yes, describe: _____

FACILITY NAME AND PERMIT NUMBER:	Honouliuli WWTP HI 0020877		Form Approved 1/14/99 OMB Number 2040-0086
	Test number: HO011701	Test number: HO022101	Test number: HO031601
a. Test information.			
Test species & test method number	C. dubia 1002.0	C. dubia 1002.0	C. dubia 1002.0
Age at initiation of test	< 24 hours	< 24 hours	< 24 hours
Outfall number	001	001	001
Dates sample collected	01/16/01 - 01/22/01	02/20/01 - 02/26/01	03/15/01 - 03/21/01
Date test started	01/17/01	02/21/01	03/16/01
Duration	6 days	6 days	6 days
b. Give toxicity test methods followed.			
Manual title	Short-Term Methods For Estimating The Chronic Toxicity of Effluents and Receiving Water to Freshwater Organisms	Short-Term Methods For Estimating The Chronic Toxicity of Effluents and Receiving Water to Freshwater Organisms	Short-Term Methods For Estimating The Chronic Toxicity of Effluents and Receiving Water to Freshwater Organisms
Edition number and year of publication	Third Edition, July 1994	Third Edition, July 1994	Third Edition, July 1994
Page number(s)	144 - 189	144 - 189	144 - 189
c. Give the sample collection method(s) used. For multiple grab samples, indicate the number of grab samples used.			
24-Hour composite	Automatic Flow Composite	Automatic Flow Composite	Automatic Flow Composite
Grab			
d. Indicate where the sample was taken in relation to disinfection. (Check all that apply for each)			
Before disinfection			
After disinfection			
After dechlorination			
e. Describe the point in the treatment process at which the sample was collected.			
Sample was collected:	Downstream from all plant additions	Downstream from all plant additions	Downstream from all plant additions
f. For each test, include whether the test was intended to assess chronic toxicity, acute toxicity, or both.			
Chronic toxicity	✓	✓	✓
Acute toxicity			
g. Provide the type of test performed.			
Static			
Static-renewal	✓	✓	✓
Flow-through			
h. Source of dilution water. If laboratory water, specify type; if receiving water, specify source.			
Laboratory water	Synthetic Moderate Hard Water	Synthetic Moderate Hard Water	Synthetic Moderate Hard Water
Receiving water			
i. Type of dilution water. If salt water, specify "natural" or type of artificial sea salts or brine used.			
Fresh water	✓	✓	✓
Salt water			
j. Give the percentage effluent used for all concentrations in the test series.			
	0.00	0.00	0.00
	0.16	0.16	0.16
	0.32	0.32	0.32
	0.63	0.63	0.63
	1.26	1.26	1.26
	2.52	2.52	2.52

FACILITY NAME AND PERMIT NUMBER:	Honouliuli WWTP HI 0020877		Form Approved 1/14/99 OMB Number 2040-0086
	Test number: HO011701	Test number: HO022101	Test number: HO031601
k. Parameters measured during the test. (State whether parameter meets test method specifications)			
pH	Yes	Yes	Yes
Salinity	Yes	Yes	Yes
Temperature	Yes	Yes	Yes
Ammonia	Not measured	Not measured	Not measured
Dissolved oxygen	Yes	Yes	Yes
l. Test Results.			
Acute:			
Percent survival in 100% effluent	%	%	%
LC_{50}			
95% C.I.	%	%	%
Control percent survival	%	%	%
Other (describe)			
Chronic:			
NOEC REPRODUCTION	2.52 %	2.52 %	2.52 %
IC_{25}	%	%	%
Control percent survival	%	%	%
Other (describe) NOEC SURVIVAL	2.52 %	2.52 %	2.52 %
m. Quality Control/Quality Assurance.			
Is reference toxicant data available?	Yes	Yes	Yes
Was reference toxicant test within acceptable bounds?	Yes	Yes	Yes
What date was reference toxicant test run (MM/DD/YYYY)?	01/10/01	02/02/01	03/09/01
Other (describe)			

E.3. Toxicity Reduction Evaluation. Is the treatment works involved in a Toxicity Reduction Evaluation?

___Yes ✓ No If yes, describe: _____

FACILITY NAME AND PERMIT NUMBER: **Honouliuli WWTP** HI 0020877

Form Approved 1/14/99
OMB Number 2040-0086

	Test number: HO042301	Test number: HO051801	Test number: HO062201
a. Test information.			
Test species & test method number	C. dubia 1002.0	C. dubia 1002.0	C. dubia 1002.0
Age at initiation of test	< 24 hours	< 24 hours	< 24 hours
Outfall number	001	001	001
Dates sample collected	04/22/01 - 04/28/01	05/17/01 - 05/22/01	06/21/01 - 06/27/01
Date test started	04/23/01	05/18/01	06/22/01
Duration	6 days	5 days	6 days
b. Give toxicity test methods followed.			
Manual title	Short-Term Methods For Estimating The Chronic Toxicity of Effluents and Receiving Water to Freshwater Organisms	Short-Term Methods For Estimating The Chronic Toxicity of Effluents and Receiving Water to Freshwater Organisms	Short-Term Methods For Estimating The Chronic Toxicity of Effluents and Receiving Water to Freshwater Organisms
Edition number and year of publication	Third Edition, July 1994	Third Edition, July 1994	Third Edition, July 1994
Page number(s)	144 - 189	144 - 189	144 - 189
c. Give the sample collection method(s) used. For multiple grab samples, indicate the number of grab samples used.			
24-Hour composite	Automatic Flow Composite	Automatic Flow Composite	Automatic Flow Composite
Grab			
d. Indicate where the sample was taken in relation to disinfection. (Check all that apply for each)			
Before disinfection			
After disinfection			
After dechlorination			
e. Describe the point in the treatment process at which the sample was collected.			
Sample was collected:	Downstream from all plant additions	Downstream from all plant additions	Downstream from all plant additions
f. For each test, include whether the test was intended to assess chronic toxicity, acute toxicity, or both.			
Chronic toxicity	✓	✓	✓
Acute toxicity			
g. Provide the type of test performed.			
Static			
Static-renewal	✓	✓	✓
Flow-through			
h. Source of dilution water. If laboratory water, specify type; if receiving water, specify source.			
Laboratory water	Synthetic Moderate Hard Water	Synthetic Moderate Hard Water	Synthetic Moderate Hard Water
Receiving water			
i. Type of dilution water. It salt water, specify "natural" or type of artificial sea salts or brine used.			
Fresh water	✓	✓	✓
Salt water			
j. Give the percentage effluent used for all concentrations in the test series.			
	0.00	0.00	0.00
	0.16	0.16	0.16
	0.32	0.32	0.32
	0.63	0.63	0.63
	1.26	1.26	1.26
	2.52	2.52	2.52

FACILITY NAME AND PERMIT NUMBER:	Honouliuli WWTP HI 0020877		Form Approved 1/14/99 OMB Number 2040-0086
	Test number: HO042301	Test number: HO051801	Test number: HO062201
k. Parameters measured during the test. (State whether parameter meets test method specifications)			
pH	Yes	Yes	Yes
Salinity	Yes	Yes	Yes
Temperature	Yes	Yes	Yes
Ammonia	Not measured	Not measured	Not measured
Dissolved oxygen	Yes	Yes	Yes
l. Test Results.			
Acute:			
Percent survival in 100% effluent	%	%	%
LC_{50}			
95% C.I.	%	%	%
Control percent survival	%	%	%
Other (describe)			
Chronic:			
NOEC REPRODUCTION	2.52 %	2.52 %	2.52 %
IC_{25}	%	%	%
Control percent survival	%	%	%
Other (describe) NOEC SURVIVAL	2.52 %	2.52 %	2.52 %
m. Quality Control/Quality Assurance.			
Is reference toxicant data available?	Yes	Yes	Yes
Was reference toxicant test within acceptable bounds?	Yes	Yes	Yes
What date was reference toxicant test run (MM/DD/YYYY)?	04/17/01	05/10/01	06/03/01
Other (describe)			

E.3. Toxicity Reduction Evaluation. Is the treatment works involved in a Toxicity Reduction Evaluation?

____Yes ✓ No If yes, describe: _____

FACILITY NAME AND PERMIT NUMBER: **Honouliuli WWTP** HI 0020877

Form Approved 1/14/99
OMB Number 2040-0086

	Test number: HO072301	Test number: HO082101	Test number: HO092301
a. Test information.			
Test species & test method number	C. dubia 1002.0	C. dubia 1002.0	C. dubia 1002.0
Age at initiation of test	< 24 hours	< 24 hours	< 24 hours
Outfall number	001	001	001
Dates sample collected	07/22/01 - 07/27/01	08/20/01 - 08/26/01	09/22/01 - 09/27/01
Date test started	07/23/01	08/21/01	09/23/01
Duration	5 days	6 days	5 days
b. Give toxicity test methods followed.			
Manual title	Short-Term Methods For Estimating The Chronic Toxicity of Effluents and Receiving Water to Freshwater Organisms	Short-Term Methods For Estimating The Chronic Toxicity of Effluents and Receiving Water to Freshwater Organisms	Short-Term Methods For Estimating The Chronic Toxicity of Effluents and Receiving Water to Freshwater Organisms
Edition number and year of publication	Third Edition, July 1994	Third Edition, July 1994	Third Edition, July 1994
Page number(s)	144 - 189	144 - 189	144 - 189
c. Give the sample collection method(s) used. For multiple grab samples, indicate the number of grab samples used.			
24-Hour composite	Automatic Flow Composite	Automatic Flow Composite	Automatic Flow Composite
Grab			
d. Indicate where the sample was taken in relation to disinfection. (Check all that apply for each)			
Before disinfection			
After disinfection			
After dechlorination			
e. Describe the point in the treatment process at which the sample was collected.			
Sample was collected:	Downstream from all plant additions	Downstream from all plant additions	Downstream from all plant additions
f. For each test, include whether the test was intended to assess chronic toxicity, acute toxicity, or both.			
Chronic toxicity	✓	✓	✓
Acute toxicity			
g. Provide the type of test performed.			
Static			
Static-renewal	✓	✓	✓
Flow-through			
h. Source of dilution water. If laboratory water, specify type; if receiving water, specify source.			
Laboratory water	Synthetic Moderate Hard Water	Synthetic Moderate Hard Water	Synthetic Moderate Hard Water
Receiving water			
i. Type of dilution water. If salt water, specify "natural" or type of artificial sea salts or brine used.			
Fresh water	✓	✓	✓
Salt water			
j. Give the percentage effluent used for all concentrations in the test series.			
	0.00 0.16	0.00 0.16	0.00 0.16
	0.32 0.63	0.32 0.63	0.32 0.63
	1.26 2.52	1.26 2.52	1.26 2.52

FACILITY NAME AND PERMIT NUMBER:	Honouliuli WWTP HI 0020877		Form Approved 1/14/99 OMB Number 2040-0086
	Test number: HO072301	Test number: HO082101	Test number: HO092301
k. Parameters measured during the test. (State whether parameter meets test method specifications)			
pH	Yes	Yes	Yes
Salinity	Yes	Yes	Yes
Temperature	Yes	Yes	Yes
Ammonia	Not measured	Not measured	Not measured
Dissolved oxygen	Yes	Yes	Yes
l. Test Results.			
Acute:			
Percent survival in 100% effluent	%	%	%
LC_{50}			
95% C.I.	%	%	%
Control percent survival	%	%	%
Other (describe)			
Chronic:			
NOEC REPRODUCTION	2.52 %	2.52 %	2.52 %
IC_{25}	%	%	%
Control percent survival	%	%	%
Other (describe) NOEC SURVIVAL	2.52 %	2.52 %	2.52 %
m. Quality Control/Quality Assurance.			
Is reference toxicant data available?	Yes	Yes	Yes
Was reference toxicant test within acceptable bounds?	Yes	Yes	Yes
What date was reference toxicant test run (MM/DD/YYYY)?	07/15/01	08/09/01	09/09/01
Other (describe)			

E.3. Toxicity Reduction Evaluation. Is the treatment works involved in a Toxicity Reduction Evaluation?

___Yes ✓ No If yes, describe: _____

FACILITY NAME AND PERMIT NUMBER: **Honouliuli WWTP** HI 0020877

Form Approved 1/14/99
OMB Number 2040-0086

	Test number: HO101301	Test number: HO112401	Test number: HO121501
a. Test information.			
Test species & test method number	C. dubia 1002.0	C. dubia 1002.0	C. dubia 1002.0
Age at initiation of test	< 24 hours	< 24 hours	< 24 hours
Outfall number	001	001	001
Dates sample collected	10/12/01 - 10/18/01	11/23/01 - 11/29/01	12/14/01 - 12/20/01
Date test started	10/13/01	11/24/01	12/15/01
Duration	6 days	6 days	6 days
b. Give toxicity test methods followed.			
Manual title	Short-Term Methods For Estimating The Chronic Toxicity of Effluents and Receiving Water to Freshwater Organisms	Short-Term Methods For Estimating The Chronic Toxicity of Effluents and Receiving Water to Freshwater Organisms	Short-Term Methods For Estimating The Chronic Toxicity of Effluents and Receiving Water to Freshwater Organisms
Edition number and year of publication	Third Edition, July 1994	Third Edition, July 1994	Third Edition, July 1994
Page number(s)	144 - 189	144 - 189	144 - 189
c. Give the sample collection method(s) used. For multiple grab samples, indicate the number of grab samples used.			
24-Hour composite	Automatic Flow Composite	Automatic Flow Composite	Automatic Flow Composite
Grab			
d. Indicate where the sample was taken in relation to disinfection. (Check all that apply for each)			
Before disinfection			
After disinfection			
After dechlorination			
e. Describe the point in the treatment process at which the sample was collected.			
Sample was collected:	Downstream from all plant additions	Downstream from all plant additions	Downstream from all plant additions
f. For each test, include whether the test was intended to assess chronic toxicity, acute toxicity, or both.			
Chronic toxicity	✓	✓	✓
Acute toxicity			
g. Provide the type of test performed.			
Static			
Static-renewal	✓	✓	✓
Flow-through			
h. Source of dilution water. If laboratory water, specify type; if receiving water, specify source.			
Laboratory water	Synthetic Moderate Hard Water	Synthetic Moderate Hard Water	Synthetic Moderate Hard Water
Receiving water			
i. Type of dilution water. If salt water, specify "natural" or type of artificial sea salts or brine used.			
Fresh water	✓	✓	✓
Salt water			
j. Give the percentage effluent used for all concentrations in the test series.			
	0.00	0.00	0.00
	0.16	0.16	0.16
	0.32	0.32	0.32
	0.63	0.63	0.63
	1.26	1.26	1.26
	2.52	2.52	2.52

FACILITY NAME AND PERMIT NUMBER:	Honouliuli WWTP HI 0020877		Form Approved 1/14/99 OMB Number 2040-0086
	Test number: HO101301	Test number: HO112401	Test number: HO121501
k. Parameters measured during the test. (State whether parameter meets test method specifications)			
pH	Yes	Yes	Yes
Salinity	Yes	Yes	Yes
Temperature	Yes	Yes	Yes
Ammonia	Not measured	Not measured	Not measured
Dissolved oxygen	Yes	Yes	Yes
l. Test Results.			
Acute:			
Percent survival in 100% effluent	%	%	%
LC_{50}			
95% C.I.	%	%	%
Control percent survival	%	%	%
Other (describe)			
Chronic:			
NOEC REPRODUCTION	2.52 %	2.52 %	2.52 %
IC_{25}	%	%	%
Control percent survival	%	%	%
Other (describe) NOEC SURVIVAL	2.52 %	2.52 %	2.52 %
m. Quality Control/Quality Assurance.			
Is reference toxicant data available?	Yes	Yes	Yes
Was reference toxicant test within acceptable bounds?	Yes	Yes	Yes
What date was reference toxicant test run (MM/DD/YYYY)?	10/06/01	11/14/01	12/01/01
Other (describe)			

E.3. Toxicity Reduction Evaluation. Is the treatment works involved in a Toxicity Reduction Evaluation?

___Yes ✓ No If yes, describe: _____

FACILITY NAME AND PERMIT NUMBER: **Honouliuli WWTP** HI 0020877

Form Approved 1/14/99
OMB Number 2040-0086

	Test number: HO012302	Test number: HO022102	Test number: HO030402
a. Test information.			
Test species & test method number	C. dubia 1002.0	C. dubia 1002.0	C. dubia 1002.0
Age at initiation of test	< 24 hours	< 24 hours	< 24 hours
Outfall number	001	001	001
Dates sample collected	01/22/02 -01/28/02	02/20/02 -02/26/02	03/03/02 - 03/09/02
Date test started	01/23/02	02/21/02	03/04/02
Duration	6 days	6 days	6 days
b. Give toxicity test methods followed.			
Manual title	Short-Term Methods For Estimating The Chronic Toxicity of Effluents and Receiving Water to Freshwater Organisms	Short-Term Methods For Estimating The Chronic Toxicity of Effluents and Receiving Water to Freshwater Organisms	Short-Term Methods For Estimating The Chronic Toxicity of Effluents and Receiving Water to Freshwater Organisms
Edition number and year of publication	Third Edition, July 1994	Third Edition, July 1994	Third Edition, July 1994
Page number(s)	144 - 189	144 - 189	144 - 189
c. Give the sample collection method(s) used. For multiple grab samples, indicate the number of grab samples used.			
24-Hour composite	Automatic Flow Composite	Automatic Flow Composite	Automatic Flow Composite
Grab			
d. Indicate where the sample was taken in relation to disinfection. (Check all that apply for each)			
Before disinfection			
After disinfection			
After dechlorination			
e. Describe the point in the treatment process at which the sample was collected.			
Sample was collected:	Downstream from all plant additions	Downstream from all plant additions	Downstream from all plant additions
f. For each test, include whether the test was intended to assess chronic toxicity, acute toxicity, or both.			
Chronic toxicity	✓	✓	✓
Acute toxicity			
g. Provide the type of test performed.			
Static			
Static-renewal	✓	✓	✓
Flow-through			
h. Source of dilution water. If laboratory water, specify type; if receiving water, specify source.			
Laboratory water	Synthetic Moderate Hard Water	Synthetic Moderate Hard Water	Synthetic Moderate Hard Water
Receiving water			
i. Type of dilution water. If salt water, specify "natural" or type of artificial sea salts or brine used.			
Fresh water	✓	✓	✓
Salt water			
j. Give the percentage effluent used for all concentrations in the test series.			
	0.00	0.00	0.00
	0.16	0.16	0.16
	0.32	0.32	0.32
	0.63	0.63	0.63
	1.26	1.26	1.26
	2.52	2.52	2.52

FACILITY NAME AND PERMIT NUMBER:	Honouliuli WWTP HI 0020877		Form Approved 1/14/99 OMB Number 2040-0086
	Test number: HO012302	Test number: HO022102	Test number: HO030402
k. Parameters measured during the test. (State whether parameter meets test method specifications)			
pH	Yes	Yes	Yes
Salinity	Yes	Yes	Yes
Temperature	Yes	Yes	Yes
Ammonia	Not measured	Not measured	Not measured
Dissolved oxygen	Yes	Yes	Yes
l. Test Results.			
Acute:			
Percent survival in 100% effluent	%	%	%
LC_{50}			
95% C.I.	%	%	%
Control percent survival	%	%	%
Other (describe)			
Chronic:			
NOEC REPRODUCTION	2.52 %	2.52 %	2.52 %
IC_{25}	%	%	%
Control percent survival	%	%	%
Other (describe) NOEC SURVIVAL	2.52 %	2.52 %	2.52 %
m. Quality Control/Quality Assurance.			
Is reference toxicant data available?	Yes	Yes	Yes
Was reference toxicant test within acceptable bounds?	Yes	Yes	Yes
What date was reference toxicant test run (MM/DD/YYYY)?	01/10/02	02/10/02	03/11/02
Other (describe)			

E.3. Toxicity Reduction Evaluation. Is the treatment works involved in a Toxicity Reduction Evaluation?

___Yes ✓ No If yes, describe: _____

FACILITY NAME AND PERMIT NUMBER: Honouliuli WWTP
HI 0020877

Form Approved 1/14/99
OMB Number 2040-0086

	Test number: HO040902	Test number: HO051002	Test number: HO060302
a. Test information.			
Test species & test method number	C. dubia 1002.0	C. dubia 1002.0	C. dubia 1002.0
Age at initiation of test	< 24 hours	< 24 hours	< 24 hours
Outfall number	001	001	001
Dates sample collected	04/08/02 - 04/14/02	05/09/02 - 05/15/02	06/02/02 - 0608/02
Date test started	04/09/02	05/10/02	06/03/02
Duration	6 days	6 days	6 days
b. Give toxicity test methods followed.			
Manual title	Short-Term Methods For Estimating The Chronic Toxicity of Effluents and Receiving Water to Freshwater Organisms	Short-Term Methods For Estimating The Chronic Toxicity of Effluents and Receiving Water to Freshwater Organisms	Short-Term Methods For Estimating The Chronic Toxicity of Effluents and Receiving Water to Freshwater Organisms
Edition number and year of publication	Third Edition, July 1994	Third Edition, July 1994	Third Edition, July 1994
Page number(s)	144 - 189	144 - 189	144 - 189
c. Give the sample collection method(s) used. For multiple grab samples, indicate the number of grab samples used.			
24-Hour composite	Automatic Flow Composite	Automatic Flow Composite	Automatic Flow Composite
Grab			
d. Indicate where the sample was taken in relation to disinfection. (Check all that apply for each)			
Before disinfection			
After disinfection			
After dechlorination			
e. Describe the point in the treatment process at which the sample was collected.			
Sample was collected:	Downstream from all plant additions	Downstream from all plant additions	Downstream from all plant additions
f. For each test, include whether the test was intended to assess chronic toxicity, acute toxicity, or both.			
Chronic toxicity	✓	✓	✓
Acute toxicity			
g. Provide the type of test performed.			
Static			
Static-renewal	✓	✓	✓
Flow-through			
h. Source of dilution water. If laboratory water, specify type; if receiving water, specify source.			
Laboratory water	Synthetic Moderate Hard Water	Synthetic Moderate Hard Water	Synthetic Moderate Hard Water
Receiving water			
i. Type of dilution water. If salt water, specify "natural" or type of artificial sea salts or brine used.			
Fresh water	✓	✓	✓
Salt water			
j. Give the percentage effluent used for all concentrations in the test series.			
	0.00	0.00	0.00
	0.16	0.16	0.16
	0.32	0.32	0.32
	0.63	0.63	0.63
	1.26	1.26	1.26
	2.52	2.52	2.52

FACILITY NAME AND PERMIT NUMBER:	Honouliuli WWTP HI 0020877		Form Approved 1/14/99 OMB Number 2040-0086
	Test number: HO040902	Test number: HO051002	Test number: HO060302
k. Parameters measured during the test. (State whether parameter meets test method specifications)			
pH	Yes	Yes	Yes
Salinity	Yes	Yes	Yes
Temperature	Yes	Yes	Yes
Ammonia	Not measured	Not measured	Not measured
Dissolved oxygen	Yes	Yes	Yes
l. Test Results.			
Acute:			
Percent survival in 100% effluent	%	%	%
LC_{50}			
95% C.I.	%	%	%
Control percent survival	%	%	%
Other (describe)			
Chronic:			
NOEC REPRODUCTION	2.52 %	2.52 %	2.52 %
IC_{25}	%	%	%
Control percent survival	%	%	%
Other (describe) NOEC SURVIVAL	2.52 %	2.52 %	2.52 %
m. Quality Control/Quality Assurance.			
Is reference toxicant data available?	Yes	Yes	Yes
Was reference toxicant test within acceptable bounds?	Yes	Yes	Yes
What date was reference toxicant test run (MM/DD/YYYY)?	04/07/02	05/10/02	06/14/02
Other (describe)			

E.3. Toxicity Reduction Evaluation. Is the treatment works involved in a Toxicity Reduction Evaluation?

___Yes ✓ No If yes, describe: _____

FACILITY NAME AND PERMIT NUMBER:	Honouliuli WWTP HI 0020877		Form Approved 1/14/99 OMB Number 2040-0086
	Test number: HO07/01/02	Test number: HO08/01/02	Test number: HO09/02/02
a. Test information.			
Test species & test method number	C. dubia 1002.0	C. dubia 1002.0	C. dubia 1002.0
Age at initiation of test	< 24 hours	< 24 hours	< 24 hours
Outfall number	001	001	001
Dates sample collected	06/30/02 - 07/06/02	07/31/02 - 08/06/02	09/01/02 - 09/07/02
Date test started	07/01/02	08/01/02	09/02/02
Duration	6 days	6 days	6 days
b. Give toxicity test methods followed.			
Manual title	Short-Term Methods For Estimating The Chronic Toxicity of Effluents and Receiving Water to Freshwater Organisms	Short-Term Methods For Estimating The Chronic Toxicity of Effluents and Receiving Water to Freshwater Organisms	Short-Term Methods For Estimating The Chronic Toxicity of Effluents and Receiving Water to Freshwater Organisms
Edition number and year of publication	Third Edition, July 1994	Third Edition, July 1994	Third Edition, July 1994
Page number(s)	144 - 189	144 - 189	144 - 189
c. Give the sample collection method(s) used. For multiple grab samples, indicate the number of grab samples used.			
24-Hour composite	Automatic Flow Composite	Automatic Flow Composite	Automatic Flow Composite
Grab			
d. Indicate where the sample was taken in relation to disinfection. (Check all that apply for each)			
Before disinfection			
After disinfection			
After dechlorination			
e. Describe the point in the treatment process at which the sample was collected.			
Sample was collected:	Downstream from all plant additions	Downstream from all plant additions	Downstream from all plant additions
f. For each test, include whether the test was intended to assess chronic toxicity, acute toxicity, or both.			
Chronic toxicity	✓	✓	✓
Acute toxicity			
g. Provide the type of test performed.			
Static			
Static-renewal	✓	✓	✓
Flow-through			
h. Source of dilution water. If laboratory water, specify type; if receiving water, specify source.			
Laboratory water	Synthetic Moderate Hard Water	Synthetic Moderate Hard Water	Synthetic Moderate Hard Water
Receiving water			
i. Type of dilution water. If salt water, specify "natural" or type of artificial sea salts or brine used.			
Fresh water	✓	✓	✓
Salt water			
j. Give the percentage effluent used for all concentrations in the test series.			
	0.00	0.00	0.00
	0.16	0.16	0.16
	0.32	0.32	0.32
	0.63	0.63	0.63
	1.26	1.26	1.26
	2.52	2.52	2.52

FACILITY NAME AND PERMIT NUMBER:	Honouliuli WWTP HI 0020877		Form Approved 1/14/99 OMB Number 2040-0086
	Test number: HO07/01/02	Test number: HO08/01/02	Test number: HO09/02/02
k. Parameters measured during the test. (State whether parameter meets test method specifications)			
pH	Yes	Yes	Yes
Salinity	Yes	Yes	Yes
Temperature	Yes	Yes	Yes
Ammonia	Not measured	Not measured	Not measured
Dissolved oxygen	Yes	Yes	Yes
l. Test Results.			
Acute:			
Percent survival in 100% effluent	%	%	%
LC_{50}			
95% C.I.	%	%	%
Control percent survival	%	%	%
Other (describe)			
Chronic:			
NOEC REPRODUCTION	2.52 %	2.52 %	2.52 %
IC_{25}	%	%	%
Control percent survival	%	%	%
Other (describe) NOEC SURVIVAL	2.52 %	2.52 %	2.52 %
m. Quality Control/Quality Assurance.			
Is reference toxicant data available?	Yes	Yes	Yes
Was reference toxicant test within acceptable bounds?	Yes	Yes	Yes
What date was reference toxicant test run (MM/DD/YYYY)?	07/15/02	08/17/02	09/16/02
Other (describe)			

E.3. Toxicity Reduction Evaluation. Is the treatment works involved in a Toxicity Reduction Evaluation?

___Yes ✓ No If yes, describe: _____

FACILITY NAME AND PERMIT NUMBER: Honouliuli WWTP HI 0020877

Form Approved 1/14/99
OMB Number 2040-0086

	Test number: HO101302	Test number: HO112402	Test number: HO121902
a. Test information.			
Test species & test method number	C. dubia 1002.0	C. dubia 1002.0	C. dubia 1002.0
Age at initiation of test	< 24 hours	< 24 hours	< 24 hours
Outfall number	001	001	001
Dates sample collected	10/12/02 - 10/18/02	11/23/02 - 11/29/02	12/18/02 - 12/24/02
Date test started	10/13/02	11/24/02	12/19/02
Duration	6 days	6 days	6 days
b. Give toxicity test methods followed.			
Manual title	Short-Term Methods For Estimating The Chronic Toxicity of Effluents and Receiving Water to Freshwater Organisms	Short-Term Methods For Estimating The Chronic Toxicity of Effluents and Receiving Water to Freshwater Organisms	Short-Term Methods For Estimating The Chronic Toxicity of Effluents and Receiving Water to Freshwater Organisms
Edition number and year of publication	Third Edition, July 1994	Third Edition, July 1994	Third Edition, July 1994
Page number(s)	144 - 189	144 - 189	144 - 189
c. Give the sample collection method(s) used. For multiple grab samples, indicate the number of grab samples used.			
24-Hour composite	Automatic Flow Composite	Automatic Flow Composite	Automatic Flow Composite
Grab			
d. Indicate where the sample was taken in relation to disinfection. (Check all that apply for each)			
Before disinfection			
After disinfection			
After dechlorination			
e. Describe the point in the treatment process at which the sample was collected.			
Sample was collected:	Downstream from all plant additions	Downstream from all plant additions	Downstream from all plant additions
f. For each test, include whether the test was intended to assess chronic toxicity, acute toxicity, or both.			
Chronic toxicity	✓	✓	✓
Acute toxicity			
g. Provide the type of test performed.			
Static			
Static-renewal	✓	✓	✓
Flow-through			
h. Source of dilution water. If laboratory water, specify type; if receiving water, specify source.			
Laboratory water	Synthetic Moderate Hard Water	Synthetic Moderate Hard Water	Synthetic Moderate Hard Water
Receiving water			
i. Type of dilution water. If salt water, specify "natural" or type of artificial sea salts or brine used.			
Fresh water	✓	✓	✓
Salt water			
j. Give the percentage effluent used for all concentrations in the test series.			
	0.00 0.16	0.00 0.16	0.00 0.16
	0.32 0.63	0.32 0.63	0.32 0.63
	1.26 2.52	1.26 2.52	1.26 2.52

FACILITY NAME AND PERMIT NUMBER:	Honouliuli WWTP HI 0020877		Form Approved 1/14/99 OMB Number 2040-0086
	Test number: HO101302	Test number: HO112402	Test number: HO121902
k. Parameters measured during the test. (State whether parameter meets test method specifications)			
pH	Yes	Yes	Yes
Salinity	Yes	Yes	Yes
Temperature	Yes	Yes	Yes
Ammonia	Not measured	Not measured	Not measured
Dissolved oxygen	Yes	Yes	Yes
l. Test Results.			
Acute:			
Percent survival in 100% effluent	%	%	%
LC_{50}			
95% C.I.	%	%	%
Control percent survival	%	%	%
Other (describe)			
Chronic:			
NOEC REPRODUCTION	2.52 %	2.52 %	2.52 %
IC_{25}	%	%	%
Control percent survival	%	%	%
Other (describe) NOEC SURVIVAL	2.52 %	2.52 %	2.52 %
m. Quality Control/Quality Assurance.			
Is reference toxicant data available?	Yes	Yes	Yes
Was reference toxicant test within acceptable bounds?	Yes	Yes	Yes
What date was reference toxicant test run (MM/DD/YYYY)?	10/30/02	11/16/02	12/09/02
Other (describe)			

E.3. Toxicity Reduction Evaluation. Is the treatment works involved in a Toxicity Reduction Evaluation?

___Yes ✓ No If yes, describe: _____

FACILITY NAME AND PERMIT NUMBER:	Honouliuli WWTP HI 0020877		Form Approved 1/14/99 OMB Number 2040-0086
	Test number: HO010303	Test number: HO020703	Test number: HO032403
a. Test information.			
Test species & test method number	C. dubia 1002.0	C. dubia 1002.0	C. dubia 1002.0
Age at initiation of test	< 24 hours	< 24 hours	< 24 hours
Outfall number	001	001	001
Dates sample collected	01/02/03 -01/08/03	02/06/03 - 02/12/03	03/23/03 - 03/29/03
Date test started	01/03/03	02/07/03	03/24/03
Duration	6 days	6 days	6 days
b. Give toxicity test methods followed.			
Manual title	Short-Term Methods For Estimating The Chronic Toxicity of Effluents and Receiving Water to Freshwater Organisms	Short-Term Methods For Estimating The Chronic Toxicity of Effluents and Receiving Water to Freshwater Organisms	Short-Term Methods For Estimating The Chronic Toxicity of Effluents and Receiving Water to Freshwater Organisms
Edition number and year of publication	Third Edition, July 1994	Third Edition, July 1994	Third Edition, July 1994
Page number(s)	144 - 189	144 - 189	144 - 189
c. Give the sample collection method(s) used. For multiple grab samples, indicate the number of grab samples used.			
24-Hour composite	Automatic Flow Composite	Automatic Flow Composite	Automatic Flow Composite
Grab			
d. Indicate where the sample was taken in relation to disinfection. (Check all that apply for each)			
Before disinfection			
After disinfection			
After dechlorination			
e. Describe the point in the treatment process at which the sample was collected.			
Sample was collected:	Downstream from all plant additions	Downstream from all plant additions	Downstream from all plant additions
f. For each test, include whether the test was intended to assess chronic toxicity, acute toxicity, or both.			
Chronic toxicity	✓	✓	✓
Acute toxicity			
g. Provide the type of test performed.			
Static			
Static-renewal	✓	✓	✓
Flow-through			
h. Source of dilution water. If laboratory water, specify type; if receiving water, specify source.			
Laboratory water	Synthetic Moderate Hard Water	Synthetic Moderate Hard Water	Synthetic Moderate Hard Water
Receiving water			
i. Type of dilution water. If salt water, specify "natural" or type of artificial sea salts or brine used.			
Fresh water	✓	✓	✓
Salt water			
j. Give the percentage effluent used for all concentrations in the test series.			
	0.00	0.00	0.00
	0.16	0.16	0.16
	0.32	0.32	0.32
	0.63	0.63	0.63
	1.26	1.26	1.26
	2.52	2.52	2.52

FACILITY NAME AND PERMIT NUMBER:	Honouliuli WWTP HI 0020877		Form Approved 1/14/99 OMB Number 2040-0086
	Test number: HO010303	Test number: HO020703	Test number: HO032403
k. Parameters measured during the test. (State whether parameter meets test method specifications)			
pH	Yes	Yes	Yes
Salinity	Yes	Yes	Yes
Temperature	Yes	Yes	Yes
Ammonia	Not measured	Not measured	Not measured
Dissolved oxygen	Yes	Yes	Yes
l. Test Results.			
Acute:			
Percent survival in 100% effluent	%	%	%
LC_{50}			
95% C.I.	%	%	%
Control percent survival	%	%	%
Other (describe)			
Chronic:			
NOEC REPRODUCTION	2.52 %	2.52 %	2.52 %
IC_{25}	%	%	%
Control percent survival	%	%	%
Other (describe) NOEC SURVIVAL	2.52 %	2.52 %	2.52 %
m. Quality Control/Quality Assurance.			
Is reference toxicant data available?	Yes	Yes	Yes
Was reference toxicant test within acceptable bounds?	Yes	Yes	Yes
What date was reference toxicant test run (MM/DD/YYYY)?	01/24/03	02/01/03	03/04/03
Other (describe)			

E.3. Toxicity Reduction Evaluation. Is the treatment works involved in a Toxicity Reduction Evaluation?

____Yes ✓ No If yes, describe: _____

FACILITY NAME AND PERMIT NUMBER: **Honouliuli WWTP** HI 0020877

Form Approved 1/14/99
OMB Number 2040-0086

	Test number: HO042303	Test number: HO052503	Test number: HO062303
a. Test information.			
Test species & test method number	C. dubia 1002.0	C. dubia 1002.0	C. dubia 1002.0
Age at initiation of test	< 24 hours	< 24 hours	< 24 hours
Outfall number	001	001	001
Dates sample collected	04/22/03 - 04/28/03	05/24/03 - 05/30/03	06/22/03 - 06/28/03
Date test started	04/23/03	05/25/03	06/23/03
Duration	6 days	6 days	6 days
b. Give toxicity test methods followed.			
Manual title	Short-Term Methods For Estimating The Chronic Toxicity of Effluents and Receiving Water to Freshwater Organisms	Short-Term Methods For Estimating The Chronic Toxicity of Effluents and Receiving Water to Freshwater Organisms	Short-Term Methods For Estimating The Chronic Toxicity of Effluents and Receiving Water to Freshwater Organisms
Edition number and year of publication	Third Edition, July 1994	Third Edition, July 1994	Third Edition, July 1994
Page number(s)	144 - 189	144 - 189	144 - 189
c. Give the sample collection method(s) used. For multiple grab samples, indicate the number of grab samples used.			
24-Hour composite	Automatic Flow Composite	Automatic Flow Composite	Automatic Flow Composite
Grab			
d. Indicate where the sample was taken in relation to disinfection. (Check all that apply for each)			
Before disinfection			
After disinfection			
After dechlorination			
e. Describe the point in the treatment process at which the sample was collected.			
Sample was collected:	Downstream from all plant additions	Downstream from all plant additions	Downstream from all plant additions
f. For each test, include whether the test was intended to assess chronic toxicity, acute toxicity, or both.			
Chronic toxicity	✓	✓	✓
Acute toxicity			
g. Provide the type of test performed.			
Static			
Static-renewal	✓	✓	✓
Flow-through			
h. Source of dilution water. If laboratory water, specify type; if receiving water, specify source.			
Laboratory water	Synthetic Moderate Hard Water	Synthetic Moderate Hard Water	Synthetic Moderate Hard Water
Receiving water			
i. Type of dilution water. If salt water, specify "natural" or type of artificial sea salts or brine used.			
Fresh water	✓	✓	✓
Salt water			
j. Give the percentage effluent used for all concentrations in the test series.			
	0.00	0.00	0.00
	0.16	0.16	0.16
	0.32	0.32	0.32
	0.63	0.63	0.63
	1.26	1.26	1.26
	2.52	2.52	2.52

FACILITY NAME AND PERMIT NUMBER:	Honouliuli WWTP HI 0020877		Form Approved 1/14/99 OMB Number 2040-0086
	Test number: HO042303	Test number: HO052503	Test number: HO062303
k. Parameters measured during the test. (State whether parameter meets test method specifications)			
pH	Yes	Yes	Yes
Salinity	Yes	Yes	Yes
Temperature	Yes	Yes	Yes
Ammonia	Not measured	Not measured	Not measured
Dissolved oxygen	Yes	Yes	Yes
l. Test Results.			
Acute:			
Percent survival in 100% effluent	%	%	%
LC_{50}			
95% C.I.	%	%	%
Control percent survival	%	%	%
Other (describe)			
Chronic:			
NOEC REPRODUCTION	2.52 %	2.52 %	2.52 %
IC_{25}	%	%	%
Control percent survival	%	%	%
Other (describe) NOEC SURVIVAL	2.52 %	2.52 %	2.52 %
m. Quality Control/Quality Assurance.			
Is reference toxicant data available?	Yes	Yes	Yes
Was reference toxicant test within acceptable bounds?	Yes	Yes	Yes
What date was reference toxicant test run (MM/DD/YYYY)?	04/02/03	05/05/03	06/02/03
Other (describe)			

E.3. Toxicity Reduction Evaluation. Is the treatment works involved in a Toxicity Reduction Evaluation?

___Yes ✓ No If yes, describe: _____

FACILITY NAME AND PERMIT NUMBER: Honouliuli WWTP
HI 0020877

Form Approved 1/14/99
OMB Number 2040-0086

	Test number: HO072603	Test number: HO082303	Test number: HO090803
a. Test information.			
Test species & test method number	C. dubia 1002.0	C. dubia 1002.0	C. dubia 1002.0
Age at initiation of test	< 24 hours	< 24 hours	< 24 hours
Outfall number	001	001	001
Dates sample collected	07/25/03 - 07/31/03	08/22/03 - 08/27/03	09/07/03 - 09/13/03
Date test started	07/26/03	08/23/03	09/08/03
Duration	6 days	5 days	6 days
b. Give toxicity test methods followed.			
Manual title	Short-Term Methods For Estimating The Chronic Toxicity of Effluents and Receiving Water to Freshwater Organisms	Short-Term Methods For Estimating The Chronic Toxicity of Effluents and Receiving Water to Freshwater Organisms	Short-Term Methods For Estimating The Chronic Toxicity of Effluents and Receiving Water to Freshwater Organisms
Edition number and year of publication	Third Edition, July 1994	Third Edition, July 1994	Third Edition, July 1994
Page number(s)	144 - 189	144 - 189	144 - 189
c. Give the sample collection method(s) used. For multiple grab samples, indicate the number of grab samples used.			
24-Hour composite	Automatic Flow Composite	Automatic Flow Composite	Automatic Flow Composite
Grab			
d. Indicate where the sample was taken in relation to disinfection. (Check all that apply for each)			
Before disinfection			
After disinfection			
After dechlorination			
e. Describe the point in the treatment process at which the sample was collected.			
Sample was collected:	Downstream from all plant additions	Downstream from all plant additions	Downstream from all plant additions
f. For each test, include whether the test was intended to assess chronic toxicity, acute toxicity, or both.			
Chronic toxicity	✓	✓	✓
Acute toxicity			
g. Provide the type of test performed.			
Static			
Static-renewal	✓	✓	✓
Flow-through			
h. Source of dilution water. If laboratory water, specify type; if receiving water, specify source.			
Laboratory water	Synthetic Moderate Hard Water	Synthetic Moderate Hard Water	Synthetic Moderate Hard Water
Receiving water			
i. Type of dilution water. If salt water, specify "natural" or type of artificial sea salts or brine used.			
Fresh water	✓	✓	✓
Salt water			
j. Give the percentage effluent used for all concentrations in the test series.			
	0.00	0.00	0.00
	0.16	0.16	0.16
	0.32	0.32	0.32
	0.63	0.63	0.63
	1.26	1.26	1.26
	2.52	2.52	2.52

FACILITY NAME AND PERMIT NUMBER:	Honouliuli WWTP HI 0020877		Form Approved 1/14/99 OMB Number 2040-0086
	Test number: HO072603	Test number: HO082303	Test number: HO090803
k. Parameters measured during the test. (State whether parameter meets test method specifications)			
pH	Yes	Yes	Yes
Salinity	Yes	Yes	Yes
Temperature	Yes	Yes	Yes
Ammonia	Not measured	Not measured	Not measured
Dissolved oxygen	Yes	Yes	Yes
l. Test Results.			
Acute:			
Percent survival in 100% effluent	%	%	%
LC_{50}			
95% C.I.	%	%	%
Control percent survival	%	%	%
Other (describe)			
Chronic:			
NOEC REPRODUCTION	2.52 %	2.52 %	2.52 %
IC_{25}	%	%	%
Control percent survival	%	%	%
Other (describe) NOEC SURVIVAL	2.52 %	2.52 %	2.52 %
m. Quality Control/Quality Assurance.			
Is reference toxicant data available?	Yes	Yes	Yes
Was reference toxicant test within acceptable bounds?	Yes	Yes	Yes
What date was reference toxicant test run (MM/DD/YYYY)?	07/06/03	08/02/03	09/01/03
Other (describe)			

E.3. Toxicity Reduction Evaluation. Is the treatment works involved in a Toxicity Reduction Evaluation?

___Yes ✓ No If yes, describe: _____

FACILITY NAME AND PERMIT NUMBER: **Honouliuli WWTP** HI 0020877

Form Approved 1/14/99
OMB Number 2040-0086

	Test number: HO100803	Test number: HO110803	Test number: HOI120803
a. Test information.			
Test species & test method number	C. dubia 1002.0	C. dubia 1002.0	C. dubia 1002.0
Age at initiation of test	< 24 hours	< 24 hours	< 24 hours
Outfall number	001	001	001
Dates sample collected	10/07/03 - 10/13/03	11/07/03 - 11/13/03	12/07/03 - 12/13/03
Date test started	10/08/03	11/08/03	12/08/03
Duration	6 days	6 days	6 days
b. Give toxicity test methods followed.			
Manual title	Short-Term Methods For Estimating The Chronic Toxicity of Effluents and Receiving Water to Freshwater Organisms	Short-Term Methods For Estimating The Chronic Toxicity of Effluents and Receiving Water to Freshwater Organisms	Short-Term Methods For Estimating The Chronic Toxicity of Effluents and Receiving Water to Freshwater Organisms
Edition number and year of publication	Third Edition, July 1994	Third Edition, July 1994	Third Edition, July 1994
Page number(s)	144 - 189	144 - 189	144 - 189
c. Give the sample collection method(s) used. For multiple grab samples, indicate the number of grab samples used.			
24-Hour composite	Automatic Flow Composite	Automatic Flow Composite	Automatic Flow Composite
Grab			
d. Indicate where the sample was taken in relation to disinfection. (Check all that apply for each)			
Before disinfection			
After disinfection			
After dechlorination			
e. Describe the point in the treatment process at which the sample was collected.			
Sample was collected:	Downstream from all plant additions	Downstream from all plant additions	Downstream from all plant additions
f. For each test, include whether the test was intended to assess chronic toxicity, acute toxicity, or both.			
Chronic toxicity	✓	✓	✓
Acute toxicity			
g. Provide the type of test performed.			
Static			
Static-renewal	✓	✓	✓
Flow-through			
h. Source of dilution water. If laboratory water, specify type; if receiving water, specify source.			
Laboratory water	Synthetic Moderate Hard Water	Synthetic Moderate Hard Water	Synthetic Moderate Hard Water
Receiving water			
i. Type of dilution water. If salt water, specify "natural" or type of artificial sea salts or brine used.			
Fresh water	✓	✓	✓
Salt water			
j. Give the percentage effluent used for all concentrations in the test series.			
	0.00	0.00	0.00
	0.16	0.16	0.16
	0.32	0.32	0.32
	0.63	0.63	0.63
	1.26	1.26	1.26
	2.52	2.52	2.52

FACILITY NAME AND PERMIT NUMBER:	Honouliuli WWTP HI 0020877		Form Approved 1/14/99 OMB Number 2040-0086
	Test number: HO100803	Test number: HO110803	Test number: HOI120803
k. Parameters measured during the test. (State whether parameter meets test method specifications)			
pH	Yes	Yes	Yes
Salinity	Yes	Yes	Yes
Temperature	Yes	Yes	Yes
Ammonia	Not measured	Not measured	Not measured
Dissolved oxygen	Yes	Yes	Yes
l. Test Results.			
Acute:			
Percent survival in 100% effluent	%	%	%
LC_{50}			
95% C.I.	%	%	%
Control percent survival	%	%	%
Other (describe)			
Chronic:			
NOEC REPRODUCTION	2.52 %	2.52 %	2.52 %
IC_{25}	%	%	%
Control percent survival	%	%	%
Other (describe) NOEC SURVIVAL	2.52 %	2.52 %	2.52 %
m. Quality Control/Quality Assurance.			
Is reference toxicant data available?	Yes	Yes	Yes
Was reference toxicant test within acceptable bounds?	Yes	Yes	Yes
What date was reference toxicant test run (MM/DD/YYYY)?	10/02/03	11/01/03	12/01/03
Other (describe)			

E.3. Toxicity Reduction Evaluation. Is the treatment works involved in a Toxicity Reduction Evaluation?

___Yes ✓ No If yes, describe: _____

FACILITY NAME AND PERMIT NUMBER: Honouliuli WWTP HI 0020877

Form Approved 1/14/99
OMB Number 2040-0086

	Test number: HO011904	Test number: HO021504	Test number: HO030804
a. Test information.			
Test species & test method number	C. dubia 1002.0	C. dubia 1002.0	C. dubia 1002.0
Age at initiation of test	< 24 hours	< 24 hours	< 24 hours
Outfall number	001	001	001
Dates sample collected	01/18/04 - 01/24/04	02/14/04 - 02/20/04	03/07/04 - 03/14/04
Date test started	01/19/04	02/15/04	03/08/04
Duration	6 days	6 days	7 days
b. Give toxicity test methods followed.			
Manual title	Short-Term Methods For Estimating The Chronic Toxicity of Effluents and Receiving Water to Freshwater Organisms	Short-Term Methods For Estimating The Chronic Toxicity of Effluents and Receiving Water to Freshwater Organisms	Short-Term Methods For Estimating The Chronic Toxicity of Effluents and Receiving Water to Freshwater Organisms
Edition number and year of publication	Third Edition, July 1994	Third Edition, July 1994	Third Edition, July 1994
Page number(s)	144 - 189	144 - 189	144 - 189
c. Give the sample collection method(s) used. For multiple grab samples, indicate the number of grab samples used.			
24-Hour composite	Automatic Flow Composite	Automatic Flow Composite	Automatic Flow Composite
Grab			
d. Indicate where the sample was taken in relation to disinfection. (Check all that apply for each)			
Before disinfection			
After disinfection			
After dechlorination			
e. Describe the point in the treatment process at which the sample was collected.			
Sample was collected:	Downstream from all plant additions	Downstream from all plant additions	Downstream from all plant additions
f. For each test, include whether the test was intended to assess chronic toxicity, acute toxicity, or both.			
Chronic toxicity	✓	✓	✓
Acute toxicity			
g. Provide the type of test performed.			
Static			
Static-renewal	✓	✓	✓
Flow-through			
h. Source of dilution water. If laboratory water, specify type; if receiving water, specify source.			
Laboratory water	Synthetic Moderate Hard Water	Synthetic Moderate Hard Water	Synthetic Moderate Hard Water
Receiving water			
i. Type of dilution water. If salt water, specify "natural" or type of artificial sea salts or brine used.			
Fresh water	✓	✓	✓
Salt water			
j. Give the percentage effluent used for all concentrations in the test series.			
	0.00	0.00	0.00
	0.16	0.16	0.16
	0.32	0.32	0.32
	0.63	0.63	0.63
	1.26	1.26	1.26
	2.52	2.52	2.52

FACILITY NAME AND PERMIT NUMBER:	Honouliuli WWTP HI 0020877		Form Approved 1/14/99 OMB Number 2040-0086
	Test number: HO011904	Test number: HO021504	Test number: HO030804
k. Parameters measured during the test. (State whether parameter meets test method specifications)			
pH	Yes	Yes	Yes
Salinity	Yes	Yes	Yes
Temperature	Yes	Yes	Yes
Ammonia	Not measured	Not measured	Not measured
Dissolved oxygen	Yes	Yes	Yes
l. Test Results.			
Acute:			
Percent survival in 100% effluent	%	%	%
LC_{50}			
95% C.I.	%	%	%
Control percent survival	%	%	%
Other (describe)			
Chronic:			
NOEC REPRODUCTION	2.52 %	2.52 %	2.52 %
IC_{25}	%	%	%
Control percent survival	%	%	%
Other (describe) NOEC SURVIVAL	2.52 %	2.52 %	2.52 %
m. Quality Control/Quality Assurance.			
Is reference toxicant data available?	Yes	Yes	Yes
Was reference toxicant test within acceptable bounds?	Yes	Yes	Yes
What date was reference toxicant test run (MM/DD/YYYY)?	01/05/04	02/02/04	03/01/04
Other (describe)			

E.3. Toxicity Reduction Evaluation. Is the treatment works involved in a Toxicity Reduction Evaluation?

___Yes ✓ No If yes, describe: _____

FACILITY NAME AND PERMIT NUMBER: Honouliuli WWTP HI 0020877

Form Approved 1/14/99
OMB Number 2040-0086

	Test number: HO041504	Test number: HO051704	Test number: HO060804
a. Test information.			
Test species & test method number	C. dubia 1002.0	C. dubia 1002.0	C. dubia 1002.0
Age at initiation of test	< 24 hours	< 24 hours	< 24 hours
Outfall number	001	001	001
Dates sample collected	04/14/04 - 04/20/04	05/16/04 -05/22/04	06/07/04 - 06/13/04
Date test started	04/15/04	05/17/04	06/08/04
Duration	6 days	6 days	6 days
b. Give toxicity test methods followed.			
Manual title	Short-Term Methods For Estimating The Chronic Toxicity of Effluents and Receiving Water to Freshwater Organisms	Short-Term Methods For Estimating The Chronic Toxicity of Effluents and Receiving Water to Freshwater Organisms	Short-Term Methods For Estimating The Chronic Toxicity of Effluents and Receiving Water to Freshwater Organisms
Edition number and year of publication	Third Edition, July 1994	Third Edition, July 1994	Third Edition, July 1994
Page number(s)	144 - 189	144 - 189	144 - 189
c. Give the sample collection method(s) used. For multiple grab samples, indicate the number of grab samples used.			
24-Hour composite	Automatic Flow Composite	Automatic Flow Composite	Automatic Flow Composite
Grab			
d. Indicate where the sample was taken in relation to disinfection. (Check all that apply for each)			
Before disinfection			
After disinfection			
After dechlorination			
e. Describe the point in the treatment process at which the sample was collected.			
Sample was collected:	Downstream from all plant additions	Downstream from all plant additions	Downstream from all plant additions
f. For each test, include whether the test was intended to assess chronic toxicity, acute toxicity, or both.			
Chronic toxicity	✓	✓	✓
Acute toxicity			
g. Provide the type of test performed.			
Static			
Static-renewal	✓	✓	✓
Flow-through			
h. Source of dilution water. If laboratory water, specify type; if receiving water, specify source.			
Laboratory water	Synthetic Moderate Hard Water	Synthetic Moderate Hard Water	Synthetic Moderate Hard Water
Receiving water			
i. Type of dilution water. If salt water, specify "natural" or type of artificial sea salts or brine used.			
Fresh water	✓	✓	✓
Salt water			
j. Give the percentage effluent used for all concentrations in the test series.			
	0.00	0.00	0.00
	0.16	0.16	0.16
	0.32	0.32	0.32
	0.63	0.63	0.63
	1.26	1.26	1.26
	2.52	2.52	2.52

FACILITY NAME AND PERMIT NUMBER:	Honouliuli WWTP HI 0020877		Form Approved 1/14/99 OMB Number 2040-0086
	Test number: HO041504	Test number: HO051704	Test number: HO060804
k. Parameters measured during the test. (State whether parameter meets test method specifications)			
pH	Yes	Yes	Yes
Salinity	Yes	Yes	Yes
Temperature	Yes	Yes	Yes
Ammonia	Not measured	Not measured	Not measured
Dissolved oxygen	Yes	Yes	Yes
l. Test Results.			
Acute:			
Percent survival in 100% effluent	%	%	%
LC_{50}			
95% C.I.	%	%	%
Control percent survival	%	%	%
Other (describe)			
Chronic:			
NOEC REPRODUCTION	2.52 %	2.52 %	2.52 %
IC_{25}	%	%	%
Control percent survival	%	%	%
Other (describe) NOEC SURVIVAL	2.52 %	2.52 %	2.52 %
m. Quality Control/Quality Assurance.			
Is reference toxicant data available?	Yes	Yes	Yes
Was reference toxicant test within acceptable bounds?	Yes	Yes	Yes
What date was reference toxicant test run (MM/DD/YYYY)?	04/02/04	05/03/04	06/02/04
Other (describe)			

E.3. Toxicity Reduction Evaluation. Is the treatment works involved in a Toxicity Reduction Evaluation?

___Yes ✓ No If yes, describe: _____

E.4. Summary of Submitted Biomonitoring Test Information. If you have submitted biomonitoring test information, or information regarding the cause of toxicity, within the past four and one-half years, provide the dates the information was submitted to the permitting authority and a summary of the results.

Date submitted: _____ (MM/DD/YYYY)

Summary of results: (see instructions)

In the past four and one-half years, no toxicity was detected in the effluent samples using the 7-day *Ceriodaphnia dubia* Survival and Reproduction method.

END OF PART E.

REFER TO THE APPLICATION OVERVIEW TO DETERMINE WHICH OTHER PARTS OF FORM 2A YOU MUST COMPLETE.

SUPPLEMENTAL APPLICATION INFORMATION

PART F. INDUSTRIAL USER DISCHARGES AND RCRA/CERCLA WASTES

All treatment works receiving discharges from significant industrial users or which receive RCRA, CERCLA, or other remedial wastes must complete Part F.

GENERAL INFORMATION:

F.1. Pretreatment Program. Does the treatment works have, or is it subject to, an approved pretreatment program?

__X__ Yes _____ No

F.2. Significant Industrial Users (SIUs) and Categorical Industrial Users (CIUs). Provide the number of each of the following types of industrial users that discharge to the treatment works.

a. Number of non-categorical SIUs. __3__

b. Number of CIUs. __0__

SIGNIFICANT INDUSTRIAL USER INFORMATION:

Supply the following information for each SIU. If more than one SIU discharges to the treatment woks, copy question F.3 through F.8 and provide the information requested for each SIU.

F.3. Significant Industrial User Information. Provide the name and address of each SIU discharging to the treatment works. Submit additional pages as necessary.

Name: Frito-Lay of Hawaii, Inc.

Mailing Address: 99-1260 Iwaena Street Aiea, HI 96701

F.4. Industrial Processes. Describe all the industrial processes that affect or contribute to the SIU's discharge.

Processes snack foods for commercial sales.

F.5. Principal Product(s) and Raw Material(s). Describe all of the principal processes and raw materials that affect or contribute to the SIU's discharge.

Principal product(s) Snack foods.

Raw material(s) Grain meal, flour, and oil.

F.6. Flow Rate.

a. Process wastewater flow rate. Indicate the average daily volume of process wastewater discharged into the collection system in gallons per day (gpd) and whether the discharge is continuous or intermittent.

58,000.00 gpd (X continuous or __ intermittent)

b. Non-process wastewater flow rate. Indicate the average daily volume of non-process wastewater flow discharged into the collection system in gallons per day (gpd) and whether the discharge is continuous or intermittent.

9,000.00 gpd (X continuous or __ intermittent)

F.7. Pretreatment Standards. Indicate whether the SIU is subject to the following:

a. Local limits __X__ Yes _____ No

b. Categorical pretreatment standards _____ Yes X No

If subject to categorical pretreatment standards, which category and subcategory?

F.8. Problems at the Treatment Works Attributed to Waste Discharged by the SIU. has the SIU caused or contributed to any problems (e.g., upsets, interference) at the treatment works in the past three years?

_____ Yes X No

If yes, describe each episode.

F.3. Significant Industrial User Information. Provide the name and address of each SIU discharging to the treatment works. Submit additional pages as necessary.

Name: Honolulu Advertiser

Mailing Address: 4545 Kapolei Parkway Kapolei, HI 96707

F.4. Industrial Processes. Describe all the industrial processes that affect or contribute to the SIU's discharge.

Prints daily newspaper. New facility begins production in August 2004. Flows are estimated by discharger.

F.5. Principal Product(s) and Raw Material(s). Describe all of the principal processes and raw materials that affect or contribute to the SIU's discharge.

Principal product(s) Daily newspaper.

Raw material(s) Paper, printing ink and cleaners.

F.6. Flow Rate.

a. Process wastewater flow rate. Indicate the average daily volume of process wastewater discharged into the collection system in gallons per day (gpd) and whether the discharge is continuous or intermittent.

15,300.00 gpd (X continuous or ___ intermittent)

Estimated Flows.

b. Non-process wastewater flow rate. Indicate the average daily volume of non-process wastewater flow discharged into the collection system in gallons per day (gpd) and whether the discharge is continuous or intermittent.

1,700.00 gpd (X continuous or ___ intermittent)

Estimated Flows.

F.7. Pretreatment Standards. Indicate whether the SIU is subject to the following:

a. Local limits X Yes ___ No

b. Categorical pretreatment standards ___ Yes X No

If subject to categorical pretreatment standards, which category and subcategory?

F.8. Problems at the Treatment Works Attributed to Waste Discharged by the SIU. has the SIU caused or contributed to any problems (e.g., upsets, interference) at the treatment works in the past three years?

___ Yes X No

If yes, describe each episode.

F.3. Significant Industrial User Information. Provide the name and address of each SIU discharging to the treatment works. Submit additional pages as necessary.

Name: Pepsi Cola Company

Mailing Address: 99-1325 Halawa Valley Street Halawa, HI 96701

F.4. Industrial Processes. Describe all the industrial processes that affect or contribute to the SIU's discharge.

Processes soft drinks for commercial sales.

F.5. Principal Product(s) and Raw Material(s). Describe all of the principal processes and raw materials that affect or contribute to the SIU's discharge.

Principal product(s) Soft drinks.

Raw material(s) Syrup concentrate and carbonated water.

F.6. Flow Rate.

a. Process wastewater flow rate. Indicate the average daily volume of process wastewater discharged into the collection system in gallons per day (gpd) and whether the discharge is continuous or intermittent.

15,000.00 gpd (X continuous or ___ intermittent)

b. Non-process wastewater flow rate. Indicate the average daily volume of non-process wastewater flow discharged into the collection system in gallons per day (gpd) and whether the discharge is continuous or intermittent.

4,000.00 gpd (X continuous or ___ intermittent)

F.7. Pretreatment Standards. Indicate whether the SIU is subject to the following:

a. Local limits X Yes ___ No

b. Categorical pretreatment standards ___ Yes X No

If subject to categorical pretreatment standards, which category and subcategory?

F.8. Problems at the Treatment Works Attributed to Waste Discharged by the SIU. has the SIU caused or contributed to any problems (e.g., upsets, interference) at the treatment works in the past three years?

___ Yes X No

If yes, describe each episode.

RCRA HAZARDOUS WASTE RECEIVED BY TRUCK, RAIL, OR DEDICATED PIPELINE:

F.9. **RCRA Waste.** Does the treatment works receive or has it in the past three years received RCRA hazardous waste by truck, rail, or dedicated pipe?

_____ Yes __X__ No (go to F.12.)

F.10. **Waste Transport.** Method by which RCRA waste is received (check all that apply):

_____ Truck _____ Rail _____ Dedicated Pipe

F.11. **Waste Description.** Give EPA hazardous waste number and amount (volume or mass, specify units).

EPA Hazardous Waste Number	Amount	Units

CERCLA (SUPERFUND) WASTEWATER, RCRA REMEDIATION/CORRECTIVE ACTION WASTEWATER, AND OTHER REMEDIAL ACTIVITY WASTEWATER:

F.12. **Remediation Waste.** Does the treatment works currently (or has it been notified that it will) receive waste from remedial activities?

_____ Yes (complete F.13 through F.15. X_____ No

Provide a list of sites and the requested information (F.13. - F.15.) for each current and future site.

END OF PART F.
REFER TO THE APPLICATION OVERVIEW TO DETERMINE WHICH OTHER PARTS OF FORM 2A YOU MUST COMPLETE

FACILITY NAME AND PERMIT NUMBER:

Honouliuli Wastewater Treatment Plant HI0020877

Form Approved 1/14/99
OMB Number 2040-0086

PART 2: PERMIT APPLICATION INFORMATION

Complete this part if you have an effective NPDES permit or have been directed by the permitting authority to submit a full permit application at this time. In other words, complete this part if your facility has, or is applying for, an NPDES permit.

For purposes of this form, the term "you" refers to the applicant. "This facility" and "your facility" refer to the facility for which application information is submitted.

APPLICATION OVERVIEW - SEWAGE SLUDGE USE OR DISPOSAL INFORMATION

Part 2 is divided into five sections (A-E). Section A pertains to all applicants. The applicability of Sections B, C, D, and E depends on your facility's sewage sludge use or disposal practices. The information provided on this page indicates which sections of Part 2 to fill out.

1. SECTION A: GENERAL INFORMATION

Section A must be completed by all

2. SECTION B: GENERATION OF SEWAGE SLUDGE OR PREPARATION OF A MATERIAL DERIVED FROM SEWAGE SLUDGE

Section B must be completed by applicants who either:

1) Generate sewage sludge, or
2) Derive a material from sewage sludge

3. SECTION C: LAND APPLICATION OF BULK SEWAGE SLUDGE

Section C must be completed by applicants who either:

1) Apply sewage to the land, or
2) Generate sewage sludge which is applied to the land by others

NOTE: Applicants who meet either or both of the two above criteria are exempted from this requirement if all sewage sludge from their facility falls into one of the following three categories:

1) The sewage sludge from this facility meets the ceiling and pollutant concentrations, Class A pathogen reduction requirements, and one of vector attraction reduction options 1-8, as identified in the instructions, or
2) The sewage sludge from this facility is placed in a bag or other container for sale or give-away for application to the land, or
3) The sewage sludge from this facility is sent to another facility for treatment or blending.

4. SECTION D: SURFACE DISPOSAL

Section D must be completed by applicants who own or operate a surface disposal site.

5. SECTION E: INCINERATION

Section E must be completed by applicants who own or operate a sewage sludge incinerator.

FACILITY NAME AND PERMIT NUMBER:
Honouliuli Wastewater Treatment Plant HI0020877

Form Approved 1/14/99
OMB Number 2040-0086

A. GENERAL INFORMATION

All applicants must complete this section.

A.1. Facility Information

a. Facility Name: Honouliuli Wastewater Treatment Plant

b. Mailing Address: 1000 Uluohia Street, Suite 308
Kapolei, HI 96707

c. Contact Person: Frank J. Doyle, P.E.
Title: Director
Telephone Number: (808) 692-5159

d. Facility Address (not PO Box): 91-1501 Geiger Road
Ewa Beach, HI 96706

e. Is this facility a Class I sludge management facility? ____ Yes X No

f. Facility design flow rate: 38 mgd

g. Total population served: 336,448

e. Indicate the type of facility

X Publicly owned treatment works (POTW)
____ Privately owned treatment works
____ Federally owned treatment works
____ Blending or treatment operation
____ Surface disposal site
____ Sewage sludge incinerator
____ Other (describe) ____

A.2. Applicant Information If the applicant is different from above, provide the following:

a. Applicant Name: City and County of Honolulu

b. Mailing Address: 1000 Uluohia Street, Suite 308
Kapolei, HI 96707

c. Contact Person: Frank J. Doyle, P.E.
Title: Director
Telephone Number: (808) 692-5159

d. Is the applicant the owner and operator (or both) of this facility?

X Owner X Operator

e. Should correspondence regarding this permit be directed to the facility or the applicant?

____ Facility X Applicant

A.3. Permit Information

a. Facility's NPDES permit number (if applicable): HI0020877

b. List, on this form or an attachment, all other Federal, State, and local permits or construction approvals received or applied for that regulate this facility's sewage sludge management practices:

Permit Number	Type of Permit

A.4. Indian Country. Does any generation, treatment storage, application to the land, or disposal of sewage sludge from this facility occur in Indian Country?

_____ Yes X No

If yes, describe:

A.5. Topographic Map. Provide a topographic map or maps (or other appropriate map(s) if a topographic map is unavailable) that show the following information. Map(s) should include the area one mile beyond all property boundaries of the facility: (Map and Drawings are attached.)

a. Location of all sewage sludge management facilities, including locations where sewage sludge is stored, treated, or disposed.

b. Location of all wells, springs, and other surface water bodies, listed in public records or otherwise known to the applicant within 1/4 mile of the facility property boundaries.

A.6. Line Drawing. Provide a line drawing and/or a narrative description that identifies all sewage sludge processes that will be employed during the term of the permit, including all processes used for collecting, dewatering, storing, or treating sewage sludge, the destination(s) of all liquids and solids leaving each unit, and all methods used for pathogen reduction and vector attraction reduction.

A.7. Contractor Information. Are any operational or maintenance aspects of this facility related to sewage sludge generation, treatment, use or disposal the responsibility of a contractor?

_____ Yes X No

A.8. Pollution Concentrations: Using the table below or a separate attachment, provide sewage sludge monitoring data for the pollutants for which limits in sewage sludge have been established in 40 CFR Part 503 for this facility's expected use or disposal practices. All data must be based on three or more samples taken at least one month apart and must be no more than four and one-half years old.

POLLUTANT	CONCENTRATION (mg/kg dry weight)	ANALYTICAL METHOD	DETECTION LEVEL FOR ANALYSIS
ARSENIC	0.64	ICP/AES	PQL: 0.22 mg/Kg
CADMIUM	0.94	ICP/AES	PQL: 0.02 mg/Kg
CHROMIUM	28	ICP/AES	PQL: 0.05 mg/Kg
COPPER	304	ICP/AES	PQL: 0.11 mg/Kg
LEAD	14.5	ICP/AES	PQL: 0.07 mg/Kg
MERCURY	1.6	ICP/AES	PQL: 0.04 mg/Kg
MOLYBDENUM	4.8	ICP/AES	PQL: 0.07 mg/Kg
NICKEL	14.3	ICP/AES	PQL: 0.12 mg/Kg
SELENIUM	4.4	ICP/AES	PQL: 0.18 mg/Kg
ZINC	526	ICP/AES	PQL: 1.16 mg/Kg

FACILITY NAME AND PERMIT NUMBER:

Honouliuli Wastewater Treatment Plant HI0020877

Form Approved 1/14/99
OMB Number 2040-0086

A.9. Certification. Read and submit the following certification statement with this application. Refer to the instructions to determine who is an officer for purposes of this certification. Indicate which parts of Form 2S you have completed and are submitting:

_____ Part 1 Limited Background Information Packet	X Section A (General Information)
	X Section B (Generation of Sewage Sludge or Preparation of a Material Derived from Sewage Sludge)
	_____ Section C (Land Application of Bulk Sewage Sludge)
	_____ Section D (Surface Disposal)
	_____ Section E (Incineration)

I certify under penalty of law that this document and all attachments were prepared under my direction or supervision in accordance with the system designed to assure that qualified personnel properly gather and evaluate the information submitted. Based on my inquiry of the person or persons who manage the system or those persons directly responsible for gathering the information, the information is, to the best of my knowledge and belief, true, accurate, and complete. I am aware that there are significant penalties for submitting false information, including the possibility of fine and imprisonment for knowing violations.

Name and official title Frank J. Doyle, P.E. (Director)

Signature Frank J. Doyle Date Signed 8/30/04

Telephone number (808) 692-5159

Upon request of the permitting authority, you must submit any other information necessary to assess sewage sludge use or disposal practices at your facility or identify appropriate permitting requirements.

HONOULIULI WASTEWATER TREATMENT FACILITY
NPDES PERMIT NO. HI0020877

FORM 2S
PART 2: PERMIT APPLICATION INFORMATION
SECTION A: GENERAL INFORMATION.

A Topographic Map, including area one mile beyond all property boundaries, and Line Drawing, including plant processing units, are provided.

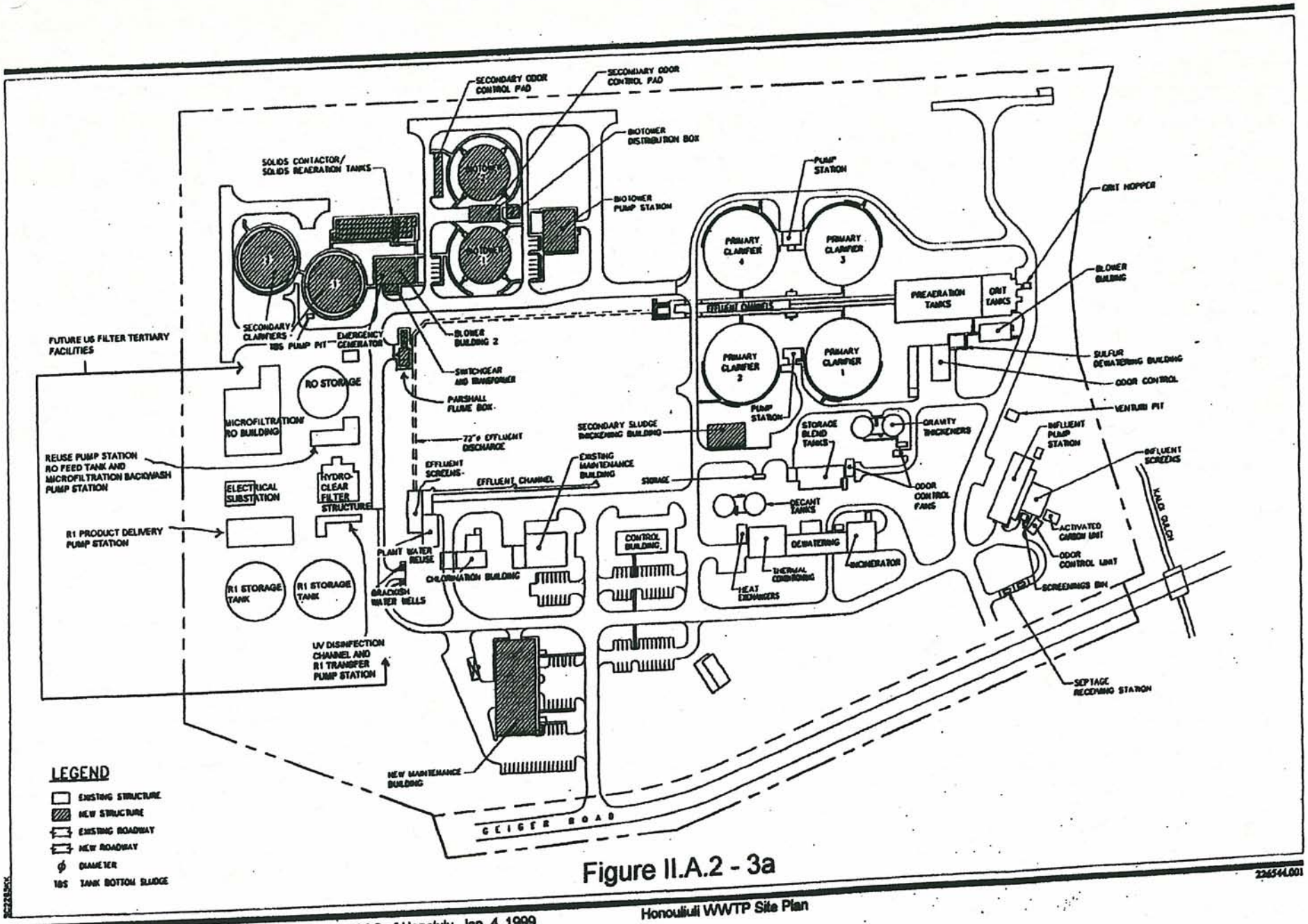

Figure II.A.2 - 3a

Honouliuli WWTP Site Plan

226544.001

GMP ASSOCIATES, INC.
NOVEMBER 1998

Plus addition of US. Filter Project by C&C of Honolulu, Jan. 4, 1999

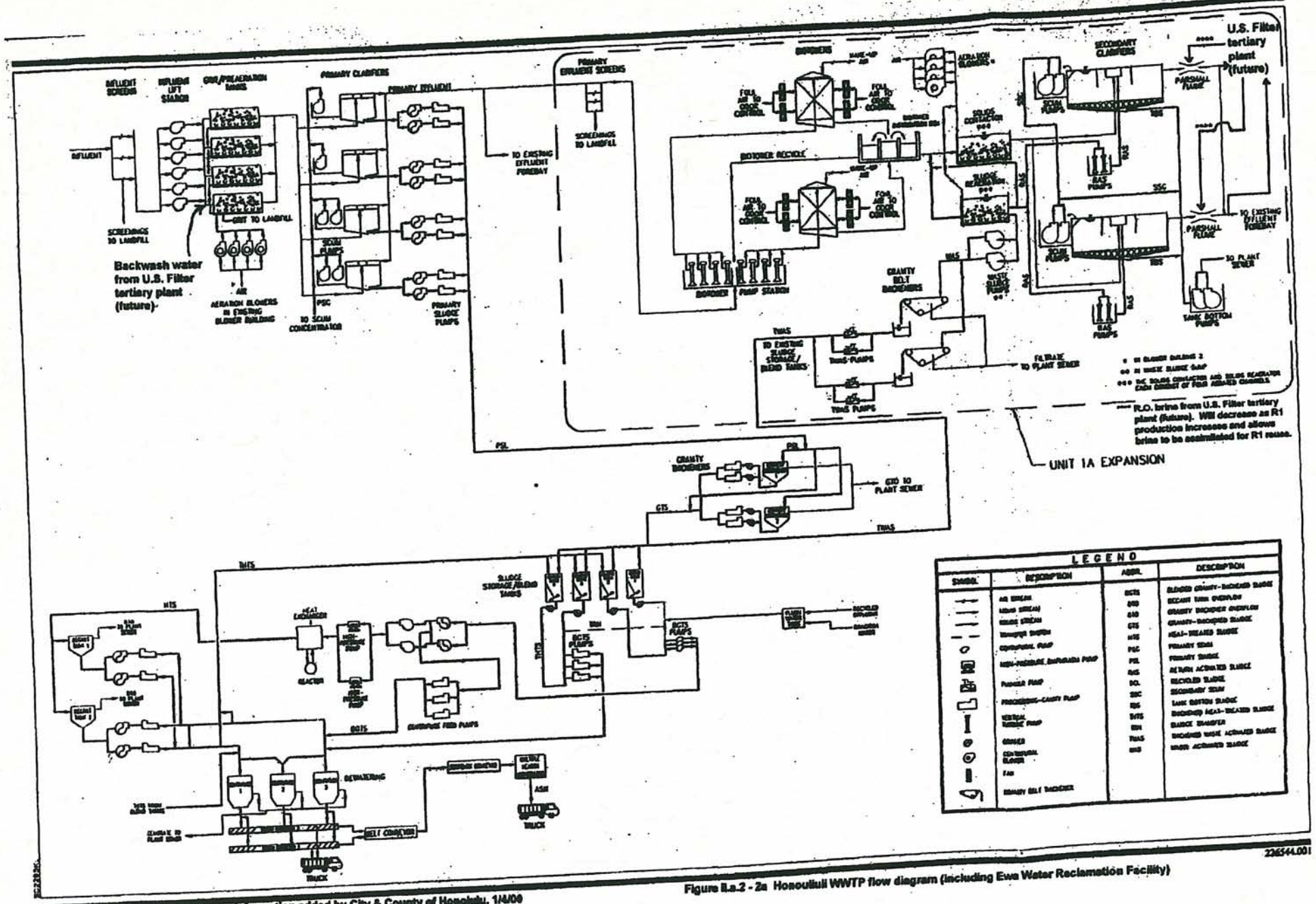

Figure II.a.2 - 2a Honouliuli WWTP flow diagram (including Ewa Water Reclamation Facility)

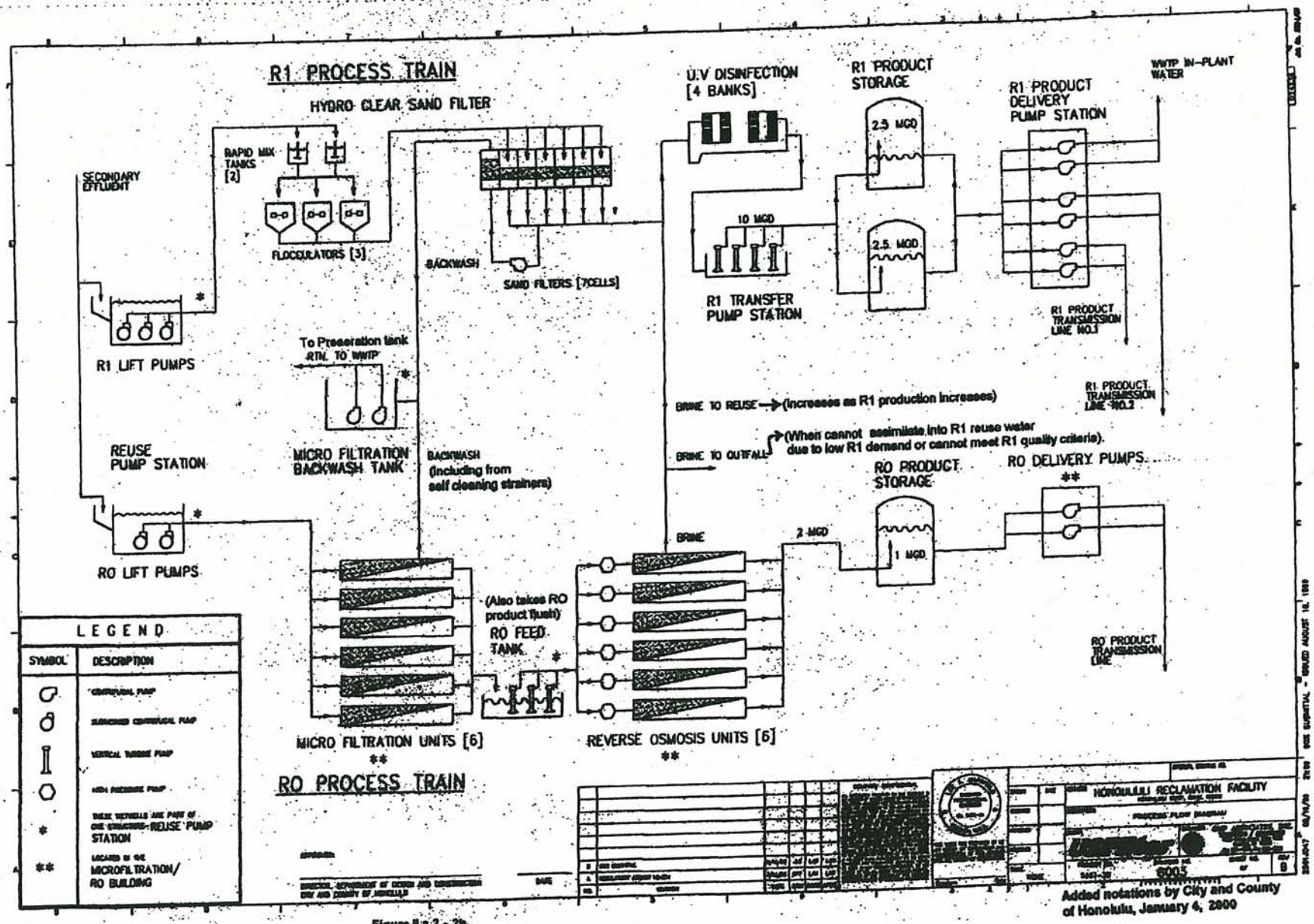

Added notations by City and County of Honolulu, January 4, 2000

Figure II.a.2 - 2b

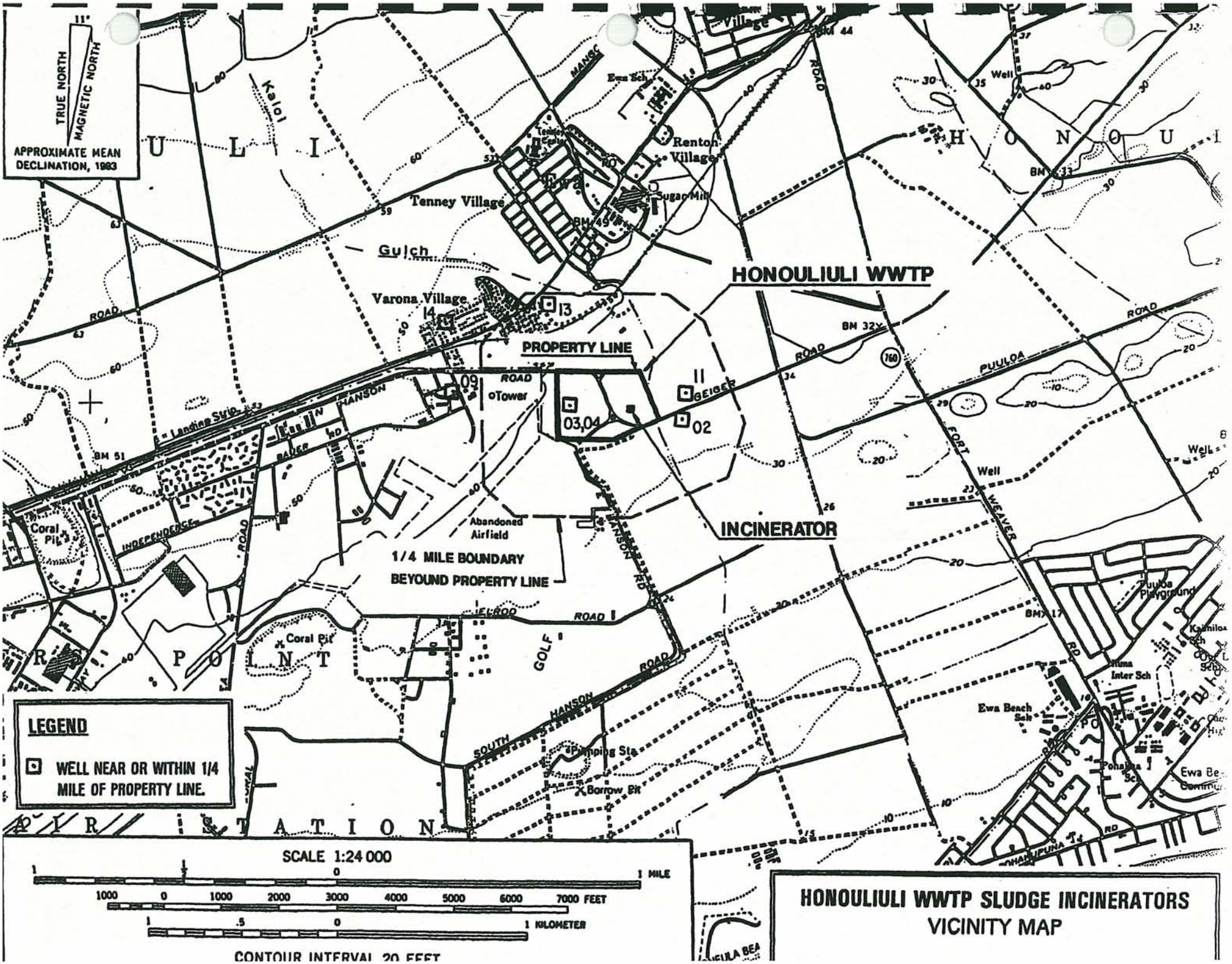

HONOULIULI WWTP SLUDGE INCINERATORS
VICINITY MAP

FACILITY NAME AND PERMIT NUMBER:

Honouliuli Wastewater Treatment Plant HI0020877

Form Approved 1/14/99
OMB Number 2040-0086

B. GENERATION OF SEWAGE SLUDGE OR PREPARATION OF A MATERIAL DERIVED FROM SEWAGE SLUDGE

Complete this section if your facility generates sewage sludge or derives a material from sewage sludge.

B.1. Amount Generated on Site

Total dry metric tons per 365-day period generated at your facility: 4,070 dry metric tons

B.2. Amount Received from Off Site. If your facility receives sewage sludge from another facility for treatment, use, or disposal, provide the following information for each facility from which sewage sludge is received. If you receive sewage sludge from more than one facility, attach additional pages as necessary.

a. Facility name: Wahiawa Wastewater Treatment Plant

b. Mailing address: 1000 Uluohia Street, Suite 308
Kapolei, HI 96707

c. Contact person: Frank J. Doyle, P.E.
Title: Director
Telephone number: (808) 692-5159

d. Facility address (not P.O. Box): 111 California Avenue
Wahiawa, HI 96786

e. Total dry metric tons per 365-day period received from this facility: 905.00 dry metric tons

f. Describe, on this form or on another sheet of paper, any treatment processes known to occur at the off-site facility, including blending activities and treatment to reduce pathogens or vector attraction characteristics.

a. Facility name: Paalaa Kai Wastewater Treatment Plant

b. Mailing address: 1000 Uluohia Street, Suite 308
Kapolei, HI 96707

c. Contact person: Frank J. Doyle, P.E.
Title: Director
Telephone number: (808) 692-5159

d. Facility address (not P.O. Box): 66-1012 Oliana Street
Waialua, HI 96791

e. Total dry metric tons per 365-day period received from this facility: 34.00 dry metric tons

f. Describe, on this form or on another sheet of paper, any treatment processes known to occur at the off-site facility, including blending activities and treatment to reduce pathogens or vector attraction characteristics.

B.3. Treatment Provided At Your Facility

a. Which class of pathogen reduction does the sewage sludge meet at your facility?

_____ Class A _____ Class B __X__ Neither or unknown

b. Describe, on this form or another sheet of paper, any treatment processes used at your facility to reduce pathogens in sewage sludge:

Zimpro thermal conditioning is used to process the sludge and reduce the pathogens. A sludge incinerator is available but will not be used as an alternative for sludge disposal.

c. Which vector attraction reduction option is met for the sewage sludge at your facility?

_____ Option 1 (Minimum 38 percent reduction in volatile solids)
_____ Option 2 (Anaerobic process, with bench-scale demonstration)
_____ Option 3 (Aerobic process, with bench-scale demonstration)
_____ Option 4 (Specific oxygen uptake rate for aerobically digested sludge)
_____ Option 5 (Aerobic processes plus raised temperature)
_____ Option 6 (Raise pH to 12 and retain at 11.5)
_____ Option 7 (75 percent solids with no unstabilized solids)
_____ Option 8 (90 percent solids with unstabilized solids)
__X__ None or unknown

d. Describe, on this form or another sheet of paper, any treatment processes used at your facility to reduce vector attraction properties of sewage sludge:

Thermal conditioning and centrifugal dewatering are used to reduce the attraction of sludge to vectors.

e. Describe, on this form or another sheet of paper, any other sewage sludge treatment or blending activities not identified in (a) - (d) above:

Complete Section B.4 if sewage sludge from your facility meets the ceiling concentrations in Table 1 of 40 CFR 503.13, the pollutant concentrations in Table 3 of §503.13, the Class A pathogen reduction requirements in §503.32(a), and one of the vector attraction reduction requirements in § 503.33(b)(1)-(8) and is land applied. Skip this section if sewage sludge from your facility does not meet all of these criteria.

B.4. Preparation of Sewage Sludge Meeting Ceiling and Pollutant Concentrations, Class A Pathogen Requirements, and One of Vector Attraction Reduction Options 1-8.

a. Total dry metric tons per 365-day period of sewage sludge subject to this section that is applied to the land:

__0__ dry metric tons

b. Is sewage sludge subject to this section placed in bags or other containers for sale or give-away for application to the land?

_____ Yes __X__ No

Complete Section B.5. if you place sewage sludge in a bag or other container for sale or give-away for land application. Skip this section if the sewage sludge is covered in Section B.4.

B.5. Sale or Give-Away in a Bag or Other Container for Application to the Land.

a. Total dry metric tons per 365-day period of sewage sludge placed in a bag or other container at your facility for sale or give-away for application to the land:

0 dry metric tons

b. Attach, with this application, a copy of all labels or notices that accompany the sewage sludge being sold or given away in a bag or other container for application to the land.

Complete Section B.6. if sewage sludge from your facility is provided to another facility that provides treatment or blending. This section does not apply to sewage sludge sent directly to a land application or surface disposal site. Skip this section if the sewage sludge is covered in Sections B.4 or B.5. If you provide sewage sludge to more than one facility, attach additional pages as necessary.

B.6. Shipment for Treatment or Blending.

FACILITY NAME AND PERMIT NUMBER:

Honouliuli Wastewater Treatment Plant HI0020877

Form Approved 1/14/99
OMB Number 2040-0086

a. Receiving facility name: Navy Public Works Center, Pearl Harbor - Biosolids Treatment Facility

b. Mailing address: Commanding Officer, Navy Public Works Center Pearl Harbor, Attn: Code 346
400 Marshall Road, Pearl Harbor, Hawaii 96860-3139 (Tax Map Key:9-1-13:60)

c. Contact person: Terrie Yamamoto

Title: Environmental Engineer Telephone number: (808) 471-1171

d. Total dry metric tons per 365-day period of sewage sludge provided to receiving facility: 3,900
City figure, based on sludge truckloads, as reported to EPA/DOH on 2/19/2004 (EMC 04-086).

e. Does the receiving facility provide additional treatment to reduce pathogens in sewage sludge from your facility?

X Yes ____ No

Which class of pathogen reduction is achieved for the sewage sludge at the receiving facility?

X Class A ____ Class B ____ Neither or Unknown

Describe, on this form or another sheet of paper, any treatment processes used at the receiving facility to reduce pathogens in sewage sludge:

Sludge mixed with City green waste (3 to 1 ratio) and composted in static aerated piles in accordance with 40 CFR 503 requirements.

f. Does the receiving facility provide additional treatment to reduce vector attraction characteristics of the sewage sludge?

x Yes ____ No

Which vector attraction reduction option is met for the sewage sludge at your facility?

____ Option 1 (Minimum 38 percent reduction in volatile solids)
____ Option 2 (Anaerobic process, with bench-scale demonstration)
____ Option 3 (Aerobic process, with bench-scale demonstration)
____ Option 4 (Specific oxygen uptake rate for aerobically digested
X Option 5 (Aerobic processes plus raised temperature)
____ Option 6 (Raise pH to 12 and retain at 11.5)
____ Option 7 (75 percent solids with no unstabilized solids)
____ Option 8 (90 percent solids with unstabilized solids)
____ None or unknown

Describe, on this form or another sheet of paper, any treatment processes used at the receiving facility to reduce vector attraction properties of sewage sludge.

Sludge composted in static aerated piles, as previously described.

g. Does the receiving facility provide any additional treatment or blending activities not identified in (c) or (d) above?

x Yes ____ No

If yes, describe, on this form or another sheet of paper, the treatment or blending activities not identified in (c) or (d) above:

The facility blends green waste with the sludge received from the Honouliuli WWTP at ratio of 3 to 1.

h. If you answered yes to (e), (f), or (g), attach a copy of any information you provide the receiving facility to comply with the "notice and necessary information" requirement of 40 CFR 503.12(g).
(Documents and information are attached.)

i. Does the receiving facility place sewage sludge from your facility in a bag or other container for sale or give-away for application to the land?

X Yes _____ No

Complete Section B.7 if sewage sludge from your facility is applied to the land, unless the sewage sludge is covered in:

- **Section B.4 (it meets Table 1 ceiling concentrations, Table 3 pollutant concentrations, Class A pathogen requirements, and one of vector attraction reduction options 1-8); or**
- **Section B.5 (you place it in a bag or other container for sale or give-away for application to the land); or**
- **Section B.6 (you send it to another facility for treatment or blending).**

B.7. Land Application of Bulk Sewage Sludge.

a. Total dry metric tons per 365-day period of sewage sludge applied to all land application sites: N/A dry metric tons

b. Do you identify all land application sites in Section C of this application? _____ Yes _____ No
If no, submit a copy of the land application plan with application (see instructions).

c. Are any land application sites located in States other than the State where you generate sewage sludge or derive a material from sewage sludge?

_____ Yes _____ No

If yes, describe, on this form or another sheet of paper, how you notify the permitting authority for the States where the land application sites are located. Provide a copy of the notification.

Complete Section B.8 if sewage sludge from your facility is placed on a surface disposal site.

B.8. Surface Disposal.

a. Total dry metric tons of sewage sludge from your facility placed on all surface disposal sites per 365-day period:
N/A dry metric tons

b. Do you own or operate all surface disposal sites to which you send sewage sludge for disposal?

_____ Yes _____ No

If no, answer B.8.c through B.8.f for each surface disposal site that you do not own or operate. If you send sewage sludge to more than one such surface disposal site, attach additional pages as necessary.

Complete Section B.9 if sewage sludge from your facility is fired in a sewage sludge incinerator.

B.9. Incineration. (A sewage sludge incinerator is available in the plant, but will not be used as a sludge disposal alternative. Therefore, incinerator data is not provided in this reapplication.)

a. Total dry metric tons of sewage sludge from your facility fired in all sewage sludge incinerators per 365-day period:

N/A dry metric tons

b. Do you own or operate all sewage sludge incinerators in which sewage sludge from your facility is fired?

____ Yes X No

If no, complete B.9.c through B.9.f for each sewage sludge incinerator that you do not own or operate. If you send sewage sludge to more than one such sewage sludge incinerator, attach additional pages as necessary.

Complete Section B.10 if sewage sludge from this facility is placed on a municipal solid waste landfill.

B.10. Disposal in a Municipal Solid Waste Landfill. Provide the following information for each municipal solid waste landfill on which sewage sludge from your facility is placed. If sewage sludge is placed on more than one municipal solid waste landfill, attach additional pages as necessary.

a. Name of landfill: Waimanalo Gulch Sanitary Landfill

b. Contact person: Joe Hernandez

Title: District Manager, Waste Management of Hawaii

Telephone number: (808) 668-2985

Contact is ____ Landfill owner X Landfill operator

c. Mailing address: 92-460 Farrington Highway
Kapolei, HI 96707

d. Location of municipal solid waste landfill:

Street or route #: 92-460 Farrington Highway

County: Honolulu

City or Town: Kapolei State: HI Zip: 96707

e. Total dry metric tons of sewage sludge from your facility placed in this municipal solid waste landfill per 365-day period:

170.00 dry metric tons

f. List, on this form or an attachment, the numbers of all other Federal, State, and local permits that regulate the operation of this municipal solid waste landfill.

Permit Number	Type of Permit
LF-0058-02	Landfill Permit

g. Submit, with this application, information to determine whether the sewage sludge meets applicable requirements for disposal of sewage sludge in a municipal solid waste landfill (e.g., results of paint filter liquids test and TCLP test) See note below)

h. Does the municipal solid waste landfill comply with applicable criteria set forth in 40 CFR Part 258?

X Yes ____ No

Paint filter and TCLP test results are attached. Note that not all parameters were not tested in 2003 under the TCLP test. The City plans to redo the test for all parameters as required by the regulations on sludge disposal to a municipal landfill.

HONOULIULI WASTEWATER TREATMENT FACILITY
NPDES PERMIT NO. HI0020877

FORM 2S
PART 2: PERMIT APPLICATION INFORMATION
SECTION B. GENERATION OF SEWAGE SLUDGE OR PREPARATION OF A MATERIAL DERIVED FROM SEWAGE SLUDGE
B.6. Shipment for Treatment or Blending.

The Honouliuli WWTP transports most of the wastewater sludge to the Barbers Point Composting Center for reclamation. The sludge is mixed with City green waste and composted in static aerated piles in accordance with 40 CFR 503 requirements. Upon completion of composting, the recorded date, temperature and pathogen laboratory data are reported to the Hawaii Department of Health for review and approval. As a Class A and Exceptional Quality Biosolid, the product is sold by request forms to available customers. Appropriate records and documents are attached.

DEPARTMENT OF ENVIRONMENTAL SERVICES
Division of Environmental Quality
CITY AND COUNTY OF HONOLULU
1000 ULUOHIA STREET, SUITE 303
KAPOLEI, HAWAII 96707
PHONE: (808) 692-5263 FAX: (808) 692-5520

JEREMY HARRIS
Mayor

FRANK J. DOYLE, P.E.
Director

SILVESTRE L. ULEP, P.E.
Chief

FAX COVER SHEET

TO:	John Swim	DATE:	June 1, 2004
	Mokuleia Landscape & Nursery Co.	FAX NO:	637-6890
FROM:	Ken Kawahara	PHONE:	(808) 692-5377
BRANCH:	Regulatory Control	FAX NO:	(808) 692-5520
SUBJECT:	City and County of Honolulu Biosolids Compost		

TOTAL NUMBER OF PAGES TRANSMITTED (including cover sheet): 2

Aloha John,

Thank you for your interest in the City & County of Honolulu's biosolids compost. The process to obtain the biosolids compost is as follows:

1. Fill out the top (portion surrounded by the box) of the attached request form.
2. Mail request form with original signature to me at the address on this letterhead or hand deliver if we show you the product.
3. After approval, I will contact you to schedule a pick-up date and time.
4. At the time of biosolids compost pick-up, we will require a check made out to the City & County of Honolulu. Please indicate Biosolids Compost, Sewer Fund on the comment portion of the check. The advertised price of the compost is $15 per cubic yard.

We appreciate your interest and thank you for helping us in our recycling efforts. Should you have any questions, please call me.

REQUEST FOR C&C BIOSOLIDS COMPOST

CUSTOMER ORG/CODE _____

ADDRESS _____

_____

_____

PHONE / FAX / EMAIL _____

REQUESTOR/POC NAME _____

DATE REQUESTED _____

DATE NEEDED _____ QTY NEEDED (CY) _____

RELEASE:

I understand that this compost is made from sewage sludge. I also understand that for best results, it should be mixed (one to one ratio) with topsoil before application. I certify that the quantity and placement of this material will be in accordance with the current biosolids treatment facility permit, and that it cannot be deviated from without prior approval and resubmission of this request form to the Biosolid Treatment Facility Manager.

Requestor/poc's signature _____ date _____

FOR C&C OF HONOLULU, DEPARTMENT OF ENVIRONMENTAL SERVICES USE ONLY:

APPROVED:

_____ _____

FRANK J. DOYLE, P.E. Date
Director, Department of Environmental Services

TOTAL QUANTITY (CY) APPROVED _____

(CCH, ENV poc is Ken Kawahara at 692-5377, FAX 550-6942 or 692-5520)

FOR BTF USE ONLY:

Date of Pickup _____ Batch Number _____

BTF releaser name _____ signature _____

Driver name _____ signature _____

(BTF poc is Lonnie Felise at 684-1660, FAX 684-1560)

LINDA LINGLE
GOVERNOR OF HAWAII

CHIYOME L. FUKINO, M.D.
DIRECTOR OF HEALTH

STATE OF HAWAII
DEPARTMENT OF HEALTH
P.O. BOX 3378
HONOLULU, HAWAII 96801

In reply, please refer to:
SWD / WB
030659

July 28, 2003

Mr. R. M. Wakumoto
Division Head, Compliance
Regional Environmental Department
Department of the Navy
517 Russell Avenue, Suite 110
Pearl Harbor, Hawaii 96860-4884

Dear Mr. Wakumoto:

Subject: Navy Biosolids Treatment Facility
Barbers Point, Oahu

We have reviewed data submitted for compost material from the subject treatment facility. The following compost windrows met the requirements of 40 CFR 503:

1. [redacted]-010903 (C041202, C041502, C041702, C042202, C042602, and C042902)
2. [redacted]-011603 (C52402, C52802, C52902, C53002, C60302, C60602, and C60502)
3. [redacted]-120602 (C032602, C032802, C040102, C040302, C040502, C040802, and C041002)
4. [redacted]-012703 (C61002, C61102, C61302, C61402, C617602, C61902, and C42402)

Should you have any questions, please contact the Wastewater Branch at 586-4294.

Sincerely,

HAROLD K. YEE, P.E., CHIEF
Wastewater Branch

GST:erm

c: S. Chang, Solid and Hazardous Waste Branch
Ken Kawahara, City and County of Honolulu (Regulatory Compliance Branch)

DEPARTMENT OF THE NAVY
COMMANDER
NAVY REGION HAWAII
850 TICONDEROGA ST STE 110
PEARL HARBOR HI 96860-5102

5090
Ser N465/ 00231
18 JUL 2003

CERTIFIED MAIL NO. 7001 2510 0001 9471 5432

Ms. Gayle Takasaki
Hawaii State Department of Health
Environmental Management Division
Wastewater Branch
919 Ala Moana Boulevard
Honolulu HI 96814

Dear Ms. Takasaki:

SUBJECT: SOLID WASTE MANAGEMENT PERMIT NO. CO-0018-99 NAVY BIOSOLIDS TREATMENT FACILITY LOCATED AT BARBERS POINT, OAHU

As required by Solid Waste Management Permit No. CO-0018-99, Special Condition Number 22, we are submitting to your office the temperature and pathogen laboratory data for compost produced from the City and County of Honolulu biosolids for your review and approval prior to releasing the compost to the City and County of Honolulu.

Enclosed are the temperature logs for seven static aerated piles (C52402, C52802, C52902, C53002, C60302, C60502 and C60602). All of the piles met the time and temperature requirements of 40 CFR 503. These seven piles were combined to form windrow C0023-011603. Also enclosed are the Fecal Coliform Results and Metal Results for windrow C0023-011603. The results show that each of the seven samples had a Fecal Coliform value of less than 1000 MPN and that the compost meets the metal concentration limits for Exceptional Quality Biosolids.

The approximate quantity of compost in windrow C0023-011603 is 350 cubic yards.

Should you have any questions, please contact Ms. Terrie Yamamoto at 471-1171 extension 204.

Sincerely,

R. M. WAKUMOTO
Director
Regional Environmental Department
By direction of
Commander, Navy Region Hawaii

Enclosures: 1. Temperature data
2. Pathogen laboratory data
3. Metal laboratory data

Copy to: City and County of Honolulu (Mr. Ken Kawahara)

STL Seattle

Client Name:	Navy Public Works Center Pearl Harbor
PWC Customer:	STL0076-4 / PWC CODE 351, LF
Sample Description/ID:	C0023 (011603) METALS - 4 COMP
PWC Lab Sample No.:	03-07725
STL Lab No.:	114350-08
Date Received:	6/20/03
Report Date:	6/25/03

Mercury by USEPA Method 7471
Date Prepared: 6/24/03
Date Analyzed: 6/25/03
QC Batch ID: ZS1328
Analyst: DEM

Analyte	Result (mg/kg)	PQL	Flags
Mercury	2.7	0.27	

STL Seattle

Client Name:	Navy Public Works Center Pearl Harbor
PWC Customer:	STL0076-4 / PWC CODE 351, LF
Sample Description/ID:	C0023 (011603) METALS - 4 COMP
PWC Lab Sample No.:	03-07725
STL Lab No.:	114350-08
Date Received:	6/20/03
Report Date:	6/24/03

Metals by ICP - USEPA Method 6010
Date Prepared: 6/23/03
Date Analyzed: 6/23/03
QC Batch ID: SP799
Analyst: KDW

Analyte	Result (mg/kg)	PQL	Flags
Arsenic	ND	2.73	
Cadmium	ND	1.37	
Chromium	35.8	2.73	
Copper	470	2.73	
Lead	28	2.73	
Molybdenum	8.24	2.73	
Nickel	21	2.73	
Selenium	ND	13.7	
Zinc	1220	2.73	

(1B

STL Seattle

Client Name:	Navy Public Works Center Pearl Harbor
PWC Customer:	STL0076-4 / PWC CODE 351, LF
Sample Description/ID:	C0023 (011603) METALS - 2 COMP
PWC Lab Sample No.:	03-07724
STL Lab No.:	114350-07
Date Received:	6/20/03
Report Date:	6/25/03

Mercury by USEPA Method 7471
Date Prepared: 6/24/03
Date Analyzed: 6/25/03
QC Batch ID: ZS1328
Analyst: DEM

Analyte	Result (mg/kg)	PQL	Flags
Mercury	2.4	0.23	

P3

STL Seattle

Client Name:	Navy Public Works Center Pearl Harbor
PWC Customer:	STL0076-4 / PWC CODE 351, LF
Sample Description/ID:	C0023 (011603) METALS - 2 COMP
PWC Lab Sample No.:	03-07724
STL Lab No.:	114350-07
Date Received:	6/20/03
Report Date:	6/24/03

Metals by ICP - USEPA Method 6010
Date Prepared: 6/23/03
Date Analyzed: 6/23/03
QC Batch ID: SP799
Analyst: KDW

Analyte	Result (mg/kg)	PQL	Flags
Arsenic	ND	2.31	
Cadmium	ND	1.16	
Chromium	33.3	2.31	
Copper	316	2.31	
Lead	25.7	2.31	
Molybdenum	6.07	2.31	
Nickel	15.7	2.31	
Selenium	ND	11.6	
Zinc	948	2.31	

ENCLOSURES (3)

NAVY PUBLIC WORKS CENTER
ENVIRONMENTAL LABORATORY
PEARL HARBOR, HAWAII 96860-3139
(808) 474-3704

Report Date: 22 Jun 03

TO: Code 351, Attn : L. Feiise

CC: COMNAVREGHI C/N 465, Attn : Terrie Yamamoto

FECAL COLIFORM RESULTS OF FINISHED COMPOST
Analytical Method: Appendix F, Control of Pathogens and Vector Attraction in Sewage Sludge (EPA/625/R-92/013 – October 1999)

Lab No.	See Below	Date Sampled	17 Jun 03
JON	688-1624	Date/Time Samples Received	17 Jun 03 / 1114
Sampler(s)	L. Abe, C. Imai	Date/Time Samples Processed	17 Jun 03 / 1300

Lab Number	Sample ID	Time Sampled	MPN Fecal Coliform/g
03-07734	FC #1– C0023-011603	0926	< 10

REMARKS:

ANALYST(S) : Lucienne M. Abe, Cherie A. Imai

Lucienne M. Abe
Microbiologist

ENCLOSURES (2)

NAVY PUBLIC WORKS CENTER
ENVIRONMENTAL LABORATORY
PEARL HARBOR, HAWAII 96860-3139
(808) 474-3704

Report Date: 06 Jul 03

TO: Code 351, Attn : L. Feiise

CC: COMNAVREGHI C/N 465, Attn : Terrie Yamamoto

FECAL COLIFORM RESULTS OF FINISHED COMPOST
Analytical Method: Appendix F, Control of Pathogens and Vector Attraction in Sewage Sludge (EPA/625/R-92/013 – October 1999)

Lab No.	See Below	Date Sampled	03 Jul 03
JON	688-1624	Date/Time Samples Received	03 Jul 03 / 1000
Sampler(s)	L. Abe, C. Imai	Date/Time Samples Processed	03 Jul 03 / 1040

Lab Number	Sample ID	Time Sampled	MPN Fecal Coliform/g
03-08342	FC #6– C0023-011603	0906	< 1
03-08343	FC #7– C0023-011603	0910	< 1

REMARKS: The geometric mean of seven samples is < 2.7.

ANALYST(S) : Lucienne M. Abe, Cherie A. Imai

Lucienne M. Abe
Microbiologist

K70103

STATIC PILE Number:	C52902
DATE:	5/29/02

Datta logger
M10459

Manifest Numbers:	C422	C423	C124
	C426	C427	C428

DATE	TEMPERATURE READINGS			
	WEST END	2/4 P	3/4 P	EAST END
05/30/02	133	125	126	133
05/31/02	136	138	148	141
06/01/02	158	171	177	150
06/02/02	170	180	181	166
06/03/02	177	186	186	173
06/04/02	195	203	199	186
06/05/02	202	202	200	202
06/06/02	201	200	197	203
06/07/02	199	197	195	202
06/08/02	197	195	193	200
06/09/02	195	192	191	198
06/10/02	193	191	190	197
06/11/02	192	190	190	196
06/12/02	191	189	189	195
06/13/02	190	189	188	194
06/14/02	189	188	187	193
06/15/02	188	187	186	193
06/16/02	187	186	186	192
06/17/02	186	185	185	191
06/18/02	184	183	184	190
06/19/02	197	196	199	194
06/20/02	197	196	199	195

STATIC PILE Number:	C53002
DATE:	5/30/02

DataLogger
M08679

Manifest Numbers:	C429	C430	C431
	C433	C434	C435

DATE	TEMPERATURE READINGS			
	WEST END	2/4 P	3/4 P	EAST END
05/31/02	140	132	133	173
06/01/02	142	143	134	189
06/02/02	154	159	136	193
06/03/02	193	179	140	191
06/04/02	200	193	153	188
06/05/02	200	198	183	186
06/06/02	199	199	198	185
06/07/02	198	199	200	183
06/08/02	197	198	201	182
06/09/02	197	197	201	182
06/10/02	195	197	201	181
06/11/02	195	196	201	181
06/12/02	194	196	201	180
06/13/02	193	195	200	180
06/14/02	193	195	200	179
06/15/02	192	195	200	178
06/16/02	192	195	200	178
06/17/02	190	194	200	178
06/18/02	190	193	200	177
06/19/02	189	193	200	176
06/20/02	188	193	200	175
06/21/02	188	194	200	175

STATIC PILE Number:	C60302
DATE:	6/3/02

DattaLogger
M08678

Manifest Numbers:	C436	C437	C438
	C440	C441	C442

DATE	TEMPERATURE READINGS			
	WEST END	2/4 P	3/4 P	EAST END
06/04/02	138	155	158	144
06/05/02	140	176	160	158
06/06/02	141	180	165	170
06/07/02	141	184	179	187
06/08/02	147	187	189	185
06/09/02	158	189	193	184
06/10/02	171	189	195	184
06/11/02	189	189	195	184
06/12/02	198	188	196	184
06/13/02	201	188	197	183
06/14/02	202	187	197	183
06/15/02	202	186	197	182
06/16/02	202	186	197	181
06/17/02	202	185	197	180
06/18/02	202	185	196	179
06/19/02	202	184	197	179
06/20/02	201	184	197	178
06/21/02	201	183	197	177
06/22/02	201	183	197	176
06/23/02	201	182	197	176
06/24/02	202	182	197	175
06/25/02	201	183	196	176

STATIC PILE Number:	C60602
DATE:	6/6/02

Data logger
M09518

Manifest Numbers:	C450	C451	C452
	C454	C455	C456

DATE	TEMPERATURE READINGS			
	WEST END	2/4 P	3/4 P	EAST END
06/07/02	128	120	119	114
06/08/02	127	120	120	115
06/09/02	133	125	125	135
06/10/02	139	131	133	156
06/11/02	142	136	139	171
06/12/02	145	142	145	182
06/13/02	150	151	151	190
06/14/02	153	157	156	193
06/15/02	157	164	164	195
06/16/02	159	171	172	196
06/17/02	163	177	180	196
06/18/02	166	183	185	196
06/19/02	169	187	189	196
06/20/02	173	190	192	196
06/21/02	177	193	194	195
06/22/02	181	194	195	195
06/23/02	184	195	197	195
06/24/02	187	196	196	195
06/25/02	189	197	196	194
06/26/02	190	197	199	194
06/27/02	193	196	199	194
06/28/02	194	199	199	194

STATIC PILE Number:	C60502
DATE:	6/3/02

Data logger
M09885

Manifest Numbers:	C443	C444	C445
	C447	C448	C449

DATE	TEMPERATURE READINGS			
	WEST END	2/4 P	3/4 P	EAST END
06/04/02	141	171	145	148
06/05/02	146	182	147	153
06/06/02	150	191	151	158
06/07/02	155	193	156	163
06/08/02	163	193	165	170
06/09/02	173	192	179	179
06/10/02	188	192	191	187
06/11/02	198	191	198	193
06/12/02	202	190	200	195
06/13/02	203	189	200	196
06/14/02	203	188	201	197
06/15/02	203	186	201	197
06/16/02	203	186	201	197
06/17/02	203	184	201	197
06/18/02	203	183	201	197
06/19/02	203	182	201	197
06/20/02	202	182	201	197
06/21/02	202	181	201	197
06/22/02	202	180	201	197
06/23/02	202	180	201	196
06/24/02	201	180	200	196
06/25/02				

HONOULIULI WASTEWATER TREATMENT FACILITY
NPDES PERMIT NO. HI0020877

FORM 2S
PART 2: PERMIT APPLICATION INFORMATION
SECTION B. GENERATION OF SEWAGE SLUDGE OR PREPARATION OF A MATERIAL DERIVED FROM SEWAGE SLUDGE
B.10. Disposal in a Municipal Solid Waste Landfill.

The Honouliuli WWTP transports a minor portion of the wastewater plant sludge to the Waimanalo Gulch Sanitary Landfill for disposal. Information to determine whether the sewage sludge meets applicable requirements for disposal in a municipal solid waste landfill, paint filter liquids test and TCLP records for 2003, are attached.

44442

DEPARTMENT OF ENVIRONMENTAL SERVICES
CITY AND COUNTY OF HONOLULU
DIVISION OF WASTEWATER TREATMENT AND DISPOSAL
1350 SAND ISLAND PARKWAY, HONOLULU, HAWAII 96819 - 4319

RECEIVED

'04 JAN 30 A8:19

ENVIRONMENTAL SERVICES
ENVIRONMENTAL QUALITY

JEREMY HARRIS
MAYOR

FRANK J. DOYLE, P.E.
DIRECTOR

TIMOTHY A. HOUGHTON
DEPUTY DIRECTOR

EARL W. M. NG
ACTING CHIEF

MEMORANDUM January 27, 2004 TP 04-013

TO: MR. SILVESTRE ULEP, CHIEF
DIVISION OF ENVIRONMENTAL QUALITY

FROM: EARL W. M. NG, ACTING CHIEF JAN 28 2004

SUBJECT: PAINT FILTER TEST RESULTS FOR HONOULIULI WASTEWATER TREATMENT PLANT FOR 2003

Please find attached the Paint Filter Test results for the year. I certify that our Division has implemented a program under my direction and supervision this past year that was designed to insure that the paint filter test requirements are being met.

If you have any questions, please call Mr. Marcelino Armas at 681-3138, extension 100.

Attachment

Paint Filter Test

Form 1
Monthly Testing

Plant/Source: HWWTP Year: 2003

Part 1: Monthly Check

For each sample type, do a paint filter test a minimum of once a month. Indicate whether the test passed (circle for Yes or No). If the test didn't pass, record the remedial actions and follow-up test results in Part 2.

Enter Date checked -->	Jan 1/3/03	Feb 2/25/03	Mar 3/30/03	Apr 4/28/03	May 5/20/03	Jun 6/05/03	Jul 7/20/03	Aug 8/26/03	Sep 9/28/03	Oct 10/24/03	Nov 11/30/03	Dec 12/28/03
Enter Initials -->	aa	aa	aa	aa	aa	aa	aa	aa	aa	aa	aa	aa
Sludge	Y/N	Y/N	Y/N	Y/N	Y/N	Y/N	Y/N	Y/N	Y/N	Y/N	Y/N	Y/N
Grit	Y/N	Y/N	Y/N	Y/N	Y/N	Y/N	Y/N	Y/N	Y/N	Y/N	Y/N	Y/N
Screenings	Y/N	Y/N	Y/N	Y/N	Y/N	Y/N	Y/N	Y/N	Y/N	Y/N	Y/N	Y/N
Other (specify): SEC. + EFF.	Y/N	Y/N	Y/N	Y/N	Y/N	Y/N	Y/N	Y/N	Y/N	Y/N	Y/N	Y/N

t 2: Failed Paint Fil. Test Follow-Up

Record remedial action and then do another paint filter test. Continue correction and testing until test pasts.

Sample Description	Remedial actions	Initial	Sampling Dates	Results 1 passed?	Results 2 passed?	Results passed?
				Y/N	Y/N	Y/N
				Y/N	Y/N	Y/N
				Y/N	Y/N	Y/N
				Y/N	Y/N	Y/N
				Y/N	Y/N	Y/N
				Y/N	Y/N	Y/N
				Y/N	Y/N	Y/N
				Y/N	Y/N	Y/N
				Y/N	Y/N	Y/N
				Y/N	Y/N	Y/N
				Y/N	Y/N	Y/N
				Y/N	Y/N	Y/N

pproval by Person in Charge: _____ (Signature) _____ (date) _____ (Title)

Honouliuli WWTP

Paint Filter Test for

Month of Dec. 03

Sample Size: 100 g (for solid samples)

Directions: Place sample into paint filter. Allow sample to drain for 5 minutes into a graduated cylinder. If liquid is detected in the graduated cylinder, the sample contains FREE LIQUID.

Sample Type	Sample Date/Time	Start Time/ End Time	Sampled By	Date of Analysis	Results: Liquid Present? (Yes/No)	If Yes, Volume
TS ake	12/28/03 10:25AM	Start 10:26AM End: 10:31AM	Ahe	12/28/03	No	
Influent Screenings	12/28/03 9:39AM	Start: 9:40AM End: 9:45AM	Ahe	12/28/03	No	
GRIT	12/28/03 9:19AM	Start: 9:20AM End: 9:25AM	Ahe	12/28/03	No	
Secondary Screenings	12/28/03 8:57 AM	Start: 8:58AM End: 9:03 AM	Ahe	12/28/03	No	
Effluent Screenings	12/28/03 8:47 AM	Start:: 8:48AM End: 8:53AM	Ahe	12/23/03	No	

Honouliuli WWTP

Paint Filter Test for

Month of Nov. 03

Sample Size: 100 g (for solid samples)

Directions: Place sample into paint filter. Allow sample to drain for 5 minutes into a graduated cylinder. If liquid is detected in the graduated cylinder, the sample contains FREE LIQUID.

Sample Type	Sample Date/Time	Start Time/ End Time	Sampled By	Date of Analysis	Results: Liquid Present? (Yes/No)	If Yes, Volume
TS ke	11/30/03 1:18 P	Start: 1:19 P End: 1:24 P	[illegible]	11/30/03	No	
Influent Screenings	11/30/03 1:27 P	Start: 1:28 P End: 1:33 P	[illegible]	11/30/03	No	
GRIT	11/30/03 1:38 P	Start: 1:39 P End: 1:44 P	[illegible]	11/30/03	No	
Secondary Screenings	11/30/03 1:48 P	Start: 1:49 P End: 1:54 P	[illegible]	11/30/03	No	
Effluent Screenings	11/30/03 1:09 P	Start: 1:10 P End: 1:15 P	[illegible]	11/30/03	No	

Honouliuli WWTP

Paint Filter Test

Month of Oct. 03 **for**

Sample Size: 100 g (for solid samples)

Directions: Place sample into paint filter. Allow sample to drain for 5 minutes into a graduated cylinder. If liquid is detected in the graduated cylinder, the sample contains FREE LIQUID.

Sample Type	Sample Date/Time	Start Time/ End Time	Sampled By	Date of Analysis	Results: Liquid Present? (Yes/No)	If Yes, Volume
TS ..ke	10-26-03 1:03 P	Start: 1:04 P End: 1:09 P	[illegible]	10-26-03	No	
Influent Screenings	10-26-03 1:12 P	Start: 1:13 P End: 1:18 P	[illegible]	10-26-03	No	
GRIT	10-26-03 1:24 P	Start: 1:25 P End: 1:30 P	[illegible]	10-26-03	No	
Secondary Screenings	10-26-03 1:35 P	Start: 1:36 P End: 1:41 P	[illegible]	10-26-03	No	
Effluent Screenings	10-26-03 1:44	Start: 1:45 P End: 1:50 P	[illegible]	10-26-03	No	

Honouliuli WWTP

Paint Filter Test

Month of Sept. 03 **for**

Sample Size: 100 g (for solid samples)

Directions: Place sample into paint filter. Allow sample to drain for 5 minutes into a graduated cylinder. If liquid is detected in the graduated cylinder, the sample contains FREE LIQUID.

Sample Type	Sample Date/Time	Start Time/ End Time	Sampled By	Date of Analysis	Results: Liquid Present? (Yes/No)	If Yes, Volume
TS ..ke	9-28-03 2:03	Start: 2:04 End: 2:09	Ah	9-28-03	No	
Influent Screenings	9-28-03 1:32	Start: 1:33 End: 1:38	Ah	9-28-03	No	
GRIT	9-28-03 1:20	Start: 1:21 End: 1:26	Ah	9-28-03	No	
Secondary Screenings	9-28-03 1:44	Start: 1:45 End: 1:50	Ah	9-28-03	No	
Effluent Screenings	9-28-03 1:54	Start:: 1:55 End: 2:00	Ah	9-28-03	No	

Honouliuli WWTP

Paint Filter Test for

Month of Aug. '03

Sample Size: 100 g (for solid samples)

Directions: Place sample into paint filter. Allow sample to drain for 5 minutes into a graduated cylinder. If liquid is detected in the graduated cylinder, the sample contains FREE LIQUID.

Sample Type	Sample Date/Time	Start Time/ End Time	Sampled By	Date of Analysis	Results: Liquid Present? (Yes/No)	If Yes, Volume
TS ake	8/26/03 7:58 PM	Start: 7:59 PM End: 8:04 PM	[illegible]	8/26/03	NO	
Influent Screenings	8/26/03 7:13 PM	Start: 7:14 PM End: 7:19 PM	[illegible]	8/26/03	NO	
GRIT	8/26/03 8:11 PM	Start: 8:13 PM End: 8:18 PM	[illegible]	8/26/03	NO	
Secondary Screenings	8/26/03 8:23 PM	Start: 8:24 PM End: 8:29 PM	[illegible]	8/26/03	NO	
Effluent Screenings	8/26/03 8:36 PM	Start:: 8:37 End: 8:42 PM	[illegible]	8/26/03	NO	

Honouliuli WWTP

Paint Filter Test

Month of July '03 **for**

Sample Size: 100 g (for solid samples)

Directions: Place sample into paint filter. Allow sample to drain for 5 minutes into a graduated cylinder. If liquid is detected in the graduated cylinder, the sample contains FREE LIQUID.

Sample Type	Sample Date/Time	Start Time/ End Time	Sampled By	Date of Analysis	Results: Liquid Present? (Yes/No)	If Yes, Volume
TS ke	7/20/03 12:34P	Start: 12:36 End: 12:41	[illegible]	7/20/03	NO	
Influent Screenings	7/20/03 12:52	Start: 12:53 End: 12:58	[illegible]	7/20/03	NO	
GRIT	7/20/03 1:10	Start: 1:12 End: 1:17	[illegible]	7/20/03	NO	
Secondary Screenings	7/20/03 1:00	Start: 1:01 End: 1:06	[illegible]	7/20/03	NO	
Effluent Screenings	7/20/03 1:21	Start: 1:23 End: 1:28	[illegible]	7/20/03	NO	

Honouliuli WWTP

Paint Filter Test for

Month of June '03

Sample Size: 100 g (for solid samples)

Directions: Place sample into paint filter. Allow sample to drain for 5 minutes into a graduated cylinder. If liquid is detected in the graduated cylinder, the sample contains FREE LIQUID.

Sample Type	Sample Date/Time	Start Time/ End Time	Sampled By	Date of Analysis	Results: Liquid Present? (Yes/No)	If Yes, Volume
TS ake	6-15-03 8:45AM	Start: 8:46 AM End: 8:51AM	[illegible]	6-15-03	NO	
Influent Screenings	6-15-03 8:57AM	Start: 8:59 AM End: 9:04AM	[illegible]	6-15-03	NO	
GRIT	6-15-03 9:09 AM	Start: 9:11AM End: 9:16AM	[illegible]	6-15-03	NO	
Secondary Screenings	6-15-03 9:20 AM	Start: 9:21AM End: 9:26AM	[illegible]	6-15-03	NO	
Effluent Screenings	6-15-03 9:31AM	Start:: 9:32AM End: 9:37AM	[illegible]	6-15-03	NO	

Honouliuli WWTP

Paint Filter Test for

Month of May 03

Sample Size: 100 g (for solid samples)

Directions: Place sample into paint filter. Allow sample to drain for 5 minutes into a graduated cylinder. If liquid is detected in the graduated cylinder, the sample contains FREE LIQUID.

Sample Type	Sample Date/Time	Start Time/ End Time	Sampled By	Date of Analysis	Results: Liquid Present? (Yes/No)	If Yes, Volume
TS ake	5-20-03 5:16 PM	Start: 5:51 End: 5:56	Ahe	5/20/03	NO	
Influent Screenings	5-20-03 4:50 PM	Start: 5:58 End: 6:03	Ahe	5/20/03	NO	
GRIT	5-20-03 5:13 PM	Start: 6:05 End: 6:10	Ahe	5/20/03	NO	
Secondary Screenings	5-20-03 5:18 PM	Start: 6:13 End: 6:18	Ahe	5/20/03	NO	
Effluent Screenings	5-20-03 5:22 PM	Start:: 6:20 End: 6:25	Ahe	5/20/03	NO	

Honouliuli WWTP

Paint Filter Test

Month of April 03 **for**

Sample Size: 100 g (for solid samples)

Directions: Place sample into paint filter. Allow sample to drain for 5 minutes into a graduated cylinder. If liquid is detected in the graduated cylinder, the sample contains FREE LIQUID.

Sample Type	Sample Date/Time	Start Time/ End Time	Sampled By	Date of Analysis	Results: Liquid Present? (Yes/No)	If Yes, Volume
TS ke	4-28-03 6:40 PM	Start: 6:41 End: 6:46	[illegible]	4-28-03	NO	
Influent Screenings	4-28-03 6:54 PM	Start: 6:56 PM End: 7:01 PM	[illegible]	4-28-03	NO	
GRIT	4-28-03 7:05 PM	Start: 7:07 PM End: 7:12 PM	[illegible]	4-28-03	NO	
Secondary Screenings	4-28-03 7:18 PM	Start: 7:19 PM End: 7:24 PM	[illegible]	4-28-03	NO	
Effluent Screenings	4-28-03 7:31 PM	Start: 7:33 PM End: 7:38 PM	[illegible]	4-28-03	NO	

Honouliuli WWTP

Paint Filter Test

Month of March '03

Sample Size: 100 g (for solid samples)

Directions: Place sample into paint filter. Allow sample to drain for 5 minutes into a graduated cylinder. If liquid is detected in the graduated cylinder, the sample contains FREE LIQUID.

Sample Type	Sample Date/Time	Start Time/ End Time	Sampled By	Date of Analysis	Results: Liquid Present? (Yes/No)	If Yes, Volume
TS ake	3/30/03 12:12 PM	Start: 12:13 PM End: 12:18 PM	[illegible]	3/30/03	NO	
Influent Screenings	3/30/03 12:24 PM	Start: 12:25 PM End: 12:30 PM	[illegible]	3/30/03	NO	
GRIT	3/30/03 12:37 PM	Start: 12:39 PM End: 12:44 PM	[illegible]	3/30/03	NO	
Secondary Screenings	3/30/03 12:49 PM	Start: 12:50 PM End: 12:55 PM	[illegible]	3/30/03	NO	
Effluent Screenings	3/30/03 1:03 PM	Start: 1:04 PM End: 1:09 PM	[illegible]	3/30/03	NO	

Honouliuli WWTP

Paint Filter Test

Month of Feb. '03 **for**

Sample Size: 100 g (for solid samples)

Directions: Place sample into paint filter. Allow sample to drain for 5 minutes into a graduated cylinder. If liquid is detected in the graduated cylinder, the sample contains FREE LIQUID.

Sample Type	Sample Date/Time	Start Time/ End Time	Sampled By	Date of Analysis	Results: Liquid Present? (Yes/No)	If Yes, Volume
TS ke	2/25/03 7:15 PM	Start: 7:16 PM End: 7:21 PM	Ahu	2/25/03	NO	
Influent Screenings	2/25/03 7:27 PM	Start: 7:28 PM End: 7:33 PM	Ahu	2/25/03	NO	
GRIT	2/25/03 7:37 PM	Start: 7:38 PM End: 7:43 PM	Ahu	2/25/03	NO	
Secondary Screenings	2/25/03 7:47 PM	Start: 7:48 PM End: 7:53 PM	Ahu	2/25/03	NO	
Effluent Screenings	2/25/03 7:59 PM	Start: 8:00 PM End: 8:05 PM	Ahu	2/25/03	NO	

Honouliuli WWTP

Paint Filter Test for

Month of Jan. '03

Sample Size: 100 g (for solid samples)

Directions: Place sample into paint filter. Allow sample to drain for 5 minutes into a graduated cylinder. If liquid is detected in the graduated cylinder, the sample contains FREE LIQUID.

Sample Type	Sample Date/Time	Start Time/ End Time	Sampled By	Date of Analysis	Results: Liquid Present? (Yes/No)	If Yes, Volume
TS Cake	8:55 AM 1/3/03	Start: 8:56AM End: 9:01	Ahe	1/3/03	NO	
Influent Screenings	9:06 AM 1/3/03	Start: 9:07 End: 9:12	Ahe	1/3/03	NO	
GRIT	9:16 AM 1/3/03	Start: 9:17 End: 9:22	Ahe	1/3/03	NO	
Secondary Screenings	9:26 AM 1/3/03	Start: 9:27 End: 9:32	Ahe	1/3/03	NO	
Effluent Screenings	9:38 AM 1/3/03	Start: 9:39 End: 9:44	Ahe	1/3/03	NO	

Environmental Laboratory of the Pacific

Date: *30-Jul-99*

ENT: Honouliuli Wastewater Treatment Plant
Lab Order: 9907060
Project:
Lab ID: 9907060-01D

Client Sample ID: Comp A,B,C
Tag Number:
Collection Date: 7/11/99
Matrix: SOLID

Analyses	Result	Reporting Limit	Units	Dilution Factor	Date Prepared	Date Analyzed	Batch ID	Analyst	Qual Notes
CORROSIVITY BY PH		**SW9045B**							
pH	*6.4*	0.010	pH Units	1	7/12/99	7/12/99	ORN2_990712A	MMM	
FLAMMABILITY		**ASTM D4982-89B**							
Flammability	*NEG*	0	Pos/Neg	1	7/15/99	7/15/99	WET_990715A	MMM	
FREE LIQUID		**SW9095**							
Free Liquid	*NEG*	0	Pos/Neg	1	7/21/99	7/21/99	WET_990721A	MMM	
HERBICIDES, TCLP LEACHED		**SW1311/8150**							
2,4,5-TP (Silvex)	ND	0.0050	mg/L	1	7/19/99	7/21/99	491	AS	
2,4-D	ND	0.0050	mg/L	1					
Surr: DCAA	64	40-140	%REC	1					
ICP METALS, TCLP LEACHED		**SW1311/6010A**							
Arsenic	ND	0.50	mg/L	1	7/16/99	7/16/99	483	TKL	
Barium	ND	1.0	mg/L	1					
Cadmium	ND	0.050	mg/L	1					
Chromium	ND	0.050	mg/L	1					
Lead	ND	0.20	mg/L	1					
Selenium	ND	0.50	mg/L	1					
Silver	ND	0.050	mg/L	1					
RCURY, TCLP LEACHED		**SW1311/7470**							
..rcury	ND	0.010	mg/L	1	7/16/99	7/19/99	481	KVE	
PESTICIDES, TCLP LEACHED		**SW1311/8080A**							
Chlordane	ND	0.0050	mg/L	1	7/16/99	7/28/99	482	AS	
Endrin	ND	0.00050	mg/L	1					
gamma-BHC	ND	0.00025	mg/L	1					
Heptachlor	ND	0.00025	mg/L	1					
Heptachlor epoxide	ND	0.00025	mg/L	1					
Methoxychlor	ND	0.0025	mg/L	1					
Toxaphene	ND	0.025	mg/L	1					
Surr: Decachlorobiphenyl	77	50-150	%REC	1					
Surr: Tetrachloro-m-xylene	53	50-150	%REC	1					

Qualifiers:

ND - Not Detected at the Reporting Limit
J - Analyte detected below quantitation limits
B - Analyte detected in the associated Method Blank
* - Value exceeds Maximum Contaminant Level
S - Spike Recovery outside accepted recovery limits
R - RPD outside accepted recovery limits
E - Value above quantitation range

Environmental Laboratory of the Pacific

Date: *30-Jul-99*

.ENT:	Honouliuli Wastewater Treatment Plant	Client Sample ID:	Comp A,B,C
Lab Order:	9907060	Tag Number:	
Project:		Collection Date:	7/11/99
Lab ID:	9907060-01D	Matrix:	SOLID

Analyses	Result	Reporting Limit	Units	Dilution Factor	Date Prepared	Date Analyzed	Batch ID	Analyst	Qual Notes
SEMIVOLATILES, TCLP LEACHED		**SW1311/8270A**							
1,4-Dichlorobenzene	ND	0.050	mg/L	1	7/16/99	7/16/99	479	AS	
2,4,5-Trichlorophenol	ND	0.050	mg/L	1					
2,4,6-Trichlorophenol	ND	0.25	mg/L	1					
2,4-Dinitrotoluene	ND	0.050	mg/L	1					
Cresols, Total	ND	0.050	mg/L	1					
Hexachlorobenzene	ND	0.050	mg/L	1					
Hexachlorobutadiene	ND	0.050	mg/L	1					
Hexachloroethane	ND	0.050	mg/L	1					
Nitrobenzene	ND	0.050	mg/L	1					
Pentachlorophenol	ND	0.050	mg/L	1					
Pyridine	ND	0.050	mg/L	1					
Surr: 2,4,6-Tribromophenol	97	10-123	%REC	1					
Surr: 2-Fluorobiphenyl	66	43-116	%REC	1					
Surr: 2-Fluorophenol	43	21-100	%REC	1					
Surr: 4-Terphenyl-d14	88	33-141	%REC	1					
Surr: Nitrobenzene-d5	65	35-114	%REC	1					
Surr: Phenol-d6	33	10-94	%REC	1					
LATILES, TCLP LEACHED		**SW1311/8260A**							
1,1-Dichloroethene	ND	0.0050	mg/L	1	7/30/99		072899	SUB	
1,2-Dichloroethane	ND	0.0050	mg/L	1					
1,4-Dichlorobenzene	ND	0.0050	mg/L	1					
2-Butanone	ND	0.010	mg/L	1					
Benzene	ND	0.0050	mg/L	1					
Carbon tetrachloride	ND	0.0050	mg/L	1					
Chlorobenzene	ND	0.0050	mg/L	1					
Chloroform	ND	0.0050	mg/L	1					
Tetrachloroethene	ND	0.0050	mg/L	1					
Trichloroethene	ND	0.0050	mg/L	1					
Vinyl chloride	ND	0.010	mg/L	1					
Surr: 1,2-Dichloroethane-d4	120	68-144	%REC	1					
Surr: 4-Bromofluorobenzene	120	72-140	%REC	1					
Surr: Dibromofluoromethane	97	76-133	%REC	1					
Surr: Toluene-d8	100	77-146	%REC	1					

Qualifiers:

ND - Not Detected at the Reporting Limit
J - Analyte detected below quantitation limits
B - Analyte detected in the associated Method Blank
* - Value exceeds Maximum Contaminant Level
S - Spike Recovery outside accepted recovery limits
R - RPD outside accepted recovery limits
E - Value above quantitation range

aal@torquoise.net
Att Elvia Yung

Advanced Technology Laboratories

Date: 08-Jan-04

CLIENT: Advanced Analytical Laboratory, LLC
Project: B441
Lab Order: 066505

Lab ID: 066505-001
Client Sample ID: 1
Collection Date: 12/29/2003
Matrix: SOIL

Analyte	Result	PQL	Qual	Units	DF	Date Analyzed
ICP METALS BY TCLP						
(EPA 3010A) flame				EPA 1311/ 6010B soil/mole		
RunID: ICP2_040106B	QC Batch: 16402			PrepDate	1/6/2004	Analyst: RQ
Arsenic	ND	0.10		mg/L	1	1/6/2004
Barium	0.45	0.10		mg/L	1	1/6/2004
Cadmium	ND	0.10		mg/L	1	1/6/2004
Chromium	ND	0.10		mg/L	1	1/6/2004
Lead	ND	0.10		mg/L	1	1/6/2004
Selenium	ND	0.10		mg/L	1	1/6/2004
Silver	ND	0.10		mg/L	1	1/6/2004
MERCURY BY TCLP						
(EPA 7470)				EPA 1311/ 7470A		
RunID: AA1_040106A	QC Batch: 16406			PrepDate	1/6/2004	Analyst: JT
Mercury	ND	0.20		µg/L	1	1/6/2004

Lab ID: 066505-002
Client Sample ID: 4
Collection Date: 12/29/2003
Matrix: SOIL

Analyte	Result	PQL	Qual	Units	DF	Date Analyzed
PH						
				EPA 9045C		
RunID: WETCHEM_040102B	QC Batch: R33869			PrepDate	1/2/2004	Analyst: MJM
pH	6.21	0.10		pH Units	1	1/2/2004

Lab ID: 066505-003
Client Sample ID: 5
Collection Date: 12/29/2003
Matrix: SOIL

Analyte	Result	PQL	Qual	Units	DF	Date Analyzed
PAINT FILTER						
				EPA 9095		
RunID: WETCHEM_040107C	QC Batch: R33946			PrepDate		Analyst: MJM
Free Liquid	absence		H		1	1/7/2004

Qualifiers:
ND - Not Detected at the Reporting Limit
J - Analyte detected below quantitation limits
B - Analyte detected in the associated Method Blank
* - Value exceeds Maximum Contaminant Level
S - Spike Recovery outside accepted recovery limits
R - RPD outside accepted recovery limits
E - Value above quantitation range
H-Sample exceeding holding time

Results are wet unless otherwise specified

Advanced Technology
3275 Walnut Avenue Signal Hill, CA 90755 Tel: 562 989-4045 Fax: 562 989-4040

Advanced Technology Laboratories

Date: 08-Jan-04

CLIENT: Advanced Analytical Laboratory, LLC
Project: B441
Lab Order: 066505

Lab ID: 066505-004
Client Sample ID: 6
Collection Date: 12/30/2003
Matrix: SOIL

Analyte	Result	PQL	Qual	Units	DF	Date Analyzed
FLASHPOINT				EPA 1010		
RunID: WETCHEM2_040106A	QC Batch: R33927			PrepDate		Analyst: MFP
Ignitability	>200	40		DEG F	1	1/6/2004

Qualifiers:
ND - Not Detected at the Reporting Limit
J - Analyte detected below quantitation limits
B - Analyte detected in the associated Method Blank
* - Value exceeds Maximum Contaminant Level
S - Spike Recovery outside accepted recovery limits
R - RPD outside accepted recovery limits
E - Value above quantitation range
H-Sample exceeding holding time

Results are wet unless otherwise specified

Advanced Technology 3275 Walnut Avenue Signal Hill, CA 90755 Tel: 562 989-4045 Fax: 562 989-4040

Advanced Analytical Laboratory
(425) 497-0110, fax (425) 497-8089

AAL Job Number: A40102-3
Client: Advanced Analytical Laboratory, LLC
Project Manager: Elisa Young
Client Project Name: Honoulull WWTP
Client Project Number: B441
Date received: 12/31/03

Analytical Results

TCLP 8260, µg/L		MTH BLK	LCS	2	Dupl 2	RPD 2
Matrix	Extract	Extract	Extract	Extract	Extract	Extract
Date analyzed	Reporting Limits	01/05/04	01/05/04	01/05/04	01/06/04	01/07/04
Dichlorodifluoromethane	1.0	nd		nd	nd	
Chloromethane	1.0	nd		nd	nd	
Vinyl chloride(*)	0.2	nd		nd	nd	
Bromomethane	1.0	nd		nd	nd	
Chloroethane	1.0	nd		nd	nd	
Trichlorofluoromethane	1.0	nd		nd	nd	
1,1-Dichloroethene	1.0	nd		nd	nd	
Methylene chloride	1.0	nd		nd	nd	
trans-1,2-Dichloroethene	1.0	nd		nd	nd	
1,1-Dichloroethane	1.0	nd		nd	nd	
2,2-Dichloropropane	1.0	nd		nd	nd	
cis-1,2-Dichloroethene	1.0	nd		nd	nd	
Chloroform	1.0	nd		nd	nd	
1,1,1-Trichloroethane	1.0	nd		nd	nd	
Carbontetrachloride	1.0	nd		nd	nd	
1,1-Dichloropropene	1.0	nd		nd	nd	
Benzene	1.0	nd	87%	1.6	1.4	14%
1,2-Dichloroethane(EDC)	1.0	nd		nd	nd	
Trichloroethene	1.0	nd	90%	nd	nd	
1,2-Dichloropropane	1.0	nd		nd	nd	
Dibromomethane	1.0	nd		nd	nd	
Bromodichloromethane	1.0	nd		nd	nd	
cis-1,3-Dichloropropene	1.0	nd		nd	nd	
Toluene	1.0	nd	99%	1.3	1.3	2%
trans-1,3-Dichloropropene	1.0	nd		nd	nd	
1,1,2-Trichloroethane	1.0	nd		nd	nd	
Tetrachloroethene	1.0	nd		nd	nd	
1,3-Dichloropropane	1.0	nd		nd	nd	
Dibromochloromethane	1.0	nd		nd	nd	
1,2-Dibromoethane (EDB)*	0.01	nd		nd	nd	
Chlorobenzene	1.0	nd	98%	nd	nd	
1,1,1,2-Tetrachloroethane	1.0	nd		nd	nd	
Ethylbenzene	1.0	nd		2.7	2.5	8%
Xylenes	1.0	nd		3.7	3.4	8%
Styrene	1.0	nd		nd	nd	
Bromoform	1.0	nd		nd	nd	
Isopropylbenzene	1.0	nd		nd	nd	
1,2,3-Trichloropropane	1.0	nd		nd	nd	
Bromobenzene	1.0	nd		nd	nd	

Advanced Analytical Laboratory
(425) 497-0110, fax (425) 497-8089

AAL Job Number: A40102-3
Client: Advanced Analytical Laboratory, LLC
Project Manager: Elisa Young
Client Project Name: Honouliuli WWTP
Client Project Number: B441
Date received: 12/31/03

Analytical Results

TCLP 8260, µg/L		MTH BLK	LCS	2	Dupl 2	RPD 2
Matrix	Extract	Extract	Extract	Extract	Extract	Extract
Date analyzed	Reporting Limits	01/05/04	01/05/04	01/05/04	01/06/04	01/07/04
1,1,2,2-Tetrachloroethane	1.0	nd		nd	nd	
n-Propylbenzene	1.0	nd		nd	nd	
2-Chlorotoluene	1.0	nd		nd	nd	
4-Chlorotoluene	1.0	nd		nd	nd	
1,3,5-Trimethylbenzene	1.0	nd		nd	nd	
tert-Butylbenzene	1.0	nd		nd	nd	
1,2,4-Trimethylbenzene	1.0	nd		nd	nd	
sec-Butylbenzene	1.0	nd		nd	nd	
1,3-Dichlorobenzene	1.0	nd		nd	nd	
Isopropyltoluene	1.0	nd		nd	nd	
1,4-Dichlorobenzene	1.0	nd		nd	nd	
1,2-Dichlorobenzene	1.0	nd		nd	nd	
n-Butylbenzene	1.0	nd		nd	nd	
1,2-Dibromo-3-Chloropropane	1.0	nd		nd	nd	
1,2,4-Trichlorobenzene	1.0	nd		nd	nd	
Hexachloro-1,3-butadiene	1.0	nd		nd	nd	
Naphthalene	1.0	nd		nd	nd	
1,2,3-Trichlorobenzene	1.0	nd		nd	nd	
*-Instrument detection limits						
Surrogate recoveries						
Dibromofluoromethane		95%	92%	95%	90%	
Toluene-d8		96%	100%	100%	100%	
1,2-Dichloroethane-d4		93%	94%	86%	93%	
4-Bromofluorobenzene		93%	97%	100%	103%	

Data Qualifiers and Analytical Comments
nd - not detected at listed reporting limits
Acceptable Recovery limits: 70% TO 130%
Acceptable RPD limit: 30%

Advanced Analytical Laboratory
(425) 497-0110, fax (425) 497-8089

AAL Job Number:	A40102-3
Client:	Advanced Analytical Laboratory, LLC
Project Manager:	Elisa Young
Client Project Name:	Honouliuli WWTP
Client Project Number:	B441
Date received:	12/31/03

Analytical Results

8082(PCBs), mg/kg		MTH BLK	LCS	3	Dupl 3
Matrix	Cardboard	Cardboard	Cardboard	Cardboard	Cardboard
Date extracted	Reporting	12/31/03	12/31/03	12/31/03	12/31/03
Date analyzed	Limits	12/31/03	12/31/03	12/31/03	12/31/03
A1221	5.0	nd		nd	nd
A1232	5.0	nd		nd	nd
A1242 (A1016)	5.0	nd		nd	nd
A1248	5.0	nd		nd	nd
A1254	5.0	nd		nd	nd
A1260	5.0	nd	79%	nd	nd

Surrogate recoveries:				
Tetrachloro-m-xylene	99%	94%	85%	86%
Decachlorobiphenyl	96%	88%	113%	114%

Data Qualifiers and Analytical Comments
nd - not detected at listed reporting limits
na - not analyzed
C - coelution with sample peaks
M - matrix interference
J - estimated value
Results reported on dry-weight basis
Acceptable Recovery limits: 70% TO 130%
Acceptable RPD limit: 30%

Advanced Analytical Laboratory
(425) 497-0110, fax (425) 497-8089

AAL Job Number:	A40102-3
Client:	Advanced Analytical Laboratory, LLC
Project Manager:	Elisa Young
Client Project Name:	Honouliuli WWTP
Client Project Number:	B441
Date received:	12/31/03

Analytical Results

TCLP 8270, µg/L		MTH BLK	LCS	2
Matrix	Extract	Extract	Extract	Extract
Date extracted	Reporting	01/07/04	01/07/04	01/07/04
Date analyzed	Limits	01/07/04	01/07/04	01/07/04
Penatchloroethane	2.0	nd		18
Phenol	2.0	nd		nd
2-Chlorophenol	2.0	nd	102%	nd
Bis (2-chloroethyl) ether	2.0	nd		nd
1,3-Dichlorobenzene	2.0	nd	103%	nd
1,4-Dichlorobenzene	2.0	nd	93%	nd
1,2-Dichlorobenzene	2.0	nd		nd
2-Methylphenol (o-cresol)	2.0	nd		8.0
Bis (2-chloroisopropyl) ether	2.0	nd		nd
3,4-Methylphenol (m,p-cresol)	2.0	nd		nd
2-Nitrophenol	10	nd		nd
2,4-Dimethylphenol	10	nd		nd
Bis (2-chloroethoxy) methane	2.0	nd		nd
2,4-Dichlorophenol	10	nd		nd
1,2,4-Trichlorobenzene	2.0	nd	115%	nd
Naphthalene	0.1	nd		nd
2,6-Dichlorophenol	10	nd		nd
Hexachloropropylene	10	nd		nd
Hexachlorobutadiene	10	nd		nd
4-Chloro-3-methylphenol	10	nd	96%	nd
1,2,4,5-Tetrachlorobenzene	2.0	nd		nd
Hexachlorocyclopentadiene	2.0	nd		nd
2,4,6-Trichlorophenol	10	nd		nd
2,4,5-Trichlorophenol	10	nd		nd
2-Chloronaphthalene	2.0	nd		nd
Dimethylphthalate	2.0	nd		nd
Acenaphthylene	0.1	nd		nd
Acenaphthene	0.1	nd	103%	nd
2,4-Dinitrophenol	10	nd		nd
4-Nitrophenol	10	nd		nd
Pentachlorobenzene	2.0	nd		nd
2,3,4,6-Tetrachlorophenol	2.0	nd		nd
Fluorene	0.1	nd		nd

Advanced Analytical Laboratory
(425) 497-0110, fax (425) 497-8089

AAL Job Number:	A40102-3
Client:	Advanced Analytical Laboratory, LLC
Project Manager:	Elisa Young
Client Project Name:	Honouliuli WWTP
Client Project Number:	B441
Date received:	12/31/03

Analytical Results

TCLP 8270, µg/L		MTH BLK	LCS	2
Matrix	Extract	Extract	Extract	Extract
Date extracted	Reporting	01/07/04	01/07/04	01/07/04
Date analyzed	Limits	01/07/04	01/07/04	01/07/04
Diethylphthalate	10	nd		nd
4-Chlorophenylphenylether	2.0	nd		nd
N-Nitrosodiphenylamine	2.0	nd		nd
4-Bromophenylphenylether	2.0	nd		nd
Hexachlorobenzene	2.0	nd		nd
Pentachlorophenol	10	nd	83%	nd
Phenanthrene	0.1	nd		nd
Anthracene	0.1	nd		nd
2-sec-Butyl-4,6-dinitrophenol	10	nd		nd
Di-n-butylphthalate	2.0	nd		nd
Fluoranthene	0.1	nd		nd
Pyrene	0.1	nd	104%	nd
Butylbenzylphthalate	10	nd		nd
Benzo(a)anthracene	0.1	nd		nd
Chrysene	0.1	nd		0.60
Bis (2-ethylhexyl) ether	2.0	nd		nd
Di-n-octylphthalate	10	nd		nd
Benzo(b)fluoranthene	0.1	nd		nd
Benzo(k)fluoranthene	0.1	nd		nd
Benzo(a)pyrene	0.1	nd		nd
Dibenzo(a,h)anthracene	0.1	nd		nd
Benzo(ghi)perylene	0.1	nd		nd
Indeno(1,2,3-cd)pyrene	0.1	nd		nd

Surrogate recoveries

Nitrobenzene-d5	117%	113%	130%
2-Fluorobiphenyl	107%	122%	C
4-Terphenyl-d14	129%	116%	C

Data Qualifiers and Analytical Comments

nd - not detected at listed reporting limits
Acceptable Recovery limits: 70% TO 130%
Acceptable RPD limit: 30%