U.S. ENVIRONMENTAL PROTECTION AGENCY
REGION IX

STATEMENT OF BASIS AND
AMBIENT AIR QUALITY IMPACT REPORT

For a Clean Air Act
Prevention of Significant Deterioration Permit

Sierra Pacific Industries-Anderson
PSD Permit Number SAC 12-01

September 2012

This page left intentionally blank

PROPOSED PREVENTION OF SIGNIFICANT DETERIORATION PERMIT
SPI - Anderson
Statement of Basis and Ambient Air Quality Impact Report
(PSD Permit SAC 12-01)

Table of Contents

Executive Summary 1
1. Purpose of this Document 2
2. Applicant 2
3. Project Location 2
4. Project Description 3
5. Emissions from the Proposed Project 7
6. Applicability of the Prevention of Significant Deterioration Regulations 8
7. Best Available Control Technology 9
   7.1. BACT for a New Boiler at a Lumber Facility 11
      7.1.1. Oxides of Nitrogen 11
      7.1.2. Carbon Monoxide 16
      7.1.3. Particulate Matter- PM, PM_{10}, $PM_{2.5}$ 19
   7.2 BACT for Emergency Engine 22
   7.3. BACT for Cooling Towers 24
8. Air Quality Impacts 26
   8.1 Introduction 26
      8.1.1 Overview of PSD Air Impact Requirements 26
      8.1.2 Identification of SPI- Anderson Modeling Documentation 27
   8.2. Background Ambient Air Quality 28
   8.3 Modeling Methodology for Class II areas 29
      8.3.1 Model selection 29
      8.3.2 Meteorology model inputs 29
      8.3.3 Land characteristics model inputs 29
      8.3.4 Model receptors 30
      8.3.5 Stack parameter model inputs 30
      8.3.6 Good Engineering Practice (GEP) Analysis 31
   8.4 National Ambient Air Quality Standards (NAAQS) and PSD Class II Increment Consumption Analysis 31
      8.4.1 Pollutants with significant emissions 31
      8.4.2 Preliminary analysis: Project-only impacts (Normal Operations and Startup) 32
      8.4.3 Cumulative impact analysis 33
   8.5 Class I Area Analysis 38
      8.5.1 Air Quality Related Values 38
      8.5.2 Class I Increment Consumption Analysis 39
9. Additional Impact Analysis 40
   9.1 Soils and Vegetation 40

9.2 Visibility Impairment 43
9.3 Growth 44
10. Endangered Species 45
11. Environmental Justice Screening Analysis 45
12. Clean Air Act Title V (Operating Permit) 46
13. Comment Period, Procedures for Public Hearing
Requests, Final Decision, and EPA Contact 46
14. Conclusion and Proposed Action 48
Appendix A 49

Acronyms & Abbreviations

AAQIR	Ambient Air Quality Impact Report
ACC	Air Cooled Condenser
Act	Clean Air Act [42 U.S.C. Section 7401 et seq.]
Agency	U.S. Environmental protection Agency
AQRV	Air Quality Related Value
BACT	Best Available Control Technology
BDT	Bone Dry Tons
BTU	British thermal units
CAA	Clean Air Act [42 U.S.C. Section 7401 et seq.]
CBI	Confidential Business Information
CEMS	Continuous Emissions Monitoring System
CFR	Code of Federal Regulations
CO	Carbon Monoxide
EPA	U.S. Environmental protection Agency
ESA	Endangered Species Act
FLM	Federal Land Manager
FWS	U.S. Fish and Wildlife Service
GAQM	40 CFR part 51, Appendix W- *Guideline on Air Quality Models*
GEP	Good engineering practice
hp	Horsepower
HRSG	Heat Recovery Steam Generator
kW	kilowatt
m	meter
MMBTU	Million British thermal units
MW	Megawatts of electrical power
NAAQS	National Ambient Air Quality Standards
NLCD92	USGS 1992 National Land Cover
NO	Nitrogen oxide or nitric oxide
NO_2	Nitrogen dioxide
NO_x	Oxides of Nitrogen ($NO + NO_2$)
NP	National park
NSPS	New Source performance Standards, 40 CFR part 60
NSR	New Source Review
PM	Total particulate Matter
$PM_{2.5}$	Particulate Matter less than 2.5 micrometers (μm) in diameter
PM_{10}	Particulate Matter less than 10 micrometers (μm) in diameter
ppb	parts per billion
ppm	parts per million
PSD	Prevention of Significant Deterioration
PTE	potential to emit
RBLC	U.S. EPA RACT/BACT/LAER Information Clearinghouse
SCAQMD	Shasta County Air Quality Management District

SCFM	Standard Cubic Feet per Minute
SIA	Significant Impact Area
SIL	Significant Impact Level
SO_2	Sulfur Dioxide
SO_x	Oxides of Sulfur
SPI	Sierra pacific Industries
tpy	tons per year
USGS	United States Geological Survey
WA	Wilderness Area

Proposed Prevention of Significant Deterioration (PSD) Permit Statement of Basis and Ambient Air Quality Impact Report

SPI- Anderson

Executive Summary

Sierra Pacific Industries (SPI) has applied for an approval to construct a new cogeneration unit capable of generating approximately 31 megawatts (MW) of electricity by combusting clean cellulosic biomass during normal operation and natural gas for startup and shutdown. The cogeneration unit will be constructed within the physical boundaries of the current SPI- Anderson Division facility location. The facility is located at 19758 Riverside Avenue in Anderson, California 96007 (Assessor's parcel No. 050-110-025). The proposed major Prevention of Significant Deterioration (PSD) permit modification is consistent with the requirements of the PSD program for the following reasons:

- The proposed permit requires the Best Available Control Technology (BACT) for Oxides of Nitrogen (NO_x), Carbon Monoxide (CO), Total Particulate Matter (PM), Particulate Matter under 10 micrometers (μm) in diameter (PM_{10}) and Particulate Matter under 2.5 μm in diameter ($PM_{2.5}$);

- The proposed emission limits will protect the National Ambient Air Quality Standards (NAAQS) for NO_2, CO, PM_{10} and $PM_{2.5}$. There is no NAAQS set for Total Particulate Matter (PM);

- The facility will not adversely impact soils and vegetation, or air quality, visibility, and deposition in Class I areas, which are parks or wilderness areas given special protection under the Clean Air Act (CAA);

- After informal consultation with the U.S. Fish and Wildlife Service under Section 7 of the Endangered Species Act, EPA has concluded that the proposed modification will have no likely adverse effect on any Federally-listed endangered or threatened species or designated critical habitat in the project's impact area.

1. Purpose of this Document

This document serves as the Statement of Basis and Ambient Air Quality Impact Report for the proposed PSD permit modification for the SPI– Anderson facility. This document describes the legal and factual basis for the proposed permit, including requirements under the PSD regulations at Title 40 of the Code of Federal Regulations (CFR) §52.21. This document also serves as the fact sheet to meet the requirements of 40 CFR Part 124.7 and 124.8.

2. Applicant

Sierra Pacific Industries
P.O. Box 496028
Redding, CA 96049-6028

3. Project Location

The proposed location for the modification of the SPI- Anderson facility will be within the physical footprint of the current facility location. The facility is located at 19758 Riverside Avenue in Anderson, California 96007 (Assessor's parcel No. 050-110-025). The site is approximately 0.5 mile west of Interstate 5, and approximately 2 miles north of the city of Anderson. The facility is bordered on the northeast by the Sacramento River, on the northwest by a private parcel, on the southwest by Union Pacific Railroad tracks and State Route (SR) 273, and on the southeast by private parcels. The city of Anderson is located within the jurisdiction of the Shasta County Air Quality Management District (SCAQMD).

The map on the following page shows the approximate location of SPI- Anderson.

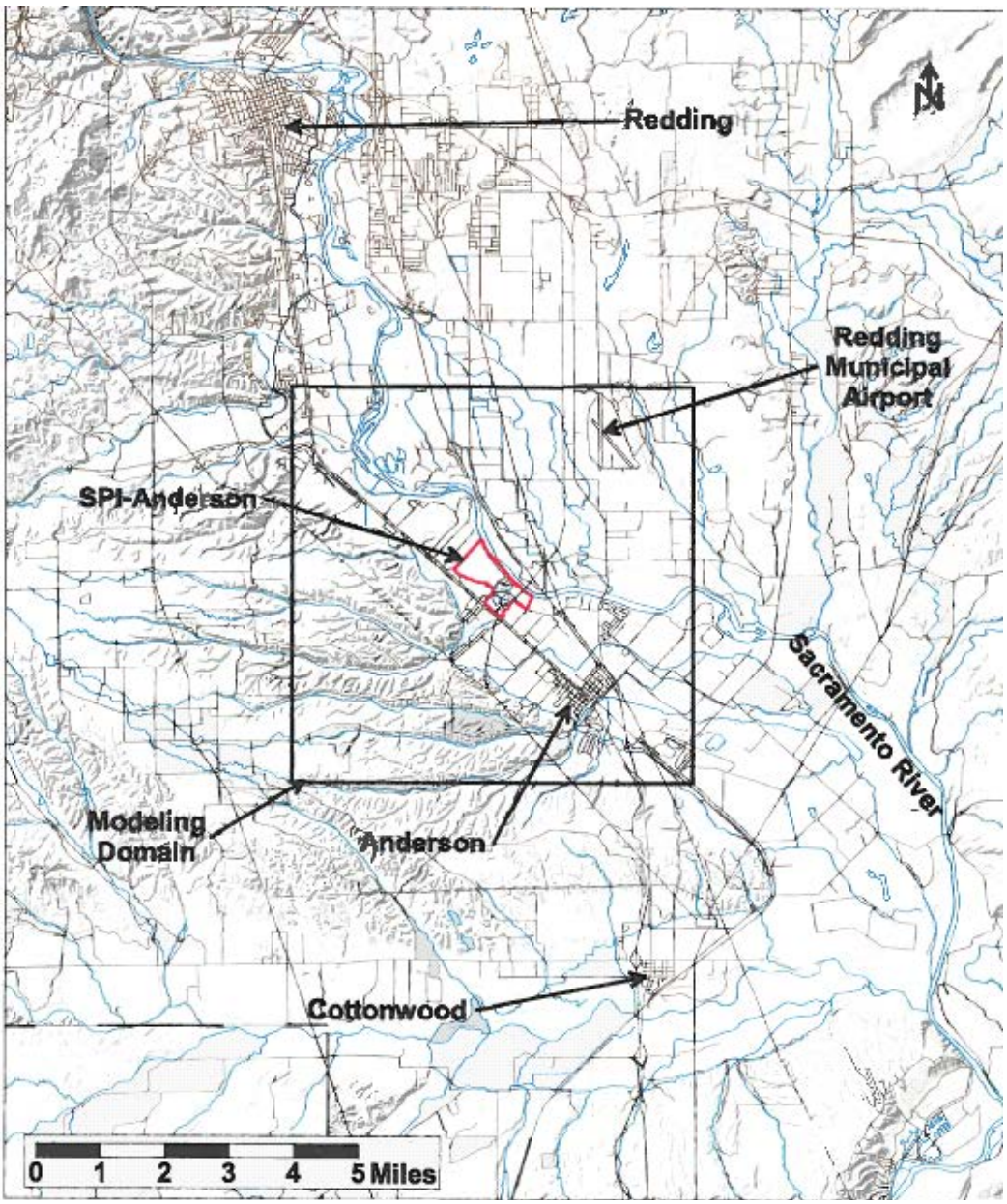

4. Project Description

SPI has applied for an approval to construct and operate a new cogeneration unit capable of generating 31 MW of gross electrical output from the combustion of clean cellulosic biomass and natural gas.

The original PSD permit for this lumber manufacturing facility was issued in 1994 by the Shasta County Air Quality Management District (SCAQMD). The site currently contains a wood-fired boiler with associated air pollution control equipment and conveyance systems that produces steam to dry lumber in existing kilns. On March 3, 2003 USEPA revoked and rescinded SCAQMD's authority to issue and modify federal PSD permits for

new and modified major sources of attainment pollutants in Shasta County. Therefore, EPA is modifying the PSD permit issued by SCAQMD to incorporate the proposed modifications.

A new cogeneration unit equipped with a stoker boiler is being proposed in order to burn additional clean cellulosic biomass fuel. Fuel will be generated on site from the lumber operations and delivered from other fuel sources to produce roughly 250,000 pounds per hour of steam. This steam be used to dry lumber in existing kilns for the lumber operation, as well as feed a turbine that will drive a generator to produce electricity for use on site or for sale to the electrical grid. A closed-loop two-cell cooling tower will be used to dispose of waste heat from the steam turbine.

Currently, the Anderson lumber operation produces approximately 160,000 bone dry tons (BDT) of wood waste per year. Approximately 60,000 BDT are consumed by the existing cogeneration unit, 20,000 BDT are trucked to other biomass power plants, and the roughly 80,000 BDT balance is trucked to other markets (e.g. wood chips to pulp mills). The new proposed boiler will have the capacity to consume a maximum of 219,000 BDT per year. Roughly 80,000 BDT will be generated by the facility's existing lumber operations at its current output, additional wood fuel will be transported by truck to the facility from SPI's other lumber operations in California.

The following page contains a design draft and a simplified process flow diagram for the proposed boiler.

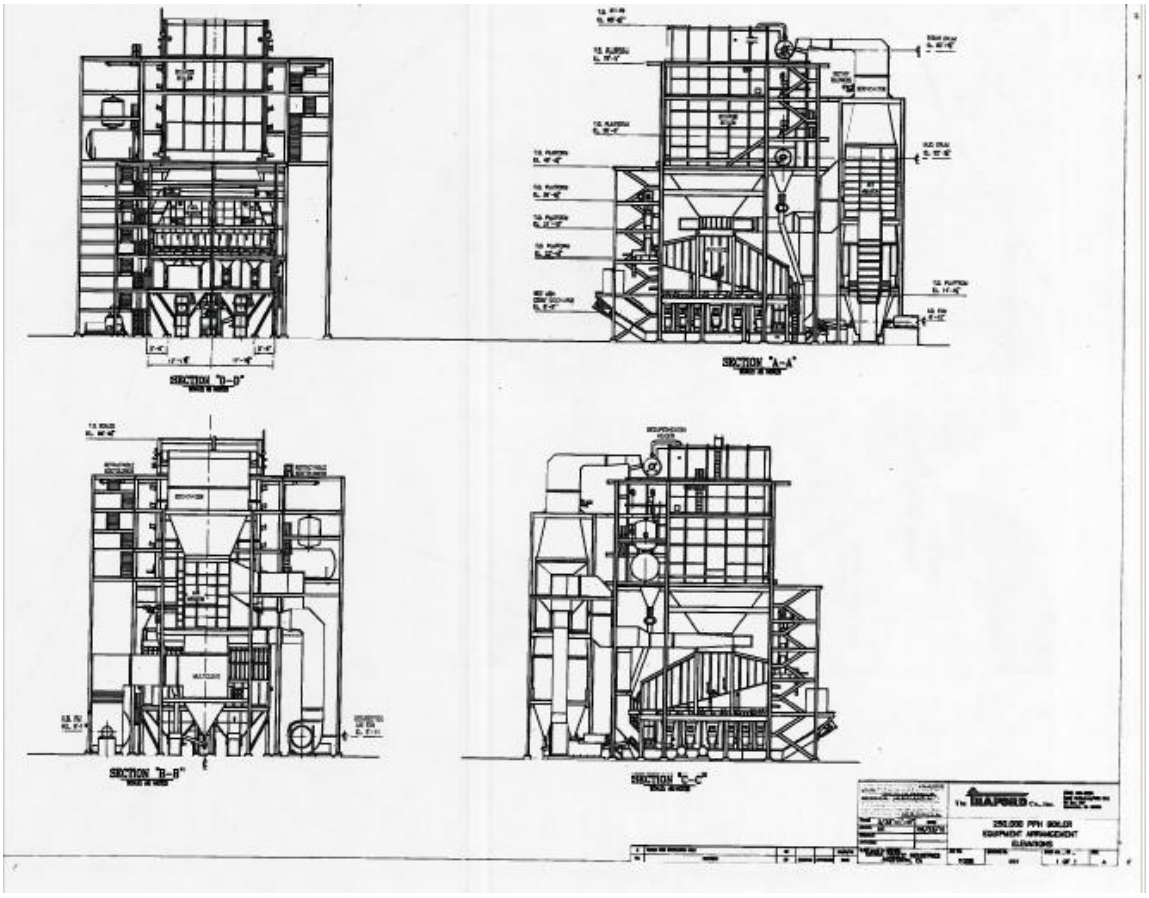

Air Pollution Control

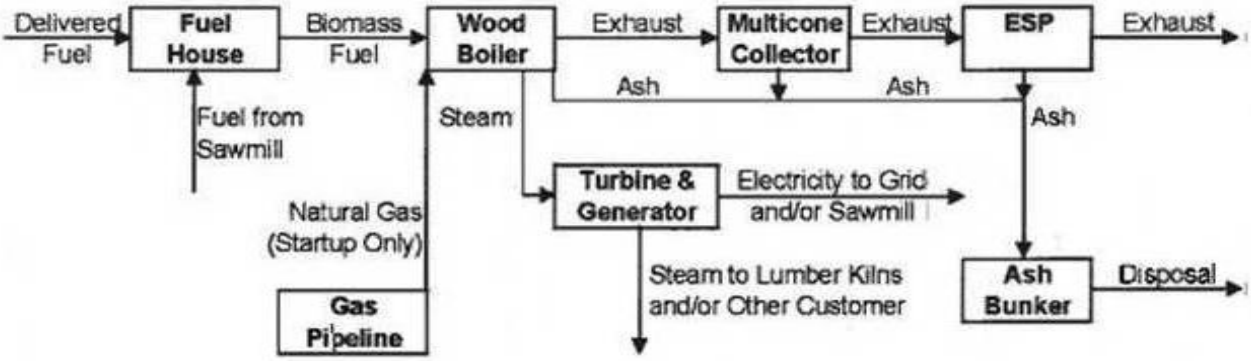

SPI- Anderson will employ several air pollution control alternatives to reduce the emissions of some criteria pollutants from the proposed new boiler. Selective Non-catalytic Reduction (SNCR) will be used to reduce NO_x emissions. Ammonia will be introduced into the furnace at the appropriate temperature window in order to most effectively decrease NO_x emissions. To reduce particulate matter (PM) emissions, SPI will use an electrostatic precipitator (ESP) preceded by a multiclone.

Permitted Equipment

Table 4-1 lists the proposed new equipment that will be regulated by this PSD permit:

Table 4-1: Proposed New Equipment List

Stoker Boiler with Vibrating Grate	• Biomass-fired with natural gas burners for start-up and shutdown • Maximum annual average heat input of 468 MMBtu/hr and steam generation rate of 250,000 lbs/hr • Equipped with two natural gas burners, each with a maximum rated heat input of 62.5 MMBtu/hr • Equipped with SNCR system to reduce nitrogen oxides, and multiclone with ESP to control PM emissions
Emergency Engine	• 256 hp at 1,800 rpm • Used to run the emergency boiler recirculation pump • Natural-gas fired
Cooling Tower	• Composed of two-cells with an expected water load of 4.24 gallons per minute per square foot.

Table 4-2 lists the existing equipment that is not included in this PSD permit. The equipment listed below is permitted by SCAQMD, and Table 4-2 is provided for reference purposes only.

Table 4-2: Existing Equipment List

Wellons Stoker Boiler	• Biomass-fired with natural gas burners for start-up • Maximum annual average heat input of approximately 116.4 MMBtu/hr • Equipped with SNCR system to reduce nitrogen oxides, and multiclone with ESP to control PM emissions • Equipped with one 30,400 ft^3 fuel storage bin, 2 hog fuel bins, 2 wood chip fuel bins
Conveyance System	• 2 Cyclones with combined flow rate of 51.004 scfm • 1 7,118 ft^2 MAC pulse Jet Baghouse with 300hp Blower • 1 35" x 45" Rotary Airlock • 1 Buhler en-masse, 19", 22tph Conveyor • 2 Overhead Storage Bins with enclosed sides
Spray Unit	• Closed loop unit equipped with integrated, negative pressure, mist collection system and 65' exhaust stack
Wood Chip Loading Facility	• 1 platform truck dumper • 1 Wood chip conveying system with dust containment hood • 1 200 hp Rader blower
7 De-greasing Tanks	• Non-solvent based
Gasoline Storage Tank	• Above ground with 10,000 gallon capacity
Painting Operation	

5. Emissions from the Proposed Project

The PSD program is intended to protect air quality in "attainment areas", which are areas that meet the National Ambient Air Quality Standards (NAAQS). Table 5-1 describes which pollutants are covered by the PSD program within the SCAQMD. The U.S. EPA is responsible for issuing PSD permits for pollutants in attainment with the NAAQS in the SCAQMD. As illustrated in Table 5-1, SCAQMD is attainment/ unclassifiable for each NAAQS,

Table 5-1: NAAQS Attainment Status for SCAQMD

Pollutant	Attainment Status	Permit program
Lead (Pb)	Attainment	PSD
Nitrogen Dioxide (NO_2)	Attainment	PSD
Sulfur Dioxide (SO_2)	Attainment	PSD
Carbon Monoxide (CO)	Attainment	PSD
Sulfuric Acid Mist (H_2SO_4)	n/a[1]	PSD
Particulate Matter (PM)	n/a[1]	PSD
Particulate Matter under 2.5 micrometers diameter ($PM_{2.5}$)	Attainment	PSD
Particulate matter under 10 micrometers diameter (PM_{10})	Attainment	PSD
Ozone	Attainment	PSD
Greenhouse Gases (GHG)	n/a[1]	PSD

The PSD program (40 CFR 52.21) applies to "major" new sources of attainment pollutants or “major modifications” at existing major sources of attainment pollutants. SPI- Anderson is an existing PSD major source proposing to modify its existing PSD permit in order to construct the equipment detailed in Table 4-1.

6. Applicability of the Prevention of Significant Deterioration Regulations

The estimated emissions in Table 4 shows that the proposed construction will be a major modification for NO_x, CO, PM, PM_{10} and $PM_{2.5}$. The annual emission data in Table 6-1 are based on the applicant’s maximum expected emissions, including emissions from startup and shutdown cycles. The applicant assumes that all emissions of PM are of diameter less than 2.5 microns ($PM_{2.5}$), which is a conservative estimate as some particulate emissions may be much larger than 2.5 micrometers in diameter.

Once a modification to an existing major stationary source is considered a major modification for a PSD pollutant, PSD also applies to any other regulated pollutant that is emitted in a significant amount. For our PSD applicability determination we are conservatively assuming that all sulfur oxide emissions are sulfur dioxide (SO_2). The data in Table 6-1 show that emissions of SO_2, volatile organic compounds (VOC), sulfuric acid (H_2SO_4) and lead (Pb) will be less than the significant emission rate. Therefore, PSD does not apply for SO_2, VOC, H_2SO_4 and Pb. Total estimated emissions of the PSD-regulated pollutants resulting from the emission units in this modification are listed in Table 6-1.

[1] There is no national ambient air quality standard (NAAQS) for PM, H_2SO_4 or GHG. However, in addition to other pollutants for which no NAAQS have been set, PM, H_2SO_4 and GHG are listed as regulated pollutants with a defined applicability threshold under the PSD regulations (40 CFR 52.21).

Table 6-1: Estimated Emissions and BACT Applicability[2]

Pollutant	Estimated Annual Emissions (tpy)	Significant Emission Rate (tpy)	Does BACT apply?
CO	472	100	Yes
NO_x	267	40	Yes
PM	42.1	25	Yes
PM_{10}	42.1	15	Yes
$PM_{2.5}$	42.1	10	Yes
VOC	34.9	40	No
SO_2	10.3	40	No
H_2SO_4	4.2	7	No
Lead	0.03	0.6	No
CO_2e	420,137 (Total) 38,379 (nondeferred)	CO2e: 75,000 (subject to regulation) Mass: 0 (significant)	No[3]

7. Best Available Control Technology

This chapter describes the Best Available Control Technology (BACT) for the control of CO, NO_x, PM, PM_{10} and $PM_{2.5}$ emissions from this facility. Section 169(3) of the CAA defines BACT as follows:

> "The term 'best available control technology' means an emission limitation based on the maximum degree of reduction of each pollutant subject to regulation under the Clean Air Act emitted from or which results from any major emitting facility, which the permitting authority, on a case-by-case basis, taking into account energy, environmental, and economic impacts and other costs, determines is achievable through application of production processes and available methods, systems, and techniques, including fuel cleaning or treatment or innovative fuel combustion techniques for control of each such pollutant. In no event shall application of BACT result in emissions of any pollutants which will exceed the emissions allowed by any applicable standard established pursuant to section 111 (NSPS) or 112 (NESHAPS) of the Clean Air Act."

[2] Annual emissions estimates differ from the PSD Application submission by SPI and Environ. EPA calculated annual emissions estimates at worst case annual heat input of 468 MMBtu/hr, not 425 MMBtu/hr, and the CO BACT limit was revised to 0.23 lb/MMBtu. (See SPI Annual Emissions Memo to file)

[3] Although the proposed modification identifies an increase in GHG emissions that exceeds the "subject to regulation" threshold of 75,000 tpy CO_2e and GHG significance rate of 0 tpy, EPA's *Deferral for CO_2 emissions from Bioenergy and Other Biogenic Sources under the Prevention of Significant Deterioration and Title V programs* (76 FR 43490 July 20, 2011) applies to this project. Since the non-deferred GHG emissions for this project are 38,252 tpy CO_2e, the modification is not subject to BACT for GHG. See Appendix A for relevant emissions calculations and further discussion.

In accordance with 40 CFR 52.21(j), a new major stationary source is required to apply BACT for each regulated NSR pollutant for which its PTE exceeds significance thresholds. BACT is defined as "an emission limitation (including a visible emission standard) based on the maximum degree of reduction of each pollutant subject to regulation under the Act ... which the Administrator, on a case-by-case basis, taking into account energy, environmental, and economic impacts, and other costs, determines is achievable for such source." BACT must be at least as stringent as any applicable New Source Performance Standards (NSPS) under 40 CFR Part 60 or National Emission Standard for Hazardous Air Pollutants (NESHAP) under 40 CFR Part 61. EPA outlines the process it will use to do this case-by-case analysis (referred to as "top-down" BACT analysis) in a June 13, 1989 memorandum. The top-down BACT analysis is a well established procedure that the Environmental Appeals Board (EAB) has consistently followed in adjudicating PSD permit appeals. See, e.g., In re Knauf, 8 E.A.D. 121, 129-31 (EAB 1999); In re Maui Electric, 8 E.A.D. 1, 5-6 (EAB 1998).

In brief, the top-down process requires that all available control technologies be ranked in descending order of control effectiveness. The PSD applicant first examines the most stringent technology. That technology is established as BACT unless it is demonstrated that technical considerations, or energy, environmental, or economic impacts justify a conclusion that the most stringent technology is not achievable for the case at hand. If the most stringent technology is eliminated, then the next most stringent option is evaluated until BACT is determined. The top-down BACT analysis is a case-by-case exercise for the particular source under evaluation. In summary, the five steps involved in a top-down BACT evaluation are:

1. Identify all available control options with practical potential for application to the specific emission unit for the regulated pollutant under evaluation;

2. Eliminate technically infeasible technology options;

3. Rank remaining control technologies by control effectiveness;

4. Evaluate the most effective control alternative and document results; if top option is not selected as BACT, evaluate next most effective control option; and

5. Select BACT, which will be the most stringent technology not rejected based on technical, energy, environmental, and economic considerations.

BACT is required for NO_x, CO, PM, PM_{10}, and $PM_{2.5}$ for the new proposed emission units. Table 7-1 lists the BACT determinations for NO_x, CO, PM, PM_{10}, and $PM_{2.5}$ from the proposed boiler and emergency engine, and PM, PM_{10}, and $PM_{2.5}$ from the cooling tower. For the purposes of this determination, all NO_x emissions will be treated as NO_2.

Table 7-1: Summary of BACT Limits[4]

Unit	NO_x	CO	PM	PM_{10}	$PM_{2.5}$
Boiler (468 MMBtu/hr)	0.15 lb/MMBtu (3-hour block average) 0.13 lb/MMBtu (12-month rolling average)	0.23lb/MMBtu (3-hour block average)	0.02 lb/MMBtu (3-hour block average)	0.02 lb/MMBtu (3-hour block average)	0.02 lb/MMBtu (3-hour block average)
Emergency Engine (256 hp)	0.8 lb/hr (hourly average)	6.11 lb/hr (hourly average)	0.03 lb/hr (hourly average)	0.03 lb/hr (hourly average)	0.03 lb/hr (hourly average)
Cooling tower	n/a	n/a	0.251 lb/hr, (hourly average)	0.251 lb/hr, (hourly average)	0.251 lb/hr (hourly average)

7.1. BACT for a New Boiler at a Lumber Facility

The SPI- Anderson facility will install and operate a new boiler to support lumber operations at the sawmill and to sell electricity to the grid. The new boiler will have a maximum heat input capacity of 468 MMBtu/hr. The boiler is subject to BACT for NO_x, CO, PM, PM_{10}, and $PM_{2.5}$. A top-down BACT analysis for each pollutant has been performed and is summarized below.

7.1.1. Oxides of Nitrogen

NO_x is formed at high temperatures during combustion when nitrogen in the combustion air or bound in the fuel combines with oxygen to form NO. Depending on conditions in the exhaust stream, some portion of the NO will react to form NO_2. For the purposes of this analysis and the permit, all NO_x is assumed to form NO_2.

Step 1 - Identify All Control Technologies

A number of existing boiler designs support the combustion of biomass for purpose of electricity generation of this megawatt capacity. Therefore, in identifying all possible control technologies, the BACT analysis will initially begin with the discussion of two boiler design alternatives.

A significant distinction in boiler design for this purpose can be characterized by the biomass combustion process that occurs within the boiler's combustion chamber. Biomass boilers can be classified as either being stoker or fluidized bed. *Stoker boiler* means a boiler unit consisting of a mechanically operated fuel-feeding mechanism which includes a stationary or moving grate to support the burning of fuel and admit under-grate air to the fuel, an overfire air system to complete combustion, and an ash discharge system. This definition of stoker includes air swept stokers. *Fluidized bed boiler* means a boiler utilizing a fluidized bed combustion process that is not a pulverized coal boiler. *Fluidized bed combustion* means a process where a fuel is burned in a bed of granulated particles, which are maintained in a mobile suspension by the forward flow of air and combustion products.

Boiler design technologies include, but are not limited to, the following:

[4] SPI- Anderson must keep all records of all testing, fuel use, and fuel testing requirements for a period of five (5) years and must report excess emissions to EPA on a semiannual basis.

- Stoker- including vibrating, traveling grate, etc.
- Fluidized bed- including pressurized or atmospheric, such as bubbling bed, circulating, etc.

In addition to the boiler design, the available inherent NO_x control technology includes:
- Good combustion practices

In addition to the inherent available control technology, the add-on NO_x control technologies include:
- Dry Low-NO_x burner (DLN)
- Selective non-catalytic reduction (SNCR)
- Selective Catalytic Reduction (SCR)
- Regenerative SCR (RSCR)
- SCR Variants
- EMxTM system (formerly SCONOx)

Step 2 – Eliminate Technically Infeasible Options

Boiler Design Alternatives

For the proposed boiler to service SPI- Anderson's existing primary lumber business and consume the wood from SPI's other locations, the proposed boiler design must be able to reliably operate under various conditions. Furthermore, SPI has not entered a binding power purchasing agreement with consistent base load electricity demand. With daily variations in renewable energy demand and the sawmill's steam requirements, the new boiler at the Anderson facility may have to vary steam production between 20% and 100% of full load capacity. If electricity demand decreases or the turbine and/or generator malfunction, the boiler may need to significantly reduce the amount of steam it generates.

However, periods of reduced steam demand do not necessarily coincide with reduced sawmill requirements. If other pieces of the cogeneration unit are not operating, and the boiler cannot reduce steam output, then the boiler must be shut down, rendering some of the lumber-drying kilns inoperable. If the kilns are unable to operate, lumber cannot be dried and the existing lumber facility may be unable to function normally. Moreover, as the modification will not expand beyond the current physical footprint of the SPI-Anderson facility, the space for stockpiling wood may be exhausted while the kilns are inoperable, thus causing portions of the sawmill to be shut down. Therefore, any boiler chosen for the proposed modification must reliably function at low steam-load conditions in order to accommodate SPI- Anderson's existing lumber operation.

The proposed boiler at the SPI- Anderson facility must be guaranteed to reliably operate at steam loads ranging from 50,000 lbs/hr to 250,000 lbs/hr. This variability in projected steam output is also caused by uncertainty in biomass fuel moisture and the variety of wood products and trimmings produced by SPI's other nearby facilities. As Environ, SPI's project consultant, stated in its January 23, 2012 letter[5], "…several examples of

[5] Albright, Eric "Supplemental Control Technology Analysis Sierra Pacific Industries Biomass-Fired Cogeneration Project Anderson, California" Letter to Gerardo Rios. 23 Jan. 2012

biomass-fired fluidized-bed boilers [are] in operation. However, most, if not all, produce steam solely for power generation, and do not provide process steam. Steam used to heat industrial processes is often subject to varying demand, especially for batch processes (e.g., lumber dry kilns). The primary reason for fluidized bed boiler designs lack of representation among biomass-fired process steam generators is the inability to operate in a turndown mode." The process steam flexibility that SPI desires for its sawmill operations cannot reliably or effectively be accommodated by a fluidized bed boiler. Therefore, a fluidized bed boiler is technically infeasible for this project.

EMxTM

To date, EMxTM has been designed and used only on small to medium sized natural gas-fired stationary turbines for demonstration purposes. We are not aware of any biomass boiler applications currently operating with EMx, or any permit application for a biomass boiler that proposes to use the EMx to control NO_x emissions.

The EMxTM system is sensitive to sulfur in the exhaust, which can degrade the performance of the system. While wood fuels are not generally considered high-sulfur fuels, the AP-42 SO_2 emission factor for wood-fired boilers is 0.025 lb/MMBtu, which is equivalent to about 7.2 lb/hr of SO_2. Natural gas, the combustion fuel most commonly associated with EMxTM applications, has maximum sulfur limit of one grain per 100 standard cubic feet (gr/scf) of gas in California, where EMxTM has been applied. On a heat input basis, this is equivalent to an SO_2 emission rate of 0.43 lb/hr.

The lack EMx implementation for biomass boilers, combined with the sensitivity to sulfur suggest that EMxTM is technologically infeasible as a control technology for controlling NO_x emissions from a biomass-fired boiler. Therefore we do not consider this technology achievable for biomass-fired boilers at this time.

DLN Burner

With two or more DLN burners, the biomass combustion fuel would need to be pulverized and burned in suspension using wall-mounted burners. This presents a significant departure from SPI's proposed boiler design where combustion occurs on a moving grate. DLN burners are designed to limit the amount of fuel-bound nitrogen that is converted to NO_x during combustion, and are generally suited to boilers that burn wood waste containing a high percentage of resins, such as the waste from medium density fiberboard, plywood, or veneer operations. The emission rate with DLN burners is projected to be 0.35 lb/MMBtu.

Good combustion practices

A modern biomass-fired boiler furnace, operated with computerized controls to ensure good combustion practices would result in a NO_x emission limit between 0.20 lb/MMBtu and 0.26 lb/MMBtu. The boiler design proposed by SPI would emit 0.20 lb/MMBtu when utilizing only good combustion practices to reduce NO_x emissions. Good combustion practices are the result of proper boiler maintenance and design.

All of the listed add-on technologies described below are technically feasible for the proposed project.

SNCR (Selective Non-Catalytic Reduction)

With SNCR, ammonia is injected through ammonia-injection nozzles which are positioned in the furnace and used at relatively high temperatures to promote the reaction of NO_x with ammonia. SNCR systems are often incorporated into the overall boiler design, and can be located at the furnace exit because they do not rely on a catalyst. Catalysts may be problematic for biomass stokers because catalyst beds are susceptible to plugging from PM in the flue gases. SNCR is a commonly-employed add-on NO_x control technology for biomass-fired boilers. Over a long term basis the emission rate from a design utilizing an SNCR system is projected to be 0.13 lb/MMBtu of NO_x.

SCR (Selective Catalytic Reduction), RSCR (Regenerative Selective Catalytic Reduction) and other catalyst variants

An SCR system is similar to SNCR in that a reagent reacts with NO_x to form nitrogen and water; however a catalyst matrix is used to allow the reduction reaction to take place at lower temperatures. There are several SCR and SCR variant systems that have been permitted for use on biomass boilers in various configurations along the exhaust stream. Although many biomass boilers have begun to be permitted with SCR and SCR variant systems, the verifiable data and the demonstrated effectiveness of SCR systems at constructed biomass facilities remains limited. Moreover, the projected NO_x emissions from those facilities permitted with SCR vary considerably.

The RBLC contains references to permitted RSCR and SCR systems with emission limits as low as 0.03 lb/MMBtu of NO_x on a 12-month rolling basis as seen in Table 7.1-1. The lowest referenced NO_x emissions limit that EPA has discovered in its review from constructed biomass power plants is McNeil Generating Station with a verified 2010 quarterly calendar emission rate of 0.75 lb/MMBtu of NO_x. However, the short term emission limit for the main boiler at McNeil while burning wood shall not exceed 0.23 lb/MMBtu. The installation of that SCR system was permitted through a permit amendment. The facility "proposed to install and operate a selective catalytic reduction (SCR) system in order to reduce the facility's emissions of NO_x. The reduced NO_x emissions are required for the Facility to qualify for Class 1 renewable energy credits (RECs) in New England."[6] Aspen Power's Lufkin Generating Station in Texas has constructed, however, EPA has not been able to verify if this NO_x emissions limit has been demonstrated in practice over the shorter averaging period.

Step 3 – Rank Control Technologies

A summary of recent NO_x BACT determinations for biomass-fired boilers is provided in Table 7.1-1. The applicant has proposed a NO_x limit of 0.13 lb/MMBtu, based on a 12-month rolling average and 0.15 lb/MMBtu, based on a 3-hour block average.

6 McNeil Generating Station Title V Permit

Table 7.1-1: Summary of Recent NO_x BACT Determinations for Similar Units

Facility Name	State	Permit #	Permit Date	Control Method	Limit		Average	Status
Beaver Wood Energy Fair Haven	VT	AP-11-015	10-Feb-12	SCR	0.03	lb/MMBtu	12 month rolling	Not Constructed
Berlin Biopower	NH	TP-0054	26-Jul-10	SCR	0.06	lb/MMBtu	30 day rolling	Project Canceled
Montville Power	CT	107-0056	6-Apr-10	RSCR	0.06	lb/MMBtu	24 hour block	Not Constructed
Clean Power Berlin	NH	TP-0033	25-Sep-09	SCR	0.065	lb/MMBtu	30 day rolling	Not Constructed
Concord Steam	NH	TP-0014	12-Aug-11	SCR	0.065	lb/MMBtu	30 day rolling	Not Constructed
McNeil Generating Station*	VT	AOP-07-02a	2-Feb-09	RSCR	0.075	lb/MMBtu	Quarterly	Verified
Lufkin Generating Plant	TX	81706	26-Oct-09	SCR	0.075	lb/MMBtu	30-day rolling	Constructed
Warren County Biomass	GA	4911-301-0016-P-01-0	17-Dec-10	SNCR	0.1	lb/MMBtu	30 day rolling	Not Constructed
Darrington Energy Cogeneration	WA	PSD 03-04	11-Feb-05	SNCR	0.12	lb/MMBtu	24 hour block	Not Constructed
SPI-Anderson	**CA**	**SAC 12-01**	**Proposed**	**SNCR**	**0.13**	**lb/MMBtu**	**12 month rolling**	
SPI- Skagit County Lumber Mill	WA	PSD 05-04	11-Jun-09	SNCR	0.13	lb/MMBtu	24 hr block	
Clewiston Sugar Mill	FL	PSD-FL-333	18-Nov-03	SNCR	0.14	lb/MMBtu	30 day rolling	
SPI-Anderson	**CA**	**SAC 12-01**	**Proposed**	**SNCR**	**0.15**	**lb/MMBtu**	**3 hour block**	
SPI Aberdeen	WA	PSD-02-02	17-Oct-02	SNCR	0.15	lb/MMBtu	24 hour block	
Lindale Renewable Energy	TX	PSDTX1184	8-Jan-10	SNCR	0.15	lb/MMBtu	30 day rolling	
Fibrominn Biomass Power	MN	15100038-001	23-Oct-02	SNCR	0.16	lb/MMBtu	30 day rolling	
Koda Energy	MN	13900114	23-Aug-07	SNCR	0.25	lb/MMBtu	Not specified	

* McNeil Station is not the result of a BACT Determination as discussed in NO_x Step 4 below.

The remaining technologically feasible control technologies ranked in decreasing order of effectiveness are:

Table 7.1-2: Ranking of NO_x control technologies

NO_x control technology	Emission Rate (lb NO_x /MMBtu)
SCR, RSCR and variants	0.06
SNCR	0.13
Good combustion practices	0.20
DLN burner	0.35

Step 4 – Economic, Energy and Environmental Impacts

SPI has submitted cost-effectiveness estimates comparing SCR and SNCR with their projected NO_x emission rates and the cost of installation and operation of the respective control technologies. SPI assumed that the new boiler's emission rate with the use of SCR for the cost-effectiveness estimates would be lower than any emissions level that EPA has found to be demonstrated in practice. SPI presumes that the rate of NO_x emissions with SCR and SNCR are 0.06 lb/MMBtu and 0.13 lb/MMBtu respectively.

The average cost per ton controlled from SCR and SNCR technologies at the proposed emission levels are $4,596 and $1,417 respectively. However, the incremental cost-effectiveness separating the two technologies reveals that the cost of each additional ton of NO_x removed by the implementation of SCR at the projected cost and emission rate is $9,191. EPA reviewed the cost estimates provided in the PSD permit modification application and determined that it considered the appropriate operation and capital costs but calculated improper potential to emit emissions estimates. The additional expense of the SCR equipment is due to a higher capital cost in primary equipment along with higher operational, maintenance and lost revenue costs.

Although the McNeil Generating Station has demonstrated a lower NO_x emission limit on a calendar quarterly basis, it has a short term NO_x emission limit of 0.23 lb/MMBtu. Moreover, the possible economic incentives of the Class 1 Renewable Energy Credits in New England are difficult to quantify and not available to SPI- Anderson. This may allow SCR system to be more economically feasible for McNeil Generating Station and other proposed systems in the New England area than for SPI- Anderson in California.

EPA does not anticipate additional significant environmental or energy impacts from employing the SNCR or SCR technology. Both systems use ammonia as a reagent: anhydrous ammonia, aqueous ammonia, or urea mixed with water (which hydrolyzes in the hot exhaust to form ammonia). In the case of aqueous ammonia or urea mixed with water, additional fuel must be combusted to evaporate the water associated with the reagent. Moreover, energy is required to operate the injectors used by either technology to introduce the reagent into the exhaust. With either technology, the exhaust leaving the boiler stack will contain some small quantity of ammonia.

Step 5 – Select BACT
SPI has proposed the most stringent NO_x emissions limit for stoker boilers with SNCR demonstrated in practice. Although additional tons of possible NOx emissions may be controlled by the installation of an SCR system, the increased annual costs of an SCR system or other variants versus the SNCR system is cost prohibitive at this existing sawmill facility.

Based on a review of the available control technologies for NO_x emissions from biomass boilers selected for this operation, we have concluded that BACT for the stoker boiler to perform this purpose is 0.15 lb/MMBtu (3-hour block average) and 0.13 lb/MMBtu (12-month rolling average) employing SNCR. We are also requiring a lb/hr mass emission rate of 60.8 lb/hr (3-hour block average) during normal operations.

7.1.2. Carbon Monoxide

Carbon monoxide (CO) occurs due to incomplete combustion of fuel in the boiler's combustion chamber, and in the Low-NO_x burners when they are operated.

Step 1 - Identify All Control Technologies
A number of existing boiler design alternatives support the combustion of biomass at this megawatt capacity. Therefore, in identifying all possible control technologies, the BACT analysis should begin with a discussion of boiler design alternatives.

In addition to the boiler design, the available inherent CO control technology includes:
- Good combustion practices

In addition to the inherent available control technology, the add-on CO control technologies include:
- EMxTM
- Catalytic oxidation

Step 2 – Eliminate Technically Infeasible Options

Boiler Design Alternatives

As discussed in the BACT analysis for NO_x in Section 7.1.1 of this document, fluidized bed boiler designs were found to be infeasible for this project.

EMxTM

As discussed in the BACT analysis for NO_x in Section 7.1.1 of this document, EMx has been designed and used only on small to medium sized natural gas-fired stationary turbines for demonstration purposes. EMx has not been demonstrated in practice for biomass boilers and we do not consider this technology achievable for biomass boilers at this time.

Good combustion practices

A modern biomass-fired boiler furnace, operated with computerized controls to ensure good combustion practices would result in a CO emission limit of between 0.23 and 0.35 lb/MMBtu. The boiler design proposed by SPI would emit 0.23 lb/MMBtu of CO when utilizing only good combustion practices to reduce CO emissions. Good combustion practices are a technically feasible technology for controlling CO emissions from biomass-fired boilers.

The add-on technology described below is technically feasible for this project.

Catalytic Oxidation

Catalytic oxidation can be used to control CO when a matrix coated with noble metals facilitates the conversion of a pollutant, such as CO to CO_2. Catalytic oxidizers operate in a temperature range of approximately 650°F to 1,000°F. At lower temperature the CO conversion efficiency falls off rapidly. Although technically feasible, catalytic oxidation has not been reliably demonstrated for biomass boilers. SPI projects that with successful implementation of a catalytic oxidizer the facility may be able to emit 0.1 lb/MMBtu of CO. Other permitted facilities that have not constructed have been permitted at CO emission levels as low as 0.075 lb/MMBtu of CO.

Step 3 – Rank Control Technologies

A summary of recent BACT determinations for biomass-fired stoker boilers with CO emission limits is provided below. The applicant has proposed a CO limit of 0.23 lb/MMBtu (3 hour block average). SPI has proposed the most stringent emission limit of constructed biomass stoker boilers that EPA was able to find in its control technology review.

Table 7.1-3: Summary of Recent CO BACT Determinations for Similar Units

Facility Name	State	Permit #	Permit Date	Control Method	Limit	Averaging time	Status
Beaver Wood Energy	VT	AP-11-015	10-Feb-12	Oxidation Catalyst	0.075 lb/MMBtu	24 hour rolling	Not Constructed
Berlin Biopower	NH	TP-0054	26-Jul-10	Good combustion	0.075 lb/MMBtu	24 hour block	Project Canceled
Warren County Biomass	GA	4911-301-0016	17-Dec-10	Good combustion	0.08 lb/MMBtu	30 day rolling	Not Constructed
South Point	OH	07-00534	4-Apr-06	Oxidation Catalyst	0.1 lb/MMBtu	No information	Not Constructed
Montville Power LLC	CT	107-0056	6-Apr-10	Oxidation Catalyst	0.1 lb/MMBtu	8 hour block	Not Constructed
International Biofuels	VA	52125	13-Dec-05	Good combustion	0.19 lb/MMBtu	No information	Not Constructed
SPI-Anderson	**CA**	**SAC 12-01**	**Proposed**	**Good combustion**	**0.23 lb/MMBtu**	**3 hour block**	
Fibrominn Biomass	MN	15100038-001	23-Oct-02	Good combustion	0.24 lb/MMBtu	24 hour	
Lindale Renewable Energy	TX	PSDTX1184	8-Jan-10	Good combustion	0.31 lb/MMBtu	30 day rolling	
Lufkin Generating	TX	81706	26-Oct-09	Good combustion	0.31 lb/MMBtu	30 day rolling	
SPI-Aberdeen	WA	PSD-02-02	17-Oct-02	Good combustion	0.35 lb/MMBtu	hourly average	
Beaver Wood Energy Fair Haven	VT	AP-11-015	10-Feb-12	Good combustion	0.35 lb/MMBtu	hourly average	
Darrington Energy	WA	PSD 03-04	11-Feb-05	Good combustion	0.35 lb/MMBtu	24-HR	
Simpson Tacoma Kraft Company	WA	PSD-06-02	22-May-07	Good combustion	0.35 lb/MMBtu	30 day rolling	
Clewiston Sugar Mill And Refinery	FL	PSD-FL-333	18-Nov-03	Good combustion	0.38 lb/MMBtu	12 month rolling	
Koda Energy	MN	13900114	23-Aug-07	Good combustion	0.43 lb/MMBtu	30 day rolling	

However, the new biomass boiler SPI- Anderson has not begun construction at this time. Based on this information, oxidation catalyst is being evaluated as the most stringent control. The remaining feasible control technologies ranked in decreasing order of effectiveness are:

Table 7.1-4: Ranking of CO control technologies

CO control technology	Emission Rate (lb CO /MMBtu)
Catalytic Oxidation	0.10
Good combustion practices	0.23

Step 4 – Economic, Energy and Environmental Impacts

SPI has submitted cost-effectiveness estimates comparing catalytic oxidation and good combustion practices with their projected CO emission rates and the cost of installation and operation of the respective control technologies. SPI assumed that the new boiler's emission rate with the use of an oxidation catalyst for the cost-effectiveness estimates would be lower than any emissions level that EPA has found to be demonstrated in practice. SPI has presumed that the rate of CO emissions with catalytic oxidation and good combustion practices are 0.1 lb/MMBtu and 0.23 lb/MMBtu respectively.

As good combustion practices are the result of proper boiler maintenance and the boiler design, SPI only assessed the incremental cost-effectiveness separating the two technologies. The cost of each additional ton of CO removed by the implementation of catalytic oxidation at the projected cost and emission rate is $8,930. EPA reviewed the cost estimates provided in the PSD permit modification application and determined that it considered the appropriate costs but calculated improper potential to emit emissions estimates. The additional expense of the catalytic oxidizer is due to a higher capital cost in primary equipment along with higher operational, maintenance and lost revenue costs.

Step 5 – Select BACT

SPI has proposed the most stringent CO emissions limit for stoker boilers demonstrated in practice. Although additional tons of possible CO emissions may be controlled by the

installation of an oxidation catalyst, SPI has expressed significant doubts that the catalyst will be able to reliably and effectively control CO given its fuel type and operation. In addition, the increased annual costs of an oxidation catalyst present a significant financial burden at this existing sawmill facility.

Based on a review of the available control technologies for CO emissions from biomass boilers selected for this purpose, we have concluded that BACT for the stoker boiler to perform this operation is 0.23 lb/MMBtu (3-hour block average) employing good combustion practices. We are also requiring a lb/hr mass emission rate of 108 lb/hr (3-hour block average) during normal operations.

7.1.3. Particulate Matter- PM, PM_{10}, $PM_{2.5}$

Particulate emissions are the result of unburned solid carbon (soot), unburned vapors or gases that subsequently condense, and unburned portions of fuel (ash). Because the applicant has assumed that all particulate emissions from the boiler are $PM_{2.5}$, the BACT analyses for PM, PM_{10} and $PM_{2.5}$ have been combined. Additionally, the analysis evaluates total particulate emissions – condensable and filterable.

Step 1 – Identify All Control Technologies

The following inherent control options for PM, PM_{10} and $PM_{2.5}$ emissions include:

- Low sulfur fuels for normal operation, and/or pipeline natural gas for startup and shutdown
- Good combustion practices

The available add-on PM, PM_{10}, $PM_{2.5}$ control technologies include:

- Cyclones (including multiclones)
- Venturi scrubber
- Electrostatic precipitator (ESP)
- Baghouse/ Fabric filter.

<u>Low sulfur fuels</u>

The wood fuels to be used predominantly during normal operation along with the pipeline natural gas to be used during startup and shutdown are not generally considered high-sulfur fuels.

<u>Good combustion practices</u>

A modern biomass-fired boiler furnace, operated with computerized controls to ensure good combustion practices, would result in a PM, PM_{10} and $PM_{2.5}$ emission limit between 0.33 lb/MMBtu and 0.56 lb/MMBtu, based on U.S. EPA's AP-42 Compilation of Air Pollutant Emission Factors for wood residue combustion in boilers.

The add-on technologies described below are technically feasible for this project.

<u>Cyclones or Multiclones</u>

Cyclones or multiclones, a series of single cyclone particulate matter separators, operate in a similar manner. An inlet gas stream enters the cyclone or multiclone at an angle causing the gas stream to spin rapidly. The resulting centrifugal forces push the larger particulate into and down along the cyclone walls for collection.

Venturi Scrubbers

Venturi scrubbers reduce particulate by introducing liquid into a converging section of a gas stream. The particulate in the gas stream is removed when it mixes with the liquid and forms tiny droplets that are collected and removed. With gas-side pressure drops exceeding 15 inches of water, particulate collection efficiencies of 85% or greater have been reported for venturi scrubbers operating on wood-fired boilers.

Electrostatic precipitator (ESP)

Electrostatic precipitators use electrostatic forces to separate particulate from the gas stream. When applied to wood-fired boilers, ESPs are often used downstream of mechanical collector pre-cleaners which remove larger-sized particles. Collection efficiencies of 90-99% for particulate have been observed for ESPs operating on wood-fired boilers.

Baghouse/ Fabric filter

Baghouses or fabric filters have had limited applications to wood-fired boilers. The principal drawback to fabric filtration is a fire danger arising from the collection of combustible carbonaceous fly ash. Although some fabric filters have demonstrated lower collection efficiencies, most fabric filter particle collection efficiencies are 90-99%, equivalent to ESPs.

Step 2 – Eliminate Technically Infeasible Options

All of the available control options identified in Step 1 are technically feasible. Cyclones are often used in conjunction with the other control technologies listed above.

Step 3 – Rank Control Technologies

A summary of recent BACT determinations for biomass-fired stoker boilers with PM, PM_{10}, and $PM_{2.5}$ emission limits is provided below. The applicant has proposed a total PM, including filterable and condensable particulate, emission limit of 0.02 lb/MMBtu (3 hour block average)utilizing an ESP preceded by a multiclone. SPI has proposed the most stringent PM, PM_{10}, and $PM_{2.5}$ emission limit of biomass stoker boilers that have constructed.

Table 7.1-5: Recent PM, PM_{10}, $PM_{2.5}$ BACT Determinations for Similar Units

Facility Name	State	Permit #	Permit Date	Control Method	Limit		Status
Berlin Biopower*	NH	TP-0054	07/26/2010	Baghouse	0.01	lb/MMBtu	Project Canceled
Warren County Biomass	GA	4911-301-0016-P-01-0	12/17/2010	Baghouse	0.018	lb/MMBtu	Not Constructed
Beaver Wood Energy Fair Haven	VT	AP-11-015	02/10/2012	ESP	0.019	lb/MMBtu	Not Constructed
SPI-Anderson	**CA**	**SAC 12-01**	**Proposed**	**ESP**	**0.02**	**lb/MMBtu**	
SPI- Skagit County Lumber Mill	WA	PSD 05-04	01/25/2006	ESP	0.02	lb/MMBtu	
Darrington Energy Cogeneration	WA	PSD 03-04	02/11/2005	DRY ESP	0.02	lb/MMBtu	
Fibrominn Biomass	MN	15100038-001	10/23/2002	Baghouse	0.02	lb/MMBtu	
Simpson Tacoma Kraft Company	WA	PSD-06-02	05/22/2007	ESP	0.02	lb/MMBtu	
Rome Linerboard Mill	GA	2631-115-0021-V-01-4	10/13/2004	ESP	0.025	lb/MMBtu	
Lufkin Generating Plant	TX	81706	26-Oct-09	ESP	0.025	lb/MMBtu	

*Filterable only

SPI has estimated that the use of a multiclone followed by an ESP or baghouse will be equally effective in the control of particulate matter from the proposed boiler. The feasible control technologies ranked in decreasing order of effectiveness are:

Table 7.1-6: Ranking of PM/ PM_{10}/ $PM_{2.5}$ control technologies

PM/ PM_{10}/ $PM_{2.5}$ control technology	Emission Rate (lb PM/ PM_{10}/ $PM_{2.5}$ per MMBtu)
ESP with multiclone	0.02
Baghouse with multiclone	0.02
Venturi Scrubber	0.30
Low sulfur fuels	0.33
Good Combustion practices	0.33-0.56

Step 4 – Economic, Energy and Environmental Impacts

In EPA's review, three biomass stoker facilities have proposed lower rates of total particulate emissions than SPI- Anderson. The 0.01 lb/MMBTu particulate emissions limit for Laidlaw Berlin Biopower was only for filterable particulate, not total particulate, and the project has been canceled. The succeeding total particulate emission levels in Table 7.1-5 for 0.18 lb/MMBtu and 0.19 lb/MMBtu of total particulate have been proposed but have not been demonstrated in practice. Moreover, the increased levels of control for total particulate in both of cases were proposed with different control technologies.

In our review, EPA found that the lowest achievable total particulate emissions demonstrated in practice from biomass stoker boilers have been achieved with fabric filters or ESPs. With equivalent levels of control, SPI considered the potential economic, energy and environmental impacts from each control system. Baghouses require additional energy to overcome increased pressure drops that occur during the control of particulate. ESP systems use electricity to create an electric field, but typically have lower overall energy requirements than baghouses. As stated earlier, fabric filters may also have an increased fire danger at biomass facilities due to the carbonaceous fly ash.

Step 5 – Select BACT

Based on a review of the available control technologies for PM, PM_{10} and $PM_{2.5}$ emissions from biomass boilers selected for this purpose, we have concluded that BACT

for the stoker boiler to perform this operation is 0.02 lb/MMBtu (3-hour block average) using a multiclone and ESP. We are also requiring a lb/hr mass emission rate of 9.4 lb/hr (3-hour block average) during normal operations.

7.1.3. Startup and Shutdown BACT Limits

The boiler startup process begins by igniting a pile of biomass fuel on the grate and firing two 62.5 MMBtu/hr natural gas burners located near the steam tubes. After approximately 12 hours, the boiler will be at about 50 % of full load and attain a sufficient steady state temperature supporting the activation of the SNCR system. Once the boiler has reached normal operating temperature, as specified by the boiler manufacturer, startup has concluded and the boiler will operate under normal conditions. Shutdown begins when the fuel feed is curtailed and the unit begins cooling. Shutdown ends when the recorded temperature at the superheater outlet reaches 150°F and remains so for at least one hour, or 24 hours has elapsed since the shutdown process began. Add-on particulate controls will be operating during all phases of startup and shutdown. The SNCR will be operating at all appropriate temperature ranges, as specificed by the SNCR manufacturer. During startup and shutdown, the generator shall be disconnected from the electrical grid.

Table 7.1-7 lists the startup and shutdown BACT emission and averaging times. Table 7.1-7 also lists the maximum amount of time for a startup and shutdown event.

Table 7.1-7: BACT for Startup and Shutdown

Pollution and Duration Limits	
NO_x (hourly average)	70.2 lb/hr
CO (hourly average)	108 lb/hr
PM, PM_{10}, $PM_{2.5}$ (24 hour average)	8.93 lb/hr
SO_2 (hourly average)	2.34 lb/hr
Maximum Duration	24 hours

7.2 BACT for Emergency Engine

The project includes a 256hp (190kW) natural gas-fired emergency engine to run the emergency boiler recirculation pump. The limited operation of this unit results in minimal annual emission rates. This equipment is subject to BACT for NO_x, CO, PM, PM_{10}, $PM_{2.5}$. A top-down BACT analysis has been performed and is summarized below.

7.2.1 NO_x, CO, PM, PM_{10}, $PM_{2.5}$ Emissions

Step 1 -- Identify all control technologies

The control options for NO_x emissions from engines include SCR, NO_x reducing catalyst, NO_x adsorber, catalyzed diesel particulate filter, catalytic converter, and oxidation catalyst. A catalytic converter and oxidation catalyst are also control options for CO

emissions. A particulate filter/trap can be added for the control of PM, PM_{10}, and $PM_{2.5}$ emissions,

Unlike the main biomass boiler, the emergency engine will be limited in operation and is required to be certified in compliance with NSPS requirements, including emission limits, upon purchase. A review of other BACT determinations was not performed because it is very unlikely that a more detailed review would change the final determination due to the limited use and annual emission rates associated with the proposed limits. The potential to emit for all criteria pollutants subject to BACT review is less than 200 lbs/yr.

Different types of engines have different emission requirements based on the type of engine being purchased. Engine manufacturers may need to employ some of the control technologies identified above in order to comply with the NSPS emission limits, depending on the type of engine and the applicable limits. The applicant is proposing to install an emergency engine for infrequent recirculation pump needs. As a result, SPI must purchase engines that comply with the NSPS and meet the emission requirements for emergency engines. However, we note that the applicant could purchase engines that meet the NSPS standards for non-emergency engines, which have more stringent limits, and operate them as emergency engines. As a result, this review identifies the control technologies to be:

- NSPS-compliant emergency engine
- Engine that meets NSPS for non-emergency engines
- Limiting use (limits on the hours of operation)

Step 2 – Eliminate technically infeasible control options
All of the control technologies identified are assumed to be technically feasible.

Step 3 – Rank remaining control technologies
The available control technologies are ranked according to control effectiveness in Table 7.2-1.

Table 7.2-1: NSPS Limits for Engines

Engine Type (190kW)	NO_x +NMHC (g/kW-hr)	CO (g/kW-hr)	PM (g/kW-hr)
Non-emergency engine	0.59	3.5	0.02
Emergency engine	4.0	3.5	0.20

Step 4 – Economic, Energy and Environmental Impacts
Due to economic impacts and limited environmental benefit, the use of add-on controls for the emergency engine and purchasing an engine that meet NSPS standards for a non-emergency engine and operating it as an emergency engine would be impractical in this case. This is illustrated in Table 7.2-2 by the potential emissions from the emergency engine (based on 100 hours of operation per year and complying with the NSPS for emergency engines). Requiring the additional reductions in emissions that would be

gained by use of engines that meet NSPS standards for non-emergency engines would have very little environmental benefit and not justify the cost.

Table 7.2-2: Summary of PTE for 190 kW Emergency Engine

Pollutant	Emergency Engine (tpy)
NO_x	0.039
CO	0.306
PM, PM_{10}, $PM_{2.5}$	0.0011

Step 5 – Select BACT

Based on a review of the available control technologies, we have concluded that BACT is limiting the hours of operation and the emission limits listed in Table 7.2-3 based on a 3-hour average. It is assumed that newly purchased engines would be the most energy efficient available and that operating in compliance with NSPS requirements will ensure that each engine is properly maintained and as efficient as possible.

Table 7.2-3: Summary of BACT for 190 kW Emergency Engine

Engine Type	NO_x +NMHC (g/kW-hr)	CO (g/kW-hr)	PM (g/kW-hr)
Emergency engine	4.0	3.5	0.20

7.3. BACT for Cooling Towers

The proposed project also requires a cooling tower system to dissipate the heat load into the atmosphere. The cooling tower system is subject to BACT for PM, PM_{10}, and $PM_{2.5}$. A top-down BACT analysis has been performed and is summarized below. The applicant conservatively assumed PM, PM_{10} and $PM_{2.5}$ emissions from the cooling tower were equivalent.

Step 1 - Identify All Control Technologies

The following inherent control options for PM, PM_{10}, and $PM_{2.5}$ emissions include:

- Wet cooling
- Dry cooling
- Wet-Dry Hybrid cooling

<u>Wet cooling</u>

Cooling towers are heat exchangers that are used to dissipate large heat loads to the atmosphere. They are used as an important component in many industrial and commercial processes needing to dissipate heat. Wet cooling towers rely on the latent heat of water evaporation to exchange heat between the process and the air passing through the cooling tower.

A two-cell evaporative cooling tower for this project would require a water load 4.24 gallons per minute per square foot. The expected air velocity is 503 feet per minute. Fugitive particulate emissions would be generated from the cooling tower due to the total dissolved solids (TDS) in the water.

Dry cooling
Dry cooling uses an air cooled condenser (ACC) that cools the steam turbine generators' exhaust steam using a large array of fans that force air over finned tube heat exchangers. The exhaust from the steam turbine flows through a large diameter duct to the ACC where it is condensed inside the tubes through indirect contact with the ambient air. The heat is then released directly to the atmosphere.

Wet-Dry Hybrid cooling
Wet-Dry Hybrid cooling uses wet and dry cooling technologies in parallel, and uses all of the equipment involved in both wet and dry cooling. Hybrid cooling technology divides the cooling function between the wet and dry systems depending on the capabilities of each system under different environmental and operational conditions.

The available add-on PM, PM_{10}, and $PM_{2.5}$ control technologies include:
• Drift eliminators

Drift Eliminators
Drift eliminators are usually incorporated into the tower design to remove as many droplets as practical from the air stream before exiting the tower. The drift eliminators used in cooling towers rely on inertial separation caused by direction changes while passing through the eliminators. Types of drift eliminators include many different configurations and various materials. The materials may include other features, such as corrugations and water removal channels, to enhance the drift removal further.

Step 2 – Eliminate Technically Infeasible Options
All of the available control options identified in Step 1 are technically feasible.

Step 3 – Rank Control Technologies
The remaining feasible control technologies ranked in decreasing order of effectiveness are:

Table 7.3-1: Ranking of PM/ PM_{10}/ $PM_{2.5}$ control technologies

PM/ PM_{10}/ $PM_{2.5}$ control technology	Emission Rate (tpy of PM, PM_{10}, $PM_{2.5}$)
Dry cooling	0
Wet-Dry Hybrid cooling	0.55[7]
Wet cooling with 0.0005% Drift Eliminators	1.10

The applicant has proposed to use wet cooling with DRU-1.5 high-efficiency mist eliminators with a drift loss of less than 0.0005%. This is the equal to the lowest proposed amount of drift that EPA has found in its review of similar facilities.

[7] The applicant did not estimate potential emissions from a wet-dry hybrid system. We have approximated emissions from such a system to be one-half of those from a wet cooling system.

EPA did not find any sawmill facilities or biomass boilers that use dry cooling or wet-dry hybrid cooling as an alternative to wet cooling. As shown in Table 7.3-1 the potential impact from the various control options will have a limited effect on the total PM emissions from the project. The difference in potential to emit resulting from the cooling tower options is 1.10 tpy of total PM.

Step 4 – Economic, Energy and Environmental Impacts
The use of a dry or hybrid wet-dry system would reduce the overall efficiency of the facility, due to the additional energy requirements for the wet and hybrid systems. Moreover, dry and wet-dry cooling systems are typically more costly than a more conventional wet cooling tower system. On the other hand, the use of wet cooling has a potential environmental impact associated with additional consumption of water resources.

Step 5 – Select BACT
Based on a review of the available control technologies for PM, PM_{10}, $PM_{2.5}$emissions from cooling towers selected for this operation, and the limited amount of total particulate resulting from the cooling tower operation, we have concluded that the proposed boiler can utilize wet cooling.

Utilizing the wet cooling tower option, SPI has elected to use the most stringent control option available, by limiting drift to 0.0005%. Therefore, BACT for the cooling tower in the proposed modification will be the use of a wet cooling tower with a drift loss of less than 0.0005%.

8. Air Quality Impacts

CAA Section 165 and EPA's PSD regulations at 40 CFR § 52.21 require an examination of the impacts of the proposed SPI- Anderson project on ambient air quality. The applicant must demonstrate, using air quality models, that the facility's emissions of PSD-regulated air pollutants would not cause or contribute to a violation of (1) the applicable NAAQS, or (2) the applicable PSD increments (explained below in Sections 8.4 and 8.5). These sections of the AAQIR include a discussion of the relevant background data and air quality modeling, and EPA's conclusion that the project will not cause or contribute to an exceedance of the applicable NAAQS or applicable PSD increments and is otherwise consistent with PSD requirements governing air quality.

8.1 *Introduction*

8.1.1 Overview of PSD Air Impact Requirements

Under the PSD regulations, permit applications for major sources must include an air quality analysis demonstrating that the facility's emissions of the PSD-regulated air pollutants will not cause or contribute to a violation of the applicable NAAQS or applicable PSD increments. (A PSD increment for a pollutant applies only to areas that meet the corresponding NAAQS.) The applicant provides separate modeling analyses for

each criteria pollutant emitted above the applicable significant emission rate. If a preliminary analysis shows that the ambient concentration impact of the project by itself is greater than the Significant Impact Level (SIL), then a full or cumulative impact analysis is required for that pollutant. The cumulative impact analysis includes nearby pollution sources in the modeling, and adds a monitored background concentration to account for sources not explicitly included in the model. The cumulative impact analysis must demonstrate that the modification will not cause or contribute to a NAAQS or increment violation. If a preliminary analysis shows that the ambient concentration impact of the project by itself is less than the SIL, then further analysis is generally not required. Required model inputs characterize the various emitting units, meteorology, and the land surface, and define a set of receptors (spatial locations at which to estimate concentrations, typically out to 50 km from the facility). Modeling should be performed in accordance with 40 CFR § 51, Appendix W- *Guideline on Air Quality Models* (GAQM). AERMOD with its default settings is the standard model choice, with CALPUFF available for complex wind situations.

A PSD permit application typically includes a Good Engineering Practice (GEP) stack height analysis, to ensure that downwash is properly considered in the modeling, and stack heights used as inputs to the modeling are no greater than GEP height, so as to disallow artificial dispersion from the use of overly tall stacks. The application may also include initial "load screening," in which a variety of source operating loads and ambient temperatures are modeled, to determine the worst-case scenario for use in the rest of the modeling.

The PSD regulations also require an analysis of the impact on nearby Class I areas, generally those within 100 km, though the relevant Federal Land Manager (FLM) may specify additional or fewer areas. This analysis includes the NAAQS, PSD increments, and Air Quality Related Values (AQRVs). AQRVs are defined by the FLM, and typically limit visibility degradation and the deposition of sulfur and nitrogen. Generally, CALPUFF is the standard model choice for Class I analyses because it can handle visibility chemistry as well as the typically large distances (over 50 km) to Class I areas.

Finally, the PSD regulations require an additional impact analysis, showing the project's effect on visibility, soils, vegetation, and growth. This visibility analysis is independent of the Class I visibility AQRV analysis. The additional impact analysis for the SPI-Anderson project is discussed in Section 9.

8.1.2 Identification of SPI- Anderson Modeling Documentation

The applicant, SPI, submitted numerous documents and materials which comprise the entire modeling analysis. *PSD and ATC permit Application* (May 2007) contains the results of the original modeling and most of the Class I analyses. The updated *PSD and ATC Application* and associated compact disc (March 2010) contain updated modeling results. *Response to Incompleteness Determination #1* (July 2010), containing a full impact analysis for compliance with the 1-hour NO_2 NAAQS and a partial Additional Impacts Analysis. *Response to Incompleteness Determination #2* (September 2010) revisits the 1-hour NO_2 NAAQS compliance analysis and provides monitoring and

meteorology background information. *Startup/Shutdown Information* (December 2010) contains proposed limits on the number of annual startups and shutdowns. *Response to Additional Information Request* (June 2011) provides further information on proposed startup and shutdown emission limits. *Updated Air Dispersion Modeling Analysis* (May 2012) contains modeling files and an updated modeling analysis that reflects project changes since the March 2010 submittal. *Surface Characteristics* (June 2012) describes the surface characteristics between the meteorology site and the project site as well as modeling receptor network. *Background Concentration Information* (June 2012) supplies information regarding the monitoring background concentrations. *CALPUFF Modeling Files* (June 2012) contains archived CALPUFF modeling files developed for the original May 2007 PSD application and used in subsequent submittals.

8.2. Background Ambient Air Quality

The PSD regulations require the air quality analysis to contain air quality monitoring data as needed to assess ambient air quality in the area for the PSD-regulated pollutants for which there are NAAQS that may be affected by the source. In addition, for demonstrating compliance with the NAAQS, a background concentration is added to represent those sources not explicitly included in the modeling, so that the total accounts for all contributions to current air quality.

The applicant used ambient air concentrations of NO_2, which were recorded at Manzanita Avenue in Chico 55.5 miles (90 km) south of the facility's current location. This was the closest and most representative NO_2 monitor to the site. For $PM_{2.5}$ background concentrations, the applicant used data from a monitor at the Redding Department of Health which is approximately 6.5 miles (10.5 km) northeast from the facility. The applicant took PM_{10} background concentrations from Anderson, which is around 6.5 miles southeast from the facility site.

Table 8.2-1 describes the maximum background concentrations (from 2011) of the PSD-regulated pollutants for which there are NAAQS that may be affected by the project's emissions, and the corresponding NAAQS.

Table 8.2-1: Maximum Background Concentrations and NAAQS

Pollutant, Averaging Time	Background Concentration ($\mu g/m^3$)	NAAQS ($\mu g/m^3$)
NO_2, 1-hour	62.7 (33 ppb)	188 (100 ppb)
NO_2, annual	33.1 (17 ppb)	100 (53 ppb)
PM_{10}, 24-hour	42	150
$PM_{2.5}$, 24-hour	15.3	35
$PM_{2.5}$, annual	5.3	15
CO, 1-hour	2,976 (2.6 ppm)	40,000 (35 ppm)
CO, 8-hour	2,404 (2.1 ppm)	10,000 (9 ppm)
Ozone, 8-hour	71 ppb	75 ppb

Note: The $PM_{2.5}$ 24-hr value is 98th percentile averaged over three years rather than maximum
The NO_2 1-hr value is 98th percentile averaged over three years rather than maximum
The Ozone 8-hour value is the fourth highest 8-hour concentration averaged over three years

8.3 Modeling Methodology for Class II areas

The applicant modeled the impact of SPI- Anderson on the NAAQS and PSD Class II increments using AERMOD in accordance with GAQM. The modeling analyses included the maximum air quality impacts during normal operations and startups and shutdowns, as well as a variety of conditions to determine worst case, short-term air impacts.

8.3.1 Model selection

As discussed in the PSD Application (Updated PSD Application, March 2010, p.11pdf15), the model that the applicant selected for analyzing air quality impacts in Class II areas is AERMOD, along with AERMAP for terrain processing and AERMET for meteorological data processing. This is in accordance with the default recommendations in Section 4.2.2 on Refined Analytical Techniques in GAQM.

8.3.2 Meteorology model inputs

AERMOD requires representative meteorological data in order to accurately simulate air quality impacts. The applicant used surface meteorological data collected for a five consecutive-year period (2004-2008) at the Redding Municipal Airport meteorological station. This station is located approximately 2.8 (4.5 km) miles from the project site. The applicant processed these data using EPA's AERMET data processor. EPA concurs that the chosen 2004-2008 Redding data is the most representative for the SPI- Anderson analysis.

For upper air data, the applicant obtained data from the 2004-2008 Medford, Oregon upper air site located approximately 134 miles (215 km) northwest of the project site as being the most representative site available that had data complete enough to use. No other upper air meteorological monitoring stations are located closer to the project site. (Updated PSD Application,p.13pdf.17). EPA agrees that it is appropriate to use Medford, Oregon upper air data for the SPI- Anderson analysis.

8.3.3 Land characteristics model inputs

Land characteristics are used in the AERMOD modeling system in three ways: 1) via elevation within AERMOD to assess plume interaction with the ground; 2) via a choice of rural versus urban algorithm within AERMOD; and 3) via specific values of AERMET parameters that affect turbulence and dispersion, namely surface roughness length, Bowen ratio, and albedo. The surface roughness length is related to the height of obstacles to the wind flow and is an important factor in determining the magnitude of mechanical turbulence. The Bowen ratio is an indicator of surface moisture. The albedo is the fraction of total incident solar radiation reflected by the surface back to space without absorption.

Terrain elevations for receptors and emission sources were prepared using 1/3rd arc-second National Elevation Dataset data developed by the United States Geological Survey (USGS), and available on the internet from the USGS Seamless Data Server (http://seamless.usgs.gov/index.php). These data have a horizontal spatial resolution of approximately 10 meters. Terrain heights surrounding the facility indicate that some of

the receptors used in the simulations were located in intermediate or complex terrain (above stack or plume height). For determining concentrations in elevated terrain, SPI chose the AERMAP terrain preprocessor receptor-output file option.

SPI determined surface parameters including the surface roughness length, albedo, and Bowen ratio for the area surrounding the Redding Municipal Airport meteorological tower using the AERMET preprocessor, AERSURFACE (Version 08009), and the USGS 1992 National Land Cover (NLCD92) land-use data set. The NLCD92 data set used in the analysis has 30 meter data point spacing and 21 land-use categories. Seasonal surface parameters were determined using AERSURFACE according to EPA's guidance.

EPA requested additional detail characterizing the surface parameters surrounding the SPI-Anderson site for comparison with the airport site. Based on this comparison, the applicant and EPA conclude that the use of Redding meteorological data is adequately representative of the project site.

8.3.4 Model receptors

Receptors in the model are geographic locations at which the model estimates concentrations. The applicant places the receptors such that they have good area coverage and are closely spaced enough so that the maximum model concentrations can be found. At larger distances, spacing between receptors may be greater than it is close to the source, since concentrations vary less with increasing distance. The spatial extent of the receptors is limited by the applicable range of the model (roughly 50 km for AERMOD), and possibly by knowledge of the distance at which impacts fall to negligible levels. Receptors need be placed only in ambient air, that is, locations to which the public has access, and that are not inside the project fence line.

The applicant used Cartesian coordinate receptor grids to provide adequate spatial coverage surrounding the project area and to identify the extent of significant impacts and the maximum impact location. For all analyses except 1-hour average NO_2, receptors were spaced 500 m apart covering the 10 km square simulation domain, with 200 m, 50 m, and 25 m spacing receptors grids covering 5 km, 2.5 km, and 1.25 km nested square areas centered on the facility, respectively. Receptors were also located at 25 m intervals along the facility property boundary. For the 1-hour average NO_2 analysis, the modeling domain was extended to 20 km, and the additional area was covered by receptors placed 500 m apart. (Surface Characteristics, p.1pdf1)

8.3.5 Stack parameter model inputs

The modeling conducted by the applicant used the corresponding stack parameters in Table 8.3-1 for normal operations and during startup and shutdown to provide conservative estimates of SPI- Anderson impacts.

Table 8.3-1: Load Screening and Stack Parameters for Cogeneration Unit

Operating Mode	Stack Height (ft)	Stack Diameter (ft)	Stack Velocity (ft/sec)	Stack Temperature (°F)
SU/SD	85	8.5	36.7	294
Normal	85	8.5	61.1	350

Operating Mode	NO_x (lb/hr)	PM_{10}/ $PM_{2.5}$ (lb/hr)	CO (lb/hr)
SU/SD	70.2	8.93	432
Normal	70.2	8.93	108

Source for both parts of table 8-3: Updated Air Dispersion Modeling Analysis (May 2012), p.3, Tables 1,2 and 5pdf.3, 7 and 10.

8.3.6 Good Engineering Practice (GEP) Analysis

The applicant performed a Good Engineering practice (GEP) stack height analysis to ensure that downwash is properly considered and that stack heights used as inputs to the modeling are no greater than GEP height. This disallows artificial dispersion from the use of overly tall stacks. As is typical, the GEP analysis was performed with EPA's *Building Profile Input Program* software, which uses building dimensions and stack heights as inputs. Based on the analysis, the applicant shows that the GEP stack height for the boiler stack would have to exceed the maximum creditable GEP height of 65 m in order to ensure protection against downwash. The applicant showed that the GEP stack height for the other equipment was similarly greater than the planned heights. So, for all emitting units, the applicant used the planned actual stack heights for inputs in AERMOD modeling, and included wind direction-specific Equivalent Building Dimensions to properly account for downwash. (PSD Application p.14pdf.18)

8.4 *National Ambient Air Quality Standards (NAAQS) and PSD Class II Increment Consumption Analysis*

8.4.1 Pollutants with significant emissions

40 CFR § 52.21 requires an air quality impact analysis for each PSD-regulated pollutant (for which there is a NAAQS) that a major source has the PTE in a significant amount, *i.e.*, an amount greater than the Significant Emission Rate (SER) for the pollutant. Applicable SPI- Anderson emissions and the SERs are shown in Table 8.4-1. As shown in Table 8.4-1, EPA does not expect SPI- Anderson to emit Pb, VOC and SO_2 in significant amounts. However, based on the estimates submitted by the applicant, EPA expects SPI- Anderson to emit CO, NO_x, PM_{10}, and $PM_{2.5}$ in significant amounts. Therefore, this project triggers the air impact analyses requirements for CO, NO_2, PM_{10} and $PM_{2.5}$.

Table 8.4-1: PSD Applicability to SPI- Anderson: SER

Pollutant	Emissions (tpy)	SER (tpy)	Does PSD Apply?
CO	472	100	Yes
NO_x	267	40	Yes
PM_{10}	42.1	15	Yes
$PM_{2.5}$	42.1	10	Yes
SO_2	10.3	40	No
Pb	0.03	0.6	No
VOC	34.8	40	No

8.4.2 Preliminary analysis: Project-only impacts (Normal Operations and Startup)

EPA has established Significant Impact Levels (SILs) to characterize air quality impacts. A SIL is the ambient concentration resulting from the facility's emissions, for a given pollutant and averaging period, below which the source is considered to have an insignificant impact. For maximum modeled concentrations below the SIL, further air quality analysis for the pollutant is generally not necessary. In some cases it may be appropriate to consider additional information in order to conclude that a source will not be responsible for creating a new NAAQS exceedance, however. For maximum concentrations that exceed the SIL, EPA requires a cumulative modeling analysis, which incorporates the combined impact of nearby sources of air pollution to determine compliance with the NAAQS and PSD increments.

Table 8.4-2 shows the results of the preliminary or project-only analysis based on maximum operations for SPI- Anderson. Startup emissions are used for determining the maximum 1-hour NO_2, 1-hour and 8-hour CO, and 24-hour PM_{10}, $PM_{2.5}$ impacts with maximum project impacts from normal operations included in parentheses. Startup CO emissions are expected to exceed those experienced during normal operating conditions. Startup and normal 1-hour NO_2 and 24-hour PM_{10}, $PM_{2.5}$ emissions are the same; only the flow rates are lower for the startup case. 1-hour NO_2 impacts are based on the assumption that 80% of the NO is converted to NO_2, while the annual average NO_2 concentrations are based on the assumption that 75% of the NO is converted to NO_2. Based on Table 8.4-2, SPI- Anderson's impacts are significant only for annual and 1-hour NO_2, and 24-hour $PM_{2.5}$, and we have determined that in this case cumulative impacts analyses are required only for these pollutants and averaging periods.

Table 8.4-2: SPI- Anderson Significant Impacts

NAAQS pollutant, Averaging Time	Project-only Modeled Impact ($\mu g/m^3$)	Significant Impact Level ($\mu g/m^3$)	Significant Impact?
NO_2, 1-hour	38.6 (26.3)	7.5 (4 ppb)	Yes
NO_2, annual	1.35	1	Yes
PM_{10}, 24-hour	3.36 (2.23)	5	No
$PM_{2.5}$, 24-hour	3.11 (1.84)	1.2	Yes
$PM_{2.5}$, annual	0.27	0.3	No
CO, 1-hour	307 (122)	2000	No
CO, 8-hour	212 (36)	500	No

Sources: Updated Modeling Analysis (May 2012), Tables 3 and 6pdf8,11

8.4.3 Cumulative impact analysis

A cumulative impact analysis considers impacts from nearby sources in addition to impacts from the project itself. For demonstrating compliance with the NAAQS the applicant also adds a background concentration to represent those sources not explicitly included in the modeling, so that the total accounts for all contributions to current air quality. In this case, the applicant submitted cumulative impact analyses demonstrating compliance with the 24-hour $PM_{2.5}$ NAAQS and the annual and 1-hour NO_2 NAAQS.

PSD increments are limits on cumulative air quality degradation. They are set to prevent air with pollutant concentrations lower than the NAAQS from being degraded to the level of the NAAQS. PSD increments apply in addition to the NAAQS. Increments have been established for some pollutants, such as for this project, specifically for NO_2, PM_{10} and $PM_{2.5}$. For demonstrating compliance with the PSD increment, only increment-consuming sources need to be included because the increment concerns only changes occurring since the applicable baseline date.

There is an annual NO_2 PSD increment, but there is no 1-hour NO_2 PSD increment; therefore, only 24-hour $PM_{2.5}$ and annual NO_2 require cumulative PSD increment analyses.

For evaluating NO_2 annual increment in this analysis, the applicant used all of the same sources that were in the NAAQS inventory, which is conservative.

With respect to the PSD increment analysis for $PM_{2.5}$, the applicable trigger date when the $PM_{2.5}$ increments become effective under the Federal PSD program is October 20, 2011. The SPI- Anderson PSD permit application was determined to be administratively complete by EPA on October 4, 2010. However, EPA is requiring each source that receives its PSD permit after the trigger date, regardless of when the application was submitted, to provide a demonstration that the proposed emissions increase, along with other increment consuming emissions will not cause or contribute to a violation of the $PM_{2.5}$ increments. Also the major source baseline, which precedes the trigger date is the date after which actual emissions increases associated with construction at any major stationary source consume PSD increment. That date is October 20, 2010. With this PSD

permit, SPI-Anderson would begin construction after this date. In general, for $PM_{2.5}$, the minor source baseline date is the earliest date after the trigger date of a complete PSD permit application for a source with a proposed increase in emissions of $PM_{2.5}$ that is significant. No source has triggered the minor source baseline date in the area at issue. Other than SPI- Anderson's projected construction emissions, there have been no actual emissions changes of $PM_{2.5}$ from any new or modified major stationary source on which construction commenced after October 20, 2010. Therefore, the only source to consume $PM_{2.5}$ increment in the area is SPI- Anderson. The applicant considered only the allowable emissions increase from the SPI- Anderson project in the 24-hour $PM_{2.5}$ increment analysis.

8.4.3.1 Nearby source emission inventory

For both the PSD increment and NAAQS analyses, there may be a large number of sources that could potentially be included. Only sources with a significant concentration gradient in the vicinity of the source need to be included; the number of such sources is expected to be small, except in unusual situations. (GAQM 8.2.3)

Shasta and Tehama Counties provided a list of all stationary sources within their counties and within 55.4 km of the project site (approximate distance to the farthest significant impact plus 50 km) for NO_2 and 51.0 km for $PM_{2.5}$. A comprehensive procedure was used to determine which sources were included in the emissions inventory to be modeled. This included screening out a source by whether it had a significant impact where the project was predicted to have a significant impact.

We note that short-term maximum emission rates are used rather than annual emission rates to determine the distance over which a facility might have a significant impact for short-term standards (*e.g.*, hourly NO_2). Use of short-term rates results in the greatest impacts at the farthest distance. Thus, the peak rates that occur during startup determine the SPI- Anderson significant impact area (SIA) for hourly NO_2.

SPI identified nine facilities nearby for inclusion in the emission inventory for the 1-hour NO_2 cumulative analysis, based on data from Shasta and Tehama Counties. The following non-SPI- Anderson facilities and their NO_x and $PM_{2.5}$ emissions are included in the cumulative compliance demonstration: Kiara Co Gen project, Wheelabrator Shasta Co-Gen (NO_x only), Wheelabrator Lassen Gas Turbine (NO_x only), City of Redding power plant (NO_x only), Ag Products Asphalt (NO_x only), JF Shea Smith Road Asphalt, Lehigh Cement (NO_x only), North State Asphalt (NO_x only), and Tehama Processing (NO_x only). These facilities are large enough and close enough to the project site to have the potential to directly impact the project's SIA. (Updated Air Dispersion Modeling Analysis, Tables 13-14pdf.20-21).

Current EPA NO_2 guidance recommends that emphasis on determining which nearby sources to include in the nearby source inventory should focus on the area within about 10 km of the project location in most cases. This indicates that the SPI- Anderson inventory is adequate for performing these cumulative analyses (p.16 of "Additional Clarification Regarding Application of Appendix W Modeling Guidance for the 1-hour

NO_2 National Ambient Air Quality Standard", Memorandum from Tyler Fox, EPA Air Quality Modeling Group to EPA Regional Air Division Directors, March 1, 2011).

Considering a focus on sources within 10 km, EPA concludes that the combination of representative background monitored concentrations and the additional consideration of sources out to 50 km provide sufficient justification for the inventories used in the cumulative analysis.

8.4.3.2 Discussion of Certain $PM_{2.5}$-Specific Considerations

EPA has issued guidance on how to combine modeled results with monitored background concentrations which the applicant adequately followed. ("Modeling procedures for Demonstrating Compliance with $PM_{2.5}$ NAAQS", memorandum from Stephen D. Page, Director, EPA OAQPS, March 23, 2010.)

SPI provided a cumulative $PM_{2.5}$ 24-hour analysis. The applicant's analysis conservatively assumed that all PM_{10} emissions were comprised of $PM_{2.5}$ emissions, and therefore used PM_{10} emissions data as input to the modeling. Thus, actual $PM_{2.5}$ impacts are expected to be lower than those indicated in the model results.

$PM_{2.5}$ is either directly emitted from a source (primary emissions) or formed through chemical reactions with pollutants already in the atmosphere (secondary formation). EPA has not developed and recommended a near-field model that includes the necessary chemistry algorithms to estimate secondary impacts in an ambient air analysis.

The SPI- Anderson application does not specifically address secondarily formed $PM_{2.5}$ (as distinguished from directly emitted primary $PM_{2.5}$). Secondary $PM_{2.5}$ is formed through the emission of non-particulates (*i.e.*, gases) – such as SO_2 and NO_x – that turn into fine particulates in the atmosphere through chemical reactions or condensation. Using the results for $PM_{2.5}$ impacts given in Tables 8.4-2 and 8.4-3 and the projected emission rates of SO_2, NO_x and $PM_{2.5}$, EPA notes that the SPI- Anderson emissions of 10.3 tpy SO_2 are less than the SO_2 SER of 40 tpy, and would not be expected to result in significant secondary $PM_{2.5}$. The SPI- Anderson NO_x emissions of 267 tpy are above the NO_x SER of 40 tpy. However, secondary $PM_{2.5}$ formation occurs only as a result of chemical transformations that would affect only a portion of those emissions. Moreover, the formation occurs gradually over time as the plume travels and becomes increasingly diffuse and would be expected to be considerably smaller than the impacts from the 42.1 tpy of directly emitted primary $PM_{2.5}$. The maximum impact of source primary $PM_{2.5}$ was 3.11 $\mu g/m^3$ for 24-hour $PM_{2.5}$ and 0.27 $\mu g/m^3$ for annual $PM_{2.5}$. The 24-hour $PM_{2.5}$ cumulative impacts analysis which gives a maximum impact of 28.8 ug/m^3, with a background concentration of 15.3 ug/m^3, indicates that at least 6.2 $\mu g/m^3$ remains available for the 24-hour averaging time before the NAAQS is challenged (35 $\mu g/m^3$ – 28.8 $\mu g/m^3$). For the annual averaging time no cumulative impact analysis was required because the project's annual impacts were less than the SIL. However, the background concentration was 5.3 $\mu g/m^3$. Adding this result to the project's predicted impact of 0.27 $\mu g/m^3$ yields a concentration of 5.57 $\mu g/m^3$. This result is less than a third of the NAAQS and leaves about 9 $\mu g/m^3$ remaining before the NAAQS is challenged. The

monitored background $PM_{2.5}$ concentrations would also conservatively include secondarily formed $PM_{2.5}$ from the surrounding/nearby sources. Because the secondary $PM_{2.5}$ formation from SPI- Anderson's NO_x emissions would be expected to be considerably smaller than the primary $PM_{2.5}$ impacts, they would also be smaller than the additional 6.2 $\mu g/m^3$ or 9 $\mu g/m^3$ needed to cause or contribute to a $PM_{2.5}$ NAAQS violation. In addition, most of these chemical transformations in the atmosphere occur slowly (over hours or even days, depending on atmospheric conditions and other variables), causing secondary $PM_{2.5}$ impacts to occur generally at some distance from the source of its gaseous emissions precursors, and are unlikely to overlap with nearby maximum primary $PM_{2.5}$ impacts.

8.4.3.3 Discussion of Certain 1-hour NO_2-Specific Considerations

While the new 1-hour NO_2 NAAQS is defined relative to ambient concentrations of NO_2, the majority of NO_x emissions from stationary sources are in the form of nitric oxide (NO) rather than NO_2. GAQM notes that the impact of an individual source on ambient NO_2 depends in part "on the chemical environment into which the source's plume is to be emitted" (see Section 5.1.j). Because of the role NO_x chemistry plays in determining ambient impact levels of NO_2 based on modeled NO_x emissions, Section 5.2.4 of GAQM recommends a three-tiered screening approach for NO_2 modeling. Later guidance documents issued by EPA expand on this approach. Tier 1 assumes full conversion of NO to NO_2. Tiers 2 and 3 are refinements of the amount of conversion of NO to NO_2. The applicant used the Tier 2 approach, in which the 1-hour NO_2 impacts are based on the assumption that 80% of the NO is converted to NO_2, while the annual average NO_2 concentrations are based on the assumption that 75% of the NO is converted to NO_2.

A. NO_2 monitor representativeness/conservativeness

The applicant chose the Manzanita Avenue monitor in Chico for background NO_2 concentrations. This monitor is approximately 90 km from the SPI- Anderson site and is the closest NO_2 monitor to the project site. No other NO_2 monitor is located within 90 km of the site. Despite its distance from the project site, the monitor from Chico is conservative based on its proximity to a more industrial area at the north end of the Sacramento Valley.

B. Combining modeled and monitored values

SPI used one of the approaches in an EPA March 2011 memo which recommends using the 98th percentile of the annual distribution of daily maximum 1-hour values averaged across the most recent three years of monitored data as a uniform background contribution to the modeled results. This procedure is based on a conservative assumption.

EPA believes that the applicant's overall approach to the 1-hour NO_2 analysis for the SPI- Anderson project, including the emission inventory, background concentrations of NO_2 and the method for combining model results with monitored values, is adequately conservative.

8.4.3.4 Startup and Shutdown Analyses

As stated in Section 8.3.5, the applicant estimated boiler NO_x emissions during startup and shutdown to be the same as those during normal operations, but with lower flow rates, thus the applicant also modeled for startup and shutdown. The stack parameters input into the model such as exit temperature and exhaust velocity were consistent with a flow rate equal to approximately 60% of that associated with a full load, and a reduced exhaust temperature of 250 °F or 394 degrees K (Updated Air Dispersion Modeling Analysis, May 2012). The startup period may last up to 24 hours from a "cold" (ambient temperature) furnace with the initial fire employing natural gas-fired burners combusting pipeline natural gas. SPI- Anderson anticipates only two planned cold startup and shutdown events during the year for maintenance.

8.4.3.5 Results of the Cumulative Impacts Analysis

The results of the PSD cumulative impacts analysis for SPI- Anderson's normal operations for $PM_{2.5}$ and startup emissions for 1-hour NO_2 are shown in Table 8.4-3. The analysis demonstrates that emissions from SPI- Anderson will not cause or contribute to exceedances of the NAAQS for annual and 1-hour NO_2 or 24-hour $PM_{2.5}$ or for the increments for annual NO_2 or 24-hour $PM_{2.5}$. The background concentrations were taken from Table 8.2-1.

EPA also considered additional information to ensure that the modification would not be responsible for causing a new NAAQS exceedance outside this modeling area. EPA considered sources in Shasta and Tehama Counties (no sources of interest were located outside of these counties) that were not included, but which had been evaluated for inclusion/exclusion in the cumulative impacts modeling. EPA concluded that these sources are either small enough or distant enough that the project's expected emissions along with emissions from these sources would not create any new NAAQS exceedance in the modeling area outside of the SIA.

Table 8.4-3: SPI- Anderson Compliance with Class II PSD Increments and NAAQS

Pollutant. Averaging Time	All Sources Modeled Impact	Background Concentration	Cumulative Impact w/ Background	NAAQS ($\mu g/m^3$)	PSD Increment Consumption	PSD Increment
NO_2, 1-hour	94	62.7	157	188 (100 ppb)	NA	NA
NO_2, annual	1.75	33.1	34.8	100 (53)	1.75	25
$PM_{2.5}$, 24-hour	13.5	15.3	28.8	35	3.36	9

Notes: - There are no PSD increments defined for 1-hour NO_2.
Sources:
NO_2, $PM_{2.5}$ (NAAQS): Updated Air Dispersion Modeling Analysis (May 2012) Tables 15 and 16pdf22-23: $PM_{2.5}$ increment consumption less than all sources modeled impact due to non-increment consuming fugitive source at SPI- Anderson being included in NAAQS analysis.

8.4.3.6 Impact on Ozone Levels

There is a projected 267 tpy increase in NO_x emissions. Shasta County is an attainment area for O_3. There are four O_3 monitors located in the Redding area. The highest design value from these monitors is 71 ppb. The monitor with the highest value is located on the north side of Redding about 25 km from SPI-Anderson. The NAAQS is exceeded if the design value is 75 ppb. As explained further below, there is no evidence in any recent O_3 regional modeling that an increase in 267 tpy of NO_x would result in a 4 ppb O_3 increase and threaten the NAAQS.

The emissions of VOC and NO_x that react to form O_3 come from a variety of local and regional anthropogenic and natural source categories. Anthropogenic VOC emissions are associated with evaporation and combustion processes, especially industrial processes and transportation. Natural VOC emissions from vegetation are much larger than those from anthropogenic sources. Anthropogenic NO_x emissions are associated with combustion processes, especially mobile sources and electric power generation plants. Major natural sources of NO_x include lightning, soils, and wildfires. Given the large number of local and regional VOC and NO_x sources affecting O_3 concentrations in a given area, the impact of any single emission source is generally very small.

Furthermore, given the complex nature of O_3 chemistry, the response of the O_3 system can be rather stiff in certain areas, meaning that it generally takes a substantial change in precursor emissions to produce a discernible change in O_3 concentrations on a single day. For example, modeling performed for the San Joaquin Valley 2007 Ozone Plan for the Hanford site indicates changes in NO_x emissions over the entire air basin on the order of 20% may increase O_3 by approximately 6% to 7%. Another assessment tool used in the San Joaquin Valley scaled the San Joaquin Valley 2007 Ozone Plan's *Arvin 2023 Ozone Response Diagram* to estimate the change in ozone per change in NO_x emissions. Using this information and scaling the 267 tpy of NO_x emissions from the proposed modification would result in O_3 increases well below 1 ppb.

8.5 Class I Area Analysis

8.5.1 Air Quality Related Values

The four nearest Class I areas are all within 100km of the project site and are listed below:

- Yolla Bolly – Middle Eel Wilderness Area (57 km)
- Thousand Lakes Wilderness (62 km)
- Lassen National park (64 km)
- Caribou Wilderness Area (89 km)

There are five additional areas within 200 km: Marble Mountain Wilderness Area (116 km), Redwood National Park (147km), Lava Beds National Monument (148 km) and South Warner Wilderness Area (192km).

Based on the most recent Federal Land Managers' Air Quality Related Values (AQRV) Work Group (FLAG) (2010) published guidance, the following screening approach is used to determine whether a more refined Class I Air Quality Analysis is required. This approach only applies to projects located more than 50 km from a Class I area, and it requires adding all of the visibility-related emissions (SO_2, NO_x, PM_{10} and sulfuric acid mist) from a project (based on 24-hour maximum allowable emissions expressed in units of tpy), known as *Q*, and dividing *Q* by the distance *D* between the project and Yolla Bolly, the nearest Class I area. If the result (*Q*/*D*) is less than 10, the project is presumed to have negligible impacts to Class I AQRVs. Table 8.5-1 shows that the project's Q/D is 5.39, well below the FLAG screening criteria. Therefore, no further Class I AQRV analysis is required.

Table 8.5-1 Summary of Q/D Analysis

Project parameter	Value
NOx Emissions Increase (tpy)	254 (1)
SO2 Emissions Increase (tpy)	9.78 (2)
PM10 Emissions Increase (tpy)	39.1 (3)
H2SO4 Emissions Increase (tpy)	4.12 (4)
Q = project Emissions Increase (tpy) = (1) + (2) + (3)+ (4)	307
D= Distance to Closest Class I Area (km)	57
Q/D (tpy/km)	5.39
Q/D Threshold (tpy/km)	10

8.5.2 Class I Increment Consumption Analysis

EPA requires an analysis addressing Class I increment impacts for applicable pollutants, regardless of the results of the Class I AQRV analysis. The analysis for annual NO_2 and PM_{10} and for PM_{10} 24-hour was included in the original application submitted in 2007. Based on the results, EPA did not require updated modeling to be submitted with the 2010 PSD application because of the very low predicted impacts. The applicant provided a $PM_{2.5}$ Class I increment analysis in *Updated Air Dispersion Modeling Analysis* (May 2012) for Yolla Bolly, the closest Class I area, because this would provide the most conservative results. The applicant used the original CALPUFF results from the *Original PSD Application* (May 2007) and the CALPUFF post processing programs. To obtain $PM_{2.5}$ concentrations, coarse PM, sulfate, and nitrate fractions were removed from the post-processing originally used to develop PM_{10} concentrations. The results are presented in Table 8.5-2.

SPI's application was complete on October 4, 2010. There have been no changes in actual emissions of $PM_{2.5}$ from any major stationary source on which construction commenced after October 20, 2010, the major source baseline date for $PM_{2.5}$, for purposes of analyzing $PM_{2.5}$ increment consumption here. Also, no source has triggered the minor source baseline date in the area at issue. Therefore, for purposes of this Class I $PM_{2.5}$ increment analysis, we consider only SPI- Anderson's increment consumption. Because

SPI- Anderson's impacts are much less than the Class I SILs, and the Class I SILs are much lower than the increments, SPI- Anderson's maximum impacts are well below the $PM_{2.5}$ increments. Therefore, the applicant has demonstrated that the project will not cause or contribute to any Class I PSD increment violation for $PM_{2.5}$. Additionally, NO_2 and PM_{10} impacts are well below their respective significant impact levels; therefore, the applicant has demonstrated the project will not cause or contribute to any Class I violation for PM_{10} or NO_2.

Table 8.5-2: SPI- Anderson Class I Increment Impacts at Two Closest Class I Areas

Class I Area	Pollutant, Averaging Time	Project Impact ($\mu g/m^3$)	Significant Impact Level ($\mu g/m^3$)	Class I PSD Increment, ($\mu g/m^3$)
Yolla Bolly-Middle Eel Wilderness	NO_2, annual	0.0006	0.1	2.5
	$PM_{2.5}$, 24-hour	0.012	0.07	2
	$PM_{2.5}$, annual	0.0006	0.06	1
	PM_{10}, 24-hour	0.06	0.3	8
	PM_{10}, annual	0.002	0.2	4
Thousand Lakes Wilderness	NO_2, annual	0.0009	0.1	2.5
	PM_{10}, 24-hour	0.018	0.3	8
	PM_{10}, annual	0.001	0.2	4

Source: For NO_2 and PM_{10} impacts: Original PSD Application, Table 5-3 pdf.48. For $PM_{2.5}$ impacts: Updated Air Dispersion Modeling Analysis, p.6pdf.6.

9. Additional Impact Analysis

In addition to assessing the ambient air quality impacts expected from a proposed new source, the PSD regulations require that EPA evaluate other potential impacts on 1) soils and vegetation; 2) growth; and 3) visibility impairment. 40 CFR § 52.21(o). The depth of the analysis generally depends on existing air quality, the quantity of emissions, and the sensitivity of local soils, vegetation, and visibility in the source's impact area.

9.1 *Soils and Vegetation*

The additional impact analysis includes consideration of potential impacts to soils and vegetation associated with the SPI- Anderson emissions. 40 CFR § 52.21(o). This component generally includes:

- a screening analysis to determine if maximum modelled ground-level concentrations of project pollutants could have an impact on plants; and
- a discussion of soils and vegetation that may be affected by proposed project emissions and the potential impacts on such soils and vegetation associated with such emissions.

The proposed project will be within the physical footprint of disturbed land that is part of the existing facility operations of the SPI- Anderson sawmill parcel located in Shasta County, California. The applicant presented its discussion of potential impacts on soils

and vegetation as part of its PSD application and supplemental application information (from 2007 through 2012 submittals) and its biological review information (from 2007 and 2010). This information is further discussed below regarding the modification's potential deposition on soils and the project's modeled impacts compared to EPA's screening concentrations and secondary NAAQS.

The potential impact on soils from air pollutants through deposition is presented in the 2007 application (Section 5.0) as part of the Class I AQRV analysis. Additionally, the applicant reviewed the U.S. Department of Agriculture Natural Resources Conservation Service's Web Soil Survey[8]; soils in the area had pH ratings of between 5.3 and 6.5. A current review of the same area indicates that the same soil types (primarily various types of loam with some cobbly alluvial areas) and pH (5.3 to 6.5) are present. Then, as now, the modeled deposition fluxes of nitrogen and sulfur attributable to the project are unlikely to alter or influence the pH of soils in the area.

With respect to the April 2010 updated biological review, the applicant included an expanded project study area beyond the original 2007 evaluation. Soil characteristics of the habitat of the federally listed plant species, the slender Orcutt grass, are described. Its general habitat includes vernal pools (and similar habitat), reservoir edges of stream floodplains, clay soils with seasonal inundation in valley grassland to coniferous forest or sagebrush scrub. Likewise, it is not expected that the project's emissions will adversely affect the habitat of this species.

The applicant's May 2012 application supplement presents an updated air dispersion modeling analysis from its 2010 application update. Project impacts are presented for normal project-only (refer to May 2012, Table 3) and startup and shutdown project-only (refer to May 2012, Table 6) modeling results.[9] The project's SO_2, NO_2 and CO concentrations were compared to EPA screening concentrations in EPA's "Screening procedure for the Impacts of Air pollution Sources on plants, Soils and Animals" (1980)[10]. The screening procedure is used as a tool to identify if the project could have an impact on plants, soils, and animals. The project's impacts do not exceed the screening concentrations for these pollutants. Table 9.1-1 summarizes this information.

[8] Web Soil Survey: http://websoilsurvey.nrcs.usda.gov

[9] Tables 4 and 6 of the May 2012 correspondence were not relied upon because these tables refer to the State and local permit process, which rely on the State ambient air standards; Tables 3 and 5 are relevant for the federal PSD permit process.

[10] "Screening Procedure for the Impacts of Air Pollution Sources on Plants, Soils, and Animals," EPA 450/2-81-078, December 1980.

Table 9.1-1: Project Maximum Concentrations and EPA Guidance Levels for Screening Concentrations for Ambient Exposures

Criteria pollutant, Guidance Averaging Time	EPA Screening Concentration ($\mu g/m^3$)	Modeled Maximum Concentrations ($\mu g/m^3$)	Model Averaging Time
SO_2, 1-Hour	917	1.67	1 hour
SO_2, 3-Hours	786 (0.30 ppm)	1.55 (0.0006 ppm)	3 hour
SO_2, Annual	18	0.07	Annual
NO_2, 4-Hours	3,760	40.0	1 hour
NO_2, 8-Hours	3,760	40.0	1 hour
NO_2, 1-Month	564	40,0	1 hour
NO_2, Annual	94 (0.05 ppm)	1.35 (0.0007 ppm)	Annual
CO, Weekly	1,800,000	212	8 hour

The project's impacts were also compared to the secondary NAAQS. For most types of soils and vegetation, ambient concentrations of criteria pollutants below the secondary NAAQS will not result in harmful effects because the secondary NAAQS are set to protect public welfare, including animals, plants, soils, and materials. The modeled maximum concentrations of SO_2, NO_2, $PM_{2.5}$, and PM_{10} are also significantly below the secondary NAAQS that have been established by EPA:[11]

Table 9.1-2: Project Maximum Concentrations and Secondary NAAQS Standards

Pollutant, Averaging Time	Secondary NAAQS ($\mu g/m^3$)	Modeled Maximum Concentrations ($\mu g/m^3$)
SO_2, 3-hour	1,300 (0.5 ppm)	1.55 (0.0006 ppm)
NO_2, Annual	100 (0.053 ppm)	1.35 (0.0007 ppm)
PM_{10}, 24-hour	150	3.36
$PM_{2.5}$, 24-hour	35	3.11
$PM_{2.5}$, Annual	15	0.27

In sum, based on our consideration of the information and analysis provided by the applicant, and other relevant information, we do not believe that emissions associated with the project will generally result in adverse impacts to soils or vegetation.

[11] EPA has not promulgated a secondary NAAQS for CO.

9.2 *Visibility Impairment*

The additional impact analysis also evaluates the potential for visibility impairment (*e.g.*, plume blight) associated with SPI- Anderson. 40 CFR § 52.21(o). Using procedures from EPA's Workbook for Plume Visual Impact Screening and Analysis[12], the potential for visibility impairment is characterized for:

- Class I areas located within 50 km of the proposed SPI- Anderson modification; and
- Class II areas identified as potentially sensitive state or federal parks, forests, monuments, or recreation areas.

There are no Federal Class I areas located within 50 km of the project site; the nearest Class I area is Yolla Bolly-Middle Eel (57 km away). The next nearest Class I area is Thousand Lakes Wilderness Area (62 km away). For nearby Class II areas or recreation areas, the applicant evaluated visibility impairment for the following within 50 km of the project site:

- Sacramento River National Wildlife Refuge (NWR) 38.8 km at its closest point;
- Whiskeytown National Recreation Area (NRA) 18.3 km at its closest point.

EPA has not yet established a quantitative visibility impairment threshold for Class II areas (similar to what exists for Class I areas). We requested that the applicant conduct a Level 1 VISCREEN analysis, and, if necessary, a Level 2 screening analysis for these two areas.

For Whiskeytown NRA and Sacramento River NWR, the impact of the project on visibility impairment, also known as plume blight, was assessed. The EPA VISCREEN screening model was used to estimate visibility impairment to these two areas from the project's emissions. Effects of plume blight are assessed as changes in plume perceptibility (ΔE) and plume contrast (C_p) for sky and terrain backgrounds. A Level 1 analysis, using default meteorological data and no site-specific conditions, was conducted. Because the results of the Level 1 screening analyses indicated that some of the screening criteria were exceeded, a Level 2 analysis was conducted for both areas. A detailed discussion of the VISCREEN plume blight impact analysis is presented in the applicant's Class II Area Visibility analysis submitted by the applicant to EPA in July 2012.

The results of the Level 2 VISCREEN modelling runs are presented below in Tables 9.2-1, 9.2-2, 9.2-3 and 9.2-4. The VISCREEN results are presented for the two default worst case theta angles – theta equal to 10 degrees representing the sun being in front of an observer, and theta equal to 140 degrees representing the sun being behind the observer. A negative plume contrast means the plume has a darker contrast than the background sky.

[12] "Workbook for Plume Visual Impact Screening and Analysis (Revised)", EPA, EPA–454/R–92–023, 1992.

Table 9.2-1: Whiskeytown NRA Class II VISCREEN Modelling Results of Changes in Plume Perceptibility (ΔE)

Background	Distance (km)	Plume Perceptibility (ΔE)		
		Theta 10	Theta 140	Criteria
Sky	37.1	0.408	0.24	2.00
Terrain	37.1	0.911	0.187	2.00

Table 9.2-2: Whiskeytown NRA Class II VISCREEN Modeling Results of Changes in Plume Contrast (C_p)

Background	Distance (km)	Plume Contrast (C_p)		
		Theta 10	Theta 140	Criteria
Sky	37.1	0.005	-0.003	0.05
Terrain	37.1	0.007	0.001	0.05

Table 9.2-3: Sacramento River NWR Class II VISCREEN Modelling Results of Changes in Plume Perceptibility (ΔE)

Background	Distance (km)	Plume Perceptibility (ΔE)		
		Theta 10	Theta 140	Criteria
Sky	50.0	0.724	0.47	2.00
Terrain	38.9	1.209	0.104	2.00

Table 9.2-4: Sacramento River NWR Class II VISCREEN Modelling Results of Changes in Plume Contrast (C_p)

Background	Distance (km)	Plume Contrast (C_p)		
		Theta 10	Theta 140	Criteria
Sky	50.0	0.01	-0.006	0.05
Terrain	38.9	0.008	0.001	0.05

The results from the VISCREEN model show that changes in plume perceptibility and plume contrast for sky and terrain backgrounds inside these two areas are below the criteria thresholds. Therefore, the plume would not be perceptible against a sky or terrain background.

Consequently, EPA guidance indicates that these results may be used to determine that the project will not contribute to visibility impairment, and no further analysis is required.

9.3 *Growth*

The growth component of the additional impact analysis involves a discussion of general commercial, residential, industrial, and other growth associated with SPI- Anderson. 40 CFR § 52.21(o). This analysis considers emissions generated by growth that will occur in the area due to the modification. In conducting this review, we focus on residential, commercial and industrial growth that is likely to occur to support the source under review including employment expected during construction and operations and

potential growth impacts associated with this employment, this as impacts to local population and housing needs

EPA does not expect this project to result in any significant growth. Construction of the proposed cogeneration unit would span between 14 and 18 months. Laydown and temporary worker parking areas will be located within the existing facility property boundary. During construction approximately 40 temporary workers would be added, however this demand would be mitigated by the use of existing employees.

Once the cogeneration unit is operational, the facility expects to employ approximately eight additional workers. The project will utilize existing roads and infrastructure, and no additional roads or transportation infrastructures are proposed for construction. We do not expect the new cogeneration unit to cause significant growth in the area.

10. Endangered Species

Pursuant to Section 7 of the Endangered Species Act (ESA), 16 U.S.C. 1536, and its implementing regulations at 50 CFR Part 402, EPA is required to ensure that any action authorized, funded, or carried out by EPA is not likely to jeopardize the continued existence of any endangered or threatened species or result in the destruction or adverse modification of such species' designated critical habitat. EPA has determined that this PSD permitting action is subject to ESA Section 7 requirements.

The construction activities resulting from the proposed modification will occur on SPI-Anderson's existing facility footprint. All storm water runoff will be contained on the site. Power lines to be constructed between the new transformer and the existing switch yard will be strung overhead. It is anticipated that there will be three sets of suspended wooden poles to span the distance between the existing switch yard and the transformer to be located near the turbine building.

SPI has confirmed that construction activities will not occur within 100 feet of the elderberry shrubs that are in the Pacific Gas and Electric power line Right of Way. The nearest construction activity to the existing elderberry plants will be the erection of the electrical power poles at the existing electrical sub-station which are 137 feet away from the nearest elderberry shrub. The main construction area, where the boiler, turbine building, fuel shed, electrical substation cooling tower, and ESP will be built, is approximately 1,000 feet from the nearest elderberry shrub.

EPA concludes that the project will have no likely adverse effect on any endangered or threatened species or designated critical habitat. Discussions with the United States Fish and Wildlife Service support EPA's conclusion.

11. Environmental Justice Screening Analysis

Executive Order 12898, entitled "Federal Actions To Address Environmental Justice in

Minority populations and Low-Income populations," states in relevant part that "each Federal agency shall make achieving environmental justice part of its mission by identifying and addressing, as appropriate, disproportionately high and adverse human health or environmental effects of its programs, policies, and activities on minority populations and low-income populations." Section 1-101 of Exec. Order 12898, 59 Fed. Reg. 7629 (Feb. 16, 1994).

This AAQIR concludes that the proposed modification will not cause or contribute to air quality levels in excess of health standards for the pollutants regulated under EPA's proposed PSD permit for the proposed modification, and that the project will not result in disproportionately high and adverse human health or environmental effects with respect to these air pollutants on populations residing near the SPI- Anderson site, or on the community as a whole.

12. Clean Air Act Title V (Operating Permit)

The SPI Anderson facility already must comply with a Title V Operating Permit, SCAQMD Permit #94VP18c. After the proposed cogeneration unit is constructed, SCAQMD Permit #94VP18c will need to be revised to appropriately reflect the facility's current operations. The SCAQMD has jurisdiction to issue the Title V Operating Permit for SPI- Anderson.

13. Comment Period, Procedures for Public Hearing Requests, Final Decision, and EPA Contact

The comment period for EPA's proposed PSD permit for the project begins on September 12, 2012. Pursuant to 40 CFR 124.12, EPA has discretion to hold a Public Hearing if we determine there is a significant amount of public interest in the proposed permit. Requests for a Public Hearing must state the nature of the issues proposed to be raised in the hearing. If a Public Hearing is to be held, a public notice stating the date, time and place of the hearing will be made at least 30 days prior to the hearing. Reasonable attempts will be made to notify directly any person who has commented on this proposal of any pending Public Hearing, provided contact information has been given to the EPA contact person listed below.

Any interested person may submit written comments or request a Public Hearing regarding EPA's proposed PSD permit for this modification. All written comments and requests on EPA's proposed action must be received by EPA via e-mail by October 17, 2012, or postmarked by October 17, 2012**.** Comments or requests must be sent or delivered in writing to Omer Shalev at one of the following addresses:

E-mail: R9airpermits@epa.gov

U.S. Mail: Omer Shalev (AIR-3)
U.S. EPA Region 9

75 Hawthorne Street
San Francisco, CA 94105-3901
Phone: (415) 972-3538

Comments should address the proposed permit modification and facility, including such matters as:

1. The Best Available Control Technology (BACT) determinations;
2. The effects, if any, on Class I areas;
3. The effect of the proposed facility on ambient air quality; and
4. The attainment and maintenance of the NAAQS.

All information submitted by the applicant is available as part of the administrative record. The proposed air permit, fact sheet/ambient air quality impact report, permit application and other supporting information are available on the EPA Region 9 website at http://www.epa.gov/region09/air/permit/r9-permits-issued.html#pubcomment. The administrative record may also be viewed in person, Monday through Friday (excluding federal holidays) from 9:00 AM to 4:00 PM, at the EPA Region 9 address above. Due to building security procedures, please call Omer Shalev at (415) 972-3538 at least 24 hours in advance to arrange a visit. Hard copies of the administrative record can be mailed to individuals upon request in accordance with Freedom of Information Act requirements as described on the EPA Region 9 website at http://www.epa.gov/region9/foia/.

EPA's proposed PSD permit for the proposed modification and the accompanying fact sheet/ambient air quality impact report are also available for review at the Shasta County Air Quality Management District at 1855 Placer St., Suite 101 in Redding, CA 96001, and the Redding Public Library at 1100 Parkview Ave. in Redding, CA 96001.

All comments that are received will be included in the public docket without change and will be available to the public, including any personal information provided, unless the comment includes Confidential Business Information (CBI) or other information whose disclosure is restricted by statute. Information that you consider CBI or otherwise protected should be clearly identified as such and should not be submitted through e-mail. If you send e-mail directly to the EPA, your e-mail address will be automatically captured and included as part of the public comment. Please note that an e-mail or postal address must be provided with your comments if you wish to receive direct notification of EPA's final decision regarding the permit.

EPA will consider all written and oral comments submitted during the public comment period before taking final action on the PSD permit modification and will send notice of the final decision to each person who submitted comments and contact information during the public comment period or requested notice of the final permit decision. EPA will respond to all substantive comments in a document accompanying EPA's final permit decision.

EPA's final permit decision will become effective 30 days after the service of notice of the decision unless:

1. A later effective date is specified in the decision; or
2. The decision is appealed to EPA's Environmental Appeals Board pursuant to 40 CFR Part 124.19; or
3. There are no comments requesting a change to the proposed permit decision, in which case the final decision shall become effective immediately upon issuance.

If EPA issues a final decision granting the PSD permit for this modification, and there is no appeal, construction of the modification may commence, subject to the conditions of the PSD permit and other applicable permit and legal requirements.

If you have questions, please contact Omer Shalev at (415) 972-3538 or e-mail at R9airpermits@epa.gov. If you would like to be added to our mailing list to receive future information about this proposed permit decision or other PSD permit decisions issued by EPA Region 9, please contact Omer Shalev at (415) 972-3538 or send an e-mail to R9airpermits@epa.gov, or visit EPA Region 9's website at http://www.epa.gov/region09/air/permit/psd-public-guidelines.html.

14. Conclusion and Proposed Action

EPA is proposing to modify the PSD permit for SPI-Anderson facility owned and operated by SPI. We believe that the proposed project will comply with PSD requirements including the installation and operation of BACT, and will not cause or contribute to a violation of the NAAQS, or of any PSD increment. We have made this determination based on the information supplied by the applicant and our review of the analyses contained in the permit application. EPA will provide the proposed permit and this AAQIR to the public for review, and make a final decision after considering any public comments on our proposal.

Appendix A- Greenhouse Gas Emissions Estimates

Boiler- Biomass And Natural Gas Emission Rates

Pollutant	Biomass Emission Factor (Heat Input)[i]		Natural Gas Emission Factor (Heat Input)[i]		Heat Input for Unit (MMBtu/hr)	Biomass Emission Rate	Natural Gas Emission
	(kg/MMBtu)	(lb/MMBtu)	(kg/MMBtu)	(lb/MMBtu)		(lb/hr)	(lb/hr)
CO_2	93.8	207	66.83	147.3	468	96,876	68,952
CH_4	0.032	0.0705	0.001	0.002205	468	33	1
N_2O	0.0042	0.00926	0.0001	0.000220	468	4	0

Discussion: EPA's *Deferral for CO_2 emissions from Bioenergy and Other Biogenic Sources under the Prevention of Significant Deterioration and Title V programs* (76 FR 43490 July 20, 2011) applies to this modification. Therefore, the determination of PSD applicability for GHG will exclude CO_2 emissions from the burning of biomass fuel for this proposed modification. The boiler is allowed to burn natural gas during startup and shutdown, but the proposed PSD permit limits the annual heat input from natural gas to not exceed 10% of total heat input on an annual basis. Assuming 8,760 hours of operation per year, the total maximum non-deferred emissions of GHG from this boiler are:

Boiler Worst-Case Annual Emission Rate

Pollutant	Biomass Emission Rate (lb/hr)	Natural Gas Emission Rate (lb/hr)	Biomass Operation (hours)	Natural Gas Operation (hours)	Biomass Emissions (tpy)	Natural Gas Emissions (tpy)	Global Warming potential	CO_2e
CO2	96,876	68,952	7,884	876	381,885	30,200.99	1	412,086
CH4	33	1	7,884	876	130	0.45	21	2,741
N2O	4	0	7,884	876	17	0.05	310	5,310
Total	-	-	-	-	-	-	-	**420,137**

Emergency Engine Emission Rate

Pollutant	Natural Gas Emission Rate (lb/hr)	Natural Gas Operation (hours)[ii]	Natural Gas Emissions (tpy)	Global Warming potential	CO_2e
CO2	507	500	126.71	1	127
CH4	0.008	500	0.00	21	0
N2O	0.001	500	0.00	310	0
Total	-	-	-	-	**127**

Total Boiler CO_2e without CO_2 from biomass

= 2,741 (from CH_4) + 5,310 (from N_2O) + 30,201 (from Natural Gas CO_2)

= 38,252 CO_2e

Total Emergency Engine CO_2e from Natural Gas
= 127 CO_2e

Total Project CO_2e
= Boiler CO2e + Emergency Engine CO2e
= 38,252 CO_2e +127 CO_2e
= 38,379 CO_2e

As calculated above, total annual CO_2e emissions excluding CO_2 are 38,379 tpy of CO_2e, which is below the GHG "subject to regulation" threshold of 75,000 tpy. As a result, the modification is not subject to BACT requirements for GHG.

---

[i] The kg/MMBtu emission factors for combustion of wood and wood residual solid biomass fuel, as well as natural gas, are from 40 CFR Part 98, Tables C-1 and C-2; 1kg= 2.2046 lb
[ii] The emergency engine is limited to 100 hours of nonemergency use per year. The table conservatively assumes 500 hours of use per year.