BP Carson Refinery

- 1937, 50 MBPD
- 2008, 260 MBPD
- Today produce >6MGD of gasoline
  - > 25% of LA usage
- >15% of the jet fuel for lax

Water Use

- Refineries use water
- In the beginning
  - well water was plentiful and inexpensive
- As time went on
  - incremental water came from potable water sources
- In the mid 1990s
  - wells started to foul and lose yield and we needed to find another source

Recycle water – Phase 1

- In 2000, started using recycle water for refinery cooling towers
  - About 50-70% of the refinery cooling water is recycle water

Recycle water – Phase 2

- In 2007, started up a new reverse osmosis plant to make BFW from recycle water
  - All the refinery BFW is now from recycle water

Recycle water – Phase 3

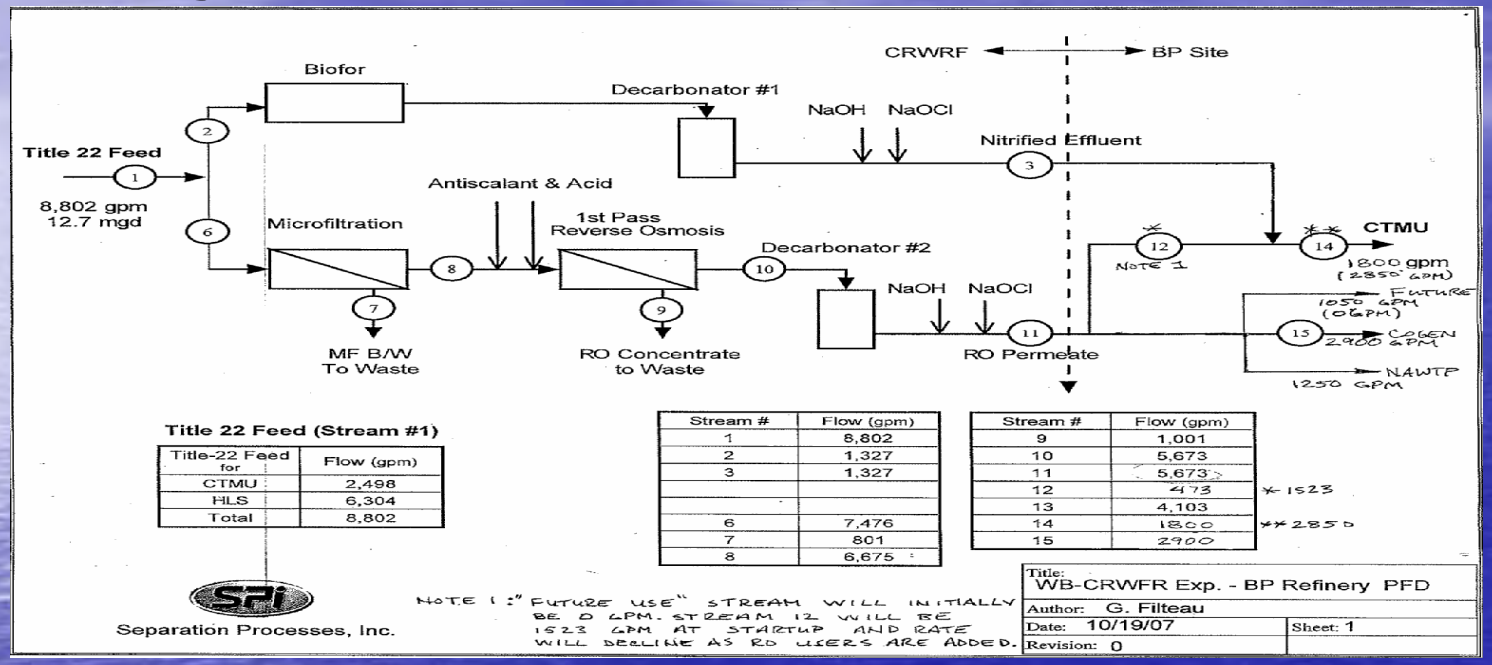

- Working with West Basin to put our Cogen and the rest of the refinery cooling water demand on recycle water, 2011-2013?

Past, Present and Future

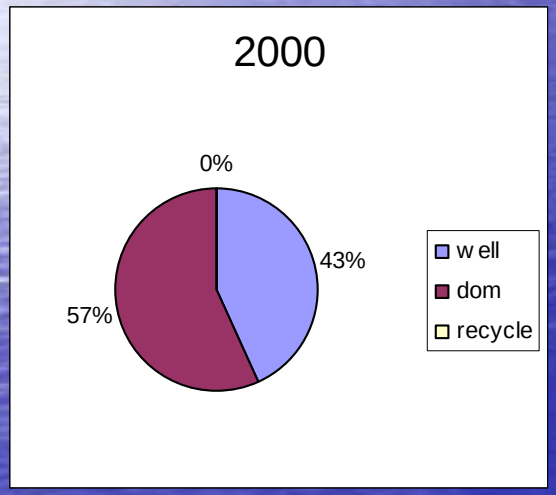

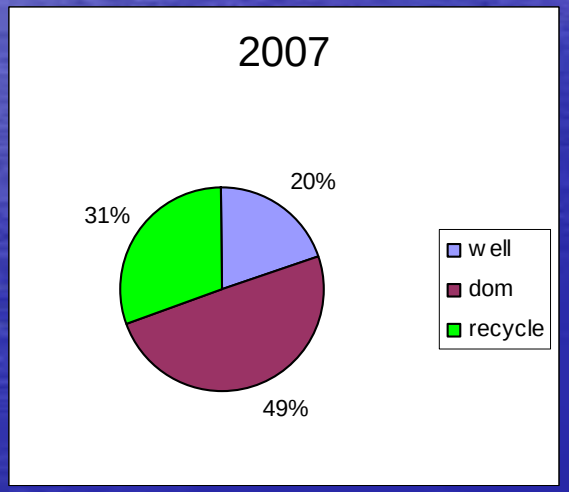

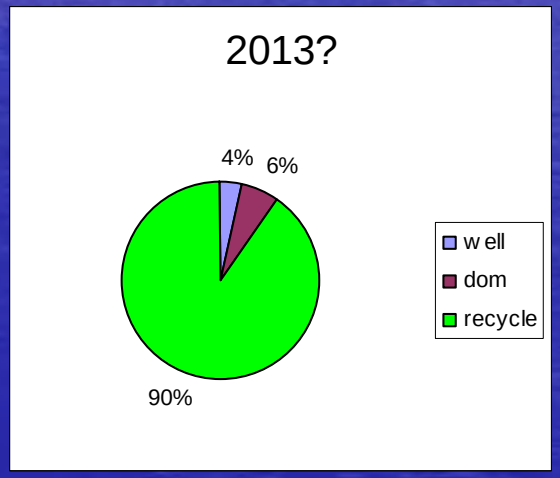

Questions?