DESERET POWER
ELECTRIC COOPERATIVE

12500 East 25500 South
Vernal, Utah 84078
(435) 789-9000 Fax: (435) 781-5816

April 3, 2012

Mr. Carl Daly
Director, Air and Radiation
USEPA Region 8
1595 Wynkoop Street
mc 8P-AR
Denver, Colorado 80202-1129

Re: Updated Title V Application for the Bonanza Power Plant

Dear Mr. Daly,

Please find enclosed in this submittal to EPA Region 8, a copy of the information you requested in your letter dated February 6, 2012 regarding the update of the Title V permit application for the Bonanza Power Plant. The plant is owned and operated by Deseret Generation and Transmission Cooperative, and is located 28 miles southeast of Vernal, Utah.

This submittal consists of a CD containing a copy of all the relevant information required for this permit application update, required forms, and a copy of all the Excel spreadsheets used to calculate potential emissions from all plant emission sources.

If you have any questions regarding this updated application or need further assistance, please contact Eric Olsen of my staff at 435-781-5706 or eolsen@deseretpower.com.

Sincerely,

Eugene Grindle
Plant Manager

BONANZA STATION - UNIT 1

RESUBMITTED APPLICATION
FOR
OPERATING PERMIT
UNDER
CAA TITLE 4 AND 5

SUBMITTED TO:
U.S. EPA, Region 8
1595 Wyncoop Street
Denver, CO 80202-1129

BY:
Deseret Generation and Transmission Co-operative
10741 South Jordan Gateway
South Jordan, UT 84095

April 2012

United States Environmental Protection Agency

OMB No. 2060-0336, Approval Expires 04/30/2012

Federal Operating Permit Program (40 CFR Part 71)

POTENTIAL TO EMIT (PTE)

For each unit with emissions that count towards applicability, list the emissions unit ID and the PTE for the air pollutants listed below and sum them up to show totals for the facility. You may find it helpful to complete form **EMISS** before completing this form. Show other pollutants not listed that are present in major amounts at the facility on attachment in a similar fashion. You may round values to the nearest tenth of a ton. Also report facility totals in section **J** of form **GIS**.

Emissions Unit ID	Regulated Air Pollutants and Pollutants for which the Source is Major (tons/yr)						
	NO_x	VOC	SO_2	PM10	CO	Lead	HAP
Main Boiler (Coal/Fuel Oil)	9225.0	70.2	2347.4	2372.5	501.9	0.95	67.7
Auxiliary Boiler (Fuel Oil)	0.60	UN	1.8	0.03	0.13	UN	0.0002
Emergency Diesel Generator (Fuel Oil)	0.62	UN	0.001	0.01	0.16	0.0002	0.0005
Emergency Diesel Fire Pump (Fuel Oil)	0.32	UN	0.02	0.02	0.07	0.00	0.0003
Construction Heaters (Propane)	1.5	UN	0.007	0.08	0.26	UN	UN
EXISTING FACILITY TOTALS	**9228.0**	**70.2**	**2347.4**	**2372.6**	**502.5**	**1.0**	**67.7**
Main Boiler* (Natural Gas)	2765.7	108.7	11.9	150.1	1659.4	0.01	1.7
Auxiliary Boiler** (Natural Gas)	0.48	0.02	0.002	0.03	0.29	0.00	0.0003

* Estimated PTE if the main boiler is converted to natural gas.
**Estimated PTE if the auxiliary boiler is converted to natural gas.

United States Environmental Protection Agency

OMB No. 2060-0336, Approval Expires 04/30/2012

Federal Operating Permit Program (40 CFR Part 71)

INITIAL COMPLIANCE PLAN AND COMPLIANCE CERTIFICATION (I-COMP)

SECTION A - COMPLIANCE STATUS AND COMPLIANCE PLAN

Complete this section for each unique combination of applicable requirements and emissions units at the facility. List all compliance methods (monitoring, recordkeeping and reporting) you used to determine compliance with the applicable requirement described above. Indicate your compliance status at this time for this requirement and compliance methods and check "YES" or "NO" to the follow-up question.

Emission Unit ID(s): 1-1

Applicable Requirement (Describe and Cite)
EPA PSD operating permit # EPA-UO-001-2001 is the operating permit for the Bonanza Power Plant

Compliance Methods for the Above (Description and Citation): Hourly Continuous Emissions Monitoring, Quarterly Excess emissions reporting, annual particulate testing
The compliance and monitoring requirements are contained in Appendix H of the application

Compliance Status:

_X_ In Compliance: Will you continue to comply up to permit issuance? _X_ Yes ____No

___ Not In Compliance: Will you be in compliance at permit issuance? ___Yes ___No

___ Future-Effective Requirement: Do you expect to meet this on a timely basis? ____Yes ____No

Emission Unit ID(s):

Applicable Requirement (Description and Citation):

Compliance Methods for the Above (Description and Citation):

Compliance Status:

___ In Compliance: Will you continue to comply up to permit issuance? ____Yes ____No

___ Not In Compliance: Will you be in compliance at permit issuance? ___Yes ___No

___ Future-Effective Requirement: Do you expect to meet this on a timely basis? ____Yes _____No

B. SCHEDULE OF COMPLIANCE

Complete this section if you answered "NO" to any of the questions in section A. Also complete this section if required to submit a schedule of compliance by an applicable requirement. Please attach copies of any judicial consent decrees or administrative orders for this requirement.

Unit(s)_____N/A_____ Requirement_____

Reason for Noncompliance. Briefly explain reason for noncompliance at time of permit issuance or that future-effective requirement will not be met on a timely basis:

Narrative Description of how Source Compliance Will be Achieved. Briefly explain your plan for achieving compliance:

Schedule of Compliance. Provide a schedule of remedial measures, including an enforceable sequence of actions with milestones, leading to compliance, including a date for final compliance.

Remedial Measure or Action	Date to be Achieved

C. SCHEDULE FOR SUBMISSION OF PROGRESS REPORTS

Only complete this section if you are required to submit one or more schedules of compliance in section B or if an applicable requirement requires submittal of a progress report. If a schedule of compliance is required, your progress report should start within 6 months of application submittal and subsequently, no less than every six months. One progress report may include information on multiple schedules of compliance.

Contents of Progress Report (describe):

First Report____/____/___ Frequency of Submittal_____

Contents of Progress Report (describe):

First Report____/____/___ Frequency of Submittal_____

D. SCHEDULE FOR SUBMISSION OF COMPLIANCE CERTIFICATIONS

This section must be completed once by every source. Indicate when you would prefer to submit compliance certifications during the term of your permit (at least once per year).

Frequency of submittal: Annual Beginning: 04/ 01 / 2013

E. COMPLIANCE WITH ENHANCED MONITORING & COMPLIANCE CERTIFICATION REQUIREMENTS

This section must be completed once by every source. To certify compliance with these, you must be able to certify compliance for every applicable requirement related to monitoring and compliance certification at every unit.

Enhanced Monitoring Requirements: __X__ In Compliance ____ Not In Compliance

Compliance Certification Requirements: __X__ In Compliance ____ Not In Compliance

United States Environmental Protection Agency

OMB No. 2060-0336, Approval Expires 04/30/2012

Federal Operating Permit Program (40 CFR Part 71)

CERTIFICATION OF TRUTH, ACCURACY, AND COMPLETENESS (CTAC)

This form must be completed, signed by the "Responsible Official" designated for the facility or emission unit, and sent with each submission of documents (i.e., application forms, updates to applications, reports, or any information required by a part 71 permit).

A. Responsible Official

Name. (Last) Grindle (First) Eugene (MI) ____

Title. Plant Manager

Street or P O Box: 12500 East 25500 South

City: Vernal State: UT ZIP: 84078

Telephone (435) 781-5701 Ext. ____ Facsimile (435) 781-5816

B. Certification of Truth, Accuracy and Completeness (to be signed by the responsible official)

I certify under penalty of law, based on information and belief formed after reasonable inquiry, the statements and information contained in these documents are true, accurate and complete.

Name (signed) ____

Name (typed) Eugene Grindle Date: 4 / 3 / 2012

LIST OF APPENDICES

Appendix A: Site Plan

Appendix B: Process Flow Diagram

Appendix C: Description of Process and Equipment

Appendix D: Description of All Potentials to Emit (PTE)

Appendix E: List and Descriptions of Any Insignificant Emission Units

Appendix F: List of All Air Pollution Control Equipment

Appendix G: List and Descriptions of All Compliance Monitoring Equipment and EPA Test Methods Used

Appendix H: List and Description of All Applicable Requirements

Appendix I: List of Exemptions Requested

Appendix J: Emissions Trading Information

Appendix K: Compliance Plan and Schedule

Appendix L: Compliance Certification

Appendix M: State Provisions

Appendix N: Acid Rain Provisions

Appendix A

Site Plan

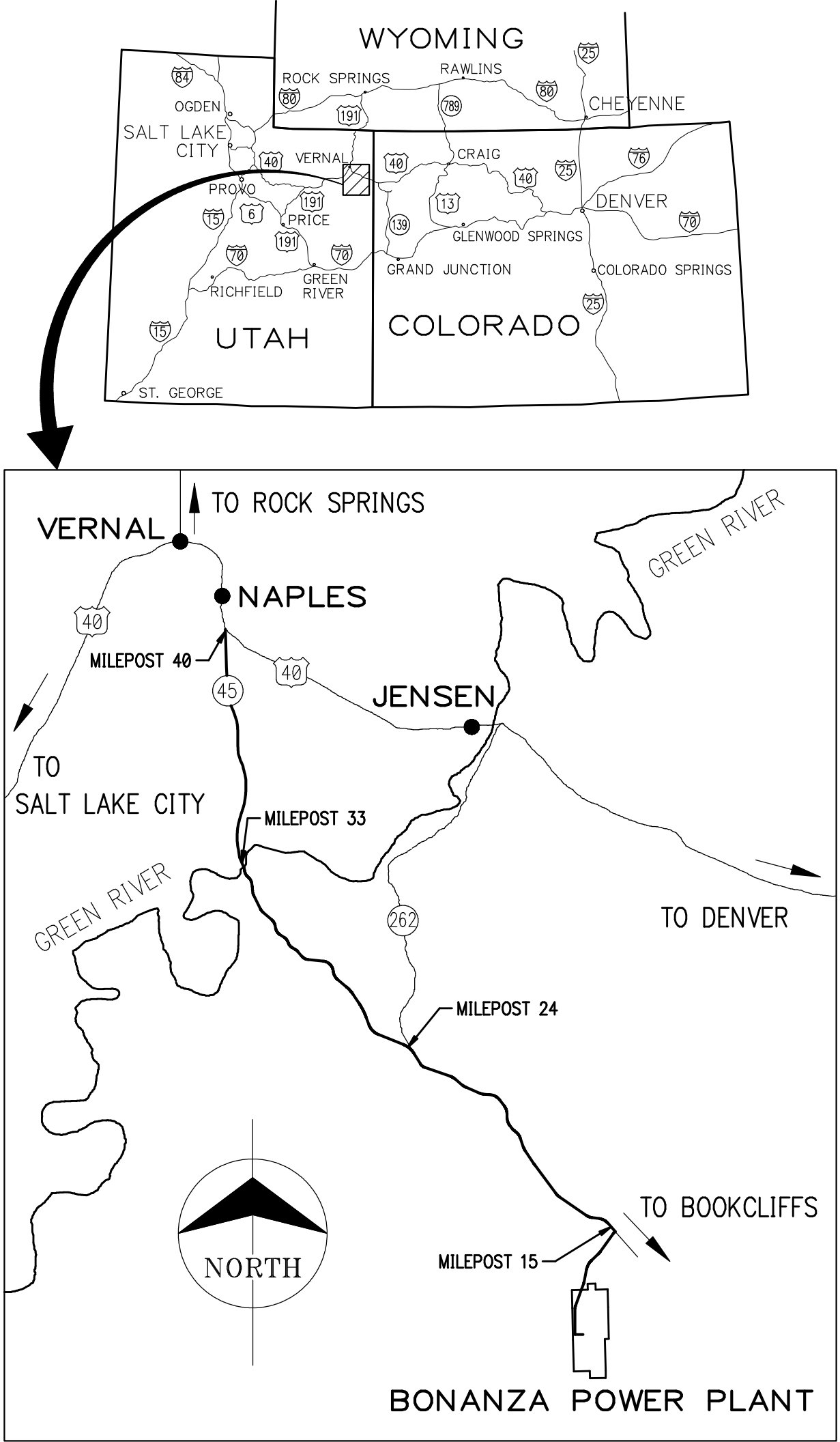
WYOMING
ROCK SPRINGS
RAWLINS
CHEYENNE
OGDEN
SALT LAKE CITY
VERNAL
PROVO
PRICE
RICHFIELD
GREEN RIVER
ST. GEORGE
UTAH
CRAIG
DENVER
GLENWOOD SPRINGS
GRAND JUNCTION
COLORADO SPRINGS
COLORADO
TO ROCK SPRINGS
VERNAL
NAPLES
MILEPOST 40
JENSEN
TO SALT LAKE CITY
MILEPOST 33
GREEN RIVER
TO DENVER
MILEPOST 24
NORTH
TO BOOKCLIFFS
MILEPOST 15
BONANZA POWER PLANT

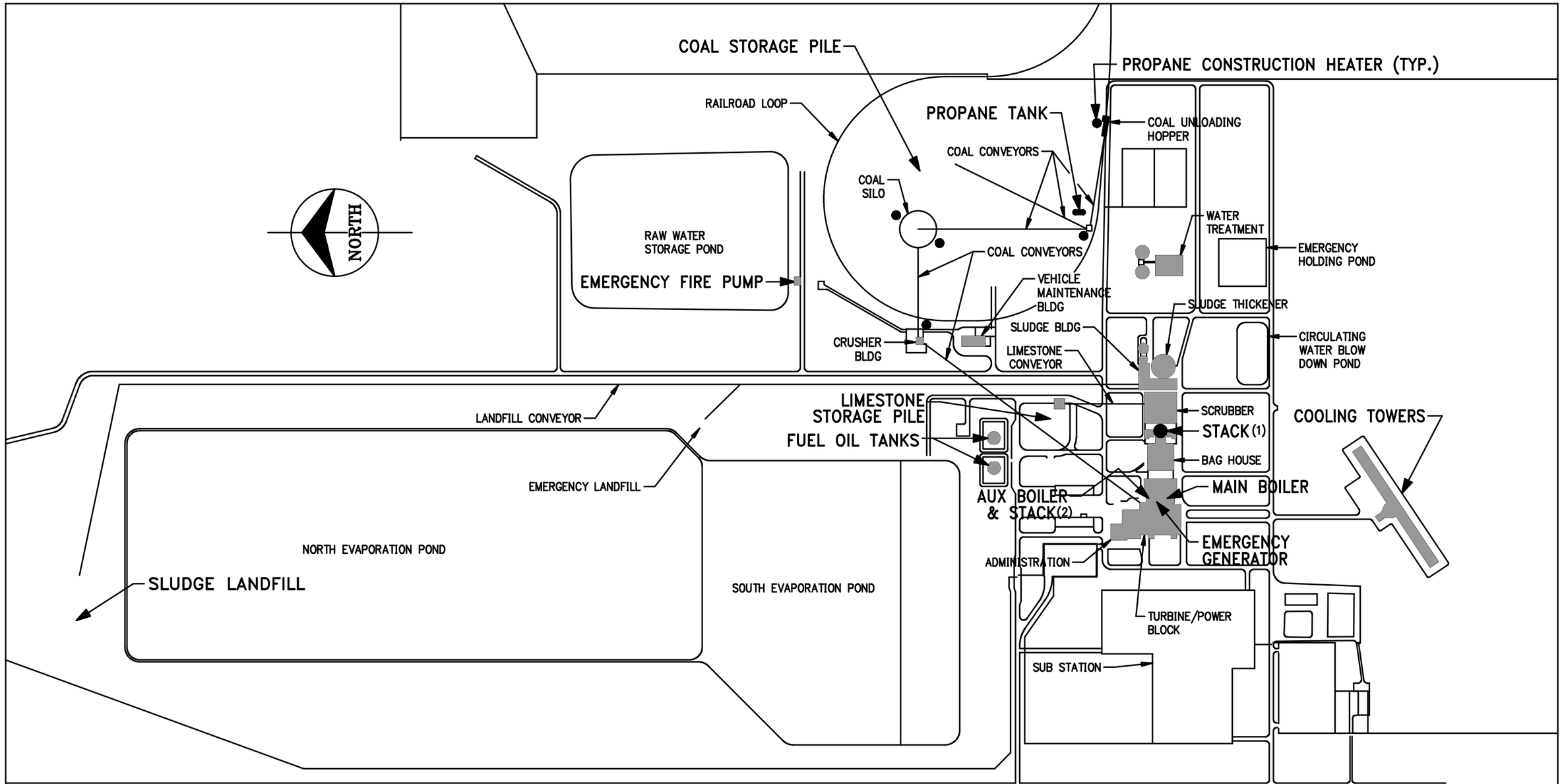

2

1

Deseret
Generation & Transmission Co-operative

TITLE:
BONANZA POWER PLANT

CAD FILE NAME: TTL5_A2.DWG

					ENG	BY	DATE	DRAFT	BY	DATE	W.O. No. 9504192	
					ENG	MG	11/95	DRAWN	KBS	11/95	DWG. No. A—2	SHEET 1 OF 1
1	W.O. 9504192	11/95	KBS	MG	APVD			CHK	MG	11/95		REV. 1
No.	REVISIONS	DATE	BY	APVD	PLOT SCALE: NO SCALE			APVD				

PLANT STACK PARAMETERS

Bonanza Power Plant Unit 1 Stack Parameters

Stack 1. The plant's main stack is 600 feet high. It is constructed with a concrete column with an acid resistant brick liner. The exit diameter is 26 feet with an average exit temperature of approximately 120° F. The stack flow rate is approximately 1,380,000 SCFM based on testing. The continuous emission monitoring sampling equipment is located at the 330 foot level.

Stack 2. The auxiliary boiler stack is located in the main boiler building and extends through the roof. It is 240 feet high and has an exit diameter of 4.75 feet. The average exit temperature is 600° F when it is in operation. The stack flow rate is approximately 1,000 SCFM estimated.

Appendix B

Process Flow Diagram

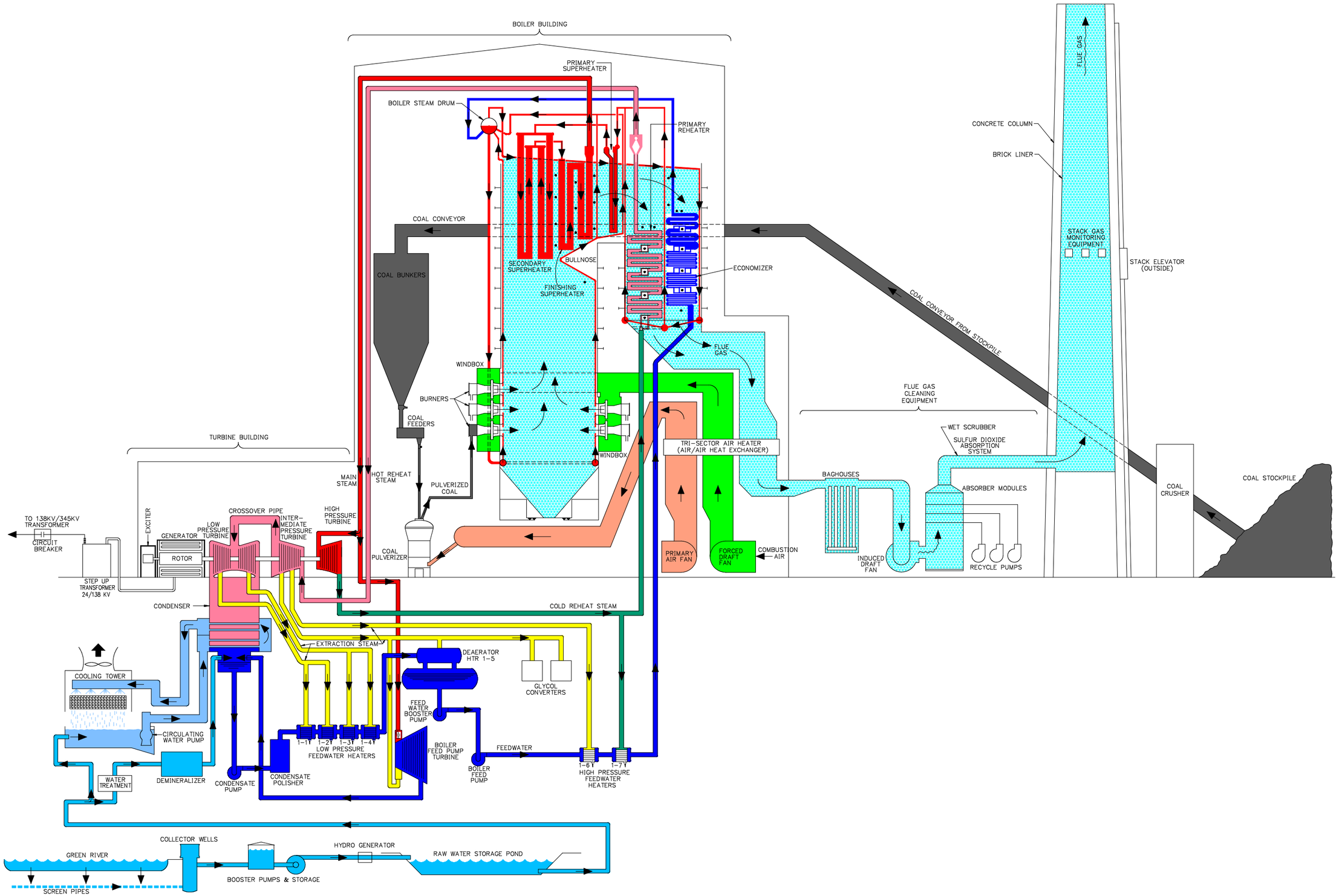

NO.	DATE	BY	REVISION
1	6/95	KBS	CONVERTED TO CAD
2	3/10	KBS	NEW BORDER/DP LOGO
3	2/12	KBS	REDRAWN

DATE	DESIGNED	DETAILED	CHECKED
6/95	KJS	KBS	KJS

DESERET POWER ELECTRIC COOPERATIVE

BONANZA POWER PLANT
VERNAL, UTAH

CROSS SECTION

PIPING & INSTRUMENT DIAGRAM | F/N: DD00.DWG

DRAWING B-1 | REV. 3

GENERAL PROCESS FLOW DIAGRAM

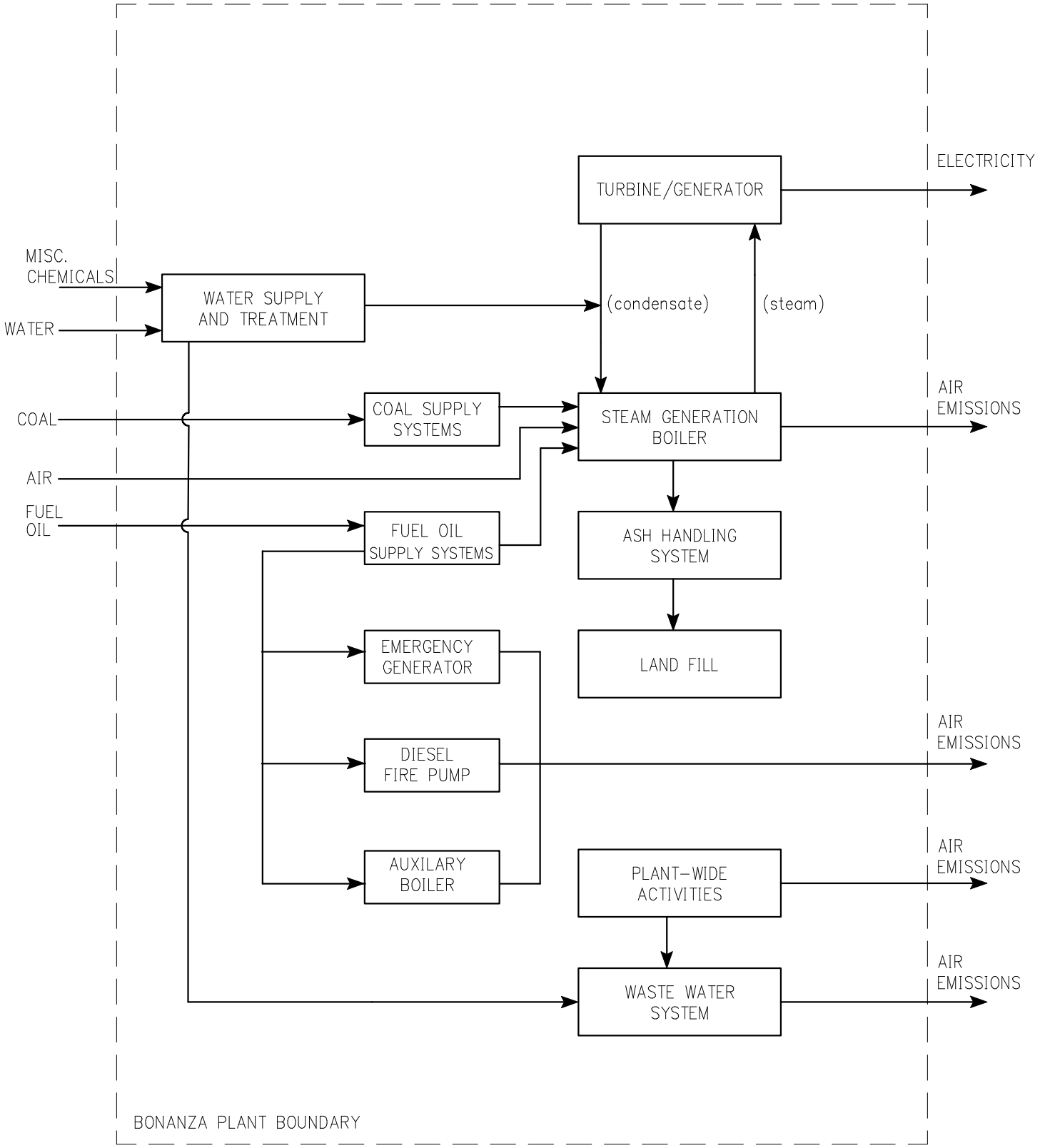

STEAM GENERATION AND ASH HANDLING EMISSION UNIT IDENTIFICATION

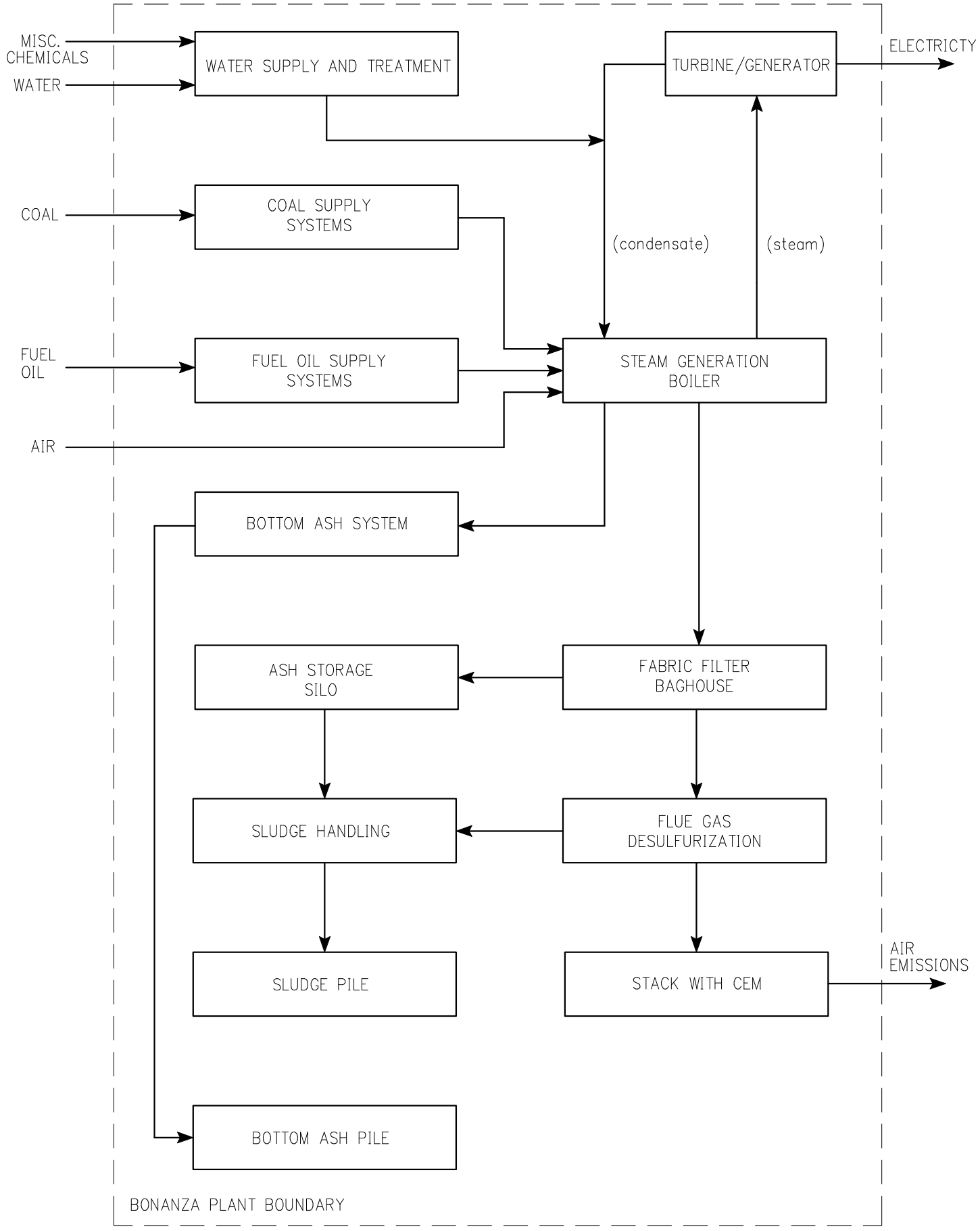

FUEL SUPPLY SYSTEM–COAL HANDLING EMISSION UNIT IDENTIFICATION

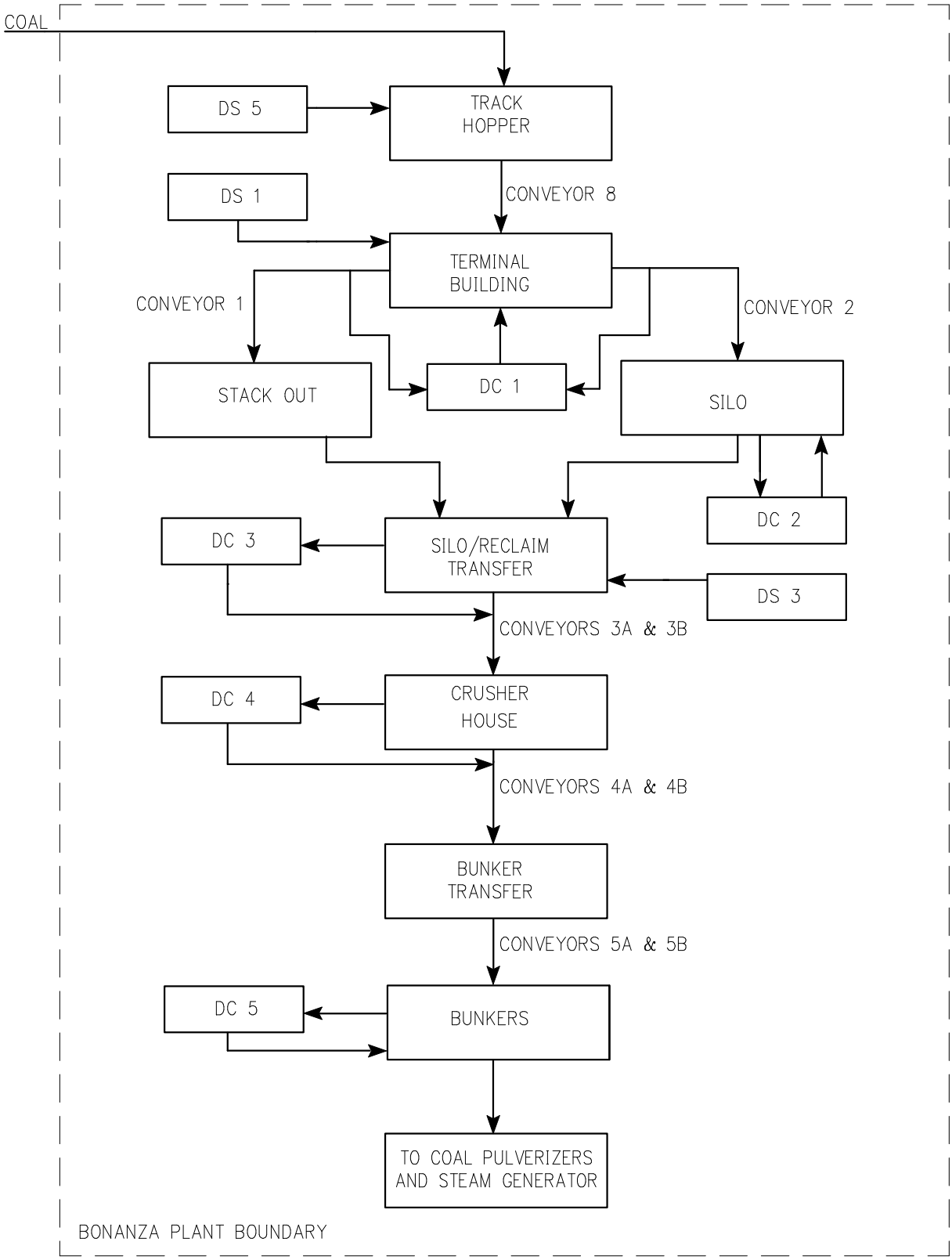

LEGEND

BCV – BLOW BACK/CAL VALVE
CA# – CLEAN AIR VALVE
CG# – CALIBRATION GAS NUMBER
CV – CHECK VALVE
CV# – CHECK VALVE NUMBER
RV# – REGULATOR VALVE
PS# – SUPERVISORY PRESSURE SWITCH
FCV – FAST CAL VALVE
CS# – CAL SUPPLY VALVE
FLT – INLINE FILTER (0.5 MICRON)
ABV – AIR BLOCKING VALVE
MPC – MAXIMUM POTENTIAL CONCENTRATION
MEC – MAXIMUM EXPECTED CONCENTRATION

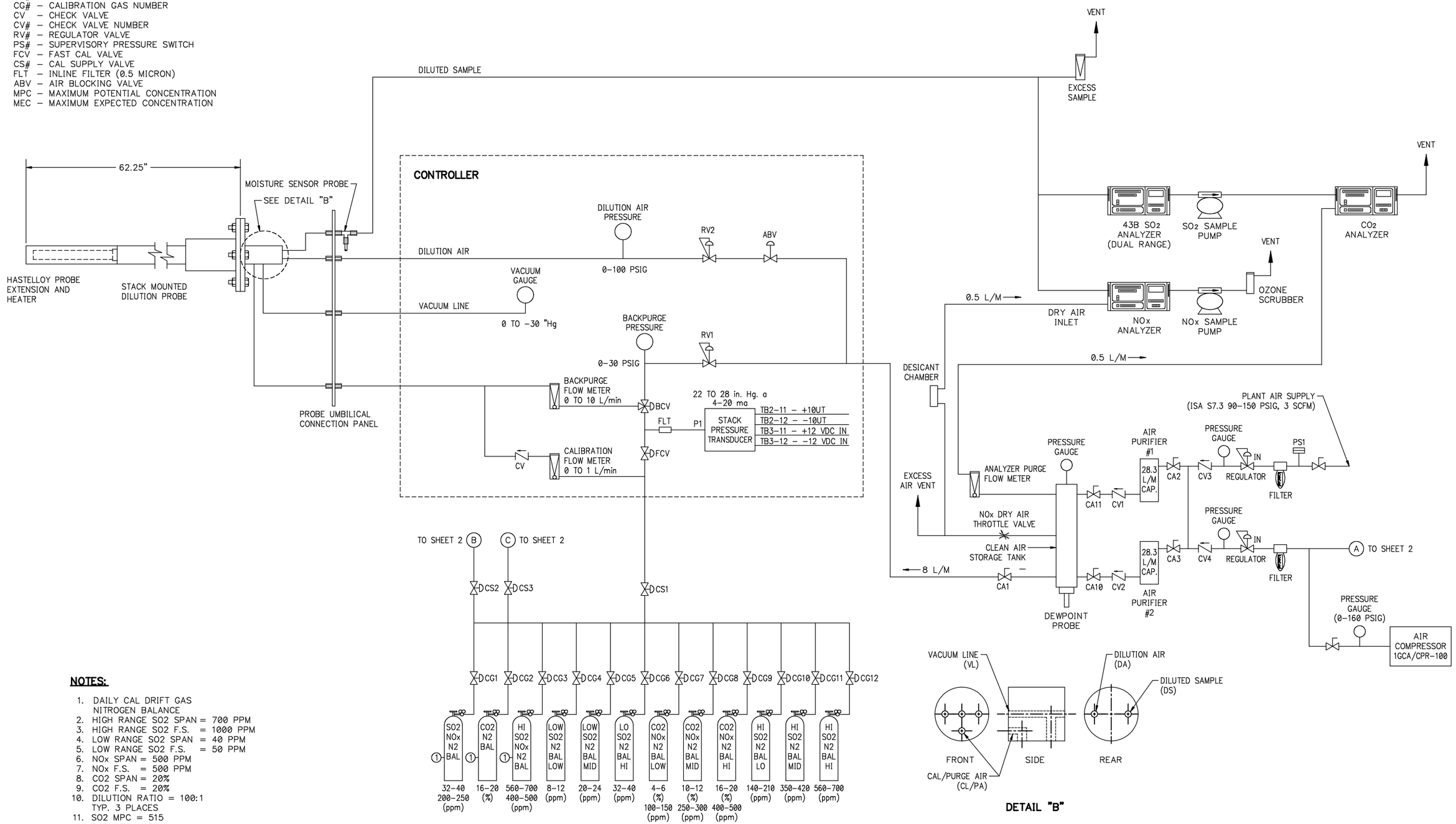

DETAIL "B"

NOTES:

1. DAILY CAL DRIFT GAS NITROGEN BALANCE
2. HIGH RANGE SO2 SPAN = 700 PPM
3. HIGH RANGE SO2 F.S. = 1000 PPM
4. LOW RANGE SO2 SPAN = 40 PPM
5. LOW RANGE SO2 F.S. = 50 PPM
6. NOx SPAN = 500 PPM
7. NOx F.S. = 500 PPM
8. CO2 SPAN = 20%
9. CO2 F.S. = 20%
10. DILUTION RATIO = 100:1 TYP. 3 PLACES
11. SO2 MPC = 515
12. SO2 MEC = 32

No.	REVISIONS	DATE	BY	APVD
0	INTERNAL REVIEW	12/95	KBS	MG

REFERENCE DRAWINGS

Deseret Generation & Transmission Co-operative

TITLE
CEM SYSTEM SCHEMATIC
STACK PIPING
BONANZA POWER PLANT

VENDOR/DWG#: SPECTRUM SYSTEMS INC / DE03
CAD FILE NAME: TTL5_B5.DWG

	BY	DATE
ENG		
ENG	MG	12/95
APVD		

PLOT SCALE: 1=1

	BY	DATE
DRAFT		
DRAWN	KBS	12/95
CHK	MG	12/95
APVD		

W.O. No.
DWG. No. B–5
SHEET 1 OF 2
REV. 0

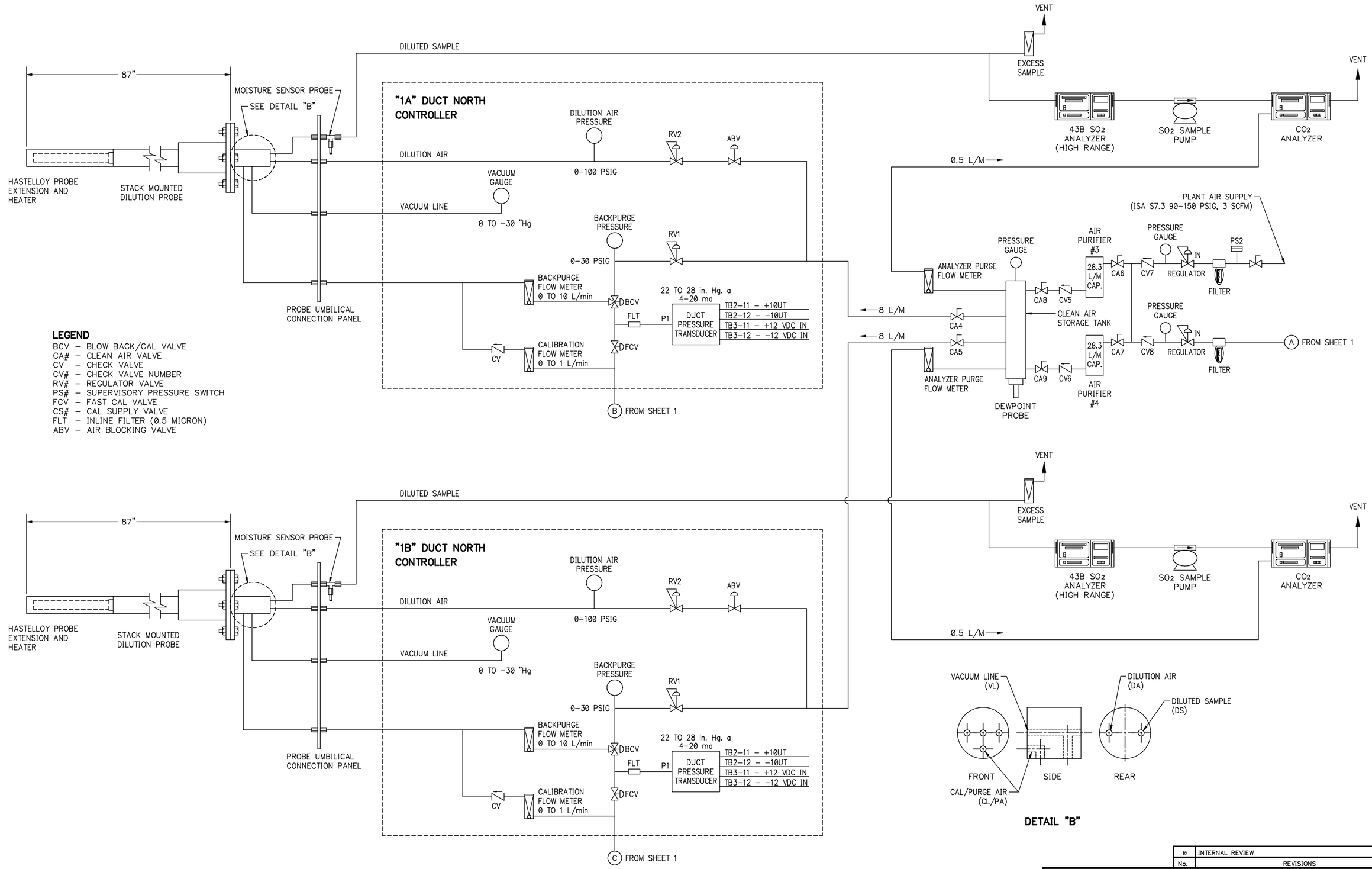

No.	REVISIONS	DATE	BY	APVD
0	INTERNAL REVIEW	12/95	KBS	MG

REFERENCE DRAWINGS

Deseret Generation & Transmission Co-operative

TITLE
CEM SYSTEM SCHEMATIC
STACK PIPING
BONANZA POWER PLANT

VENDOR/DWG#: SPECTRUM SYSTEMS INC / DE03

CAD FILE NAME: TTL5_B6.DWG

	BY	DATE		BY	DATE	W.O. No.
ENG			DRAFT			
ENG	MG	12/95	DRAWN	KBS	12/95	DWG. No.
APVD			CHK	MG	12/95	
PLOT SCALE: 1=1			APVD			

B-6

SHEET 2 OF 2

REV. 0

Appendix C

Description of Process and Equipment

DESCRIPTION OF PROCESS AND EQUIPMENT

General Plant Description

The Bonanza Power Plant Unit 1 is an approximate 500 megawatt gross, coal fired generating facility. It consists of a Foster Wheeler Steam Generator capable of producing over 3,200,000 lbs of steam an hour. The turbine generator is a Westinghouse tandem compound, two-flow reheat unit. Water for the unit is transported approximately 20 miles from the Green River near Jensen, Utah. Coal is mined near Rangely, Colorado at the co-operatives' Deserado mine and transported via an electric railroad 35 miles to the plant site. The project was originally developed for two generating units, however due to the downturn of the petroleum industry in the late 1980's the second unit has been postponed indefinitely. The power is used to supply the co-operatives' members in Utah and surrounding states or sold on the open market.

Fuel Systems

Bituminous, low sulfur coal is the primary fuel source for the plant. The coal is pulverized to the consistency of talcum powder and fired into the boiler. The unit has the capability to burn 260 tons of coal per hour and 6,240 tons per day. Low NO_x burners are used in the boiler for NO_x emission control.

Fuel oil is used to start up the main boiler from a cold start and to change pulverizing equipment on line. It is also used to operate the auxiliary boiler during shutdowns and for cold unit starts. Fuel oil is used to operate the plant's emergency diesel generator and the emergency diesel fire pump. It is stored in two 288,000 gallon tanks on site.

Diesel refueling is performed on site for heavy equipment via an above ground 20,000 gallon tank. A gasoline refueling station, using an above ground 10,000 gallon storage tank, is also on the plant site for smaller vehicles. Propane is used to heat outlying coal handling buildings via construction heaters. The propane storage tank holds 30,000 gallons.

Turbine Generator System

The generating process involves converting mechanical energy to electrical energy. The turbine generator uses steam produced by the boiler to generate electricity. The turbine generator uses a lube oil system, which includes a main reservoir, clean and dirty storage tanks, pumps, and filters.

Steam Generator System

Coal is pulverized and fed into the boiler via hot air streams to produce the steam needed for energy production. Coal usage and steam production vary with energy demand. Fuel oil is used in the igniters to support starting and stopping of the coal pulverizing equipment and for flame stabilization during transients. Fuel oil is also used for start up steam production in a unit cold start.

APPENDIX C
DESCRIPTION OF PROCESS AND EQUIPMENT

Auxiliary steam is produced by the auxiliary boiler for unit cold starts or supplemental heating during unit outages. The auxiliary boiler uses fuel oil and is rated at 150,000 lbs of steam per hour at 150 psi.

Pollution Control Systems

The Bonanza Power Plant Unit 1 uses an Ecolaire baghouse and ABB wet scrubber along with the low NO_x burners for pollution control. The baghouse is a reverse gas design using reverse gas and sonic horns for bag cleaning. There are a total of 10,800 bags in the unit with an average differential pressure of 5.5 inches of water. The gas flow at full load through the baghouse and scrubber is approximately 1,380,000 SCFM.

The scrubber consists of three absorber modules. Typically, two modules are in service when the plant is operating with the third module in standby. Under low load conditions, only one module may be required. Each module uses three levels of counter flow slurry sprays to react with the flue gas. A perforated tray exists below the bottom spray header to increase flue gas contact, straighten flow, and for personnel safety while performing maintenance. Limestone is ground on site and mixed with water to form a slurry of approximately 15 to 35 percent solids. Slurry is added to the modules to maintain a percent solids of approximately 10 to 20. The modules' pH of the slurry ranges from approximately 5.0 to 6.5. Continuous emission monitoring is performed on the absorber inlet ducts and at the stack. Reference drawings are located in Appendix B and the description in Appendix G.

Water Supply System

Water is transported approximately 20 miles from the co-operatives' collector wells along the Green River. The system discharges through a hydro-generator into a raw water storage pond on site prior to treatment. The system has a design capability of transporting approximately 13,000 gpm.

Boiler feedwater must be extremely clean and demineralized prior to use. All water treatment is performed on site. Two stages of cleaning occur. The first stage is in the water treatment facility where boiler water goes through filtration and reverse osmosis. The second stage is in the turbine building where boiler water is then demineralized. The re-circulation of the plant's condensate is also polished to maintain strict compliance with boiler chemistry. Due to the remote location of the plant, the plant also produces potable water on site. All potable water systems are operated in accordance with State of Utah regulations.

The Bonanza Power Plant Unit 1 is a zero discharge facility. All process water is reused where possible and then discharged to evaporation ponds when exhausted. The waste water and storm water is collected and routed to the evaporation ponds where it is impounded and evaporated as well.

Refer to Appendix D for individual equipment's potential to emit. Refer to Appendix A and

B for site and unit drawings, respectively.

Appendix D

Description of All Potentials to Emit (PTE)

United States Environmental Protection Agency

OMB No. 2060-0336, Approval Expires 04/30/2012

Federal Operating Permit Program (40 CFR Part 71)

POTENTIAL TO EMIT (PTE)

For each unit with emissions that count towards applicability, list the emissions unit ID and the PTE for the air pollutants listed below and sum them up to show totals for the facility. You may find it helpful to complete form **EMISS** before completing this form. Show other pollutants not listed that are present in major amounts at the facility on attachment in a similar fashion. You may round values to the nearest tenth of a ton. Also report facility totals in section **J** of form **GIS**.

Emissions Unit ID	Regulated Air Pollutants and Pollutants for which the Source is Major (tons/yr)						
	NO_x	VOC	SO_2	PM10	CO	Lead	HAP
Main Boiler (Coal/Fuel Oil)	9225.0	70.2	2347.4	2372.5	501.9	0.95	67.7
Auxiliary Boiler (Fuel Oil)	0.60	UN	1.8	0.03	0.13	UN	0.0002
Emergency Diesel Generator (Fuel Oil)	0.62	UN	0.001	0.01	0.16	0.0002	0.0005
Emergency Diesel Fire Pump (Fuel Oil)	0.32	UN	0.02	0.02	0.07	0.00	0.0003
Construction Heaters (Propane)	1.5	UN	0.007	0.08	0.26	UN	UN
EXISTING FACILITY TOTALS	**9228.0**	**70.2**	**2347.4**	**2372.6**	**502.5**	**1.0**	**67.7**
Main Boiler* (Natural Gas)	2765.7	108.7	11.9	150.1	1659.4	0.01	1.7
Auxiliary Boiler** (Natural Gas)	0.48	0.02	0.002	0.03	0.29	0.00	0.0003

* Estimated PTE if the main boiler is converted to natural gas.
**Estimated PTE if the auxiliary boiler is converted to natural gas.

DESCRIPTION OF ALL POTENTIALS TO EMIT (PTE)

The Bonanza Power Plant Unit 1 is a major source for potential emissions of nitrogen oxides (NO_x), sulfur dioxide (SO_2), total particulates (PM), PM-10, volatile organic chemicals (VOC's), hazardous air pollutants (HAP's), and carbon monoxide (CO). Potential emissions of all other regulated pollutants are calculated to be less than the major source threshold definition.

Process data calculation sheets follow to summarize information used to calculate potential emissions. Potential to emit was based on approximately 99.5% of the coal burned with the pollution control equipment in service. In 2011, approximately 66% of the oil burned in the boiler was burned with the pollution control equipment in service.

Bonanza Power Plant Major Source Potential Emissions

NO_x (threshold 1 ton per year)

1. Main Boiler (coal/fuel oil)	9,225.0 TPY	Reference D-2, D-6
2. Main Boiler (natural gas)	2,765.7 TPY	Reference D-8
3. Construction Heaters (propane)	1.5 TPY	Reference D-18

SO_2 (threshold 1 ton per year)

1. Main Boiler (coal/fuel oil)	2,347.4 TPY	Reference D-2, D-6
2. Main Boiler (natural gas)	11.9 TPY	Reference D-8
3. Aux. Boiler (fuel oil)	1.8 TPY	Reference D-10

CO (threshold 1 ton per year)

1. Main Boiler (coal/fuel oil)	501.9 TPY	Reference D-2, D-6
2. Main Boiler (natural gas)	1,659.4 TPY	Reference D-8

PM10 (threshold 1 ton per year)

1. Main Boiler (coal/fuel oil)	2,372.5 TPY	Reference D-2, D-6
2. Main Boiler (natural gas)	150.1 TPY	Reference D-8

VOC's (threshold 1 ton per year)

1. Main Boiler (coal/fuel oil)	70.2 TPY	Reference D-2, D-6
2. Main Boiler (natural gas)	108.7 TPY	Reference D-8

HAPs (threshold 500 pounds per year)

1. Main Boiler (coal/fuel oil)	67.7 TPY	Reference D-2, D-3, D-6
2. Main Boiler (natural gas)	1.7 TPY	Reference D-8

DESERET GENERATION AND TRANSMISSION COOPERATIVE

PLANT: **Bonanza, Unit 1**
SOURCE ID: Main Boiler
FUEL: Bituminous Coal (p. 1 of 4)

PROCESS DATA

YEAR: 2012 SCC CODE	AVERAGE OUTPUT (MW) (est.)	AVERAGE HEAT INPUT (MMBTU/HR)	CALCULATED HEATRATE (Btu/kWh)	AVERAGE PROCESS RATE	SCC UNITS	AVERAGE RATE (SCC UNIT/HR)	SULFUR CONTENT (% BY WEIGHT)	ASH CONTENT (% BY WEIGHT)	FUEL HEAT CONTENT (MMBTU/SCC UNIT)
10100201	471	4,578	9,720	2,005,164	TON	229	1.0	9.0	20

ESTIMATED EMISSIONS

POLLUTANT	CONTROL EQUIPMENT PRIMARY	SECONDARY	CONTROL EFFICIENCY (%)	EMISSION FACTOR (LBS/SCC UNIT)	ASH/SULFUR FLAG	EMISSIONS ESTIMATION METHOD			POTENTIAL CONTROLLED EMISSIONS (TONS/YEAR)
CO			0.00	0.50		AP-42 Table 1.1-3			501.29
CO2			0.00	5,510		AP-42 Table 1.1-20			5,524,227
VOC			0.00	0.07		Section 1.1, Sup E AP-42			70.18
NOx	Low NOx Burners		0.00	Controlled 9.20		Emission Limit (0.46 lbs/mmBtu)			9,223.75
SO2	Scrubber		Calc on 2.0 #/mmBtu inlet 95.12	40.00	S	Emission Limit 0.0976 lbs/mmBTU			2,338.50
PM	Baghouse	Scrubber	(CALCULATED) 99.67	180.00	A	Emission Limit (0.0297 lbs/mmBtu)			2,394.23
PM10	Baghouse	Scrubber	(CALCULATED) 99.68	180.00	A	Emission Limit (0.0286lbs/mmBtu)			2,372.39
HCL	Scrubber		97.00	1.20		AP-42			36.09
HF	Scrubber		94.00	0.23		Coal Analysis (11/1998) lbs/ton			13.84
Lead	Baghouse	Scrubber	(AIR TOXICS) 95.00	(8.0E-04 #/mmBtu) 1.60E-02		Coal Analysis (11/1998) 8 PPM			9.54E-01
Arsenic	Scrubber	Baghouse	(AIR TOXICS) 94.30	(5.38E-04 #/mmBtu) 1.08E-02		WebFIRE 6.22			7.17E-01
Beryllium	Baghouse		(AIR TOXICS) 99.30	(8.1E-05 #/mmBtu) 1.62E-03		WebFIRE 6.22			2.75E-02
Cadmium	Baghouse		(STACK TEST) 99.80	(4.4E-05 #/mmBtu) 8.80E-04		WebFIRE 6.22			1.06E-02
Chromium	Scrubber	Baghouse	(AIR TOXICS) 71.50	(0.0007 #/mmBtu) 1.40E-02		Coal Analysis (11/1998) 7 PPM			4.10
Mercury	Scrubber		(AIR TOXICS) 25.00	(1.6E-05 #/mmBtu) 3.20E-04		WebFIRE 6.22			2.41E-01
Manganese	Baghouse		(AIR TOXICS) 78.50	(1.1E-03 #/mmBtu) 2.20E-02		Coal Analysis (11/1998) 11 PPM			4.92
Nickel	Scrubber		(AIR TOXICS) 72.70	(1.0E-04 #/mmBtu) 2.00E-03		Coal Analysis (11/1998) <1.0 PPM			5.62E-01
Selenium	Baghouse		(XATEF1) 92.00	(24.34 lbs/10^12 Btu) 4.87E-04		AIR TOXICS (for bitum coal)			4.35E-02
POM	Baghouse		Unknown; factor w/ control	(18.5 lbs/10^12 Btu) 3.70E-04		AIR TOXICS (for bitum coal)			3.71E-01
Formaldehyde	Baghouse		0.00	(2.4E-04 lb/ton) 2.40E-04		AP-42 Table 1.1-14			2.41E-01
Naphthalene	Baghouse		0.00	(1.3E-05 lb/ton) 1.30E-05		AP-42 Table 1.1-13			1.30E-02

DESERET GENERATION AND TRANSMISSION COOPERATIVE

PLANT: **Bonanza, Unit 1**
SOURCE ID: Main Boiler
FUEL: Bituminous Coal (p. 2 of 4)

PROCESS DATA

YEAR: 2012 SCC CODE	AVERAGE OUTPUT (MW) (est.)	AVERAGE HEAT INPUT (MMBTU/HR)	CALCULATED HEATRATE (Btu/kWh)	AVERAGE PROCESS RATE	SCC UNITS	AVERAGE RATE (SCC UNIT/HR)	SULFUR CONTENT (% BY WEIGHT)	ASH CONTENT (% BY WEIGHT)	FUEL HEAT CONTENT (MMBTU/SCC UNIT)
10100201	471	4,578	9,720	2,005,164	TON	229	1.0	9.0	20.00

ESTIMATED EMISSIONS

POLLUTANT	CONTROL EQUIPMENT PRIMARY	SECONDARY	CONTROL EFFICIENCY (%)	EMISSION FACTOR (LBS/SCC UNIT)	ASH/SULFUR FLAG	EMISSIONS ESTIMATION METHOD			POTENTIAL CONTROLLED EMISSIONS (TONS/YEAR)
Acetaldehyde			0.00	5.70E-04		AP-42 Table 1.1-14			5.71E-01
Acetophenone			0.00	1.50E-05		AP-42 Table 1.1-14			1.50E-02
Acrolein			0.00	2.90E-04		AP-42 Table 1.1-14			2.91E-01
Benzene			0.00	1.30E-03		AP-42 Table 1.1-14			1.30
Benzyl Chloride			0.00	7.00E-04		AP-42 Table 1.1-14			7.02E-01
Bromoform			0.00	3.90E-05		AP-42 Table 1.1-14			3.91E-02
Carbon Disulfide			0.00	1.30E-04		AP-42 Table 1.1-14			1.30E-01
2-Chloroacetophenone			0.00	7.00E-06		AP-42 Table 1.1-14			7.02E-03
Chlorobenzene			0.00	2.20E-05		AP-42 Table 1.1-14			2.21E-02
Chloroform			0.00	5.90E-05		AP-42 Table 1.1-14			5.92E-02
Cumene			0.00	5.30E-06		AP-42 Table 1.1-14			5.31E-03
2,4-Dinitrotoluene			0.00	2.80E-07		AP-42 Table 1.1-14			2.81E-04
Dimethyl sulfate			0.00	4.80E-05		AP-42 Table 1.1-14			4.81E-02
Ethyl Benzene			0.00	9.40E-05		AP-42 Table 1.1-14			9.42E-02
Formaldehyde			0.00	2.40E-04		AP-42 Table 1.1-14			2.41E-01
Hexane			0.00	6.70E-05		AP-42 Table 1.1-14			6.72E-02
Methyl Ethyl Ketone			0.00	3.90E-04		AP-42 Table 1.1-14			3.91E-01
Methyl Hydrazine			0.00	1.70E-04		AP-42 Table 1.1-14			1.70E-01
Methyl Methacrylate			0.00	2.00E-05		AP-42 Table 1.1-14			2.01E-02
Methyl tert butyl ether			0.00	3.50E-05		AP-42 Table 1.1-15			3.51E-02
Methylene Chloride			0.00	2.90E-04		AP-42 Table 1.1-14			2.91E-01
Phenol			0.00	1.60E-05		AP-42 Table 1.1-14			1.60E-02
Propionaldehyde			0.00	3.80E-04		AP-42 Table 1.1-14			3.81E-01
Tetrachloroethylene			0.00	4.30E-05		AP-42 Table 1.1-14			4.31E-02
Toluene			0.00	2.40E-04		AP-42 Table 1.1-14			2.41E-01
1,1,1- Trichloroethane			0.00	2.00E-05		AP-42 Table 1.1-14			2.01E-02
Styrene			0.00	2.50E-05		AP-42 Table 1.1-14			2.51E-02
Xylenes			0.00	3.70E-05		AP-42 Table 1.1-14			3.71E-02
Vinyl Acetate			0.00	7.60E-06		AP-42 Table 1.1-14			7.62E-03

DESERET GENERATION AND TRANSMISSION COOPERATIVE

PLANT: **Bonanza, Unit 1**
SOURCE ID: Main Boiler
FUEL: Bituminous Coal (p. 3 of 4)

PROCESS DATA

YEAR: 2012 SCC CODE	AVERAGE OUTPUT (MW)	AVERAGE HEAT INPUT (MMBTU/HR)	CALCULATED HEATRATE (Btu/kWh)	AVERAGE PROCESS RATE	SCC UNITS	AVERAGE RATE (SCC UNIT/HR)	SULFUR CONTENT (% BY WEIGHT)	ASH CONTENT (% BY WEIGHT)	FUEL HEAT CONTENT (MMBTU/SCC UNIT)
10100201	471	4,578	9,720	2,005,164	TON	229	1.000	9.00	20.00

ESTIMATED EMISSIONS

POLLUTANT	CONTROL EQUIPMENT PRIMARY	CONTROL EQUIPMENT SECONDARY	CONTROL EFFICIENCY (%)	EMISSION FACTOR (LBS/SCC UNIT)	ASH/SULFUR FLAG	EMISSIONS ESTIMATION METHOD			POTENTIAL CONTROLLED EMISSIONS (TONS/YEAR)
Total TCDD	Fabric Filter	FGD	Unknown;	3.93E-10		AP-42 Table 1.1-12			3.94E-07
Total PeCDD	Fabric Filter	FGD	Unknown;	7.06E-10		AP-42 Table 1.1-12			7.08E-07
Total HxCDD	Fabric Filter	FGD	Unknown;	3.00E-09		AP-42 Table 1.1-12			3.01E-06
Total HpCDD	Fabric Filter	FGD	Unknown;	1.00E-08		AP-42 Table 1.1-12			1.00E-05
Total OCDD	Fabric Filter	FGD	Unknown;	2.87E-08		AP-42 Table 1.1-12			2.88E-05
Total TCDF	Fabric Filter	FGD	Unknown;	2.49E-09		AP-42 Table 1.1-12			2.50E-06
Total PeCDF	Fabric Filter	FGD	Unknown;	4.84E-09		AP-42 Table 1.1-12			4.85E-06
Total HxCDF	Fabric Filter	FGD	Unknown;	1.27E-08		AP-42 Table 1.1-12			1.27E-05
Total HpCDF	Fabric Filter	FGD	Unknown;	4.39E-08		AP-42 Table 1.1-12			4.40E-05
Total OCDF	Fabric Filter	FGD	Unknown;	1.37E-07		AP-42 Table 1.1-12			1.37E-04
total PCDD/PCDF	Fabric Filter	FGD	Unknown;	2.44E-07		AP-42 Table 1.1-12			2.44E-04

*Or as noted for radionuclide emissions.

DESERET GENERATION AND TRANSMISSION COOPERATIVE

PLANT: **Bonanza, Unit 1**
SOURCE ID: Main Boiler
FUEL: Bituminous Coal (p. 4 of 4)

NOTES:

POTENTIAL CONTROLLED EMISSIONS

1) As referenced in the State of Utah Approval Order DAQE-186-98 dated March 16, 1998 and the PSD permit PSD-UO-0001-2001:00 dated February 2, 2001, potential emissions are calculated based on average heat input of about 4,578 mmBtu/hr and federally enforceable limits for SO2 of 0.0976 lbs/mmBtu and for PM10 of 0.0286 lbs/mmBtu. A design higher heating value of approximately 10,000 Btu/lb and an ash content of approximately 9% was used for the coal.
2) Potential SO2, PM, and PM10 emissions are based on average heat input and 99% controlled and 1% uncontrolled where applicable.
3) Potential NOx emissions based on a Part 76 limit of 0.46 lbs/MMBTU (40 CFR 76.7).
4) Potential SO2, PM, and PM10 emissions based on current permit limits of 0.0976 lbs/mmBtu and 0.0286lbs/mmBtu, respectively, under EPA approval order PSD-UO-0001-2001:00.
5) Potential emissions of all other criteria pollutants and HAPs based on emissions factors published in AP-42, AIRS, AIR TOXICS, and WebFIRE, as noted for each pollutant. Where a range of emissions factors was given in literature reviewed, the most conservative factor was generally used.
6) The average gross load of 471 MW is based on the average heat input from the PSD permit. The gross megawatt capability for the Bonanza Power Plant Unit 1 is estimated at 500 MW.

CONTROL EQUIPMENT AND ASSOCIATED EFFICIENCIES

7) Emissions control equipment consists of an baghouse, scrubber, and low-NOx burners.
8) Baghouse control efficiencies for PM and PM10 where calculated based on PSD limits.
9) Baghouse control efficiencies for metals were calculated based on comparing average uncontrolled and average baghouse controlled emissions data published in AIR TOXICS and WebFIRE. Where a range of emission factors was given in literature reviewed, the most conservative factors for emissions were used.
10) Control efficiencies for the remaining non-metals HAPs are unknown.
11) PTE for NOx was calculated on the permitted emission rate.

DESERET GENERATION AND TRANSMISSION COOPERATIVE

PLANT: **Bonanza, Unit 1**
SOURCE ID: Main Boiler
FUEL: No. 2 Fuel Oil (p. 1 of 2)

PROCESS DATA

YEAR: 2012 SCC CODE	MAXIMUM HEAT INPUT (MMBTU/HR)	MAXIMUM PROCESS RATE	SCC UNITS	MAXIMUM DESIGN RATE (SCC UNIT/HR)	SULFUR CONTENT (% BY WEIGHT)	FUEL DENSITY (LBS/GAL)	FUEL HEAT CONTENT (MMBTU/SCC UNIT)
10100501	538	250	KGALS	3.84	0.50	7.1	140

ESTIMATED EMISSIONS

POLLUTANT	CONTROL EQUIPMENT PRIMARY	CONTROL EQUIPMENT SECONDARY	OVERALL CONTROL EFFICIENCY (%)	EMISSION FACTOR (LBS/SCC UNIT)	ASH/SULFUR FLAG	ACTUAL EMISSIONS ESTIMATION METHOD			POTENTIAL CONTROLLED EMISSIONS (TONS/YEAR)
CO			0.00	5.0		AP-42 Table 1.3-1			6.25E-01
CO2			0.00	21,500		AP-42 Table 1.3-12			2688
VOC			0.00	0.2		Fire 10100501			2.50E-02
NOx			0.00	10.0		AP-42 Table 1.3-1			1.25
SO2			0.00	71.0	S	AP-42 Table 1.3-1			8.88
PM			0.00	2.0		AP-42 Table 1.3-1			2.50E-01
PM10			0.00	1.0		AP-42 Table 1.3-6			1.25E-01
Lead			0.00	(9.0 lbs/10^12 Btu) 0.000126		AP-42 Table 1.3.10			1.58E-05
Arsenic			0.00	(4.0 lbs/10^12 Btu) 0.00056		AP-42 Table 1.3.10			7.00E-05
Beryllium			0.00	(3.0 lbs/10^12 Btu) 0.00042		AP-42 Table 1.3.10			5.25E-05
Cadmium			0.00	(3.0 lbs/10^12 Btu) 0.00042		AP-42 Table 1.3.10			5.25E-05
Chromium			0.00	(3.0 lbs/10^12 Btu) 0.00042		AP-42 Table 1.3.10			5.25E-05
Mercury			0.00	(3.0 lbs/10^12 Btu) 0.00042		AP-42 Table 1.3.10			3.36E-05
Manganese			0.00	(6.0 lbs/10^12 Btu) 0.00084		AP-42 Table 1.3.10			1.05E-04
Nickel			0.00	(3.0 lbs/10^12 Btu) 0.00042		AP-42 Table 1.3.10			5.25E-05
POM			0.00	(.0033 lbs/kgal) 0.00330		AP-42 Table 1.3.8			4.13E-04
Formaldehyde			0.00	(0.0033 lbs/kgal) 4.90000		AP-42 Table 1.3.9			6.13E-01
Naphalene			0.00	(1.13E-3 lbs/kgal) 0.00047		AP-42 Table 1.3.9			5.83E-05
Selenium			0.00	(15 lbs/10^12 Btu) 0.00210		AP-42 Table 1.3.10			2.63E-04

DESERET GENERATION AND TRANSMISSION COOPERATIVE

PLANT: **Bonanza, Unit 1**
SOURCE ID: Main Boiler
FUEL: No. 2 Fuel Oil (p. 2 of 2)

NOTES:

2012

1) Potential PM emissions based on using an emissions factor published in AIRS.
2) Potential PM10 emissions calculated from the results for PM emissions and AP-42 Table 1.3-2 "Cumulative Particle Size Distribution and Size Specific Emission Factors for Utility Boilers Firing Residual Oil". This table was used as the best data available because there is no such table for distillate oil No. 2 firing.
3) Actual emissions of all other criteria pollutants and HAPs based on emissions factors published in AP-42.

POTENTIAL CONTROLLED EMISSIONS

4) All potential emissions are based on maximum heat input and limited hours of operation.
5) Potential SO2, NOx, PM and PM-10 emissions based AP-42, Table 1.3-1.
6) Potential emissions of all other criteria pollutants and HAPs based on emissions factors published in AP-42, Section 1.3.

CONTROL EQUIPMENT AND ASSOCIATED EFFICIENCIES

7) Emission factors used were without any control equipment or with unspecified control equipment.

DESERET GENERATION AND TRANSMISSION COOPERATIVE

PLANT: **Bonanza, Unit 1**
SOURCE ID: Main Boiler
FUEL: Natural Gas (p. 1 of 2)
rev. 1

PROCESS DATA

YEAR: 2012 SCC CODE	AVERAGE OUTPUT (MW) (est.)	AVERAGE HEAT INPUT (MMBTU/HR)	CALCULATED HEATRATE (Btu/kWh)	MAXIMUM PROCESS RATE	SCC UNITS	MAXIMUM DESIGN RATE (SCC UNIT/HR)	FUEL HEAT CONTENT (MMBTU/SCC UNIT)
10100501	471	4,578	9,720	39,511	mmCFT	4.51	1,015

ESTIMATED EMISSIONS

POLLUTANT	CONTROL EQUIPMENT PRIMARY	CONTROL EQUIPMENT SECONDARY	OVERALL CONTROL EFFICIENCY (%)	EMISSION FACTOR (LBS/SCC UNIT)	ASH/SULFUR FLAG	ACTUAL EMISSIONS ESTIMATION METHOD			POTENTIAL CONTROLLED EMISSIONS (TONS/YEAR)
CO			0.00	84		AP-42 Table 1.4-1			1,659.4
NOx			0.00	140		AP-42 Table 1.4-1			2,765.7
SO2			0.00	0.6	S	AP-42 Table 1.4-2			11.9
PM			0.00	7.6		AP-42 Table 1.4-2			150.1
PM10			0.00	7.6		AP-42 Table 1.4-2			150.1
Lead			0.00	5.00E-04		AP-42 Table 1.4-2			9.88E-03
VOC			0.00	5.5		AP-42 Table 1.4-2			108.65
CO2			0.00	120,000		AP-42 Table 1.4-2			2,370,637
Formaldehyde			0.00	7.50E-02		AP-42 Table 1.4-3			1.48
Naphthalene			0.00	6.10E-04		AP-42 Table 1.4-3			1.21E-02
Benzene			0.00	2.10E-03		AP-42 Table 1.4-3			4.15E-02
Hexane			0.00	1.8		AP-42 Table 1.4-3			35.56
Toluene			0.00	3.43E-03		AP-42 Table 1.4-3			6.78E-02
Arsenic			0.00	2.00E-04		AP-42 Table 1.4-4			3.95E-03
Beryllium			0.00	1.20E-05		AP-42 Table 1.4-4			2.37E-04
Cadmium			0.00	1.10E-03		AP-42 Table 1.4-4			2.17E-02
Chromium			0.00	1.40E-03		AP-42 Table 1.4-4			2.77E-02
Cobalt			0.00	8.40E-05		AP-42 Table 1.4-4			1.66E-03
Manganese			0.00	3.80E-04		AP-42 Table 1.4-4			7.51E-03
Mercury			0.00	2.60E-04		AP-42 Table 1.4-4			5.14E-03
Nickel			0.00	2.10E-03		AP-42 Table 1.4-4			4.15E-02
Selenium			0.00	2.40E-05		AP-42 Table 1.4-4			4.74E-04

DESERET GENERATION AND TRANSMISSION COOPERATIVE

PLANT: **Bonanza, Unit 1**
SOURCE ID: Main Boiler
FUEL: Natural Gas (p. 2 of 2)

NOTES:

POTENTIAL CONTROLLED EMISSIONS

1) All potential controlled emissions are based on average heat input.
2) Potential emissions of all other criteria pollutants based on emissions factors published in AP-42 (1.4 Natural Gas Combustion), as noted for each pollutant.

CONTROL EQUIPMENT AND ASSOCIATED EFFICIENCIES

3) Emission factors used were without any control equipment or with unspecified control equipment.

DESERET GENERATION AND TRANSMISSION COOPERATIVE

PLANT: **Bonanza, Unit 1**
SOURCE ID: AUXILIARY BOILER
FUEL: No. 2 Fuel Oil (p. 1 of 2)

PROCESS RATE

YEAR: 2012 SCC CODE	ESTIMATED AVERAGE HEAT INPUT (MMBTU/HR)	MAXIMUM PROCESS RATE	SCC UNITS	MAXIMUM DESIGN RATE (SCC UNIT/HR)	SULFUR CONTENT (% BY WEIGHT)	FUEL DENSITY (LBS/GAL)	FUEL HEAT CONTENT (MMBTU/SCC UNIT)
10200501	168	50	KGALS	1.20	0.5	7.1	140

ESTIMATED EMISSIONS

POLLUTANT	CONTROL EQUIPMENT PRIMARY	SECONDARY	OVERALL CONTROL EFFICIENCY (%)	EMISSION FACTOR (LBS/SCC UNIT)	ASH/SULFUR FLAG	ACTUAL EMISSIONS ESTIMATION METHOD			POTENTIAL EMISSIONS (TONS/YEAR)
CO			0.00	(5.0 lbs/ 10^3 gal) 5.0		WebFIRE			1.25E-01
CO2			0.00	21,500		AP-42 Table 1.3-12			537.5
TOC			0.00	(0.252 lb/10^3 gal) 0.252		WebFIRE			6.30E-03
NOx			0.00	(24.0 lb/10^3 gal) 24.0		WebFIRE			6.00E-01
SO2			0.00	(71.0 lb/10^3 gal) 71.0	S	AP-42 Table 1.3-1			1.78
PM			0.00	(2.0 lb/10^3 gal) 2.0		WebFIRE			5.00E-02
PM10			0.00	(1.0 lb/10^3 gal) 1.0		WebFIRE			2.50E-02
Lead			0.00	(9E-06 lbs/10^6 Btu) 1.26E-03		WebFIRE			3.15E-05
Arsenic			0.00	(4.0E-06 lbs/10^6 Btu) 5.60E-04		WebFIRE			1.40E-05
Beryllium			0.00	(3.0E-06 lbs/10^6 Btu) 4.20E-04		WebFIRE			1.05E-05
Cadmium			0.00	(3.0E-06 lbs/10^6 Btu) 4.20E-04		WebFIRE			1.05E-05
Chromium			0.00	(3.0E-06 lbs/10^6 Btu) 4.20E-04		WebFIRE			1.05E-05
Mercury			0.00	(3.0E-06 lbs/10^6 Btu) 4.20E-04		WebFIRE			1.05E-05
Manganese			0.00	(6.0E-06 lbs/10^6 Btu) 8.40E-04		WebFIRE			2.10E-05
Nickel			0.00	(3.0E-06 lbs/10^6 Btu) 4.20E-04		WebFIRE			1.05E-05
POM			0.00	(3.3E-03 lb/kgal) 3.30E-03		WebFIRE			8.25E-05
Selenium			0.00	(1.5E-05 lb/10^6 Btu) 2.10E-03		WebFIRE			5.25E-05

DESERET GENERATION AND TRANSMISSION COOPERATIVE

PLANT: **Bonanza, Unit 1**
SOURCE ID: AUXILIARY BOILER
FUEL: No. 2 Fuel Oil (p. 2 of 2)

NOTES:

POTENTIAL EMISSIONS

1) Since vendor information did not indicate heat input data, the average heat input to the boiler was estimated based on the boiler ratings for steam flow, pressure, and temperature. This is assuming a steam return temperature of 212 F and boiler efficiency of 85%.
2) All potential controlled emissions are based on average heat input (estimated to be 140 mmBtu/SCC UNIT) and limited hours of operation.
3) Potential emissions of all other criteria pollutants and HAPs based on emissions factors published in AP-42, Section 1.3 and WebFIRE.
4) SO2 Emissions are based on max sulfur in the fuel of 0.5%.

CONTROL EQUIPMENT AND ASSOCIATED EFFICIENCIES

5) There is no emissions control equipment on the auxiliary boiler.

DESERET GENERATION AND TRANSMISSION COOPERATIVE

PLANT: **Bonanza, Unit 1**
SOURCE ID: AUXILIARY BOILER
FUEL: Natural Gas (p. 1 of 2)

PROCESS RATE

YEAR: 2012	ESTIMATED AVERAGE HEAT INPUT (MMBTU/HR)	MAXIMUM PROCESS RATE	SCC UNITS	MAXIMUM DESIGN RATE (SCC UNIT/HR)	FUEL HEAT CONTENT (MMBTU/SCC UNIT)
SCC CODE					
10200602	168	6.90	mmCFT	0.17	1,015

ESTIMATED EMISSIONS

POLLUTANT	CONTROL EQUIPMENT PRIMARY	SECONDARY	OVERALL CONTROL EFFICIENCY (%)	EMISSION FACTOR (LBS/SCC UNIT)	ASH/SULFUR FLAG	ACTUAL EMISSIONS ESTIMATION METHOD			POTENTIAL EMISSIONS (TONS/YEAR)
CO			0.00	84		AP-42 Table 1.4-1			0.29
NOx			0.00	140		AP-42 Table 1.4-1			0.48
SO2			0.00	0.6	S	AP-42 Table 1.4-2			2.07E-03
PM			0.00	7.6		AP-42 Table 1.4-2			2.62E-02
PM10			0.00	7.6		AP-42 Table 1.4-2			2.62E-02
Lead			0.00	5.00E-04		AP-42 Table 1.4-2			1.72E-06
VOC			0.00	5.5		AP-42 Table 1.4-2			1.90E-02
CO2			0.00	120,000		AP-42 Table 1.4-2			414
Arsenic			0.00	2.00E-04		AP-42 Table 1.4.4			6.90E-07
Beryllium			0.00	1.20E-05		AP-42 Table 1.4.4			4.14E-08
Cadmium			0.00	1.10E-03		AP-42 Table 1.4.4			3.79E-06
Chromium			0.00	1.40E-03		AP-42 Table 1.4.4			4.83E-06
Mercury			0.00	2.60E-04		AP-42 Table 1.4.4			8.97E-07
Manganese			0.00	3.80E-04		AP-42 Table 1.4.4			1.31E-06
Nickel			0.00	2.10E-03		AP-42 Table 1.4.4			7.24E-06
TOC			0.00	11.0		AP-42 Table 1.4.2			3.79E-02
Benzene			0.00	2.10E-03		AP-42 Table 1.4.3			7.24E-06
Formaldehyde			0.00	7.50E-02		AP-42 Table 1.4.3			2.59E-04
Naphthalene			0.00	6.10E-04		AP-42 Table 1.4.3			2.10E-06
Selenium			0.00	2.40E-05		AP-42 Table 1.4.4			8.28E-08

DESERET GENERATION AND TRANSMISSION COOPERATIVE

PLANT: **Bonanza, Unit 1**
SOURCE ID: AUXILIARY BOILER
FUEL: Natural Gas (p. 2 of 2)

NOTES:

POTENTIAL EMISSIONS

1) All potential controlled emissions are based on average heat input and limited hours of operation.
2) Potential emissions of all criteria and HAPs pollutants are based on emissions factors published in AP-42 (1.4 Natural Gas Combustion), as noted for each pollutant.

CONTROL EQUIPMENT AND ASSOCIATED EFFICIENCIES

3) Emission factors used were without any control equipment.

DESERET GENERATION AND TRANSMISSION COOPERATIVE

PLANT: **Bonanza, Unit 1**
SOURCE ID: Emergency Diesel Generator
FUEL: No. 2 Fuel Oil (p. 1 of 2)

YEAR: 2012 SCC CODE	MAXIMUM DESIGN OUTPUT (kW)	CALCULATED MAXIMUM HEAT INPUT (MMBTU/HR)	ESTIMATED HEATRATE (Btu/kWh)	MAXIMUM ACTUAL PROCESS RATE	SCC UNITS	MAXIMUM DESIGN RATE (SCC UNIT/HR)	SULFUR CONTENT (% BY WEIGHT)	FUEL DENSITY (LBS/GAL)	FUEL HEAT CONTENT (MMBTU/SCC UNIT)
20200401	750	7.95	10,600	2.75	KGALS	0.05	0.50	7.1	140

ESTIMATED EMISSIONS

POLLUTANT	CONTROL EQUIPMENT PRIMARY	SECONDARY	OVERALL CONTROL EFFICIENCY (%)	EMISSION FACTOR (LBS/mmBtu)	ASH/SULFUR FLAG	ACTUAL EMISSIONS ESTIMATION METHOD			POTENTIAL EMISSIONS (TONS/YEAR)
CO			0.00	8.50E-01		AP-42 Table 3.4.1			1.64E-01
VOC			0.00	N/A		AP-42 Table 3.4.3			N/A
NOx			0.00	3.2		AP-42 Table 3.4.1			6.16E-01
SO2			0.00	5.05E-03		AP-42 Table 3.4.1			9.72E-04
PM			0.00	1.00E-01		AP-42 Table 3.4.2			1.93E-02
PM10			0.00	5.73E-02		AP-42 Table 3.4.2			1.10E-02
Lead			0.00	1.24E-03		AIR TOXICS/ ENGR JUDGMT			2.39E-04
CO2			0.00	165		AP-42 Table 3.4.4			2.27E-01
TOC			0.00	9.00E-02		AP-42 Table 3.4.1			1.73E-02
Benzene			0.00	7.76E-04		AP-42 Table 3.4.3			1.49E-04
Toluene			0.00	2.81E-04		AP-42 Table 3.4.3			5.41E-05
Xylene			0.00	1.93E-04		AP-42 Table 3.4.3			3.72E-05
Formaldehyde			0.00	7.89E-05		AP-42 Table 3.4.3			1.52E-05
Acetaldehyde			0.00	2.52E-05		AP-42 Table 3.4.3			4.85E-06
Acrolein			0.00	7.88E-06		AP-42 Table 3.4.3			1.52E-06
PAH			0.00	2.12E-04		AP-42 Table 3.4.4			4.08E-05

DESERET GENERATION AND TRANSMISSION COOPERATIVE

PLANT: **Bonanza, Unit 1**
SOURCE ID: Emergency Diesel Generator
FUEL: No. 2 Fuel Oil (p. 2 of 2)

NOTES:

POTENTIAL EMISSIONS

1) All potential controlled emissions are based on maximum heat input (estimated to be 140 mmBtu/SCC UNIT) and limited hours of operation.
2) Potential emissions of all other criteria pollutants and HAPs based on emissions factors published in AP-42, Section 3.4.

CONTROL EQUIPMENT AND ASSOCIATED EFFICIENCIES

3) The generator is an EPA Tier 2 Exhaust Emissions, Compliance Statement 750DQCB, 60 Hz Diesel Generator Set.

DESERET GENERATION AND TRANSMISSION COOPERATIVE

PLANT: **Bonanza, Unit 1**
SOURCE ID: Emergency Diesel Fire Pump
FUEL: No. 2 Fuel Oil (p. 1 of 2)

PROCESS DATA

YEAR: 2012 SCC CODE	CALCULATED MAXIMUM HEAT INPUT (MMBTU/HR)	ESTIMATED HEATRATE (Btu/kWh)	MAXIMUM PROCESS RATE	SCC UNITS	MAXIMUM DESIGN RATE (SCC UNIT/HR)	SULFUR CONTENT (% BY WEIGHT)	FUEL DENSITY (LBS/GAL)	FUEL HEAT CONTENT (MMBTU/SCC UNIT)
20200102	2.83	10,000	1.04	KGALS	0.02	0.50	7.1	140

ESTIMATED EMISSIONS

POLLUTANT	CONTROL EQUIPMENT PRIMARY	SECONDARY	OVERALL CONTROL EFFICIENCY (%)	EMISSION FACTOR LBS/SCC UNIT	ASH/SULFUR FLAG	ACTUAL EMISSIONS ESTIMATION METHOD			POTENTIAL CONTROLLED EMISSIONS (TONS/YEAR)
CO			0.00	(0.95 lb/mmBtu) 133		AP-42 Table 3.3.1			6.92E-02
VOC			0.00	N/A					N/A
NOx			0.00	(4.41 lb/mmBtu) 617.40		AP-42 Table 3.3.1			3.21E-01
SO2			0.00	(0.29 lb/mmBtu) 40.60		MASS BALANCE			2.11E-02
PM			0.00	(0.31 lb/mmBtu) 43.4		AP-42 Table 3.3.1			2.26E-02
PM10			0.00	(0.31 lb/mmBtu) 43.4		AP-42 Table 3.3.1			2.26E-02
Lead			0.00	8.90E-06		AIR TOXICS/ ENGR JUDGMT			4.63E-09
PAH			0.00	(1.68E-04 lb/mmBtu) 2.35E-02		AP-42 Table 3.3.2			1.22E-05
CO2			0.00	(164 lb/mmBtu) 22,960		AP-42 Table 3.3.1			11.94
TOC			0.00	(0.36 lb/mmBtu) 50.4		AP-42 Table 3.3.1			2.62E-02
Acetaldehyde			0.00	(7.67E-04 lb/mmBtu) 1.07E-01		AP-42 Table 3.3.2			5.58E-05
Acrolein			0.00	(9.25E-05 lb/mmBtu) 1.30E-02		AP-42 Table 3.3.2			6.73E-06
Benzene			0.00	(9.33E-04 lb/mmBtu) 1.31E-01		AP-42 Table 3.3.2			6.79E-05
Formaldehyde			0.00	(1.18E-03 lb/mmBtu) 1.65E-01		AP-42 Table 3.3.2			8.59E-05
Mercury			0.00	(3.014E-07 lb/mmBtu) 4.22E-05		WebFIRE 20200102			2.19E-08
Naphthalene			0.00	(8.48E-05 lb/mmBtu) 1.19E-02		AP-42 Table 3.3.2			6.17E-06
Toluene			0.00	(4.09E-04 lb/mmBtu) 5.73E-02		AP-42 Table 3.3.2			2.98E-05

DESERET GENERATION AND TRANSMISSION COOPERATIVE

PLANT: **Bonanza, Unit 1**
SOURCE ID: Emergency Diesel Fire Pump
FUEL: No. 2 Fuel Oil (p. 2 of 2)

NOTES:

POTENTIAL EMISSIONS

1) Emissions factors for all HAPs based on AP-42 and WebFIRE emissions data for large bore engines (greater than 600 hp), but were used as the best data available.
2) The amount of fuel oil burned by the diesel is estimated based on operating 0.5 hrs./wk.
3) Due to a lack of data, the maximum heat input to the diesel was estimated by assuming a full load heat rate of 10,000 Btu/kWh.
4) All potential emissions are based on maximum heat input (estimated to be 140 mmBtu/SCC UNIT) and limited hours of operation.

CONTROL EQUIPMENT AND ASSOCIATED EFFICIENCIES

5) There is no emissions control equipment on the diesel engine.

DESERET GENERATION AND TRANSMISSION COOPERATIVE

PLANT: **Bonanza, Unit 1**
SOURCE ID: Construction Heaters (4)
FUEL: Propane (p. 1 of 2)

PROCESS DATA

YEAR: 2012 SCC CODE	MAXIMUM HEAT INPUT (MMBTU/HR)	MAXIMUM PROCESS RATE	SCC UNITS	MAXIMUM DESIGN RATE (SCC UNIT/HR)	SULFUR CONTENT (GR/100 CFT)	FUEL DENSITY (LBS/GAL)	FUEL HEAT CONTENT (MMBTU/SCC UNIT)
10500110	12.81	150	KGALS	0.140	1.00	4.40	91.50

ESTMATED EMISSIONS

POLLUTANT	CONTROL EQUIPMENT PRIMARY	SECONDARY	OVERALL CONTROL EFFICIENCY (%)	EMISSION FACTOR (LBS/SCC UNIT)	ASH/SULFUR FLAG	ACTUAL EMISSIONS ESTIMATION METHOD			POTENTIAL CONTROLLED EMISSIONS (TONS/YEAR)
PM			0.00	1.126		WebFIRE 10500110			8.45E-02
PM10			0.00	1.126		WebFIRE 10500110			8.45E-02
SO2			0.00	9.00E-02		AP-42 1.5-1			6.75E-03
NOx			0.00	20		WebFIRE 10500110			1.50
CO2			0.00	12,500		AP-42 1.5-1			937.50
CO			0.00	3.4		WebFIRE 10500110			2.55E-01
TOC			0.00	5.50E-01		WebFIRE 10500110			4.13E-02

DESERET GENERATION AND TRANSMISSION COOPERATIVE

PLANT: **Bonanza, Unit 1**
SOURCE ID: Construction Heaters
FUEL: Propane (p. 2 of 2)

NOTES:

POTENTIAL EMISSIONS

1) Emissions of criteria pollutants based on emissions factors published in AP-42, WebFIRE, and engineering judgment, as noted for each pollutant.
2) All potential controlled emissions are based on maximum heat input and limited hours of operation.

CONTROL EQUIPMENT AND ASSOCIATED EFFICIENCIES

3) There is no emissions control equipment on the construction heaters.

Appendix E

List and Descriptions of Any Insignificant Emission Units

LIST AND DESCRIPTION OF ANY INSIGNIFICANT EMISSIONS UNITS

The following items have been identified as "insignificant" for the Bonanza Power Plant Unit 1 in accordance with the EPA "White Paper" dated July 10, 1995.

NO_x (threshold 1 ton per year)

1. Auxiliary Boiler (fuel oil)	0.60 TPY	Reference D-10
2. Aux. Boiler (natural gas)	0.48 TPY	Reference D-12
3. Emergency Generator (fuel oil)	0.62 TPY	Reference D-14
4. Emergency Fire Pump (fuel oil)	0.32 TPY	Reference D-16

SO_2 (threshold 1 ton per year)

1. Auxiliary Boiler (natural gas)	0.002 TPY	Reference D-12
2. Emergency Generator (fuel oil)	0.001 TPY	Reference D-14
3. Emergency Fire Pump (fuel oil)	0.02 TPY	Reference D-16
4. Construction Heaters (propane)	0.007 TPY	Reference D-18

CO (threshold 1 ton per year)

1. Auxiliary Boiler (fuel oil)	0.13 TPY	Reference D-10
2. Aux. Boiler (natural gas)	0.29 TPY	Reference D-12
3. Emergency Generator (fuel oil)	0.16 TPY	Reference D-14
4. Emergency Fire Pump (fuel oil)	0.07 TPY	Reference D-16
5. Construction Heaters (propane)	0.26 TPY	Reference D-18

PM10 (threshold 1 ton per year)

1. Auxiliary Boiler (fuel oil)	0.03 TPY	Reference D-10
2. Auxiliary Boiler (natural gas)	0.03 TPY	Reference D-12
3. Emergency Generator (fuel oil)	0.01 TPY	Reference D-14
4. Emergency Fire Pump (fuel oil)	0.02 TPY	Reference D-16
5. Construction Heaters-PM (propane)	0.08 TPY	Reference D-18

VOC (threshold 1 ton per year)

1. Auxiliary Boiler (fuel oil)	UN	Reference D-10
2. Auxiliary Boiler (natural gas)	0.02 TPY	Reference D-12
3. Emergency Generator (fuel oil)	UN	Reference D-14
4. Emergency Fire Pump (fuel oil)	UN	Reference D-16
5. Construction Heater (propane)	UN	Reference D-18

HAPs (threshold 500 pounds per year)

1. Auxiliary Boiler (fuel oil)	0.0002 TPY	Reference D-10
2. Auxiliary Boiler (natural gas)	0.0003 TPY	Reference D-12
3. Emergency Generator (fuel oil)	0.0005 TPY	Reference D-14
4. Emergency Fire Pump (fuel oil)	0.0003 TPY	Reference D-16
5. Construction Heater (propane)	UN	Reference D-18

Appendix F

List of All Air Pollution Control Equipment

LIST OF ALL AIR POLLUTION CONTROL EQUIPMENT

The Bonanza Unit 1 was built with the idea that all pollution sources should be minimized. The emissions from the boiler have been reduced through the use of low NO_x burners, a baghouse, and a wet limestone scrubber.

Low NO_x burners were installed by Foster-Wheeler during the initial design and construction of the boiler. In 1997 and 2000 a new generation of low NO_x burners, designed by Advanced Burner Technologies, were installed to help the unit meet its Phase 2 early election limits. The low NO_x burners work on the principal that a cooler flame combusts less of the nitrogen in the coal, therefore creating less NO_x.

The flyash and other particulates created by the coal combustion are removed by a fabric filter baghouse. The baghouse was designed and built by Ecolaire Inc. The baghouse consists of two separate sections with 12 compartments each. Each compartment has 450 bags for a total of 10,800 bags. The ducting in the baghouse allows for the use of any combination of compartments to be used at any time. Under normal circumstances, all compartments are in use except during compartment maintenance. The baghouse is over 99% efficient.

The SO_2 created by the combustion process is removed by a wet limestone scrubbing system. The scrubber system was designed and built by Combustion Engineering. The scrubber system consists of three modules, two of which are used at any one time and one is used as a spare. As the flue gas passes through the modules, it travels through a perforated tray and then three levels of a limestone slurry spray. The SO_2 is removed through the contact on the tray and the spraying process. The pH of the solution is controlled by the limestone. On occasion, scrubber enhancers such as adipic acid are added to the slurry to aid in the removal process. The solids that are formed by this process are removed by a sludge handling system, mixed with flyash, and conveyed or trucked to an onsite ash/sludge pile. The scrubber system removes greater than 90% of the SO_2 contained in the flue gas.

Appendix G

List and Descriptions of All Compliance Monitoring Equipment and EPA Test Methods Used

LIST AND DESCRIPTIONS OF ALL COMPLIANCE MONITORING EQUIPMENT AND EPA TEST METHODS USED

Bonanza Power Plant Unit 1 is in compliance with all known monitoring and reporting requirements which are contained within federal statutes for all Title V emission sources listed in this application. Deseret Generation and Transmission Cooperative will continue to maintain a full compliance status with all applicable monitoring and reporting requirements which affect these Title V emission sources. The following paragraphs contain a summary of all the monitoring done at Unit 1 to comply with the monitoring requirements.

Bonanza Power Plant Unit 1 currently has a continuous emissions monitoring system (CEMS) for monitoring compliance of the Unit 1 boiler emissions. The parameters monitored include SO_2, NO_x, CO_2, flow, and opacity. The monitoring is required under the provisions of the New Source Performance Standards (NSPS) contained in 40 CFR Part 60 Subpart Da (Part 60), 40 CFR Part 75 (Part 75).

NO_x is monitored for pounds per million Btu (lbs/mmBtu) for a 30-day rolling average for NSPS and an annual average for 40 CFR Part 76. Sulfur dioxide is monitored for pounds per million Btu for a 30-day rolling average and percent removal for a 30-day rolling average for NSPS. Sulfur dioxide is also monitored for pounds per hour for quarterly and annual total tons emitted under Part 75. Carbon dioxide is monitored as a diluent for SO_2 and NO_x for NSPS and Part 75. Carbon dioxide is also monitored for pounds per hour for quarterly and annual totals tons of CO_2 emitted for Part 75. Opacity is monitored to assure compliance with the opacity and particulate emission standards for NSPS. Flow is monitored for use in the pounds per hour calculations of SO_2 and CO_2 for part 75.

Current specific CEMS monitoring and reporting requirements for NO_x are contained in 40 CFR Part 60 Sections 60.47a, 60.48a, 60.49a, Appendix A, Appendix B, Appendix F; 40 CFR Part 75 Subparts A, B, C, D, F, G and Appendices A, B, C, F and H.

Sulfur dioxide monitoring and reporting requirements are contained in 40 CFR Part 60 Sections 60.47a, 60.48a and 60.49a; 40 CFR Part 75 Subparts A, B, C, F, G and Appendices A, B, C, F, and H.

Carbon dioxide monitoring and reporting requirements are contained in 40 CFR part 75 Subparts A, B, C, D, F, G and Appendices A, B, C, F, and H.

Opacity monitoring and reporting requirements are contained in 40 CFR Part 60 Sections 60.42a, 60.48a, 60.49a, Appendix A and Appendix B; 40CFR Part 75 Subparts A, B, C, F, G and Appendices A, B, and H.

Flow monitoring requirements are contained in 40 CFR Part 75 Subparts A, B, C, D, F, G and Appendices A, B, C, and F.

APPENDIX G
LIST AND DESCRIPTIONS OF ALL COMPLIANCE MONITORING EQUIPMENT AND EPA TEST METHODS USED

The CEMS monitors the gaseous pollutants from the 330 foot level of the stack and the inlet ducts to the scrubber. Opacity is measured from the two ducts between the baghouse and ID fans. The opacity monitors are located on the duct work because the stack is a wet stack. Data from the two opacity monitors are averaged and a stack exit opacity is calculated. Inlet monitoring or coal analysis may be used to calculate inlet SO_2 pounds per million Btu for removal calculation purposes. Coal sampling and analysis is done according to the applicable ASTM methods and 40 CFR 60 method 19 calculations.

The gaseous monitoring is accomplished by the use of an extractive dilution system in the main stack. The dilution probe is located at the 330 foot level of the stack and inlet ducts to the scrubber. The sample is taken by heated sample lines to the sixth floor of the scrubber where the analyzer and computer shelter is located. The data from the analyzers is sent to the data handling and acquisition system where it is stored and used to generate reports to the Federal EPA (40 CFR Part 75).

The CEMS is operated in compliance with all federal, manufacturers, and company regulations and policies. All the maintenance logs, maintenance procedures, and quality assurance procedures that are required by these regulations and documents are strictly followed.

No other "continuous" monitoring activities related to any Title V listed source in the application are currently required. It is anticipated that no other "continuous" emissions monitoring related to Title V listed sources will be required.

All known record keeping and reporting requirements contained in 40 CFR 60, 40 CFR 75 are being met.

The ambient monitoring and record keeping requirements contained in 40 CFR 51, 40 CFR 53 have been satisfied and no further monitoring of ambient air quality is needed for Unit 1.

Deseret Generation and Transmission cooperative operates a Spectrum continuous emissions monitoring system (CEMS) to determine the continuous compliance with all applicable stack emissions regulations. This system measures SO_2, NO_x, CO_2, flow, and opacity.

Sulfur Dioxide is monitored for pounds per million Btu (lbs/mmBtu), pounds per hour and percent removal. NO_x is monitored for lbs/mmBtu. Flow is monitored for standard cubic feet per hour (SCFH). Carbon dioxide is monitored for pounds per hour and opacity is measured in percent.

The CEM system consists of a three TECO 410i CO_2 analyzers, three TECO 43i SO_2 analyzers, one TECO 42i NO_x analyzer, two Teledyne 560 opacity monitors, and one Model 100 ultrasonic flow analyzer. Two Spectrapack PLC's control the system and collect data. A Dell 466 computer handles the data compilation and reporting.

APPENDIX G
LIST AND DESCRIPTIONS OF ALL COMPLIANCE MONITORING EQUIPMENT AND EPA TEST METHODS USED

The CEMS is operated in compliance with all federal, manufacturers, and company regulations and policies. All the maintenance logs, maintenance procedures, and quality assurance procedures that are required by these regulations and documents are strictly followed.

EPA test methods from 40 CFR Appendix A are used to determine the relative accuracy of the analyzers and computer systems. These tests are run on an annual or semiannual basis. Quarterly linearity checks and cylinder gas audits are performed on the gaseous analyzers and quarterly opacity filter audits are performed on the opacity monitors. Daily calibration gas checks are also performed on the gaseous monitors and a daily interference check is run on the flow monitor. EPA test methods 1-5, 19, and 201 are required annually to determine the compliance with particulate limits for Unit 1.

Opacity monitoring and reporting requirements are contained in 40 CFR Part 60 Sections 60.42a, 60.48a, 60.49a, Appendix A, and Appendix B; 40CFR Part 75 Subparts A, B, C, F, G, and Appendices A, B and H.

Flow monitoring requirements are contained in 40 CFR Part 75 Subparts A, B, C, D, F, G, and Appendices A, B, C, and F.

Initial testing shows that the Bonanza Power Plant Unit 1 will be considered a low emitting unit for all 40 CFR Part 63 HAPS emissions. As a low emitting unit, the Bonanza Power Plant Unit 1 will have no Part 63 monitoring requirements.

No other compliance monitoring is currently required.

Appendix H

List and Description of All Applicable Requirements

TABLE H-1

LIST OF FEDERAL AIR QUALITY REQUIREMENTS WHICH ARE APPLICABLE TO THE BONANZA POWER PLANT UNIT 1

1. Periodic reporting of emissions is required. The Bonanza Power Plant Unit 1 will submit the following in meeting this requirement:
   A. Quarterly excess emissions and monitoring systems performance report pursuant to 40 CFR 60.7(c), 40 CFR 60.49(a), 40 CFR 75.64, and 75.65.
   B. Annual emission inventory reports pursuant to for the following pollutants:
      1. SO_2
      2. NO_x
      3. PM_{10}
      4. VOC
      5. H_2SO_4
      6. HAP's
      7. Lead

2. Emission testing is required of all sources at least once every year. This requirement is met by compliance with the annual RATA requirement of 40 CFR 60 Appendix F 5.1, 40 CFR 75 Appendix B 2.3.1, and PSD-UO-0001-2001. These citations specify the particular tests, locations, and test methods that must be employed in meeting these testing requirements.

3. Pursuant to PSD-UO-0001-2001, sulfur emissions as SO_2 at the Bonanza Power Plant Unit 1 are not to exceed 0.0976 lbs/mmBtu heat input over a rolling 12-month average. Compliance shall be based upon CEM data and fuel heat input. Compliance shall be determined by calculating the rolling 12-month average. On the first day of each month, a new 12-month average shall be calculated using data from the previous 12-months.

4. Pursuant to PSD-UO-0001-2001, the Bonanza Power Plant Unit 1 shall achieve at least 90% SO_2 removal efficiency based on a 30-day rolling average.

5. Pursuant to PSD-UO-0001-2001, the Bonanza Power Plant Unit 1 shall not exceed SO_2 emissions of 0.15 lbs/mmBtu heat input averaged over 30 successive boiler operating days.

6. Bonanza Power Plant Unit 1 shall not discharge NO_x to the atmosphere at a rate exceeding 0.55 lbs/mmBtu heat input on a 30-day rolling average value averaged over 30 successive boiler operating days. Compliance shall be based on CEMS data and fuel heat input. (40 CFR 60.44(a) and PSD-UO-0001-2001) Pursuant to 40 CFR 76.8(a) and (b), the Bonanza Power Plant Unit 1 (a Phase II unit with a group l

boiler, wet bottom, wall fired boiler) has a NO_x emission of 0.46 lbs/mmBtu on an annual basis (40 CFR 76.5(a)(2)).

7. Bonanza Power Plant Unit 1 shall not discharge to the atmosphere particulate matter at a rate exceeding 0.03 lbs/mmBtu heat input as determined by 40 CFR 60 Appendix A, Methods 1-5, 19, and 202 (40 CFR 60.42a(a)(1)). Also, PM emissions shall not exceed 0.0297 lbs/mmBtu according to PSD-UO-0001-2001.

8. Bonanza Power Plant Unit 1 shall not discharge to the atmosphere PM_{10} particulate matter at a rate exceeding 0.03 lbs/mmBtu heat input as determined by 40 CFR 60 Appendix A, Methods 1-5, 19, and 202 (40 CFR 60.42a(a)(1)). Also, PM_{10} emissions shall not exceed 0.0286 lbs/mmBtu according to PSD-UO-0001-2001.

9. Visible emissions from any source shall not exceed 20% opacity. Stack emissions are determined by continuous opacity monitoring equipment. Stack exit opacities cannot exceed 20%, except for one six-minute period per hour of not more than 27%. EPA Method 9 (40 CFR 60 Appendix A) may be used when the opacity CEM equipment is not operating.

10. Coal dust collectors 1 through 5, limestone dust collectors 1 and 2, and the fly ash silo dust collector shall be maintained and operated per manufacturer's recommendations. The collected dust which is returned to the conveyors shall have surfactant sprays in place. The surfactant sprays shall be used during dumping when conveying conditions warrant. Conditions which warrant operation of the sprays are defined as anytime the 20% opacity limit is in jeopardy of being violated. (40 CFR 60.42a(b))

11. Pursuant to PSD-UO-0001-2001, the track hopper for bottom dump coal cars shall have surfactant sprays in place. The surfactant spray shall be used during dumping when conditions warrant. Conditions which warrant operation of the sprays are defined as anytime the 20% opacity limitation (40 CFR 60.42a(b)) is in jeopardy of being violated. The equipment shall be tested at least once per month to ensure that the sprays are always operative, except when weather conditions prohibit. A log of testing and operation shall be kept. The log shall include:
    A. Times of testing.
    B. Times of coal deliveries.
    C. Times of spray operation.
    D. Weather conditions at time of coal deliveries.
    E. Coal conditions (washed, unwashed, dry, moist, etc.).

12. Pursuant to PSD-UO-0001-2001, the coal pile shall not exceed 22 acres in total area. The active reclaim area shall not exceed 11 acres at any one time. The reclaim area

may be moved to any location on the coal pile. The remainder of the coal pile shall be the long-term storage area. Emissions of particulate from the long-term storage area shall be controlled by compaction of the coal pile surface and sealing with a surfactant initially and by subsequent application of sealing agent as warranted. A surfactant and spray mechanism to apply it shall be available and operative at all times. Conditions which warrant application of the surfactant are defined as any time the 20% opacity limitation (40 CFR 60.42a(b)) is in jeopardy of being violated. To insure that the sprays are always operative, the equipment shall be tested at least once per month. A log of testing and operation shall be kept. The log shall include:

A. Times of testing.
B. Times of spray operation.
C. Compaction operation.
D. Weather conditions.
E. Surface conditions (dry, crumbled, moist, etc.).

13. The owner/operator shall install, calibrate, maintain, and operate a continuous emissions monitoring system (CEMS). The owner/operator shall record the output of the system for measuring opacity, SO_2, and NO_x. Procedures to be followed for (1) testing, monitoring, and reporting of excess emissions of opacity, SO_2 and NO_x, and for (2) the purpose of demonstrating compliance with the emission limitations are located in the applicable sections of 40 CFR 60.7, 60.8, 60.11, 60.13, Subpart Da, Appendix A, Methods 1-7, Appendix B, Performance Specifications 1, 2, and 3. These sections shall apply only to the extent they are specifically set forth in this Table H-1 of the Title V Permit Application for the Bonanza Power Plant Unit 1.

14. A quality control/assurance plan/manual for the continuous monitoring system shall be developed and implemented. As a minimum, the quality control program shall have written procedures for each of the following activities pursuant to 40 CFR 60 Appendix F, 40 CFR 75 Appendix B.

A. Installation of CEMS.
B. Calibration of CEMS.
C. Zero and calibration checks and adjustments for CEMS.
D. Preventive maintenance for CEMS (including parts inventory).
E. Data recording and reporting.
F. Program of corrective action for inoperable CEMS.
G. Annual evaluation of CEMS.

TABLE H-2

REVIEW OF FEDERAL REGULATIONS WHICH MAY APPLY TO THE BONANZA POWER PLANT UNIT 1

40 CFR Part 50 -National Primary and Secondary Ambient Air Quality Standards

National primary and secondary ambient air quality standards are set forth in this part. Part 50 does not contain requirements for stationary sources. This part applies to regulatory authorities therefore the requirements of this section "do not apply" to the Bonanza Power Plant Unit 1.

40 CFR Part 51 - Requirements for Preparation, Adoption, and Submittal of Implementation Plans

This part sets forth requirements for preparation, adoption, and submittal of implementation plans. Part 51 contains administrative requirements that regulatory agencies must follow. This part applies to regulatory authorities and "does not apply" to the Bonanza Power Plant Unit 1.

40 CFR Part 52 - Approval and Promulgation of Implementation Plans

This part sets forth the Administrator's approval and disapproval of State plans and the Administrator's promulgation of such plans or portions thereof. Part 52 contains administrative requirements that regulatory agencies must follow. The regulations contained in this section "do not apply" to the Bonanza Power Plant Unit 1 with the exception of the Prevention of Significant Deterioration program requirements of 40 CFR 52.21 which are contained in paragraphs 4 through 12 of table H-1.

40 CFR Part 53 - Ambient Air Monitoring Reference and Equivalent Methods

These requirements are for ambient air monitor manufacturing and certification. The requirements of this part "do not apply" to the Bonanza Power Plant Unit 1.

40 CFR Part 54 - Prior Notice of Citizen Suits

Section 304 of the Clean Air Act authorizes the commencement of civil actions to enforce the Act or to enforce certain requirements promulgated pursuant to the Act. This part prescribes the procedures governing the giving of notices required by subsection 304(b) of the Act as a prerequisite to the commencement of such actions. The requirements of this part "do not apply" to the Bonanza Power Plant Unit 1.

APPENDIX H

LIST AND DESCRIPTION OF ALL APPLICABLE REQUIREMENTS

40 CFR Part 55 - Outer Continental Shelf Air Regulations

This part applies to all sources located on the outer continental shelf. The Bonanza Power Plant Unit 1 is not an outer continental shelf source; therefore the requirements of this part "do not apply".

40 CFR Part 56 - Regional Consistency

The purpose of this part is to assure that fair and uniform application of policies and procedures is employed in implementing and enforcing the Clean Air Act. This part applies to regulatory agencies and the requirements "do not apply" to the Bonanza Power Plant Unit 1.

40 CFR Part 57 - Primary Nonferrous Smelter Orders

This source is not a nonferrous smelter. The requirements of this part "do not apply" to the Bonanza Power Plant Unit 1.

40 CFR Part 58 - Ambient Air Quality Surveillance

This part contains criteria and requirements for ambient air quality monitoring and requirements for reporting air quality data and information. This part applies to State or local agencies operating a monitoring network. It also applies to owners or operators of proposed sources required to monitor ambient air quality. The requirements of this part "do not apply" to the Bonanza Power Plant Unit 1. PSD-UO-0001-2001 does not contain requirements requiring ambient air quality monitoring.

40 CFR Part 59 - National Volatile Organic Compound Emission Standards for Consumer and Commercial Products

This part applies to the coating industry. The requirements of this part "do not apply" to the Bonanza Power Plant Unit 1.

40 CFR Part 60 - Standards of Performance for New Stationary Sources (NSPS)

This part applies to the owner or operator of any stationary source which contains an affected facility for which the construction or modification is commenced after the date of publication in this part of any standard (or, if earlier, the date of publication of any proposed standard) applicable to that facility. Only the requirements of Subpart Da specifically set forth in paragraphs 3 through 12 and 23 through 25 of Table H-1 and Subpart Y are applicable. The requirements of all other subparts of this part "do not apply" to the Bonanza Power Plant Unit 1. The requirements contained in previous approval orders issued by the Utah DAQ and PSD permits issued by EPA which have been superseded by the approval order PSD-UO-0001-2001 are not applicable. These approval orders and permits include those issued April 29, 1981; July 11, 1984; July 2, 1987; June 14, 1995; and March 16, 1998.

APPENDIX H

LIST AND DESCRIPTION OF ALL APPLICABLE REQUIREMENTS

40 CFR Part 61 - National Emission Standards for Hazardous Air Pollutants (NESHAP)

This part applies to the owner or operator of any stationary source for which a standard is prescribed under this part. Specific requirements were reviewed during the recent "NOI" process which resulted in a modified approval order dated June 14, 1995 and a determination was made that the requirements of this part "do not apply" to the Bonanza Power Plant Unit 1.

40 CFR Part 62 - Approval and Promulgation of State Plans for Designated Facilities and Pollutants

This part sets forth the Administrator's approval and disapproval of State plans for control of designated pollutants and facilities. The requirements of this part "do not apply" to the Bonanza Power Plant Unit 1.

40 CFR Part 63 - National Emission Standards for Hazardous Air Pollutants for Source Categories

This part contains regulations governing compliance extensions for early reductions of hazardous air pollutants and MACT standards for specific source categories. A recently promulgated EPA rule regulating hazardous air pollutants from electric utility generating units will apply to the Bonanza Power Plant Unit 1. The requirements of this part "do not apply" to the Bonanza Power Plant Unit 1. The Title V permit application will be updated to reflect the effect of Subpart UUUUU of this regulation prior to the date upon which that Subpart will become applicable to the Bonanza Power Plant Unit 1.

40 CFR Part 64 – Compliance Assurance Monitoring

Part 64 contains regulations governing compliance monitoring for certain emission sources. This part "does not apply" to the Bonanza Power Plant Unit 1 because it is exempted from this Part under Section 64.2 (b)(iii) and 64.2 (b)(vi). The plant is regulated by continuous emissions monitoring provisions of the EPA approval Order PSD-OU-001-2001: 00, 40 CFR 60, Subpart Da, and 40 CFR 75.

40 CFR Part 65 - Delayed Compliance Orders

Section 113(d) of the Clean Air Act authorizes the Administrator to issue to certain sources delayed compliance orders permitting a delay in compliance with applicable regulations contained in a state implementation plan. This part sets forth the procedures for issuing such orders. The requirements of this part "do not apply" to the Bonanza Power Plant Unit 1.

40 CFR Part 66 - Assessment and Collection of Noncompliance Penalties by EPA

This part sets forth the procedures by which EPA will administer the noncompliance penalty provisions of Section 120 of the Clean Air Act. Duties of the source owner or operator

upon receipt of a notice of noncompliance penalties are also described. This part sets forth administrative requirements and does not contain any requirements applicable to the Bonanza Power Plant Unit 1. The requirements of this part "do not apply" to the Bonanza Power Plant Unit 1.

40 CFR Part 67 - EPA Approval of State Noncompliance Penalty Program

This part describes the standards and procedures under which EPA will approve State programs for administering the noncompliance penalty program under Section 120 of the Clean Air Act and will evaluate actions taken by states with approved programs. The requirements of this part "do not apply" to the Bonanza Power Plant Unit 1, although the administrative requirements may apply to EPA in dealing with non-compliance at the plant.

40 CFR Part 68 - Chemical Accident Prevention Provisions

This part sets forth the list of regulated substances and thresholds, the petition process for adding or deleting substances to the list of regulated substances, the requirements for owners or operators of stationary sources concerning the prevention of accidental releases, and the State accidental release prevention programs approved under section 112(r). The requirements of this part "do not apply" to the Bonanza Power Plant Unit 1.

40 CFR Part 69 - Special Exemptions from Requirements of the Clean Air Act

This part lists special exemptions from requirements of the Clean Air Act. This source has no such exemptions, therefore this part "does not apply" to the Bonanza Power Plant Unit 1.

40 CFR Part 70 - State Operating Permit Programs

This part defines the minimum elements required by the Act for State operating permit programs and the corresponding standards and procedures by which the Administrator will approve, oversee, and withdraw approval of State operating permit programs. This part “does not” contain requirements which are applicable to the Bonanza Power Plant Unit 1.

40 CFR Part 71 - Federal Operating Permit Programs

This part contains elements of an operating permit program administered by the EPA Administrator. The federal operating permit program for “Indian Country” is approved and “does apply” to the Bonanza Power Plant Unit 1.

40 CFR Part 72 - Permits Regulation

The purpose of this part is to establish certain general provisions and the operating permit program requirements for affected sources and affected units under the Acid Rain Program. This part “does apply” to the Bonanza Power Plant Unit 1.

40 CFR Part 73 - Sulfur Dioxide Allowance System

The purpose of this part is to establish the requirements and procedures for SO_2 allowances

including allocation, tracking, holding, transfers, deductions, and sales. Only Subparts A through E of this part apply to the Bonanza Power Plant Unit 1.

40 CFR Part 74 - Sulfur Dioxide Opt-ins

The purpose of this part is to establish the requirements and procedures for the election of a combustion or process source that emits sulfur dioxide to become an affected unit under the Acid Rain Program. Since the Bonanza Power Plant Unit 1 is subject to Part 72 and 73, it is not subject to Part 74.

40 CFR Part 75 - Continuous Emission Monitoring

The provisions of this part are applicable to each affected unit subject to acid rain emission limitations or reduction requirements for SO_2 and NO_x. Unless the requirements are listed in paragraphs 23, 24, and 25 of Table H-1 of this permit application, the requirements of this part are "not applicable" to the Bonanza Power Plant Unit 1.

40 CFR Part 76 - Acid Rain Nitrogen Oxides Emission Reduction Program

This part was promulgated in order to reduce the emission of NO_x from coal fired power plants. In 1995, the Bonanza Power Plant Unit 1 decided to opt-in under the early election provisions under this part. The Bonanza Power Plant Unit 1 is still covered under the emission limits contained in Part 76.7. Only Section 76.7 of this part “does apply” to the Bonanza Power Plant Unit 1.

40 CFR Part 77 - Excess Emissions

This part sets forth the excess emissions offset planning and offset penalty requirements under section 411 of the Clean Air Act. These requirements shall apply to the owners and operators and, to the extent applicable, the designated representative of each affected unit and affected source under the Acid Rain Program. This part would only apply to the Bonanza Power Plant Unit 1 in the event of excess emissions.

40 CFR Part 78 - Appeal Procedures

This part governs the appeals of any final decision of the Administrator under the parts listed in this rule. This part would only apply to the Bonanza Power Plant Unit 1 in the event of an appeal.

40 CFR Part 79 - Registration of Fuels and Fuel Additives

The regulations of this part apply to the registration of fuels and fuel additives. This source does not manufacture fuels. Therefore, the requirements of this part "do not apply" to the Bonanza Power Plant Unit 1.

40 CFR Part 80 - Regulation of Fuels and Fuel Additives

This part prescribes regulations for the control and/or prohibition of fuels and additives for

use in motor vehicles and motor vehicle engines. Therefore, the requirements of this part "do not apply" to the Bonanza Power Plant Unit 1.

40 CFR Part 81 - Designation of Areas for Air Quality Planning Purposes

Air quality control region designations, attainment status designations, and mandatory Class I federal areas where visibility is an important value are listed in this part. The Bonanza Power Plant Unit 1 is not located in any area so designated. Therefore, the requirements of this part "are not applicable" to the Bonanza Power Plant Unit 1.

40 CFR Part 82 - Protection of Stratospheric Ozone

Subpart F of this part contains requirements applicable to the Bonanza Power Plant Unit 1. The requirements of the other subparts "do not apply" to the Bonanza Power Plant Unit 1.

40 CFR Part 85 - Control of Air Pollution from Motor Vehicles and Motor Vehicle Engines

This part is not applicable to stationary sources and therefore "does not apply" to the Bonanza Power Plant Unit 1.

40 CFR Part 86 - Control of Air Pollution from New and In-Use Motor Vehicle and New and In-Use Motor Vehicle Engines: Certification and Test Procedures

This part is not applicable to stationary sources and therefore "does not apply" to the Bonanza Power Plant Unit 1.

40 CFR Part 87- Control of Air Pollution from Aircraft and Aircraft Engines

This part is not applicable to stationary sources and therefore "does not apply" to the Bonanza Power Plant Unit 1.

40 CFR Part 88 - Clean Fuel Vehicles

This part is not applicable to stationary sources and therefore "does not apply" to the Bonanza Power Plant Unit 1.

40 CFR Part 89 - Control of Emissions from New and In-use Nonroad Compression-Ignition Engines

This part applies to the manufacture of all compression-ignition non-road engines except those specified in the part. The requirements of this part "are not applicable" to the Bonanza Power Plant Unit 1.

40 CFR Part 90 – Control of Emissions from Nonroad Spark-Ignition Engines at or Below 19 Kilowatts

This part applies to the manufacture of all new non-road spark-ignition engines and vehicles with gross power output at or below 19 kilowatts (kW) used for any purpose, unless excluded

under paragraph (d) of this section. The requirements of this part "are not applicable" to the Bonanza Power Plant Unit 1.

40 CFR Part 91 – Control of Emissions from Marine Spark-Ignition Engines

This part and all its subparts apply to the manufacture of all marine spark-ignition engines used to propel marine vessels as defined in the General Provisions of the United States Code, 1 U.S.C.3 (1992), unless otherwise indicated. The requirements of this part "are not applicable" to the Bonanza Power Plant Unit 1.

40 CFR Part 92 – Control of Air Pollution From Locomotives and Locomotive Engines

This part and all its subparts apply to the manufacturers, remanufacturers, owners, and operators of locomotive engines. The Bonanza Power Plant Unit 1 does not own a locomotive. The requirements of this part "are not applicable" to the Bonanza Power Plant Unit 1.

40 CFR Part 93 - Determining Conformity of Federal Actions to State or Federal Implementation Plans

The purpose of this part is to implement section 176(c) of the Act. This part "does not apply" to the Bonanza Power Plant Unit 1.

40 CFR Part 94 - Control of Emissions from Marine Compression-Ignition Engines

The provisions of this part apply to manufacturers (including post-manufacture marinizers and dressers), rebuilders, owners and operators of Marine Compression-Ignition Engines manufactured on or after January 1, 2004. This part "does not apply" to the Bonanza Power Plant Unit 1.

40 CFR Part 95 - Mandatory Patent Licenses

The provisions of this part apply to sources which are required to comply with an emission limit in the Clean Air Act, but are unable to acquire a license for the necessary technology due to an issue(s) with the patent holder. This part would only apply to the Bonanza Power Plant Unit 1 if such a patent event occurred.

40 CFR Part 96 - NO_x Budget Trading Program and CAIR NO_x and SO_2 Trading Programs for State Implementation Plans

This part establishes general provisions and the applicability, permitting, allowance, excess emissions, monitoring, and opt-in provisions for the NO_x Budget Trading Program for State implementation plans as a means of mitigating the interstate transport of ozone and nitrogen oxides, an ozone precursor. The Bonanza Power Plant Unit 1 is not subject to any trading programs under this part. This part "does not apply" to the Bonanza Power Plant Unit 1.

APPENDIX H

LIST AND DESCRIPTION OF ALL APPLICABLE REQUIREMENTS

40 CFR Part 97 - Federal NO_x Budget Trading Program and CAIR NO_x and SO_2 Trading Programs

This part establishes general provisions and the applicability, permitting, allowance, excess emissions, monitoring, and opt-in provisions for the federal NO_x Budget Trading Program, under section 126 of the CAA and 52.34 of this chapter. The Bonanza Power Plant Unit 1 is not subject to any trading programs under this part. This part "does not apply" to the Bonanza Power Plant Unit 1.

40 CFR Part 98 - Mandatory Greenhouse Gas Reporting

This part establishes mandatory greenhouse gas (GHG) reporting requirements for owners and operators of certain facilities that directly emit GHG as well as for certain suppliers. Only Subpart D of this part applies to the Bonanza Power Plant Unit 1.

TABLE H-3

PERMIT SHIELD

For the existing sources at the Bonanza Power Plant Unit 1 described in this application, compliance with the requirements of this permit is deemed compliance with the following laws, regulations, and legal requirements that have been specifically identified and set forth in Table H-1 of the permit. Regulations contained in Table H-2 in this application have been determined to be applicable, partially applicable, or not applicable to the Bonanza Power Plant Unit 1. The parts listed in Table H-2 are not applicable to this permit application. Refer to 40 CFR Parts 50 through 82 and 85 through 98.

Appendix I

List of Exemptions Requested

LIST OF EXEMPTIONS REQUESTED

Exemption Request

There are currently no exemptions being requested by the Bonanza Power Plant Unit 1 from any conditions contained in the current EPA approval order #PSD-UO-001-2001.

Appendix J

Emissions Trading Information

EMISSIONS TRADING INFORMATION

Emissions allowance purchases are not anticipated for the Bonanza Power Plant Unit 1. Excess allowances from the Bonanza Power Plant Unit 1 have been sold in the past and the sale of SO_2 emission allowances in the future is anticipated.

Appendix K

Compliance Plan and Schedule

COMPLINACE PLAN AND SCHEDULE

1. The Bonanza Power Plant Unit 1 is in compliance with all applicable requirements as set forth in Table H-1 and will continue to remain in compliance with all applicable requirements. The methods for determining the compliance status of the Bonanza Power Plant Unit 1, with respect to all applicable requirements, is outlined in Appendix G.

2. The Bonanza Power Plant Unit 1 will meet applicable and legal requirements that become effective during the permit term on a timely basis.

Requested Information for Application

A. **Identify applicable requirement for which compliance is not achieved.**
   1. All applicable requirements as set forth in Table H-1 are being met by the Bonanza Power Plant Unit 1.

B. **Narrative description of how compliance will be achieved with this applicable requirement.**
   1. This is not applicable to the Bonanza Power Plant Unit 1.

C. **Detailed schedule leading to compliance.**
   1. This is not applicable to the Bonanza Power Plant Unit 1.

D. **Frequency for submittal of certified progress reports (6 month minimum)**
   1. This is not applicable to the Bonanza Power Plant Unit 1.

Appendix L

Compliance Certification

United States Environmental Protection Agency

OMB No. 2060-0336, Approval Expires 04/30/2012

Federal Operating Permit Program (40 CFR Part 71)

INITIAL COMPLIANCE PLAN AND COMPLIANCE CERTIFICATION (I-COMP)

SECTION A - COMPLIANCE STATUS AND COMPLIANCE PLAN

Complete this section for each unique combination of applicable requirements and emissions units at the facility. List all compliance methods (monitoring, recordkeeping and reporting) you used to determine compliance with the applicable requirement described above. Indicate your compliance status at this time for this requirement and compliance methods and check "YES" or "NO" to the follow-up question.

Emission Unit ID(s): 1-1

Applicable Requirement (Describe and Cite)
EPA PSD operating permit # EPA-UO-001-2001 is the operating permit for the Bonanza Power Plant

Compliance Methods for the Above (Description and Citation): Hourly Continuous Emissions Monitoring, Quarterly Excess emissions reporting, annual particulate testing
The compliance and monitoring requirements are contained in Appendix H of the application

Compliance Status:

_X_ In Compliance: Will you continue to comply up to permit issuance? _X_ Yes ____No

___ Not In Compliance: Will you be in compliance at permit issuance? ___Yes ___No

___ Future-Effective Requirement: Do you expect to meet this on a timely basis? ____Yes ____No

Emission Unit ID(s):

Applicable Requirement (Description and Citation):

Compliance Methods for the Above (Description and Citation):

Compliance Status:

___ In Compliance: Will you continue to comply up to permit issuance? ____Yes ____No

___ Not In Compliance: Will you be in compliance at permit issuance? ___Yes ___No

___ Future-Effective Requirement: Do you expect to meet this on a timely basis? ____Yes _____No

B. SCHEDULE OF COMPLIANCE

Complete this section if you answered "NO" to any of the questions in section A. Also complete this section if required to submit a schedule of compliance by an applicable requirement. Please attach copies of any judicial consent decrees or administrative orders for this requirement.

Unit(s)_____N/A_____ Requirement_____

Reason for Noncompliance. Briefly explain reason for noncompliance at time of permit issuance or that future-effective requirement will not be met on a timely basis:

Narrative Description of how Source Compliance Will be Achieved. Briefly explain your plan for achieving compliance:

Schedule of Compliance. Provide a schedule of remedial measures, including an enforceable sequence of actions with milestones, leading to compliance, including a date for final compliance.

Remedial Measure or Action	Date to be Achieved

C. SCHEDULE FOR SUBMISSION OF PROGRESS REPORTS

Only complete this section if you are required to submit one or more schedules of compliance in section B or if an applicable requirement requires submittal of a progress report. If a schedule of compliance is required, your progress report should start within 6 months of application submittal and subsequently, no less than every six months. One progress report may include information on multiple schedules of compliance.

Contents of Progress Report (describe):

First Report____/____/___ Frequency of Submittal_____

Contents of Progress Report (describe):

First Report____/____/___ Frequency of Submittal_____

D. SCHEDULE FOR SUBMISSION OF COMPLIANCE CERTIFICATIONS

This section must be completed once by every source. Indicate when you would prefer to submit compliance certifications during the term of your permit (at least once per year).

Frequency of submittal: Annual Beginning: 04/ 01 / 2013

E. COMPLIANCE WITH ENHANCED MONITORING & COMPLIANCE CERTIFICATION REQUIREMENTS

This section must be completed once by every source. To certify compliance with these, you must be able to certify compliance for every applicable requirement related to monitoring and compliance certification at every unit.

Enhanced Monitoring Requirements: __X__ In Compliance ____ Not In Compliance

Compliance Certification Requirements: __X__ In Compliance ____ Not In Compliance

United States Environmental Protection Agency

OMB No. 2060-0336, Approval Expires 04/30/2012

Federal Operating Permit Program (40 CFR Part 71)

CERTIFICATION OF TRUTH, ACCURACY, AND COMPLETENESS (CTAC)

This form must be completed, signed by the "Responsible Official" designated for the facility or emission unit, and sent with each submission of documents (i.e., application forms, updates to applications, reports, or any information required by a part 71 permit).

A. Responsible Official

Name. (Last) Grindle (First) Eugene (MI) ____

Title. Plant Manager

Street or P O Box: 12500 East 25500 South

City: Vernal State: UT ZIP: 84078

Telephone (435) 781-5701 Ext. ____ Facsimile (435) 781-5816

B. Certification of Truth, Accuracy and Completeness (to be signed by the responsible official)

I certify under penalty of law, based on information and belief formed after reasonable inquiry, the statements and information contained in these documents are true, accurate and complete.

Name (signed) ____

Name (typed) Eugene Grindle Date: 4 / 3 / 2012

Appendix M

State Provisions

STATE PROVISIONS

State Approval Order DAQE-523-95 issued on June 14, 1995 is no longer applicable to the Bonanza Power Plant Unit 1 and there are no other State of Utah provisions in place with which Bonanza Power Plant Unit 1 must comply.

Appendix N

Acid Rain Provisions

ACID RAIN PROVISIONS

The Bonanza Power Plant Unit 1 is subject to EPA Title IV Acid Rain Provisions. These provisions require the plant to have sufficient SO_2 annual allowances and meet the NO_x provisions contained in 40 CFR 64. 40 CFR 64 requires Bonanza to emit no more than 0.46 lbs/mmBtu of NO_x on an annual average. Bonanza's annual SO_2 allowance allotment exceeds the plant's SO_2 annual potential to emit (PTE).