Five-Year Review Report

Fourth Five-Year Review
for
Re-Solve, Inc. Superfund Site
North Dartmouth, Massachusetts

September 2008

Prepared by:

The United States Environmental Protection Agency
Region 1, New England
Boston, Massachusetts

SDMS Doc ID 295060

Five-Year Review Report

Fourth Five-Year Review
for
Re-Solve, Inc. Superfund Site
North Dartmouth, Massachusetts

September 2008

Prepared by:

The United States Environmental Protection Agency
Region 1, New England
Boston, Massachusetts

EPA
New England

for James T. Owens, Director
Office of Site Remediation and Restoration
U.S. EPA, New England

TABLE OF CONTENTS
FOURTH FIVE-YEAR REVIEW
RE-SOLVE, INC. SUPERFUND SITE
NORTH DARTMOUTH, MASSACHUSETTS

SECTION **PAGE**

ACRONYMS **AC-1**

EXECUTIVE SUMMARY **ES-1**

1.0 INTRODUCTION **1**

2.0 SITE CHRONOLOGY **2**

3.0 BACKGROUND **6**
3.1 Physical Characteristics 6
3.2 Land and Resource Use 7
3.3 History of Contamination 8
3.4 Initial Response 8
3.5 Basis for Taking Action 9

4.0 REMEDIAL ACTIONS **10**
4.1 Source Control (OU2) 10
4.2 Management of Migration (OU3) 11
4.2.1 Remedy Selection 11
4.2.2 Remedy Implementation 13
4.2.3 Operation and Maintenance (O&M) 13
4.3 Institutional Controls 14

5.0 PROGRESS SINCE THE LAST FIVE-YEAR REVIEW **15**

6.0 FIVE-YEAR REVIEW PROCESS **19**
6.1 Administrative Components 19
6.2 Community Notification and Involvement 19
6.3 Document Review 20
6.4 Data Review 20
6.5 Site Inspection 20
6.6 Interviews 21

7.0 TECHNICAL ASSESSMENT **21**
7.1 Question A: Is the Remedy Functioning as Intended by the Decision Documents? 21
7.1.1 Remedial Action Performance and Monitoring Results 22
7.1.2 System Operations/O&M 29
7.1.3 Costs of System Operations/O&M 31
7.1.4 Opportunities for Optimization 32
7.1.5 Early Indicators of Potential Remedy Problems 32
7.1.6 Implementation of Institutional Controls 32
7.2 Question B: Are the Exposure Assumptions, Toxicity Data, Cleanup Levels, and Remedial Action Objectives (RAOs) Used at the Time of the Remedy Selection Still Valid? 33

TABLE OF CONTENTS (cont.)
FOURTH FIVE-YEAR REVIEW
RE-SOLVE, INC. SUPERFUND SITE
NORTH DARTMOUTH, MASSACHUSETTS

SECTION **PAGE**

7.3 Question C: Has Any Other Information Come to Light that Could Call into Question the Protectiveness of the Remedy? 45
7.4 Technical Assessment Summary 45

8.0 ISSUES 48

9.0 RECOMMENDATIONS AND FOLLOW-UP ACTIONS 49

10.0 PROTECTIVENESS STATEMENTS 50

11.0 NEXT REVIEW 51

TABLES

NUMBER **PAGE**

2-1 Chronology of Site Events 2
4-1 Site Contaminants of Concern 12
5-1 Environmental Monitoring 17
7-1 Fish Tissue Sampling Analytical Summary 27
7-2 Catalytic Oxidizer Monitoring Results 29
7-3 Year 10 Operations and Maintenance Costs 32
7-4 Adult Only Vapor Intrusion Screening Values 35
9-1 Recommendations/Follow-up Actions 49

FIGURES

NUMBER

3-1 Site Location Map
4-1 Groundwater Extraction Wells
4-2 Groundwater Treatment System
7-1 North Access Road and South Gap Areas

APPENDICES

A Document Review List/References
B Site Inspection Report and Photos
C Interview List
D Future Risks at the North Access Road and South Gap Areas
E Adult Only Vapor Intrusion Screening Values

ACRONYMS

ARAR	Applicable or Relevant and Appropriate Requirement
AWQC	Ambient Water Quality Criteria
BAT	Best Available Technology
BFP	Biofilter/phytobed
BTEX	benzene, toluene, ethylene, xylene
CCC	Criteria Continuous Concentration
COC	Contaminant of Concern
CERCLA	Comprehensive Environmental Response, Compensation, and Liability Act
CFR	Code of Federal Regulations
CMC	Criteria Maximum Concentration
CVOC	Chlorinated volatile organic compounds
DNAPL	Dense non-aqueous phase liquid
EPA	Environmental Protection Agency
ESD	Explanation of Significant Differences
FDA	Food and Drug Administration
FOSP	Field Operations Support Plan
gpm	gallons per minute
GWTP	Groundwater treatment plant
MADEP	Massachusetts Department of Environmental Protection
MCL	Maximum Contaminant Level
mg/kg	milligrams per kilogram
MOM	Management of Migration
MTBE	Methyl-tert butyl ether
Nobis	Nobis Engineering, Inc.
NPDES	National Pollutant Discharge Elimination System
NPL	National Priorities List
O&M	Operations and Maintenance
OSWER	Office of Solid Waste and Emergency Response
OU	Operable Unit
PCB	Polychlorinated biphenyl
PCE	Tetrachloroethene
ppb	parts per billion
ppbv	parts per billion by volume
ppm	parts per million
PRP	Potentially Responsible Party

RAC	Remedial Action Contract
RAO	Remedial Action Objective
RCRA	Resource Conservation and Recovery Act
RI/FS	Remedial Investigation/Feasibility Study
ROD	Record of Decision
RP	Responsible Party
RW	Recovery Well
SARA	Superfund Amendments and Reauthorization Act
Site	Re-Solve, Inc. Superfund Site
SGL	Seasonal Groundwater Low
SVOC	Semi-volatile organic compounds
SOW	Statement of Work (appended to Consent Decree)
TCE	Trichloroethene
TSCA	Toxic Substances Control Act
TtNUS	Tetra Tech NUS, Inc.
µg/L	micrograms per liter
USACE	United States Army Corps of Engineers
VOC	Volatile organic compound
Watermark	Watermark Environmental, Inc.
Weston	Weston Solutions, Inc.
WMA	Waste Management Area

EXECUTIVE SUMMARY

This is the fourth five-year review for the Re-Solve, Inc. Superfund Site (Site). This statutory review is required since hazardous contamination remains at the Site above levels that allow for unlimited use and unrestricted exposure. The review was completed in accordance with the United States Environmental Protection Agency's (EPA's) "Comprehensive Five-Year Review Guidance" (EPA, 2001). The Site is a former waste chemical reclamation facility that operated between 1956 and 1980. Various types of industrial and commercial solvents were brought to and processed at the facility. Residues, liquid sludge waste, and burned tires were disposed of in four on-site unlined lagoons. An oil waste sludge that accumulated at the bottom of the degreaser distillation still was disposed of on one portion of the Site through land farming. This oil waste sludge was also spread throughout the Site to control dust. These practices resulted in contamination of the soil, sediment and groundwater. In 1980, the State of Massachusetts accepted Re-Solve's offer to surrender its disposal license on the condition that all hazardous waste be removed from the Site. In 1981, all drums, debris, and buildings were removed from the Site, but the contents of the four lagoons remained.

EPA, Region 1, issued a Record of Decision (ROD) for the Site on July 1, 1983. This ROD established Operable Unit 1 (OU1) to perform remedial action work. This work included the excavation of approximately 15,000 cubic yards of contaminated soils and sediments from source areas on Site. Studies conducted near completion of the remedy indicated that extensive contamination remained and the OU1 remedial action was terminated in 1985. The remaining polychlorinated biphenyl (PCB) contamination was to be addressed through a subsequent comprehensive remedial action (Operable Unit 2), to supersede OU1.

EPA issued a second ROD on September 24, 1987 (1987 ROD) which established two additional OUs; the source control component was labeled Operable Unit 2 (OU2) and the management of migration (MOM) component was labeled Operable Unit 3 (OU3).

The 1987 ROD called for site security, excavation and treatment of PCB-contaminated soils and sediments by on-site dechlorination, and treatment of volatile organic compound (VOC) contaminated groundwater by an on-site process involving metals removal, air stripping, and carbon adsorption. The 1987 ROD set cleanup standards for PCBs for Site soil and sediment at 25 parts per million (ppm) and 1 ppm, respectively. Site-related groundwater indicator

compounds identified in the OU3 MOM component of the ROD include trichloroethylene (TCE), tetrachloroethylene (PCE), and methylene chloride. Treatment to 5 parts per billion (ppb) for TCE, PCE, and methylene chloride was expected to reduce other contaminants identified in groundwater to non-detectable levels. Additional groundwater cleanup standards identified in the Consent Decree implementing the 1987 ROD included all Maximum Contaminant Levels (MCLs) established under the Safe Drinking Water Act in effect at the time of the entry of the Consent Decree (May 31, 1989), including, but not limited to, lead, vinyl chloride, p-dichlorobenzene, and 1,1-dichloroethylene.

The first five-year review was completed in July 1993 as a pre-Superfund Amendments and Reauthorization Act (SARA) policy review in accordance with the 1983 ROD. The first review was triggered by the December 12, 1983, remedial action start date for the 1983 ROD (OU1), which involved the excavation of soils and sediments from source areas on Site. The first five-year review was focused on OU1 activities. The first five-year review was a limited analysis, as the remedial action was terminated in 1985 and a second ROD (1987 ROD) established OU2 and OU3. The first five-year review was performed at the same time as OU2 source control activities were being performed. These OU2 source control activities included site security, excavation and treatment of contaminated soils and sediments, and wetland restoration. This work commenced in June of 1993 and was completed in December of 1994. EPA declared the OU2 source control remedy complete in June 1995. The second five-year review, completed in 1998, focused on the remedy for OU2 and concluded that the source control remedy was protective. During OU2 source control remedial action, approximately 36,000 cubic yards of PCB contaminated soils and sediments were treated to an average concentration of 2.8 ppm, backfilled within the waste management area (WMA), and covered with 18-inches of gravel. Institutional controls prevent building construction, extraction of groundwater, excavation beyond six inches, and residential development. The excavation also included the removal of PCB-contaminated soils from the adjacent parcel known as the North Access Road Area (Figure 7-1), which also received an 18-inch gravel cap.

OU3 MOM construction, which took place during 1997 and 1998, included the installation of a two-tiered groundwater extraction system. The inner group of four Tier I extraction wells was installed along the eastern boundary of the WMA to contain the dense non-aqueous phase liquid (DNAPL) contamination and prevent migration beyond the WMA boundary. The outer group of four Tier II extraction wells was installed along the eastern boundary of the dissolved

VOC plume to treat the groundwater contaminants to the established cleanup standards. Full-scale operation of the OU3 MOM remedy commenced on April 27, 1998, using the four Tier I extraction wells. Operation of the Tier II wells commenced on July 27, 1998, in conjunction with the Tier I wells. Monthly average pumping rates for the eight wells have been maintained at or near the target of 48 gallons per minute (gpm) since November 1999 (see Figure 4-1).

The third five-year review, completed in 2003, focused on the remedy for OU3 and concluded that the OU3 MOM remedy was protective and identified two issues for future consideration.

This is the fourth five-year review for the Site.

Five-Year Review Protectiveness Statement:

The OU3 MOM remedy is currently protective of human health and the environment, and exposure pathways that could result in unacceptable risks are currently being controlled through institutional controls and the groundwater extraction system. Restrictions on the use of Site groundwater and security measures at the Site are effectively minimizing the risk of human contact with contaminated groundwater. The groundwater extraction system is effectively capturing the dissolved-phase plume and restricting the migration of DNAPL without impacting water levels in the restored wetlands. Operations and maintenance (O&M) procedures are in place that should maintain the protectiveness of the remedy. However, in order for the OU3 MOM remedy to be protective in the long term, it is recommended that groundwater data be collected using very low detection limits (below inhalation risk-based screening values, such as 0.55 µg/L for PCE and 0.50 µg/L for vinyl chloride) from overburden monitoring wells between the site and off-site buildings to further evaluate potential vapor risks and to confirm that groundwater does not pose a potential risk via vapor intrusion pathway.

The OU1 and OU2 source control remedies were declared complete by EPA in 1987 and 1996, respectively, and judged protective by EPA in the 1998 five-year review (OU1 remedy was terminated and superseded by OU2). Institutional controls prevent building construction, groundwater extraction, excavation beyond six inches deep, and residential development at the original Re-Solve, Inc., property (where the WMA is located). Information encountered during this review indicates a potential for adverse non-cancer health effects for future residents due to PCBs in soil at the adjacent North Access Road Area. However, conditions are considered protective in the short-term of nearby residents due to the presence of an 18-inch gravel cap

over the area. To ensure long-term protectiveness, additional measures to address PCB-contaminated soils should be evaluated, including deed restrictions that prohibit residential and other high-occupancy uses of the relevant parts of the Site, and also deed restrictions that would require maintenance of the layers of uncontaminated soil or gravel cap over the remaining contaminated soil.

The remedy as a whole is considered currently protective of human health and environment, However, the OU2 source control remedy is not considered protective in the long-term and requires evaluation of the additional measures described above.

Five-Year Review Summary Form

SITE IDENTIFICATION		
Site name *(from WasteLAN)*: Re-Solve, Inc. Superfund Site		
EPA ID *(from WasteLAN)*: MAD980520621		
Region: 1	**State:** MA	**City/County:** North Dartmouth/Bristol
SITE STATUS		
NPL status: ☑ Final ☐ Deleted ☐ Other (specify)		
Remediation status (choose all that apply): ☐ Under Construction ☑ Operating ☐ Complete		
Multiple OUs?* ☑ YES ☐ NO	**Construction completion date:** August 1998	
Has site been put into reuse? ☐ YES ☑ NO, but there has been partial ecological reuse via creation of an upland meadow		
REVIEW STATUS		
Lead agency: ☑ EPA ☐ State ☐Tribe ☐Other Federal Agency_____		
Author name: Joseph F. LeMay		
Author title: EPA Project Manager	**Author affiliation:** U.S. EPA Region I	
Review period:** 10/01/03 to 09/30/08		
Date(s) of site inspection: 5/29/2008		
Type of review: ☑Post-SARA ☐ Pre-SARA ☐NPL-Removal only ☐Non-NPL Remedial Action Site ☐ NPL State/Tribe-lead ☐ Regional Discretion		
Review number: ☐1 (first) ☐ 2 (second) ☐3 (third) ☑ Other (specify) _fourth____		
Triggering action: ☐ Actual RA Onsite Construction at OU #____ ☐ Actual RA Start at OU#____ ☐ Construction Completion ☑ Previous Five-Year Review Report ☐ Other (specify)		
Triggering action date *(from WasteLAN)*: 09/29/2003		
Due date *(five years after triggering action date)*: 09/30/2008		

* ["OU" refers to operable unit.]

** [Review period should correspond to the actual start and end dates of the Five-Year Review in WasteLAN.]

Five-Year Review Summary Form, cont'd.

Issues:

- Issue 1: Groundwater data has not been collected using very low detection limits from overburden monitoring wells between site and off-site buildings to conclusively demonstrate groundwater concentrations are below the inhalation risk-based screening values (i.e. 0.55 µg/L for PCE, and 0.50 µg/L for vinyl chloride) for vapor intrusion pathway.

- Issue 2: Some signage around the perimeter of the Site is in need of repair or replacement.

- Issue 3: There is a potential risk to future residents for non-cancer adverse health effects at the North Access Road Area.

Recommendations and Follow-up Actions:

- It is recommended that groundwater data be collected using very low detection limits (below inhalation risk-based screening values i.e. 0.55 µg/L for PCE and 0.50 µg/L for vinyl chloride) from overburden monitoring wells between the site and off-site buildings to further evaluate potential vapor risks and confirm that groundwater does not pose a potential risk via vapor intrusion pathway.

- It is recommended that signage around perimeter of Site be repaired or replaced, as needed.

- It is recommended that additional measures to address PCB-contaminated soils be evaluated, including deed restrictions that prohibit future residential and other high-occupancy uses of the relevant parts of the Site, and also deed restrictions that would require maintenance of the layers of uncontaminated soil or gravel cap over the remaining contaminated soil.

Protectiveness Statement:

The OU3 MOM remedy for the Site is currently protective of human health and the environment, and exposure pathways that could result in unacceptable risks are being controlled through institutional controls and the groundwater extraction system.

The OU1 and OU2 source control remedies were declared complete by EPA in 1987 and 1996, respectively, and judged protective by EPA in the 1998 five-year review (OU1 remedy was terminated and superseded by OU2). Institutional controls prevent building construction, groundwater extraction, excavation beyond six inches deep, and residential development at the original Re-Solve Inc. property (which includes the WMA). Information encountered during this review indicates a potential for adverse non-cancer health effects for future residents due to PCBs in soil at the North Access Road Area. However, conditions are considered protective in the short-term of nearby residents due to the presence of an 18-inch gravel cap over the area. To ensure long-term protectiveness, additional measures to address PCB-contaminated soils should be evaluated, including deed restrictions that prohibit residential and other high-occupancy uses of the relevant parts of the Site, and also deed restrictions that would require maintenance of the layers of uncontaminated soil or gravel cap over the remaining contaminated soil.

The Site as a whole is considered currently protective of human health and environment in the short-term; however, the OU2 source control remedy is not considered protective in the long-term without the additional measures discussed above.

1.0 INTRODUCTION

The purpose of this fourth five-year review is to determine whether the remedy selected for the Site remains protective of human health and the environment. This report summarizes the five-year review process, investigations and remedial actions undertaken at the Site; evaluates the monitoring data collected; reviews, as appropriate, the Applicable or Relevant and Appropriate Requirements (ARARs specified in the ROD for changes; discusses any issues identified during the review; and presents recommendations to address those issues.

The EPA prepared this five-year review pursuant to the Comprehensive Environmental Response Compensation, and Liability Act (CERCLA) § 121 and the National Contingency Plan. CERCLA § 121(c) states:

> "If the President selects a remedial action that results in any hazardous substances, pollutants, or contaminants remaining at the site, the President shall review such remedial action no less often than each five years after the initiation of such remedial action to assure that human health and the environment are being protected by the remedial action being implemented. In addition, if upon such review it is the judgment of the President that action is appropriate at such site in accordance with section [104] or [106], the President shall take or require such action. The President shall report to the Congress a list of facilities for which such review is required, the results of all such reviews, and any actions taken as a result of such reviews."

The EPA interpreted this requirement further in the National Contingency Plan; 40 CFR §300.430(f)(4)(ii) states:

> "If a remedial action is selected that results in hazardous substances, pollutants, or contaminants remaining at the site above levels that allow for unlimited use and unrestricted exposure, the lead agency shall review such action no less often than every five years after the initiation of the selected remedial action."

This is the fourth five-year review for the Site. The first five-year review was completed in July 1993 as a pre-SARA policy review in accordance with the 1983 ROD. The first review was triggered by the December 12, 1983, remedial action start date for the 1983 ROD (OU1) which involved the excavation of soils and sediments from source areas on Site. The second five-year review was completed on September 29, 1998, as a post-SARA statutory review in accordance with the 1987 ROD. The second review was prepared approximately 2 years after construction of the 1987 ROD OU2 source control remedial action was completed (February 1996) and

during the construction start-up of the 1987 ROD OU3 MOM remedy. The third five-year review was completed on September 29, 2003, also as a post-SARA statutory review.

This fourth five-year review assesses the protectiveness of the MOM remedy for OU3 at the Site and the completed source control remedies for OU1 and OU2. Note: the OU1 remedy was terminated and superseded by OU2. This statutory five-year review is required since contaminants remain on the Site above levels that allow for unlimited use and unrestricted exposure. This five-year review was completed in accordance with EPA's Comprehensive Five Year Review Guidance, Office of Solid Waste and Emergency Response (OSWER) publication no. 9355.7-03B-P. For sites with both pre-SARA and post-SARA RODs with remedies that leave contaminants on-site, such as Re-Solve, the guidance clarifies that the pre-SARA remedial actions are subject to post-SARA five-year review procedures. Hence, the second, third and fourth five-year reviews are considered post-SARA statutory reviews.

This report was developed by Joseph LeMay, EPA, Project Manager, with support from Nobis Engineering, Inc. (Nobis) under EPA Contract No. EP-S1-06-03, Task Order No. 0031-FR-FE-0118. This review was performed between April and September 2008 and is based on the approved Work Plan dated April 2008 and modeled after the third five-year review report.

2.0 SITE CHRONOLOGY

This section contains a table that presents the Site historical events in chronological order to allow the reader to see the decisions made that lead to the selection of the clean up remedies for the Site.

Table 2-1
Chronology of Site Events
Re-Solve, Inc. Superfund Site
North Dartmouth, Massachusetts
Page 1 of 4

Event	Date
Re-Solve, Inc. begins operating as a waste chemical reclamation facility.	1956
Massachusetts Division of Water Pollution and Control issues Re-Solve a license to collect and dispose of hazardous waste.	1974
Re-Solve facility closes.	1980
Re-Solve, Inc. offers to surrender its disposal license.	10/21/1980

Table 2-1
Chronology of Site Events
Re-Solve, Inc. Superfund Site
North Dartmouth, Massachusetts
Page 2 of 4

Event	Date
Massachusetts Division of Hazardous Waste agrees to accept Re-Solve's offer, on the condition that all hazardous waste will be removed from the Site.	12/23/1980
Massachusetts Attorney General's office becomes involved due to lack of response from Re-Solve, Inc.	3/1981
Re-Solve, Inc. removes drums and other debris, including buildings, from the Site. Site area covered with an unknown amount of sand.	1981
Massachusetts Department of Environmental Quality Engineering submits a request to EPA to place the Re-Solve Site on the National Priorities List (NPL).	6/19/1981
Re-Solve Site is included in an interim NPL list of 115 priority hazardous waste sites that are eligible for federal assistance as part of the Superfund program.	10/1981
EPA publishes a Remedial Action Master Plan for the Re-Solve Site.	7/16/1982
Remedial Investigation/Feasibility (RI/FS) process initiated to assess the extent of on-site source contamination and evaluate remedial alternatives.	9/1982
Re-Solve Site is placed on the proposed NPL.	12/30/1982
EPA compiles a list of Potentially Responsible Parties (PRPs) and informs each of their potential liability in relation to the Re-Solve Site.	5/1983
RI/FS completed. Four areas identified as contaminant sources. EPA proposes a source control remedial action including: excavation of 7,000 cubic yards of source materials, treatment, and on-site encapsulation.	6/1983
EPA narrows the list of PRPs and begins negotiating to recover past costs and performance of the remedy recommended in the RI/FS.	1983
EPA signs a Record of Decision (ROD) describing the selected remedial action: excavation of 7,000 cubic yards of source materials, transportation and off-site treatment/disposal, and encapsulation of the Site. A modified remedial action is selected in response to public comments. This is considered OU1.	7/1/1983
Re-Solve Site is placed on the Final NPL.	9/8/1983
EPA initiates an off-site RI/FS to assess the extent of contamination that has migrated beyond the boundaries of the Re-Solve Site.	9/1983
U.S. Army Corps of Engineers (USACE) completes design of the source control remedial action. Quantity of waste requiring disposal increased to 15,000 cubic yards.	11/1983
Construction of the source control remedial action begins.	7/1984
EPA completes the off-site RI, confirming the four major source areas identified during the 1983 RI/FS and indicating that the Site is acting as a continuous source of contamination to off-site groundwater, surface water, and sediment.	2/1985
USACE informs EPA that additional investigations performed to evaluate the effectiveness of the source control remedial action revealed extensive polychlorinated biphenyl (PCB) contamination in soils located up to ten feet below the seasonal-low groundwater table. Construction of the remedial action is stopped.	4/1985

Table 2-1
Chronology of Site Events
Re-Solve, Inc. Superfund Site
North Dartmouth, Massachusetts
Page 3 of 4

Event	Date
EPA holds a meeting with the PRP negotiating committee to discuss the off-site RI/FS. PRPs are informed of newly discovered contamination and EPA's intent to perform a Supplemental RI. Negotiations between EPA and PRPs cease.	5/3/1985
EPA initiates a Supplemental RI to address the newly discovered on-site PCB contamination.	9/1985
EPA completes the Supplemental RI.	2/1987
EPA meets with the PRPs to discuss the comprehensive FS development strategy for the Site.	3/1987
EPA holds a public meeting to discuss the project schedule, the findings of the Supplemental RI, and the preliminary list of remedial alternatives that are under development for the FS.	3/11/1987
Supplemental FS is released to the public for review and comment.	6/2/1987
EPA meets with the PRPs and a representative from the Town of Dartmouth to discuss EPA's Proposed Plan for Site remediation.	6/1987
EPA holds a public information meeting to discuss the proposed plan and Supplemental FS. Public comment period extended to July 31, 1987.	6/23/1987
EPA holds a public hearing to allow the public the opportunity to enter oral comments into the record.	7/1/1987
USACE Final Report documents completion of OU1 source control remedial action.	9/21/1987
A second ROD is signed for the Site requiring excavation and on-site treatment of PCB-contaminated soils and sediments (source control), and treatment of volatile organic compound (VOC)-contaminated groundwater by an on-site process involving metals removal, air stripping, and carbon adsorption (management of migration (MOM)). This is considered OU2 and OU3.	9/24/1987
Re-Solve, Inc. and the Settling Defendants enter into an Easement and Restriction Agreement to prohibit the use of the waste management area (WMA), including the underlying groundwater, after all of the remedial activities are completed.	5/22/1989
A group of 224 parties that contributed hazardous substances to the Site (Settling Defendants) enter into a Consent Decree with EPA, resolving their liability for the cleanup.	5/31/1989
Management of Migration (MOM) Pre-Design Report submitted.	12/21/1990
Source Control pilot tests completed.	6/1992
Source Control Pre-Design Report submitted.	10/2/1992
EPA issued an Explanation of Significant Differences (ESD) to decouple the ROD-specified dechlorination process from the low-temperature thermal desorption process for on-site soil treatment. Organic liquid residual waste to now be shipped directly to an off-site Resource Conservation and Recovery Act (RCRA) - and Toxic Substances Control Act (TSCA)-permitted incinerator for disposal.	6/11/1993
Responsible Parties (RPs) begin the source control remedial action.	6/21/1993

Table 2-1
Chronology of Site Events
Re-Solve, Inc. Superfund Site
North Dartmouth, Massachusetts
Page 4 of 4

Event	Date
First Five-Year Review Report completed.	7/1993
RPs complete the source control remedial action.	12/21/1994
EPA determines that all of the source control closeout issues have been adequately addressed and declares the source control remedy OU2 complete.	6/21/1995
A second Restriction Agreement is executed between Re-Solve, Inc. and the Settling Defendants to clarify the scope of the deed restrictions and conform them to the precise wording of the Consent Decree and Statement of Work (SOW).	7/17/1995
EPA completes the Final Source Control Remedial Action Report.	2/1996
Final Approval of the MOM Groundwater Treatment Plant (GWTP) 100% Design.	10/23/1996
Construction of the GWTP begins.	8/20/1997
GWTP construction complete. RPs commence full-scale operation of the MOM remedy.	4/27/1998
An Easement and Non-Interference Agreement is executed between the Settling Defendants and Mr. and Mrs. John Reed, granting access to their property to perform work relating to the Consent Decree.	6/11/1998
EPA Final Preliminary Close Out Report documenting construction completion.	8/19/1998
Second Five-Year Review Report completed.	9/29/1998
Construction and startup of biofilter/phytoremediation pilot field study.	8/2002 – present
Third Five-Year Review completed.	9/2003
RPs submit initial ISCST3 air model supporting request to disconnect Catalytic Oxidizer.	10/30/2003
RPs request recalculation of permit equivalency limit for PCBs.	5/2005
EPA denies RPs request for recalculation of permit equivalency limit for PCBs	6/2006
RPs submit CALFUFF air model supporting request to disconnect Catalytic Oxidizer.	6/29/2006
EPA conditionally approves RPs request to disconnect Catalytic Oxidizer.	11/15/2006
RPs submit final ISCST3 air model supporting request to disconnect Catalytic Oxidizer.	11/28/2006
Use of Catalytic Oxidizer discontinued	12/26/2006
EPA Project Update	2/2007
Fourth Five-Year Review completed.	9/2008

3.0 BACKGROUND

Re-Solve, Inc. operated as a waste chemical reclamation facility from 1956 until its closure in 1980. The Site was placed on the National Priorities List (NPL) on September 8, 1983. The first ROD for the Site was signed on July 1, 1983. The remedial action work performed under the ROD signed in 1983 is considered to be Operable Unit 1 (OU1). On September 24, 1987, a second ROD was signed for the Site, encompassing both on-site and off-site contamination. The 1987 ROD established two new operable units; the source control component was labeled Operable Unit 2 (OU2), and the management of migration component was labeled Operable Unit 3 (OU3).

3.1 Physical Characteristics

The Site is located approximately two miles north of I-95 and the Reed Road interchange (see Figure 3-1) in the northern part of Dartmouth, Massachusetts. The Site is bounded by wetlands to the north and east and a pine and mixed hardwood forested areas to the south and west. The west side of the Site is an upland area with a gradual slope to the east. There is a steeper slope on the north and east edges of the Site leading to the two wetland areas. An Algonquin Gas Pipeline right-of-way abuts the eastern side of the Site.

The Copicut River, Carol's Brook, and an unnamed tributary are located along the east and south sides of the Site and drain into Cornell Pond, which is in the immediate vicinity of the Site. The Copicut Reservoir lies less than one mile north of the Site. The Site is located over an aquifer that serves as a local drinking water source for private residential wells. Groundwater flows to the east and southeast across the Site, toward the Copicut River and the unnamed tributary.

The overburden consists of permeable sands and gravels ranging in thickness from less than 10 feet to approximately 28 feet. A till layer generally is found below the sands and gravels in contact with the bedrock. The till layer varies between 0 and 25 feet in thickness. Many large boulders were found in the overburden during excavation of the contaminated soils in 1994.

Bedrock fractures have been documented in shallow bedrock but the orientation of the fractures is not known (M&E, 1994). Groundwater in the fractured bedrock aquifer reportedly flows in a direction similar to that as flow in the overburden aquifer.

3.2 Land and Resource Use

The Site is located within the Aquifer Protection District Area 3. According to Town of Dartmouth zoning by-laws, the purpose of the Aquifer Protection District is to protect existing and potential groundwater supplies and recharge areas, particularly those areas that contribute to the public water supply. Area 3 is the least restrictive of such area designations and includes potential groundwater development areas and those areas that provide recharge to Area 2 (which is the recharge area of a public water supply well). Commercial, industrial, and residential developments are permitted in Area 3 with certain restrictions.

The land surrounding the Site is also subject to the underlying zoning, Single-residence B, which allows only single-family residential uses and is more restrictive than the Aquifer Protection District Area 3 by-laws. No changes to the Site's Aquifer Protection District area designation or to the Site's underlying zoning are anticipated.

The Rod and Gun Club of New Bedford owns approximately 180 acres northeast of the Site. The land is used for hunting, fishing, and target shooting. The Dartmouth Natural Resource Trust holds 25-acres of land immediately south of the Site bordering the Algonquin Gas Pipeline right-of-way and the Copicut River. A town forest is located about two miles south of the Site, adjacent to I-95. No rare or endangered species, plants, or animals have been reported within a two-mile radius of the Site.

Three existing residences are located within 150 yards of the Site, one to the northwest, one to the west, and the other to the southwest. Six other residences are found along North Hixville Road within one-quarter mile of the Site. A small development of ten lots is under construction southwest of the Site on North Hixville Road. Beyond one-quarter mile of the Site, a number of homes have been constructed on North Hixville Road north of the Site, as well as near Millers Way, north of Old Fall River Road and west of the Site. All residences in the area obtain water from private wells located on their property. The closest public drinking water supply wells are approximately 3 miles south of the Site along Route 6. As of 2006, the population of Dartmouth (which includes North Dartmouth) was 33,054.

The Copicut River, classified as Class B by the Commonwealth of Massachusetts, is located along the eastern edge of the Site. Class B waters are designated for protection and

propagation of fish, other aquatic life, and wildlife, and for primary and secondary contact recreation. Carol's Brook is located along the southern edge of the Site and drains into the Copicut River. The Copicut River drains directly into Cornell Pond approximately one-quarter mile downstream from the Site. Cornell Pond, while not stocked, is popular for sport fishing and has been designated as a secondary water supply for the City of Fall River. Wetland areas have been delineated at the north, east and south boundaries of the Site, around the course of the Copicut River from north of the Site, south toward Cornell Pond and also across North Hixville Road from the Site. Approximately half of the eastern portion of the Site lies within the 100-year floodplain of the Copicut River.

3.3 History of Contamination

Re-Solve, Inc. operated as a waste chemical reclamation facility from 1956 until its closure in 1980. Re-Solve handled a number of hazardous materials, including solvents, waste oils, organic liquids and solids, acids, alkalies, inorganic liquids and solids, and PCBs. Residues from a distillation tower, liquid sludge waste, impure solvents, and burned tires were disposed of in four on-site unlined lagoons. Oil wastes from the distillation tower were spread, or landfarmed, in one portion of the Site and were also used to control dust throughout the Site. Cooling water from the distillation tower was discharged to a shallow on-site lagoon.

In December 1980, the Massachusetts Division of Hazardous Waste agreed to accept Re-Solve Inc.'s offer to surrender its hazardous waste disposal license on the condition that all hazardous waste be removed from the Site. After the Massachusetts Attorney General sued Re-Solve, Inc. and its principals, in late 1981, Re-Solve, Inc. removed buildings, drums, and other debris from the Site. The Site was then covered with a large quantity of sand. The contents of the four on-site lagoons, cooling pond, and oil spreading operation were not removed.

3.4 Initial Response

EPA commenced a Remedial Investigation and Feasibility Study (RI/FS) to assess the extent of on-site source contamination and evaluate remedial alternatives in the fall of 1982. The RI/FS was completed in June of 1983. This study identified the on-site contamination source as approximately 3,100 cubic yards of lagoon wastes and 3,900 cubic yards of contaminated soil.

In July 1983, a ROD was signed by the EPA Regional Administrator that selected a source control remedy for the Site. This ROD called for the excavation of approximately 7,000 cubic

yards of soils contaminated with PCBs at concentrations greater than 50 ppm, off-site disposal of contaminated soil, and capping of the Site as the source control remedy (OU1). During the remedial design, however, the estimated quantity of soils with PCB concentrations greater than 50 ppm was increased to 15,000 cubic yards. Excavation activities began in July 1984. After excavating approximately 15,000 cubic yards of PCB contaminated soils, the OU1 remedial action was terminated in 1985 because studies conducted indicated that PCB contamination existed beyond the previously estimated limits of contamination. At that time, the Site was not capped. The U.S. Army Corps of Engineers documented the completion of the OU1 source control remedial action in a Final Report dated September 21, 1987. The remaining contamination at the Site was to be addressed through a comprehensive second remedial action (see ROD 1987 and OU2 source control below), which supersedes OU1.

An off-site RI/FS, completed in 1985, indicated that the Site was acting as a continuous source of contamination that was migrating off site and impacting groundwater, surface water, and sediment. When the initial source control remedy was terminated in 1985, a supplemental RI was undertaken to further define the extent of on-site PCB contamination. The Supplemental RI was initiated in September 1985 and completed in February 1987. The results indicated approximately 31,000 cubic yards of soil were contaminated with volatile organic compounds and approximately 61,000 cubic yards of soil were contaminated with PCBs. The report also documented contamination of on-site and off-site groundwater with semi-volatile organic compounds (SVOCs), VOCs and PCBs, contamination of downgradient surface water by VOCs, contamination of sediments by VOCs and PCBs, and PCB contamination of fish.

3.5 Basis for Taking Action

A second ROD was signed on September 24, 1987. The second ROD included: site security; excavation and treatment of PCB-contaminated soils and sediments by on-site dechlorination; and treatment of VOC-contaminated groundwater by an on-site process involving metals removal, air stripping, and carbon adsorption. The 1987 ROD set cleanup standards for PCBs for Site soil and sediment at 25 ppm and 1 ppm, respectively. Site-related groundwater indicator compounds identified in the MOM component (OU3) of the ROD include TCE, PCE, and methylene chloride. Treatment to 5 ppb for TCE, PCE, and methylene chloride is expected to reduce other contaminants identified in groundwater to non-detectable levels. Additional groundwater cleanup standards identified in the Consent Decree include all MCLs established under the Safe Drinking Water Act in effect at the time of the entry of the Consent Decree

(May 31, 1989), including, but not limited to, lead, vinyl chloride, p-dichlorobenzene, and 1,1-dichloroethylene.

The 1987 ROD also required deed restrictions and other institutional controls to ensure non-interference with the performance of the work and prohibit the use of the WMA (situated within the original ReSolve, Inc., property), including the groundwater beneath the WMA, after completion of the remedial action. The Responsible Parties (RPs) formed the "Re-Solve Site Group" and assumed responsibility for Site remediation.

On May 31, 1989, a Consent Decree was entered under which the RPs agreed to perform the EPA-selected remedy and reimburse EPA for certain response costs. This resolved the liability of 224 generator parties (Settling Defendants) who contributed hazardous substances to the Site. In September 1989, the United States entered into an administrative settlement with 170 additional generator parties to help cover the cost of the response actions at the Site. In 1990, an action was filed against 19 parties that had refused to join in the prior settlements. In March 2003 a final settlement was announced with the last of over 400 Potential Responsible Parties (PRPs) named in the various enforcement actions filed in 1989 and 1990 (EPA, 2003). This settlement also included reimbursement for response costs.

4.0 REMEDIAL ACTIONS

This section describes the source control (OU2) and MOM (OU3) remedial actions selected for and implemented at the Site under the 1987 ROD. The OU1 remedial action was terminated and superseded by the more comprehensive OU2 remedial action, as described above.

4.1 Source Control (OU2)

The remedy selected in the 1987 ROD included excavation of PCB-contaminated soils located in the unsaturated zone to the seasonal groundwater low (SGL), excavation of PCB-contaminated wetland sediment, on-site treatment of soils and sediments using a dechlorination facility, on-site backfilling and grading of treated soils and sediments, and covering the treated soils with 18 inches of gravel. The ROD required that the disturbed wetlands be restored to their original condition through a wetland restoration program. The ROD determined that it was not technically feasible to remediate PCB-contaminated soils located in the saturated zone, and, consequently, groundwater contamination within the WMA.

Full-scale treatment of PCB-contaminated soils and sediments through on-site low-thermal desorption process (X*TRAX) was completed between June 21, 1993, and July 19, 1994, wetland restoration was performed during the summer of 1994, and Site demobilization was completed on December 21, 1994. Approximately 36,000 cubic yards of PCB-contaminated soils and sediments were excavated, treated and backfilled in the WMA. The excavation included the removal of PCB-contaminated soils from adjacent parcels known as the North Access Road and South Gap Areas, which are illustrated on Figure 7-1. Treated soils and sediments were reduced to an average PCB concentration of 2.8 ppm, well below the 25 ppm performance standard. An 18-inch gravel cover was placed and graded over the treated soils in the WMA and North Access Road.

During a June 21, 1995, inspection, EPA determined that all the OU2 source control closeout issues had been adequately addressed and declared the OU2 source control remedy complete. EPA documented the completion of the OU2 source control remedial action in a “Final Remedial Action Report,” dated February 1996. Following the completion of the OU2 source control remedy, long term O&M activities were performed until the OU3 MOM remedy began in 1997. Once OU3 MOM construction activities began in 1997, source control operations and maintenance activities were considered complete.

The Re-Solve Site Group voluntarily constructed a native New England grass/wildflower meadow on the Site during June and July 1999, replacing the 18-inch gravel cap installed within the WMA at the completion of the OU2 source control remedial action. (The meadow did not however replace the gravel cap over the North Access Road Area.) This beneficial ecological reuse was intended to reestablish native species at the Site and enhance wildlife habitat.

4.2 Management of Migration (OU3)

The OU3 MOM component of the 1987 ROD included treatment of VOC-contaminated groundwater by an on-site process. The ROD estimated it would require ten years to achieve the groundwater remediation level; however, this period has been extended due to the presence of DNAPL at the Site (which was not known at the time of the signing of the 1987 ROD).

4.2.1 Remedy Selection

The OU3 MOM remedy in the 1987 ROD specified active restoration of the overburden and bedrock aquifers contaminated with VOCs using on-site treatment involving air stripping and

carbon adsorption. Since EPA determined that it was not feasible to remediate PCBs in the saturated zone and groundwater, the OU3 MOM remedy specified implementation of institutional controls on groundwater use within the WMA.

Table 4-1
Site Contaminants of Concern
Re-Solve, Inc. Superfund Site
North Dartmouth, Massachusetts

Compounds Identified in 1983 ROD
trichloroethylene (TCE)
tetrachloroethylene (PCE)
Methylene chloride
Compounds Identified in the Consent Decree
Lead
Vinyl chloride
p-dichlorobenzene
1,1-dichloroethylene

Site-related groundwater indicator compounds identified in the ROD included TCE, PCE, and methylene chloride. Treatment to 5 ppb for TCE, PCE, and methylene chloride is expected to reduce other compounds identified in groundwater to non-detectable levels. Additional groundwater cleanup standards identified in the Consent Decree include all MCLs established under the Safe Drinking Water Act in effect at the time of the entry of the Consent Decree (May 31, 1989), including, but not limited to, MCLs for lead, vinyl chloride, p-dichlorobenzene, and 1,1-dichloroethylene. The three indicator compounds and these four additional compounds are referred to as Site contaminants of concern (COCs).

The 1987 ROD called for reinjection of treated groundwater into the aquifer to encourage flushing of the contaminants. However, this portion of the remedy was removed during the OU3 MOM design process since the bulk of contaminated soils above the SGL were excavated and treated during the OU2 source control remedy. Also, groundwater-modeling simulations prepared by Pappadopolous Associates showed that the inclusion of reinjection wells might pose a risk of remobilizing DNAPL (M&E, 1996). Therefore, treated groundwater is discharged

directly to the Copicut River in compliance with National Pollutant Discharge Elimination System (NPDES) equivalency discharge limits.

4.2.2 Remedy Implementation

OU3 MOM construction, which took place during 1997 and 1998, included the installation of a two-tiered groundwater extraction system (see Figure 4-1). The inner group of four groundwater extraction wells, or recovery wells (RW), referred to as Tier I (RW1 to RW4), was installed along the eastern boundary of the WMA to contain the source area contamination and prevent migration beyond the WMA boundary. The outer group of four groundwater extraction wells, referred to as Tier II (RW5 to RW8) was installed along the eastern boundary of the dissolved VOC plume to clean up the contamination to the established cleanup standards. Twenty-five additional monitoring wells were installed to supplement existing wells and to form a network used for both water level measurements and water quality sampling.

The groundwater treatment system (see Figure 4-2) includes the following process units: phase separator, equalization, metals oxidation, chemical precipitation, sludge thickening, sludge dewatering, multi-media filtration (for supplemental metals removal), air stripping, carbon adsorption, and surface water discharge of treated effluent.

Equipment, performance, and operations testing were completed in accordance with the start-up and testing requirements outlined in the final Field Operations Support Plan (FOSP). Following review of these results, EPA granted approval and the RPs commenced full-scale operation of the OU3 MOM remedy on April 27, 1998. Only the four Tier I extraction wells were run for the first three-months of operation; the Tier II wells were started up on July 27, 1998. EPA and the Massachusetts Department of Environmental Protection (MADEP) conducted a pre-final inspection on June 11, 1998, and identified minor “punch list” items requiring completion. EPA documented overall construction completion, including OU-3 MOM Remedial Action, in the “Final Preliminary Close Out Report,” dated August 19, 1998.

4.2.3 Operation and Maintenance (O&M)

The O&M phase of the OU3 MOM remedy includes O&M of the groundwater treatment plant (GWTP), process monitoring of the treatment system, and environmental performance monitoring. Process monitoring includes sampling and analysis of: groundwater from each extraction well; combined influent to the GWTP; process water at various stages within the

treatment system; effluent from the GWTP; and sludge and spent carbon produced during plant operation. Process monitoring is intended to determine the effectiveness of operation of the primary unit processes within the GWTP and compliance with effluent discharge and air emission criteria.

Environmental performance monitoring includes sampling and analysis of groundwater, surface water, fish tissue, residential wells, and wetlands monitoring. Performance monitoring for groundwater provides the basis for evaluating whether the cleanup standards are being attained downgradient of the Tier I (DNAPL source containment) extraction wells and, if so, whether one or more of the Tier II (dissolved plume containment and remediation) extraction wells can be shut down. As the groundwater cleanup proceeds, it is expected that the outer set (Tier II) of extraction wells will be successively shut down, followed by interim monitoring to ensure that cleanup standards continue to be attained downgradient of the wells. The Tier I extraction well system will continue to operate to prevent migration beyond the WMA.

In 2007 the RPs requested a reduction in pumping rates in Tier II wells and a systematic shut down of some of these wells. EPA is considering the request.

4.3 Institutional Controls

Institutional controls, as required by the 1987 ROD, Consent Decree, and SOW, include site security, agreements requiring owners to provide access to property for purposes of implementing remedial actions, and deed restrictions. Specific site restrictions recorded at the registry of deeds with respect to the original ReSolve, Inc. property (which includes the WMA but excludes the North Access Road Area and South Gap Area) include: a) no intrusive earthwork activities beyond six inches deep and only for superficial regrading; b) no off-site trucking of on-site soils; c) any landscaping to be accomplished by bringing fill on-site; d) any development plans to be approved by EPA and the Commonwealth; and e) no residential development of any kind on this property, as well as the drilling or installation of any wells for the extraction of groundwater, and construction and/or use of any buildings or structures. Institutional controls concerning Site security are in place on-site and include fencing, security cameras, a secured front gate, and bilingual warning signs along the perimeter fence and Site boundary. Bilingual warning signs regarding elevated levels of PCBs are provided to the Dartmouth Board of Health for placement along the Copicut River and Cornell Pond.

Land access has been ensured through an Easement and Non-Interference Agreement, executed on June 11, 1998, between the Settling Defendants and Mr. and Mrs. John Reed (adjacent property owners including the South Gap Area) and also an Easement, Restriction, and Non-Interference Agreement, executed on September 30, 2005, between the Settling Defendants and The Rod and Gun Club of New Bedford, Inc. These Agreements grant access to property owned by the Reeds and the Rod and Gun Club to facilitate sampling and maintenance activities in connection with the implementation of the OU3 MOM Remedy and ensures non-interference in the conduct of such work. These Agreements are recorded at the Bristol County Registry of Deeds.

Access for the remedial actions and restrictions on future use of the WMA have been ensured though an Easement and Restriction Agreement executed on May 22, 1989, between Re-Solve, Inc. and the Settling Defendants. A second Restriction Agreement was executed on July 17, 1995 to clarify the scope of the existing deed restrictions and make the descriptions consistent with that of the Consent Decree and SOW. This second deed restriction was recorded on August 4, 1995, at the Bristol County Registry of Deeds. These easement and deed restrictions, which are described in the previous paragraphs, are perpetual and will remain in force after the completion of the OU3 MOM.

5.0 PROGRESS SINCE THE LAST FIVE-YEAR REVIEW

This is the fourth five-year review for the Site. The previous five-year review (TtNUS, 2003) concluded that the OU3 MOM remedy for the Site was protective of human health and the environment, and exposure pathways that could result in unacceptable risks were being controlled through institutional controls and the groundwater extraction system. The third five-year review also included the following recommendations:

- Consideration of an alternate analytical method for PCBs in effluent to allow for lower detection limits and thus a lower discharge limit.

- Recalculation of NPDES permit equivalency limits for cadmium, silver, and zinc, based on changes to the Ambient Water Quality Criteria (AWQC), to verify that effluent concentrations meet these limits and maintain protectiveness of the remedy.

Following the third five-year review, the RPs provided a letter response to EPA's recommendations. The RPs concurred with EPA's recommendation to use an alternate analytical method for PCBs allowing for lower detection limits (ENSR, 2004). The RPs proposed using EPA Method 1668A for PCB analysis on a semi-annual basis instead of continuing with the routine method on a quarterly basis. The RPs also concurred with EPA's recommendations to recalculate the NPDES permit equivalency limits for cadmium, silver, and zinc based on changes to the AWQC. These recalculations resulted in reducing the NPDES permit equivalency limits for cadmium, silver, zinc, and also mercury (ENSR, 2004). Effluent concentrations continue to meet these limits, maintaining protectiveness of the remedy.

Since the last review, the OU3 MOM remedy has continued to operate in an O&M phase. The tenth year of O&M ended in April 2008. However, at the time of this review, the ninth year of O&M was the most recent data available. The environmental monitoring performed during the ninth year of O&M is shown in Table 5-1.

The GWTP has operated consistently, with only occasional interruptions for either routine maintenance or non-routine activities, such as carbon changeouts, filter media changeout, and installation of new equipment. O&M activities are reported on a monthly basis, and include the prior month's effluent discharge data, a continuous record of the monthly effluent pH, and aquatic toxicity data (as required based on monitoring frequency).

System monitoring and environmental monitoring continue at the frequencies agreed to by the EPA and MADEP. The environmental monitoring requirements are summarized in Table 5-1. EPA approved modifications to the original FOSP requirements in September 2000, December 2001, and February 2005 (see Table 5-1). The modifications included a reduction in the number of annual residential well locations; reduction in the frequency of wetland piezometer, groundwater elevation and surface water measurements; wetland assessments; modification of the number and frequency of sampling of wells included in the water quality monitoring program; and reduction in the frequency of surface water quality monitoring. All of these changes were initially proposed by the RPs and after review and evaluation of the potential impacts, EPA and MADEP agreed to certain modifications that would ensure sufficient monitoring to continue to assess the protectiveness and adequacy of the OU3 MOM remedy.

Table 5-1
Environmental Monitoring
Re-Solve, Inc. Superfund Site
North Dartmouth, Massachusetts

Monitoring Component	Original FOSP[1] Requirement	Revised Requirement	Performed During the 9th Year of O&M
Quality Monitoring			
Groundwater Quality Monitoring (VOCs, SVOCs, PCBs, and Total Metals)	Quarterly monitoring at 42 wells	Annual Monitoring in May at 46 wells, semi-annual monitoring in Nov. at 19 wells (Approved by EPA February 16, 2005; Effective February 2005)	Annual monitoring in May at 46 wells, semi-annual monitoring in Nov. at 20 wells, no quarterly monitoring in February or August.
Surface Water Quality Monitoring (VOCs)	Quarterly monitoring at SW-1 and SW-3; annual monitoring at SW-2, 6 and 7	Annual monitoring at SW-1, 2, 3, 5, 6 and 7 (Approved by EPA September 14, 2000; Effective May 2000)	Annual monitoring at SW-1, 2, 3, 5, 6 and 7 (No change)[2]
Residential Well Sampling (VOCs)	Annual monitoring at 16 wells	Annual monitoring at 9 wells (Approved by EPA September 2000; Effective May 2000)	Annual monitoring at 9 wells (No change)
Fish Sampling (% Lipids and PCBs)	Annual sampling for modified list of up to 6 species	Annual sampling for trout, eel, brownhead, perch and largemouth bass (Approved by EPA September 2000; Effective May 2000)	Annual sampling for trout, eel, brownhead, perch and largemouth bass (No change)
Hydraulic Monitoring			
Groundwater Level Measurements	Monthly monitoring at 65 wells	Quarterly monitoring at 65 wells (Approved by EPA September 14, 2000; Effective May 2000)	Quarterly monitoring at 65 wells (No change)
Surface Water Measurements	Monthly monitoring at SW-1 through SW-10	Quarterly monitoring at SW-1 through SW-7 (Approved by EPA September 14, 2000; Effective May 2000)	Quarterly monitoring at SW-1 through SW-7 (No change)
Wetlands Water Level and Soil Moisture Measurements	Twice weekly monitoring during March 15 through October 31	Once every other week during March 15 through October 31 (Approved by EPA September 14, 2000; Effective May 2000)	Once every other week during March 15 through October 31 (No change)
Wetlands Assessments	3 events annually (May, July and September)	2 events annually (May/June and August/September) (Approved by EPA September 14, 2000; Effective May 2000)	2 events annually (May/June and August/September) (No change)

1. Field Operations Sampling Plan
2. No change from third five-year review.

Source: ENSR, 2007

The RPs prepared and submitted a Work Plan in July 2001 describing a planned pilot field study using a biofilter and phytoremediation (BFP) system as a potential alternative groundwater treatment approach. The alternative treatment approach used natural processes as a means of significantly reducing energy use (propane and electricity) associated with the current groundwater treatment system. The three-year pilot study was approved by the agencies, constructed during the summer of 2002, and operated in a start up phase with treated groundwater through the fall of 2002. Untreated groundwater was introduced to the pilot system in December 2002 at a flow of approximately 0.2 gpm. Although the BFP study was intended to operate for only three years, it continues to be evaluated by the RPs. The system originally operated with two trenches (Trench A and B). However, based on the RP's evaluation of performance, the BFP study currently operates with one trench, Trench A, at a flow rate of 0.05 gpm (Last, 2008). The GWTP continues to operate normally during the BFP study.

In December 2006, the catalytic oxidizer was removed from service in order to eliminate unnecessary propane consumption. The RPs submitted to EPA a Final CALPUF air modeling Memorandum on June 29, 2006, to evaluate 24-Hour Screening Modeling for Persistent Calm Periods for the Air Stripper at the Site, and Final Report Catalytic Oxidizer Study on November 28, 2006, utilizing ISCST3 model to evaluate VOC emissions from the air stripper without the use of the catalytic oxidizer at nearby receptors. The study concluded that no health effects would occur within the Site, in the vicinity of the Site, or at seven nearby homes without the catalytic oxidizer in use (ENSR, 2006). The blower in the catalytic oxidizer remains in use to draw air through the packed tower air stripper and the tank ventilation system. This conversion involved changing the controls for the blower, so that the blower is now controlled directly by the main treatment system control panel and by a separate hand switch. The modified controls also include interconnection of the blower low pressure switch directly to the main control panel, instead of the oxidizer control panel (ENSR, 2007). Discontinuation of the catalytic oxidizer has resulted in an annual reduction of over 16,000 gallons of propane consumption which translates into approximately 104 tons of carbon dioxide per year (Watermark, 2008).

Treatment system monitoring increased when the catalytic oxidizer was removed from service to further monitor VOC emissions. Increased monitoring included the following:

- Sampling and Analysis of the Combined Air Stream from the Tank Vent System and the Air Stripper by TO-14;

- Increase the currently required annual sampling and analysis to:
  - Quarterly for the first year
  - Semi-annually for one year thereafter
  - Return to annually thereafter;

- Sampling and Analysis of Influent Groundwater to the Treatment System (sampling port S-2) on a monthly basis (when the effluent sample is collected). This frequency will continue until an EPA-approved modification is granted.

6.0 FIVE-YEAR REVIEW PROCESS

This section provides a summary of the Five-Year Review process and the actions taken to complete the review.

6.1 Administrative Components

EPA, the lead agency for this five-year review, issued Task Order No. 0031-FR-FE-0118, to Nobis, under EPA Remedial Action Contract (RAC) No. EP-S1-06-03, Task Order 0031, on March 12, 2008, to perform the five-year review. The EPA Task Order Project Officer was Joseph LeMay.

The schedule established by EPA included completion of the review by August 2008.

6.2 Community Notification and Involvement

EPA issued a press release on July 31, 2008, announcing its review of the progress of the Re-Solve Site cleanup. During implementation of the source control remedy in the early 1990s, there were a number of concerns and complaints of noise, and other issues expressed by the public. During the implementation of the OU3 MOM remedy, the Site has received little interest from the public. No official community notification of the preparation of this fourth five-year review has been done.

There were three interviews completed. Records of these interviews are in Appendix C. In general, the individuals who were interviewed had no significant complaints.

EPA has supported an annual Fishing Derby at Cornell Pond since 1998. The objective of the fishing derby is to involve the public in the collection of the fish species needed for the ongoing

environmental monitoring program and also to remind the public of the advisory not to consume eels caught in Cornell Pond and the Copicut River and to practice catch and release. Over the five years that EPA and the RPs have sponsored the fishing derby, the public has actively participated and adequate fish tissue samples have been collected. EPA has publicized the derby on its website and also through town officials and residents.

6.3 Document Review

This fourth five-year review consisted of a review of relevant documents including decision documents and monitoring reports, as specified in the EPA SOW for this review (See Appendix A), as well as all restrictions recorded at the Registry of Deeds .

6.4 Data Review

This fourth five-year review included a review of available O&M data that has been collected since startup of the GWTP. O&M data that was reviewed included process and environmental monitoring data as well as O&M cost records. See Section 7.1.1 for a presentation of specific monitoring results.

6.5 Site Inspection

A Site inspection was conducted on May 29, 2008, with representatives from the RP's contractor (Weston), and subcontractor (Watermark), EPA's contractor (Nobis), and the Town of Dartmouth. The inspection of the GWTP included a review of the groundwater treatment process and equipment within the building. The outdoor portion of the inspection included the northern and eastern wetland areas, security at the perimeter of the Site, the restored wildflower meadow, the Algonquin Pipeline right-of-way, and the area used for the BFP pilot study. A Site Inspection report, including a Site inspection check list and Site photographs is included in Appendix B.

The WMA is secured by chain-link fence and locking gates and is posted with bilingual signs. Due to past incidents of vandalism, a security system, including cameras on the exterior corners of the GWTP building, was installed during construction of the OU3 MOM remedy. Since the OU3 MOM remedy has been operating there have been no incidents of vandalism.

The restored meadow portions of the WMA are growing well and were mowed in the fall of 2007 for the first time. Bird boxes, brush piles and sand piles (for turtles) have been placed around

the upland portions of the meadow as habitat enhancements. The restored east and north wetlands are well vegetated. Mr. Michael O'Reilly, the Town of Dartmouth Environmental Coordinator, expressed continued satisfaction with the appearance of the restored northern and eastern wetland areas.

6.6 Interviews

General discussions and observations were documented during the Site inspection on May 29, 2008. Telephone interviews were also completed to supplement the Site inspection interviews. The list of individuals to be interviewed and questions to be asked were provided by EPA. The record of interviews regarding this five-year review is shown in Appendix C.

Mr. O'Reilly also said that there is little public concern or interest in the Site at the present time. Mr. O'Reilly stated that there is possible Town interest in future re-use of the existing building at the Site for storage of Town vehicles. Mr. O'Reilly participated in the Site inspection and noted that he hadn't been to the Site since the third five-year review in 2003. He indicated his satisfaction with the continued success of the wetland restoration.

The Town of Dartmouth Tax Assessor's Website confirmed that the owner of record of the Site is Re-Solve, Inc.

7.0 TECHNICAL ASSESSMENT

This section provides a technical assessment of the remedies implemented at the Site. The technical assessment criteria are outlined in the *Comprehensive Five-Year Review Guidance* (EPA, 2001).

7.1 Question A: Is the Remedy Functioning as Intended by the Decision Documents?

Yes, the review of site-related documents, data, O&M procedures, ARARs, and site inspection notes indicate that the remedy is functioning as intended by the ROD. With respect to the OU2 source control remedy, this judgment is based upon the fact that PCB-contaminated soils and sediments above action levels were removed prior to the 1997, as documented in the February 1996 OU2 Source Control Remedial Action Report and August 1998 Preliminary Close Out Report. With respect to the OU3 MOM remedy operating at the Site (i.e. pumping and treating contaminated groundwater), this judgment has been made based on an evaluation of

environmental and process monitoring data that has been collected during operation of the OU3 MOM remedy in accordance with the FOSP and EPA-approved modifications to the FOSP; and through a review of O&M procedures and documentation. This section provides a summary of the information that was evaluated for this five-year review.

7.1.1 Remedial Action Performance and Monitoring Results

Remedial action performance and monitoring information that is collected as part of the OU3 MOM O&M phase includes both environmental quality and process monitoring data. The environmental parameters that are monitored as part of the OU3 MOM O&M include sampling and analysis of groundwater, surface water, fish tissue, residential wells, wetlands restoration, and groundwater and surface water elevations. The process monitoring parameters include groundwater extraction rates, influent contaminant concentrations, and effluent contaminant concentrations. Results of the environmental and process monitoring, with an emphasis over the past five years, are discussed below. The latest data from:

- Groundwater and residential well monitoring occurred in May 2007.
- Surface water monitoring occurring in August 2006.
- Weekly DNAPL monitoring at well point.
- Fish Tissue monitoring occurring in September 2006
- Wetlands assessment monitoring occurring in September 2006.
- Treatment plant influent samples collected annually.
- Treatment plant effluent samples collected in 2006 and 2008.
- Treatment plant sludge sampled as needed.

Groundwater Quality Monitoring. Groundwater quality data from on-site and off-site monitoring wells have been collected on a quarterly basis since system startup in April 1998. A network of 42 monitoring wells was monitored as part of the first four years of OU3 MOM O&M (1997 – 2001). During the latter part of the fifth year of operations (in 2002), the RPs added four (4) more wells to the network, SE, SW, PN, and PS (see Figure 4-1). At present, each of these 46 wells is monitored on an annual basis, and 20 of these wells are monitored on a semi-annual basis. Monitoring wells are sampled for chlorinated volatile organic compounds (CVOCs) and benzene, toluene, ethylene and xylene (BTEX) compounds as part of the performance monitoring program. The baseline monitoring event performed in August 1997 included analysis for VOCs, SVOCs, PCBs, and metals.

The most recent complete environmental monitoring round that was available at the time of this five-year review occurred in May 2007. The May 2007 environmental monitoring round was a full monitoring event, including all 46 monitoring wells in the network, as well as sampling of nine (9) residential wells. An evaluation of groundwater samples collected during this event revealed detections of COCs that continue to exceed MCLs in eight (8) of the bedrock monitoring wells (W-6D, MW-9B, JB, JS, MW-13B, MW-12B, MW-1B, and MW-11B) and one (1) of the overburden monitoring wells (MW-6). (See Table 4-1). The bedrock monitoring wells containing COCs exceeding MCLs are all located between Tier I and Tier II extraction wells (ENSR, 2007). (See Figure 4-1.)

A quantitative trend analysis was performed in October 2007 by the RPs to assess the statistical significance of the CVOC concentration trends that have been observed since system startup (ENSR, 2007). Trend analyses in previous years were performed on all 46 monitoring wells, however this analysis was not performed on 23 wells in which the results were obvious by inspections (ENSR, 2007). The results of the RP contractor's trend analysis indicated that CVOC concentrations in 12 of the 46 monitoring wells (JB, MW-11B, MW-12A, MW-13B, MW-14B, MW-1B, MW-3A, MW-6, MW-9B, W-4D, MW-2, and MW-7) that were analyzed for this study have exhibited a downward trend since the baseline sampling event in 1997. Two of these wells (MW-2 and MW-7) contained contaminant concentrations below detection limits during the May 2007 groundwater sampling round (ENSR, 2007). Generally, the concentration trends that were observed for BTEX compounds follow those exhibited by CVOCs; downward trends or concentrations below detection limits/MCLs with no trend.

The RP contractor reported that according to the trend analysis, 29 of the 46 monitoring wells exhibited no trend. Twenty five of these 29 wells showed a flat line with concentrations below detection limits. Three monitoring wells (JS, MW-4, and W-6D) exhibited fluctuating concentrations with no upward or downward trend, but still contained concentrations of contaminants in excess of their MCLs and one monitoring well (W5-D) exhibits low persistent levels of total dichloroethene (DCE). According to this analysis, only one well (MW-12B) exhibited an upward concentration trend between April 1997 and May 2007, due to its downgradient proximity to documented DNAPL locations (ENSR, 2007).

Nine residential water wells were sampled in May 2007 as part of the annual sampling event. None of the samples contained concentrations of any VOCs above laboratory reporting limits (ENSR, 2007). A review of this round of sampling, as well as a review of residential well sampling results since the baseline sampling event in 1997, revealed very few detections of VOCs in the residential water supply in the vicinity of the Site, none approaching federal MCLs.

Groundwater Elevations. Groundwater elevations have been monitored at 58 wells since startup of the OU3 MOM remedy in 1998. Groundwater elevation measurements were collected monthly for the first two years of operations, and have been collected quarterly since August 2000. An evaluation of groundwater elevation data indicates that the drawdown from the groundwater extraction system is effectively containing the DNAPL source area and is not negatively affecting groundwater levels at the Site (ENSR, 2002a).

Surface Water Elevations. Surface water elevations and flow rates have been monitored from ten surface water stations since startup of the OU3 MOM remedy in 1998. For the first two years of operations, surface water elevations and flow rates were measured monthly from all ten surface water locations. Since August 2000, surface water elevation and flow rate has been measured quarterly at seven locations. An evaluation of current and historical surface water levels and stream flow rates indicates that drawdown from the groundwater extraction system does not appear to be negatively impacting the wetlands restoration effort. Field observations made during the Site inspection support this determination.

Groundwater Extraction Rates. The recommended flow rate for all extraction wells combined in the OU3 MOM remedial design was 40 gpm with a design capacity of 80 gpm (M&E, 1994). The RPs determined that to better ensure hydraulic capture, the extraction system should operate at a minimum monthly average total pumping rate of 45 gpm. A target rate of 48 gpm was established to provide an adequate margin of safety. Around the time that the second tier of extraction wells began operating in July 1998, the RPs determined that RW-7 and RW-8 should pump at 10 gpm to better ensure hydraulic capture. Due to yield limitations, RW-2 could consistently pump at only 3 gpm. A review of monthly average pumping rates for extraction wells shows that since November 1999, when adjustments to the groundwater treatment system were designed and implemented, monthly average flow rates that are below the minimum flow rate of 45 gpm have been recorded only five times (ENSR, 2007).

DNAPL Well Point Monitoring. In 1993, DNAPL was discovered in a well point located southeast of the present GWTP building during the implementation of the OU1 source control remedy. Weekly monitoring of the well point for the presence of DNAPL has continued since that time. However, no DNAPL has been observed in this DNAPL well point since January 2000. At the time of the detection, DNAPL was removed (Charbonnier, 2003a).

Surface Water Quality Monitoring. The surface water quality monitoring program currently consists of annual monitoring at six surface water stations. The baseline surface water monitoring event included analysis for VOCs, SVOCs, PCBs, and metals; the routine annual performance monitoring includes only VOCs. Sample data collected during the most recent monitoring round (August 2006) indicates that no VOCs were detected above the reporting limit (ENSR, 2007). These reporting limits are below the relevant Ambient Water Quality Criteria. Generally, the concentrations of VOCs detected in surface water samples collected from each of the sampling stations have decreased since startup of the OU3 MOM remedy in 1998.

Fish Tissue Monitoring. The fish tissue monitoring program consists of annual sampling from the Copicut River and Cornell Pond for trout, eel, brown bullhead, perch, pickerel and large-mouth bass which are analyzed for PCBs and percent lipids. However, no specimens of sufficient size of these species have been captured in the Copicut River since the September 2002 sampling event. Samples of bullhead, eel, largemouth bass, yellow perch, and bluegill sunfish were captured from Cornell Pond during the most recent sampling event in September 2006 and submitted to the laboratory for analysis. No pickerel were caught during the 2006 sampling event.

Results from the September 2006 sampling indicated a range of 0.060 to 0.700 milligrams per kilogram (mg/kg) PCBs in various fish collected from Cornell Pond (ENSR, 2007). An evaluation of PCB concentrations detected in fish tissue samples collected throughout the nine year monitoring period (since startup of the OU3 MOM remedy in 1998) indicates that very seldom has a fish tissue sample contained PCBs at a concentration that exceeds the Food and Drug Administration (FDA) action limit of 2 mg/kg PCBs. Samples of American eel that were collected in 2001 and 2005 and large-mouth bass that were collected in 2000 and 2001 exceeded the 2 mg/kg action limit, but sampling results from the most recent event suggest that PCB concentrations in fish tissue from Cornell Pond and the Copicut River are currently below

the FDA action limit and have decreased since the Remedial Investigation. Fish tissue data are presented on Table 7-1.

Wetland Assessment. Subsequent to the OU3 MOM baseline wetland assessment conducted in July 1997, routine assessments have been performed over the intervening nine years (1998 – 2006). Since the OU3 MOM groundwater treatment system became fully operational in July 1998, there has been no documented evidence of negative impacts on the wetlands. Therefore, there has been no need to implement any of the mitigation measures outlined in the OU3 MOM FOSP (April 1997).

Various invasive species have been present in both the northern and eastern wetland areas since October 1998. While limited removal of invasive species by hand continues to be performed, there has not to date been any suggestion of the use of herbicides to control the expansion of the invasive species. The most recent assessment reports (June and September, 2006) were not available at the time of this five-year review; however, previous assessment reports have concluded that the areas monitored contain established wetland plant communities and wetland hydrologic conditions with little evidence of erosion or sedimentation (Weston, 2003a; Weston, 2003b).

Treatment Plant Influent and Effluent Sample Collection. Treatment system influent samples have been collected annually for VOCs each April since 2001. Prior to April 2001, influent samples were collected on a monthly basis from January 2000 to March 2001. No treatment influent samples were collected in 1999, and one sample was collected approximately five months after startup in October 1998. Influent concentrations of total VOCs that have been measured during operation of the treatment system (1,000 micrograms per liter (µg/L) to 2,100 µg/L) have been well below the design influent concentration of 54,000 µg/L for total VOCs.

Table 7-1
Fish Tissue Sampling Analytical Summary
Re-Solve, Inc. Superfund Site
North Dartmouth, Massachusetts

Range of PCB Concentrations (mg/kg)	Copicut River	Cornell Pond					
	Brook Trout	American Eel	Brown Bullhead	Pickerel	Large-mouth Bass	Yellow Perch	Blue Gill
Baseline (1997)	0.15 – 0.30	0.42 – 0.84	NC	NC	0.04 – 0.17	0.04 – 0.08	NC
1st Year (1998	0.08 – 0.24	0.24 – 0.69	0.08 – 0.12	NC	0.03 – 0.11	0.02 – 0.04	NC
2nd Year (1999)	0.16 – 0.59	0.51 – 0.76	0.06 – 0.32	0.03 – 0.08	0.06 – 0.22	0.11 – 0.47	NC
3rd Year (2000)	0.05 – 0.47	0.38 – 0.65	0.12 – 0.12	NC	0.03 – 2.20	0.06 – 0.11	NC
4th Year (2001)	0.062	0.44 – 2.09	0.24	NC	0.20 – 2.20	0.20 – 0.37	0.148
5th Year (2002)	0.32	0.26 – 0.36	0.055 – 0.079	NC	0.067 – 0.20	0.073 – 0.10	0.052 – 0.10
6th Year (2003)	NC	0.14 – 0.32	0.059	0.05	0.060 – 0.087	0.051	--
7th Year (2004)	NC	0.05	0.075 – 0.10	NC	0.051 – 0.120	0.059 – 0.085	0.093 – 0.20
8th Year (2005)	NC	0.52 – 6.60	0.08 – 0.110	NC	0.13 – 0.25	0.054 – 0.097	0.05
9th Year (2006)	NC	0.66 – 0.70	0.064 – 0.280	NC	0.098	0.06 – 0.10	0.05
10th Year (2007)	NC	0.24 – 0.84	0.057 – 0.110	NC	0.025– 0.095	0.025– 0.083	0.025– 0.053

NC = none collected

FDA action limit for PCBs = 2 mg/kg

Source: ENSR, 2008

Effluent samples have been collected monthly since July 1998 to comply with NPDES permit equivalency requirements. The samples are routinely analyzed for VOCs, SVOCs, PCBs, metals, and total suspended solids. Data from effluent samples that were collected between August 2006 and March 2008 were available for this five-year review. This data showed that no contaminants exceeded reporting limits during the range of time provided. The previous five-year review discussed instances where arsenic, bis(2-ethylhexyl)phthalate, toluene, methyl-tert butyl ether (MTBE), and TCE have been detected in the past at concentrations above detection limits but well below NPDES permit equivalency limits (TtNUS, 2003).

Other Treatment Plant Monitoring. The sludge generated in the GWTP is run through a filter press and tested for total solids, metals, VOCs, and PCBs prior to transport off-site in 55-gallon drums. The drummed filter cake is transported off-site for disposal as non-hazardous, non-Toxic Substances Control Act (TSCA) waste. The phase separator (see Figure 4-2) is monitored weekly for DNAPL, but none has been detected. Air emissions from the catalytic oxidizer were monitored annually until its discontinuation in 2006. Air samples from the influent to the oxidizer and the emissions from the oxidizer were collected and the VOC removal efficiency then calculated. The reported removal efficiencies annually are shown in the table below.

Table 7-2
Catalytic Oxidizer Monitoring Results
Re-Solve, Inc. Superfund Site
North Dartmouth, Massachusetts

Year of Operation	Influent VOC Concentration (parts per billion by volume)	Removal Efficiency (%)
1	4,148 ppbv	98%
2	2,539 ppbv	94%
3	2,395 ppbv	94.7%
4	2,953 ppbv	95%
5	2,953 ppbv	95%
6	5,139 ppbv	96%
7	4,638 ppbv	93.2%
8	892 ppbv	96.1%
9	Removed From Service	

Source: ENSR, 2006

As discussed in Section 5.0, treatment system monitoring increased when the catalytic oxidizer was removed from service to further monitor VOC emissions. Increased monitoring included the following:

- Sampling and Analysis of the Combined Air Stream from the Tank Vent System and the Air Stripper by TO-14;

- Increase the currently required annual sampling and analysis to:
  - Quarterly for the first year
  - Semi-annually for one year thereafter
  - Return to annually thereafter;

- Sampling and Analysis of Influent Groundwater to the Treatment System (sampling port S-2) on a monthly basis (when the effluent sample is collected). This frequency will continue until an EPA-approved modification is granted.

7.1.2 System Operations/O&M

The GWTP has operated continuously, with brief shutdowns for repairs and maintenance, and infrequent shutdowns of a few days for events such as when the new air stripper was installed, new filter media was added to the multi-media filter vessels, carbon was changed out, and other planned maintenance events. Chemical usage is tracked and reported on a monthly basis. Variations in usage from month to month have been minor and reflect adjustments to the operation of the system such as improvements in the metals precipitation process, and acid to backwash the multi-media filters. The pH of the effluent is continuously recorded to ensure compliance with the effluent discharge limits. Increases in effluent pH typically seen immediately following carbon changeouts are tracked closely, as is the elevation in arsenic concentrations in the effluent, also associated with new carbon.

Routine maintenance typically includes: weekly monitoring of the phase separator for DNAPL; operation of the filter press and shipment of dewatered sludge off-site in 55-gallon drums; cleaning pipelines and the clarifier; replacement of extraction well pump heads with spares from inventory on-site. A number of maintenance items are performed routinely as preventative measures to optimize the operation of the GWTP.

Non-routine maintenance issues have been diagnosed and managed effectively with input from the regulatory agencies. For example, during system startup and also during subsequent carbon changeouts, a spike in pH and elevation of arsenic concentrations in the effluent was observed. In 1998 to remedy this problem, the agencies required that three additional monitoring activities be performed after each carbon changeout: pH monitoring; hourly collection of samples for arsenic analysis; and collection of the monthly effluent sample within 24 hours of restart. These monitoring activities are described further in the following paragraphs.

The pH must be monitored before the first vessel, after the first vessel, and after the second vessel on a daily basis for three weeks after system restart to ensure the pH declines to acceptable levels. Since 1999, the O&M subcontractor has used acid addition to adjust the pH in the effluent tank. The RPs indicated that experience has shown the effluent pH declines to acceptable levels (i.e. below 8.3) in about 10 days (Charbonnier, 2002). When the pH reaches acceptable levels, typically in less than three weeks, the additional pH monitoring is discontinued.

Elevated arsenic concentrations in the effluent immediately after carbon changeout resulted in the agencies requiring collection of hourly effluent samples for the first 24 hours after system restart. The 24 hourly samples are composited into four 6-hour samples and the four composites are analyzed for arsenic. The data reported from the eight carbon vessel changeouts completed since system startup in 1998 show arsenic concentrations generally decreasing from over 100 µg/L to approximately 20 µg/L within the 24-hour period. With each data set, the RP contractor has performed calculations to determine whether there was an exceedance of the average monthly arsenic discharge limit of 8.2 µg/L. The calculations to date have shown that the average monthly limit has not been exceeded. The Ninth Year Operations Report recommended the discontinuation of arsenic monitoring during carbon changeout based on data collected since 1998 (ENSR, 2007). EPA is considering the recommendation.

For ten years the GWTP has operated very reliably since commencement in 1998. Preventative maintenance is completed routinely by the O&M subcontractor. This has resulted in a very effective system that consistently meets the effluent and emission limits established during the design effort.

7.1.3 Costs of System Operations/O&M

The OU3 MOM 60% Design (M&E, 1994) included an estimate of annual operating costs of approximately $460,000, based on continuous operation at 40 gpm. The components of the estimated costs included labor (34%), sampling and analysis (29%), energy (25%), chemicals and carbon (8%), and sludge disposal (4%). The annual costs for the tenth year of operation of the GWTP, through April 30, 2008, at 48 gpm were approximately $465,521 (Symmes, 2008). The RPs confirmed that the year ten costs are typical of the costs incurred for years one through nine. The largest component of the Year 10 O&M costs is labor (approximately 68%), followed by energy (10%), chemicals (8%), sludge/filter cake disposal (6%), replacement equipment parts (5%), and analytical (3%). The Year 10 costs are summarized in the table below.

Table 7-3
Year 10 Operations and Maintenance Costs
Re-Solve, Inc. Superfund Site
North Dartmouth, Massachusetts

Cost Item	Year 9 Cost (approximate)	Percent of Total Annual Cost
Labor	$314,349	68 %
Energy	$ 48,195	10 %
Chemicals/Carbon	$ 35,877	8 %
Sludge Disposal	$ 27,600	6 %
Equipment	$ 25,000	5 %
Analytical	$ 14,500	3 %
Total Cost (approximate)	$465,521	100 %

Source: Symmes, 2008

While the Year 10 labor costs are approximately double the labor costs estimated in the OU3 MOM 60% Design (M&E, 1004), the estimated cost for the sampling and analysis may have included labor for sample collection as well as analysis. The actual labor costs do include sample collection. In addition, the labor associated with preventative maintenance may be higher than that estimated in the design. However, the preventative maintenance appears to result in a well functioning system with minimal down time.

Some potential reasons for the differences in O&M costs include the following. Labor costs higher than estimated may reflect escalation in labor rates, inclusion of incidental spare parts, and labor-intensive preventative maintenance. Actual energy costs are approximately one half of that estimated. This likely reflects design and operating procedures to minimize the costs of operating the plant. Chemical, carbon, and disposal costs relate to the constituents of the groundwater, the flow rate of the system, and the chemistry involved in the treatment process units. The Year 10 disposal costs included filter cake and spent multi-media from the filter vessels; disposal of filter media was not included in the remedial design estimate. The consistency in the annual costs since the previous five-year review indicates that the remedy is operating effectively with minimal down time.

7.1.4 Opportunities for Optimization

Since the GWTP began operation in April 1998, a number of minor changes have been made to the system to optimize the operation over time. Only one change was made during the past five years.

In December 2006, the catalytic oxidizer was removed from service in order to eliminate unnecessary propane consumption. The blower in the catalytic oxidizer remains in use to draw air through the packed tower air stripper and the tank ventilation system. This conversion involved modifying the controls for the blower. Discontinuation of the catalytic oxidizer has resulted in an annual reduction of over 16,000 gallons of propane consumption.

The performance of the system is routinely monitored by the on-site O&M personnel. The O&M staff has been effective in identifying opportunities to improve the GWTP and proposing and implementing solutions to optimize the operation of the system.

7.1.5 Early Indicators of Potential Remedy Problems

No early indicators of potential remedy problems were identified during the five-year review process.

7.1.6 Implementation of Institutional Controls

Institutional controls that are in place at the Site to maintain the protectiveness of the remedy include fencing, signage, deed restrictions on building construction, groundwater extraction, intrusive work beyond 6 inches, and residential development at the original Re-Solve, Inc.

property, and a deed restriction prohibiting interference with the remedy on property owned by Mr. & Mrs. John Reed, and a deed restriction prohibiting groundwater extraction on the property owned by the Rod and Gun Club of New Bedford, Inc. (As noted elsewhere, there are no deed restrictions or other institutional controls in place at other parts of the Site, including the North Access Road Area.) Observations made during the Site inspection indicate that the fencing at the perimeter of the Site is in very good condition and is marked with warning signs. Some of the signage appears to be missing or to have deteriorated over time and should be replaced. All gates are locked during the day, except for the main entrance gate which is left unlocked when treatment plant personnel are on site. All barbed wire appeared to be intact and no evidence of trespassing was observed during the inspection or reported by the plant O&M staff. An inspection of the Site and interviews with site O&M personnel produced no evidence to suggest that site groundwater is being used in any way that is in violation of the deed restriction that has been placed on the Site.

7.2 Question B: Are the Exposure Assumptions, Toxicity Data, Cleanup Levels, and Remedial Action Objectives (RAOs) Used at the Time of the Remedy Selection Still Valid?

No. Most exposure assumptions, toxicity data, cleanup levels and RAOs used at the time of the remedy selection are still valid. However, additional shallow groundwater data with detection limits below inhalation risk-based screening values should be collected from groundwater monitoring wells between the Site and off-site buildings to further evaluate potential vapor risks and confirm that groundwater does not pose a potential risk via vapor intrusion pathway (as further described below). Also, residential exposures to contaminated soil at the North Access Road Area and South Gap Area (See Figure 7-1) were not previously evaluated, and new standards for cleaning up PCB-contaminated soils have been promulgated since the 1987 ROD.

Changes in Exposure Pathways. The ROD identified exposure scenarios for existing Site conditions and potential Site development conditions (residential). The primary routes of human exposure to contamination that were identified at the time of the ROD, and that are applicable after the removal of most PCB-contaminated soils and sediments, were through inhalation of VOCs released from surface water, dermal contact with surface water, and human ingestion of fish. The primary route of human exposure identified under potential Site development conditions was the ingestion of on-site groundwater.

Contaminated soils located at the North Access Road Area and South Gap Area were excavated as part of the source-control remedy; however, some soils contaminated with PCBs were detected in post-excavation confirmatory sampling at levels below action limits (e.g., the highest level at the North Access Road Area was 22 ppm). Property at both areas is zoned residential. An 18-inch gravel cap has been placed over the contaminated soils at the North Access Road Area. No cap was placed at the South Gap area. While an institutional control allowing access to the Site for monitoring purposes and prohibiting interference with the Remedy is in place for the South Gap Area, in neither area is there a deed restriction or other institutional control prohibiting residential or other uses. Risks from potential future exposures at these areas were not previously evaluated. Appendix D provides calculations for future residential risks from dermal and ingestion exposures to the contaminated soils at each of these areas separately. Results of these calculations indicate a potential for adverse non-cancer health effects for future residents at the North Access Road Area. The current conditions at the North Access Road Area are considered protective in the short-term due to the presence of the gravel cap. Although the North Access Road Area is unfenced on one side, a barbed-wire fence separates the nearest residential dwelling from the access road.

Vapor. The vapor intrusion pathway was not evaluated in the original public health evaluation from the Draft Off-site Remedial Investigation Supplement (Camp Dresser & McKee, 1987). Groundwater clean-up goals for the Site (MCLs from the Consent Decree and 5 ppb each for TCE, PCE, and methylene chloride) are based on drinking water exposures. Drinking water standards used as clean-up levels are not designed to be protective of the vapor intrusion pathway.

EPA's OSWER *Draft Guidance for Evaluating the Vapor Intrusion to Indoor Air Pathway from Groundwater and Soils* Table 2c, established target groundwater concentrations for the protection of indoor air (EPA, 2002b). The target groundwater concentration for several of the values in the draft guidance are based on MCLs rather than inhalation risks, including TCE, PCE, and vinyl chloride. The following inhalation risk-based values should be used for evaluating groundwater data for these contaminants: TCE- 2.89 µg/L, PCE – 0.55 µg/L, and vinyl chloride – 0.50 µg/L (EPA Region I, 2008). (See Appendix E for calculations and assumptions and table below.)

Table 7-4
Adult Only Vapor Intrusion Screening Values
Re-Solve, Inc. Superfund Site
North Dartmouth, Massachusetts

Chemical	IUR ($\mu g/m^3)^{-1}$	Target Indoor Air (10^{-6} risk) ($\mu g/m^3$)	Target Soil Gas Concentration (AF=0.1) ($\mu g/m^3$)	Henry's Law Constant (H)	Target Groundwater Concentration (µg /l)
Tetrachloroethylene	5.90E-06	4.12E-01	4.12E+00	7.50E-01	5.50E-01
Vinyl chloride	4.40E-06	5.53E-01	5.53E+00	1.10E+00	5.03E-01

Assuming Shallow Soil Gas to Indoor Air Attenuation Factor =0.1

In evaluating the vapor intrusion pathway, the following considerations have guided the inquiry:

- institutional controls are in place that prevent building construction, groundwater extraction, excavation beyond six inches deep, and residential development on the original ReSolve, Inc., property;

- groundwater flow direction is to the east/southeast towards the Copicut River and extensive wetlands;

- dissolved contaminants in groundwater undergo attenuation processes such as dilution, dispersion and degradation;

- shallow overburden monitoring wells between the site and off-site buildings/dwellings have historically been non-detect with low detection limits (0.5 µg/L – 2 µg/L); and

- the distance from these monitoring wells to the off-site building range between 100'-200'). Since the buildings are up-gradient and cross-gradient of these monitoring wells, the groundwater by the buildings should be impacted less by site groundwater contamination.

Since the vapor intrusion risk-based concentration for TCE (2.89 µg/L) is higher than the detection limit for TCE (1 µg/L), and TCE has not been detected in the monitoring wells between

the Site and off-site buildings, it is certain that TCE does not pose an unacceptable inhalation risk.

However, the groundwater data is not conclusive with respect to inhalation risks for PCE and vinyl chloride, because the detection limits at these monitoring wells between the Site and off-site buildings were above the inhalation risk-based screening values of 0.55 µg/L for PCE and 0.50 µg/L for vinyl chloride. These risk-based screening concentrations represent a potential cancer risk of 1-in-1 million. Since these two chemicals were undetected at detection limits of 1 µg/L, the potential cancer risk can be no more than 1.8-in-1 million (i.e. 1/0.55 = 1.8) for PCE and no more than 2-in-1 million (i.e. 1/0.50 = 2) for vinyl chloride. Both of these potential risk levels are below EPA's acceptable risk level of 1-in-10,000, so it is very likely that vapor intrusion does not pose a potential risk. Nevertheless, to confirm this, additional shallow groundwater data of PCE and vinyl chloride should be collected from these wells between the Site and off-site buildings using detection limits below the inhalation risk-based screening values. The detection limits used should be lower than 0.55 µg/L for PCE and 0.50 µg/L for vinyl chloride.

Institutional controls. Site fencing, signage, land access restrictions, and deed restrictions have been established as required by the ROD, Consent Decree, and SOW (see Section 4.3). These institutional controls appear to be largely effective in restricting human contact with contaminated media (groundwater, surface water, sediment, and fish) at the Site. The Site is fenced with barbed wire and secured gates, with warning signs present along the entire length of the fence line. Some of the signage appears to be missing or to have deteriorated over time and should be replaced. Security cameras are mounted on the outside of the treatment building and provide surveillance of the property from a monitor located in the building's control room. A deed restriction is on file at the Bristol County Registry of Deeds prohibiting building construction, groundwater extraction, excavation beyond six inches deep, and residential development at the original Re-Solve, Inc. property (which includes the WMA but excludes the North Access Road Area and the South Gap Area). Observations made during the Site inspection and records review indicate that these controls are intact and effective at eliminating human exposure pathways that could impact the protectiveness of the OU3 MOM remedy. As noted in the above Changes in Exposure Pathways, no institutional controls are in place to prevent potential adverse non-cancer health effects for future residents at the North Access Road Area.

One potential improvement related to exposure pathways, recommended by a Town official during the third five-year review, was the installation of additional signage at the public access points to Cornell Pond. Cornell Pond is located downstream of the Site and is subject to a fishing advisory due to PCBs and mercury (not a Site contaminant). Signage at Cornell Pond appears to be adequate at this time.

Changes in Land Use. Land use in the vicinity of the Site is still residential in nature, zoned by the Town of Dartmouth as Single Residence B, SRB. A new development of ten lots, including one completed new home, is under construction approximately ¼ mile upgradient from the Site on North Hixville Road. This change in land use is consistent with prior zoning and the assumptions of the ROD. Contaminated groundwater emanating from the Site is not expected to have an impact on this development because it is located a significant distance from and upgradient of the Site. The Site itself is fenced and is generally not accessed except by the O&M contractor to perform O&M activities.

New Contaminants and/or Contaminant Sources. No new contaminants or contaminant sources have been identified since startup of the OU3 MOM remedy. The contaminants detected at highest concentrations in groundwater samples are those identified in the ROD as COCs. (See Table 4-1). No toxic byproducts of the remedy were identified during the review.

Changes in Standards or Newly Promulgated Standards. As part of this five-year review, ARARs for the Site presented in the ROD were reviewed, and a review of current ARARs was conducted. With respect to the completed OU2 source control remedy, soil- and sediment-specific ARARs cited in the ROD (and those that were added in the Explanation of Significant Differences (ESD)) have been met. However, since the 1987 ROD and 1993 ESD, EPA has promulgated a new standard for remediation of PCBs (40 C.F.R. § 761.61). The new standard sets a presumptive cleanup standard of 1 ppm for soil cleanups in high occupancy areas, 25 ppm for low occupancy areas, and 50 ppm for low occupancy areas with certain fencing and signage. Alternatively, under the standard PCB contamination above these limits may be left in place beneath caps meeting certain design specifications, or different numerical limits may be used at a particular site based on a site-specific risk assessment approved by EPA. Although the original 25 ppm cleanup standard was set based on a site-specific risk assessment, this standard may no longer be protective over the long term given potential residential and other

uses of certain parts of the Site. Accordingly, to ensure long-term protectiveness, additional measures to address PCB-contaminated soils should be evaluated, including deed restrictions that prohibit residential and other high-occupancy uses of the relevant parts of the Site, and also deed restrictions that would require maintenance of the layers of uncontaminated soil or gravel cap over the remaining contaminated soil.

ARARs identified in the 1987 ROD and current ARARs that are applicable to the OU3 MOM remedy include the following:

- Resource Conservation and Recovery Act (RCRA),
- Toxic Substances Control Act (TSCA),
- Clean Water Act (including NPDES, AWQC, BAT)
- Executive Order 11990 (Protection of Wetlands),
- Safe Drinking Water Act (including MCLs and wetland protection), and
- Clean Air Act.

RCRA and *TSCA* are the applicable regulations that are used to determine the proper disposal procedures for filter cake that accumulates from the filter press or for disposal of spent carbon from the vapor-phase carbon adsorption units (see Figure 4-2). DNAPL, if recovered, would also be subject to the disposal requirements established by RCRA (and TSCA, if PCBs were present). As mentioned in Section 7.1.1 (Other Treatment Plant Monitoring), no DNAPL has been collected from the phase separator since the GWTP has been in operation. However, DNAPL removed from the well point located immediately southeast of the treatment plant facility has been collected and disposed of in accordance with RCRA and TSCA regulations. As indicated in Section 7.1.1, no DNAPL has been found in the well point since January 2000. These regulations, as currently constituted, continue to maintain the protectiveness of the remedy.

The *Clean Water Act* is the statutory basis for the NPDES permit program, which determines the maximum allowable effluent discharge limits for water treated on-site. The NPDES permit equivalency limits that are being used were developed in 1998 shortly after the second five-year review for the Site. These limits were calculated using a system flow rate of 50 gpm, with AWQC and Best Available Technology (BAT) limits as the basis for the calculation of permit equivalency limits.

The AWQC (now known as National Recommended Water Quality Criteria) that are applicable to the Site include fresh water Criteria Maximum Concentrations (CMC), fresh water Criteria Continuous Concentration (CCC), and human health criteria based on the consumption of fish (M&E, 1994). EPA updated the AWQC, which were used to develop equivalency limits for inorganic contaminants, in 2006 (EPA, 2006). Changes to the AWQC for inorganic contaminants since 1998 include the reduction of the CMCs for cadmium from 4.3 µg/L to 2.0 µg/L and for silver from 3.4 µg/L to 3.2 µg/L; the reduction of the CCC for cadmium from 2.2 µg/L to 0.25 µg/L; the reduction of the human health criteria for consumption of fish for antimony from 4,300 µg/L to 640 µg/L, selenium from 11,000 µg/L to 4,200 µg/L, thallium from 6.3 µg/L to 0.47 µg/L, and zinc from 69,000 µg/L to 26,000 µg/L; and an increase of the human health criteria for consumption of fish for mercury from 0.051 µg/L to 0.3 µg/L. Since none of these inorganics are COCs for the Site, nor have they been detected at elevated levels (if at all) in effluent samples, the NPDES permit equivalency limits being used for inorganic contaminants in effluent are assumed to be protective of human health and the environment.

BAT limits were used as the basis for the development of discharge permit equivalency limits for most of the organic contaminants for which limits were established. The previous five-year review indicated that BAT limits for VOCs and SVOCs that are included in the effluent sampling data have not changed since 1995. Current BAT limits for direct discharge point sources that do not use end-of-pipe biological treatment (40 CFR 414 - Organic Chemicals, Plastics, and Synthetic Fibers) were unavailable at the time of this five-year review. Since it is assumed that BAT limits have remained unchanged since inception of the OU3 MOM remedy, the permit equivalency limits being used to evaluate organic contaminant levels in effluent originating from the GWTP remain protective of human health and the environment.

The NPDES permit equivalency limit used to evaluate the concentrations of PCBs in effluent was lowered from 0.5 µg/L to 0.004 µg/L following the 2003 five-year review based on the publishing of a lower AWQC for PCBs in 2002 and the improved ability of commercial laboratories to report lower detection limits. The current AWQC for human consumption of fish for PCBs remains at the 0.000064 µg/L level established in 2002. The discharge from the MOM treatment system was tested using the lower limit methodology in September 2004, March 2005, September 2005, and April 2006. The resulting concentration was below the 0.004 µg/L limit each time. The revised NPDES permit equivalency limit remains protective of

human health and the environment and the current OU3 MOM treatment system is achieving those limits and level of protectiveness.

The *Clean Water Act* and *Executive Order 11990* are the applicable regulations that provided the guidelines for excavation in wetlands and the subsequent restoration of wetlands. No new or modified requirements are contained within these regulations that impact the protectiveness of the OU3 MOM remedy.

The *Safe Drinking Water Act* is the legislation that enabled the establishment of MCLs, which are the relevant and appropriate regulations for groundwater located outside of the boundaries of the WMA. No new or modified MCLs have been established for Site indicator compounds since the last five-year review, so the protectiveness of the remedy is not affected.

The *Clean Air Act* was an ARAR established in the ROD that served primarily to regulate air emissions from the on-site thermal desorption unit used during the source control remedial action and to establish contaminant loading limits for air emissions from the catalytic oxidizer during the MOM remedy. Although the catalytic oxidizer is no longer in use, air emissions are still generated through the air stripper, and monitored in accordance with EPA's approval to disconnect the catalytic oxidizer. Compliance with this ARAR continues to maintain the protectiveness of the remedy.

Changes in Toxicity and Other Contaminant Characteristics. EPA recommended toxicity values for two of the indicator contaminants (TCE and PCE) have changed since the 1987 ROD. However, chemical-specific concentration thresholds used to assess the risk associated with contaminants present at or in the vicinity of the Site include MCLs, FDA action limits for PCBs in fish, and NPDES permit equivalency limits. MCLs and FDA action limits were used as clean-up goals for protection of exposures through ingestion of groundwater as drinking water and ingestion of fish, rather than using the risk evaluation to develop site-specific goals. Therefore, changes in toxicity or other contaminant concentrations would not impact the protectiveness of the remedy for these potential exposures since a site-specific risk evaluation was not used to develop the concentration threshold. NPDES effluent limits were recalculated in 1998 shortly after the 1998 (second) five-year review report using 50 gpm as the system flow rate. The most recent procedures established by the NPDES permit program recommended and implemented changes to the limits for PCBs following the 2003 (third) five-year review. No further changes to

limits for PCBs are necessary. The current NPDES effluent limits are considered protective of human health and the environment.

In order to confirm the likely protectiveness of the remedy for potential vapor intrusion exposures, additional samples from the perimeter of the Site will need to be collected and analyzed for PCE and vinyl chloride using low detection limits below the inhalation risk-based screening values (i.e. 0.55 µg/L for PCE, and 0.50 µg/L for vinyl chloride).

Changes in Risk Assessment Methods. Subsequent to the draft Off-site Remedial Investigation Supplement (Camp Dresser & McKee, 1987) and the 1987 ROD, changes have occurred in the formulas used to calculate dermal and inhalation risks from exposures to groundwater during household water use and the methods for evaluating the vapor intrusion pathway. However, since the target cleanup levels for groundwater outside of the WMA were based on MCLs rather than site-specific risk-based concentrations, changes in risk assessment methods would not affect the protectiveness of the remedy for exposures to groundwater used as drinking water.

As noted above, the vapor intrusion pathway is not likely a concern at or beyond the Re-Solve Superfund Site. However, the groundwater data from overburden monitoring wells has been collected using detection limits that are higher than inhalation risk-based screening criteria for vapor. New samples should be collected between site and off-site buildings to conclusively demonstrate that groundwater concentrations are below the inhalation risk-based screening values (i.e. PCE – 0.55 µg/L, and vinyl chloride – 0.50 µg/L). Therefore, additional shallow groundwater data should be collected from these wells using detection limits below the screening values to further evaluate vapor risks and confirm that groundwater does not pose a potential risk via a vapor intrusion pathway.

Expected Progress Towards Meeting RAOs. The OU1 and OU2 source control remedies successfully removed PCB-contaminated soils and sediments above action levels, as documented in the September 1987 USACE Final Report, February 1996 OU2 Source Control Remedial Action Report and August 1998 Preliminary Close Out Report, and institutional controls prevent building construction, groundwater extraction, excavation beyond six inches deep, and residential development at the original Re-Solve, Inc. property (but not at other areas, including the North Access Road Area). The following is a summary of the remedial response objectives for the OU2 Source Control remedy (the OU1 remedy was terminated and

superseded by OU2) that were established in the ROD with a brief assessment of the progress that has been made towards meeting these objectives.

Prevent or mitigate the continued release of hazardous substances, pollutants and contaminants to the overburden and bedrock groundwater aquifers and to the wetlands, the unnamed tributary, Copicut River and Cornell Pond. The OU1 remedy removed approximately 15,000 cubic yards of PCB-contaminated soils and sediments. The OU2 remedy removed, treated and backfilled approximately 36,000 cubic yards of PCB-contaminated soils and sediments, remediated and restored approximately 1 acre of wetlands (i.e. North and East Wetlands), and installed an 18-inch gravel cap.

Reduce risks to human health associated with direct contact with contaminants in surface and sub-surface soils and sediments. PCB-contaminated soils above action levels were removed, treated to average PCB concentration of 2.8 ppm, and backfilled and capped on-site with 18 inches of gravel. Institutional controls also prevent building construction, groundwater extraction, excavation beyond six inches deep, and residential development at the original Re-Solve, Inc. property (but not at other properties, including the North Access Road Area). As noted above, there is a potential for adverse non-cancer health effects for future residents at the North Access Road Area. However, current conditions at the North Access Road Area are considered protective in the short-term due to the presence of the 18-inch gravel cap.

Reduce risks to freshwater aquatic life associated with contact with PCB contaminated sediments and subsequent bioaccumulation. Freshwater aquatic life includes both sediment dwelling organisms and those at higher trophic levels. The OU2 remedy removed PCB-contaminated sediments above action levels from adjacent wetlands (i.e. North and East Wetlands), and successfully restored the wetlands.

Reduce the volume, toxicity or mobility of hazardous substances, pollutants and contaminants. The OU2 remedy significantly reduced the volume and mobility of PCB-contaminated soils and sediments through the X*TRAX low-thermal desorption treatment process. Soils contaminated with PCBs were significantly reduced to an average concentration of 2.8 ppm.

The following is a summary of the remedial response objectives for the OU3 MOM remedy that were established in the ROD with a brief assessment of the progress that has been made towards meeting these objectives.

Reduce risks to human health associated with dermal contact and subsequent absorption with surface water, ingestion of groundwater and inhalation of volatiles released from groundwater and surface water. Analytical results from surface water samples collected as part of the OU3 MOM environmental monitoring program have demonstrated a substantial decrease in VOCs since implementation of the remedy. Implementation of the source control remedy and operation of the OU3 MOM remedy have had a positive impact on the quality of surface water in the vicinity of the Site, and the risks to human health from dermal contact or inhalation of VOCs appear to have been considerably reduced.

An evaluation of contaminant concentrations in monitoring wells that are part of the environmental monitoring network indicates that a majority of the monitoring wells (41 of 46 wells) exhibit either downward trends (12 of 46) or no trend (29 of 46) with twenty five of the wells (25 of 29) exhibiting a flat line trend below detection limits for several years. One (1) well (W-5D) exhibits low persistent levels of total DCE, three (3) wells exhibit fluctuating levels, and one (1) well exhibits an upward trend, possibly due to its downgradient proximity to documented DNAPL locations.

Since the OU3 MOM system began operations, the treatment system has substantially reduced VOC concentrations in overburden and modestly reduced VOC concentrations in bedrock, based upon the May 2007 groundwater data. Among the overburden wells only one, MW-6, had VOC concentrations exceeding MCLs. Among the bedrock wells, 8 wells (W-6D, MW-9B, JB, JS, MW-13B, MW-12B, MW-1B, and MW-11B) had VOC concentrations exceeding MCLs. There are no occurrences of regulated compounds above clean-up levels outside of the OU3 MOM extraction system capture zone. Also, there is only one well east of the Copicut River with a detection above an MCL (bedrock monitoring well W-6D, which exhibits a concentration of TCE of 5.4 ppb that is marginally above its applicable MCL of 5 ppb), and there are no wells with concentrations above MCLs south of Carol's Brook. The nearest downgradient residential dwelling from W-6D is situated approximately two thousand feet (2,000’) to the southeast.

Despite the presence of contaminants in some monitoring wells that are above MCLs, no evidence was encountered during this fourth five-year review to suggest that human exposure to contaminants through ingestion or inhalation of VOCs during household water use is occurring. Analytical results of drinking water samples that were collected from residential water wells in the vicinity of the Site did not show concentrations of VOCs above laboratory detection limits. Also, institutional controls appear to be effective in preventing the use of groundwater beneath the Site for any purpose. As discussed above, groundwater data collected from overburden monitoring wells between the site and off-site building had detection limits slightly higher than inhalation risk-based screening values (such as 0.55 µg/L for PCE and 0.50 µg/L for vinyl chloride). Additional samples should be collected from these monitoring wells with very low detection limits (below inhalation risk-based screening values) to further evaluate potential vapor risks and to confirm that groundwater does not pose a potential risk via vapor intrusion pathway.

Eliminate or minimize the threat posed to public health and the environment from the current and potential future extent of contaminant migration in groundwater and surface water. This objective was intended to restore the groundwater in both the overburden and bedrock aquifers beyond the WMA to drinking water standards. The GWTP was designed to remediate the dissolved phase VOC plume in the overburden aquifer while minimizing the mobility of DNAPL, encountered on the Site during implementation of the source control remedy.

Based on data collected over the first nine years of operation, it appears that the OU3 MOM groundwater extraction well network is controlling the migration of contaminated groundwater beyond the WMA. The GWTP is successfully treating dissolved phase VOCs in the overburden. While a complete review and evaluation of the hydrogeological assumptions is beyond the scope of the five-year review, a hydraulic capture assessment performed by the RPs in 2002 suggests that the GWTP is successfully capturing all groundwater that has been impacted by the Site (ENSR, 2002a). DNAPL delineation studies performed in 1993, 1999, and 2002 suggest that the DNAPL areas at the Site have not expanded or migrated significantly over the past fifteen years (ENSR, 2002a).

An environmental monitoring program, including collection of groundwater, surface water, residential well water, and fish samples, continues on a schedule approved by the agencies to

assess the effectiveness of the OU3 MOM remedy in meeting the ROD-specified RAOs. By restricting the migration of VOC contamination through the groundwater extraction system and treating dissolved phase contamination via the GWTP, the OU3 MOM remedy appears to be working towards achieving the objective of eliminating the threat to human health and the environment from groundwater and surface water.

***Maintain air quality at protective levels for on-site workers and the public during site remediation*.** The O&M staff are 40-hour health and safety trained and medically monitored under Occupational Safety and Health Administration (OSHA) Hazardous Waste Operations and Emergency Response Standard, and occupies the treatment plant building during regular business hours, five days per week. This represents the greatest potential risk for human exposure to hazardous air emissions. No evidence was encountered during the five-year review to suggest that harmful exposures are occurring in the treatment building. Air quality was monitored daily (using a photoionization detector) within the treatment building for the first month of operations and was determined to be satisfactory. Since then, real-time monitoring of air inside the treatment building occurs only during maintenance events for which air monitoring is required (i.e. confined space entry). The O&M contractor indicated that this occurs approximately twice yearly, and indoor air quality has never triggered any concern.

7.3 Question C: Has Any Other Information Come to Light that Could Call into Question the Protectiveness of the Remedy?

No. No new information has become available that could impact the protectiveness of the remedy. The new risk assessment indicating a risk at the North Access Road Area has already been discussed (see Section 7.2 and Appendix D).

7.4 Technical Assessment Summary

The OU1 and OU2 source control remedies successfully removed PCB-contaminated soils and sediments above action levels, as documented in the September 1987 USACE Final Report, February 1996 OU2 Source Control Remedial Action Report and August 1998 Preliminary Close Out Report. Institutional controls (see Section 4.3) prevent building construction, groundwater extraction, excavation beyond six inches deep, and residential development at the original Re-Solve, Inc., property.

As part of the OU2 source control remedy, PCB-contaminated soils were also removed from the North Access Road Area and covered with an 18-inch gravel cap. However, some soils contaminated with PCBs were detected in post-excavation confirmatory sampling, and future residential risks to contaminated soils under the gravel cap were evaluated at the North Access Road Area (See Appendix D). Results of these calculations indicate a potential for adverse non-cancer health effects for future residents at the North Access Road Area. The current conditions at the North Access Road Area are considered protective in the short term due to the presence of the gravel cap. A barbed-wire fence also separates the nearest residential dwelling from the access road.

Based on a trend analysis of influent contaminant levels performed by the RPs, the OU3 MOM remedy appears to be generally decreasing the concentration of dissolved VOCs in groundwater located within the environmental monitoring well network. Semiannual groundwater monitoring results have shown that contaminant concentrations observed in approximately half of the wells (22 of 46) monitored have decreased since startup of the remedy. Fifteen wells have shown contaminant concentrations below detection limits for the entire monitoring program. Of the remaining wells, one well exhibited a persistent low level of total DCE, three exhibited fluctuating concentrations that are at or above cleanup levels and only one exhibited a significant upward trend, due to its downgradient proximity to documented DNAPL locations.

Fluctuating contaminant levels that have been observed at several monitoring wells suggest that a continuing source of DNAPL exists in groundwater beneath the Site. One of the objectives of the OU3 MOM remedial design is to prevent the migration of DNAPL. DNAPL delineation studies performed in 1993, 1999, and 2002 suggest that the OU3 MOM remedy has been effective in limiting the mobility of DNAPL in both the bedrock and overburden aquifers (TtNUS, 2003).

A reduction in dissolved VOC concentrations in groundwater and effective capture of the groundwater plume by the extraction system also appears to have reduced the discharge of contaminants to the Copicut River. No detectable concentrations of VOCs were found in surface water quality samples collected in August 2006. No detectable concentrations of indicator contaminants were found in the eight (8) residential wells sampled during the May 2006 sampling event and the one well sampled during the August 2006 sampling event. A

decrease in contaminant concentrations in fish tissue sampled as part of the environmental monitoring program since the Remedial Investigation also supports the conclusion that the remedy is helping to improve environmental conditions in surface water bodies that have been negatively impacted by Site contamination.

An analysis of capture zones through groundwater flow modeling performed by the RPs has suggested that maintenance of a minimum monthly average pumping rate of 45 gpm should ensure capture of the entire contaminant plume. A review of historical monthly average pumping rates from each of the eight extraction wells suggests that the contaminant plume has been, and should continue to be, adequately contained by the extraction system, as currently constituted. Groundwater and surface water level monitoring performed during operation of the GWTP indicates that a 45 gpm system flow rate does not negatively impact the wetland restoration effort. Observations made during the Site inspection support this fact. Wetlands in both the northern and eastern portion of the Site appear adequately reestablished following the restoration performed during the source control remedy (TtNUS, 2003).

A full-time O&M technician is on-site to monitor the performance of the GWTP and anticipate complications that may compromise the performance of the system. A preventative maintenance schedule has been established, and the O&M contractor has demonstrated the ability to deal effectively and expeditiously with non-routine maintenance issues. O&M costs have generally fallen in line with projections that were made during the 60% design phase of the project.

The exposure pathways and land use assumptions that were stated in the ROD are still valid. A new development is under construction up-gradient and south west of the Site. However, this change in land use is consistent with prior zoning and the assumptions of the ROD. Institutional controls appear to be effective in preventing access to the original Re-Solve, Inc. property and use of the Site's groundwater, as well as preventing building construction, groundwater extraction, and excavation beyond six inches deep and residential development.

The vapor intrusion pathway is not likely a concern at or beyond the Re-Solve Superfund Site. However, groundwater data with very low detection limits has not been collected from overburden monitoring wells between site and off-site buildings to conclusively demonstrate groundwater concentrations below the inhalation risk-based screening values (i.e. PCE – 0.55

µg/L, and vinyl chloride – 0.50 µg/L). Therefore, additional shallow groundwater data should be collected from these wells using detection limits below risk-based screening values, to further evaluate possible vapor risk and confirm that groundwater does not pose a potential risk via vapor intrusion pathway.

In summary, the GWTP appears to be effective in capturing and treating the dissolved phase VOC plume and minimizing the mobility of DNAPL, all of which appears to be improving the quality of surface water, groundwater, and fish tissue sampled downgradient of the Site. The system is able to do this at a flow rate that does not compromise the restored wetlands by lowering groundwater and surface water levels, and for a cost that falls within a reasonable range of projections. However, additional shallow groundwater data with very low detection limits should be collected from shallow overburden monitoring wells between the site and off-site buildings to further evaluate possible vapor risk and confirm that groundwater does not pose a potential risk via vapor intrusion pathway.

Based on the data reviewed, observations from the Site inspection, and the interviews conducted, the OU3 MOM remedy is functioning as intended by the ROD and as designed and remains protective of human health and the environment. The OU2 source control remedy is also functioning as intended by the ROD. As noted above, a new risk assessment (Appendix D) that there is a potential for adverse non-cancer health effects for future residents at the North Access Road Area. However, current conditions at the North Access Road Area are considered protective in the short term due to the presence of the 18-inch gravel cap. To ensure long-term protectiveness, additional measures to address PCB-contaminated soils should be evaluated, including deed restrictions that prohibit residential and other high-occupancy uses of the relevant parts of the Site, and also deed restrictions that would require maintenance of the layers of uncontaminated soil or gravel cap over the remaining contaminated soil.

8.0 ISSUES

The following three issues were identified during this fourth five-year review.

- Lower Groundwater Detection Limits/ Further Vapor Intrusion Screening. As noted in Section 7.2, the vapor intrusion pathway is not likely a concern at or beyond the Re-Solve Superfund Site. However, groundwater data with very low detection limits have not been collected from overburden monitoring wells between site and off-site buildings

to conclusively demonstrate groundwater concentrations below the inhalation risk-based screening values (i.e. PCE – 0.55 µg/L, and vinyl chloride – 0.50 µg/L). Therefore, additional shallow groundwater data should be collected from these wells using detection limits below risk-based screening values, to further evaluate possible vapor risk and confirm that groundwater does not pose a potential risk via vapor intrusion pathway.

- Site Signage. Some of the Site signage is missing or deteriorated and should be replaced. A comprehensive assessment should be conducted and signs installed.

- North Access Road Area/New Risk Assessment Results. Future risks to residents at North Access Road Area and South Gap Area were not previously evaluated. The calculations provided in Appendix D indicate future potential non-cancer adverse health effect at North Access Road Area. Currently, the North Access Road Area is considered protective in the short term due to the presence of the 18-inch gravel cap.

9.0 RECOMMENDATIONS AND FOLLOW-UP ACTIONS

In order for the OU3 MOM remedy to be deemed protective in the long term, it is recommended that groundwater data be collected using very low detection limits (below inhalation risk-based screening values i.e. PCE – 0.55 µg/L, vinyl chloride – 0.50 µg/L) from overburden monitoring wells between the site and off-site buildings to further evaluate potential vapor risks and confirm that groundwater does not pose a potential risk via vapor intrusion pathway.

A survey of signage at the site should be conducted and any missing or damaged signs should be replaced.

Based on the risk calculations provided in Appendix D, additional measures to address PCB-contaminated soils should be evaluated to ensure long-term protectiveness, including deed restrictions that prohibit residential and other high-occupancy uses of the relevant parts of the Site, and also deed restrictions that would require maintenance of the layers of uncontaminated soil or gravel cap over the remaining contaminated soil.

Table 9-1
Recommendations/Follow-up Actions
Re-Solve, Inc. Superfund Site
North Dartmouth, Massachusetts

Recommendations/ Follow-up Actions	Party Responsible	Oversight Agency	Milestone Date	Follow-up Actions: Affects Protectiveness (Y/N)	
				Current	Future
Collect groundwater data with detection limits below inhalation risk-based screening levels to further evaluate potential vapor risks and confirm groundwater does not pose a potential off-site risk via vapor intrusion pathway.	RPs	EPA	September, 2009	Y	Y
Conduct a survey of signage at the site and replace any missing or damaged signs.	RPs	EPA	September, 2009	Y	Y
Additional measures to address PCB-contaminated soils should be evaluated, including deed restrictions that prohibit future residential and other high-occupancy uses of the relevant parts of the Site, and also deed restrictions that would require maintenance of the layers of uncontaminated soil or gravel cap over the remaining contaminated soil.	RPs	EPA	September, 2009	N	Y

10.0 PROTECTIVENESS STATEMENTS

The OU3 MOM remedy for the Site is currently protective of human health and the environment, and exposure pathways that could result in unacceptable risks from exposure to groundwater are being controlled through institutional controls and the groundwater extraction system.

The OU1 and OU2 source control remedies were declared complete by EPA in 1987 and 1996, respectively, and judged protective by EPA in the 1998 five-year review (OU1 was terminated and superseded by OU2). Institutional controls prevent building construction, groundwater extraction, excavation beyond six inches deep, and residential development at the original Re-Solve, Inc. property (which includes the WMA, but excludes the North Access Road Area and South Gap Area). Information encountered during this review indicates a potential for adverse

non-cancer health effects for future residents to PCB soil at the North Access Road Area. However, current conditions are considered protective of residents in the short term due to the presence of an 18-inch gravel cap over the area. To ensure long-term protectiveness, additional measures to address PCB-contaminated soils should be evaluated, including deed restrictions that prohibit residential and other high-occupancy uses of the relevant parts of the Site, and also deed restrictions that would require maintenance of the layers of uncontaminated soil or gravel cap over the remaining contaminated soil.

The Site as a whole is considered currently protective of human health and environment in the short term; however, the OU2 source control remedy is not considered protective in the long-term without the additional measures discussed above.

11.0 NEXT REVIEW

The fifth five-year review for the Site will be conducted in 2013 since contaminants remain at the Site above levels that allow for unrestricted use of the property.

FIGURES

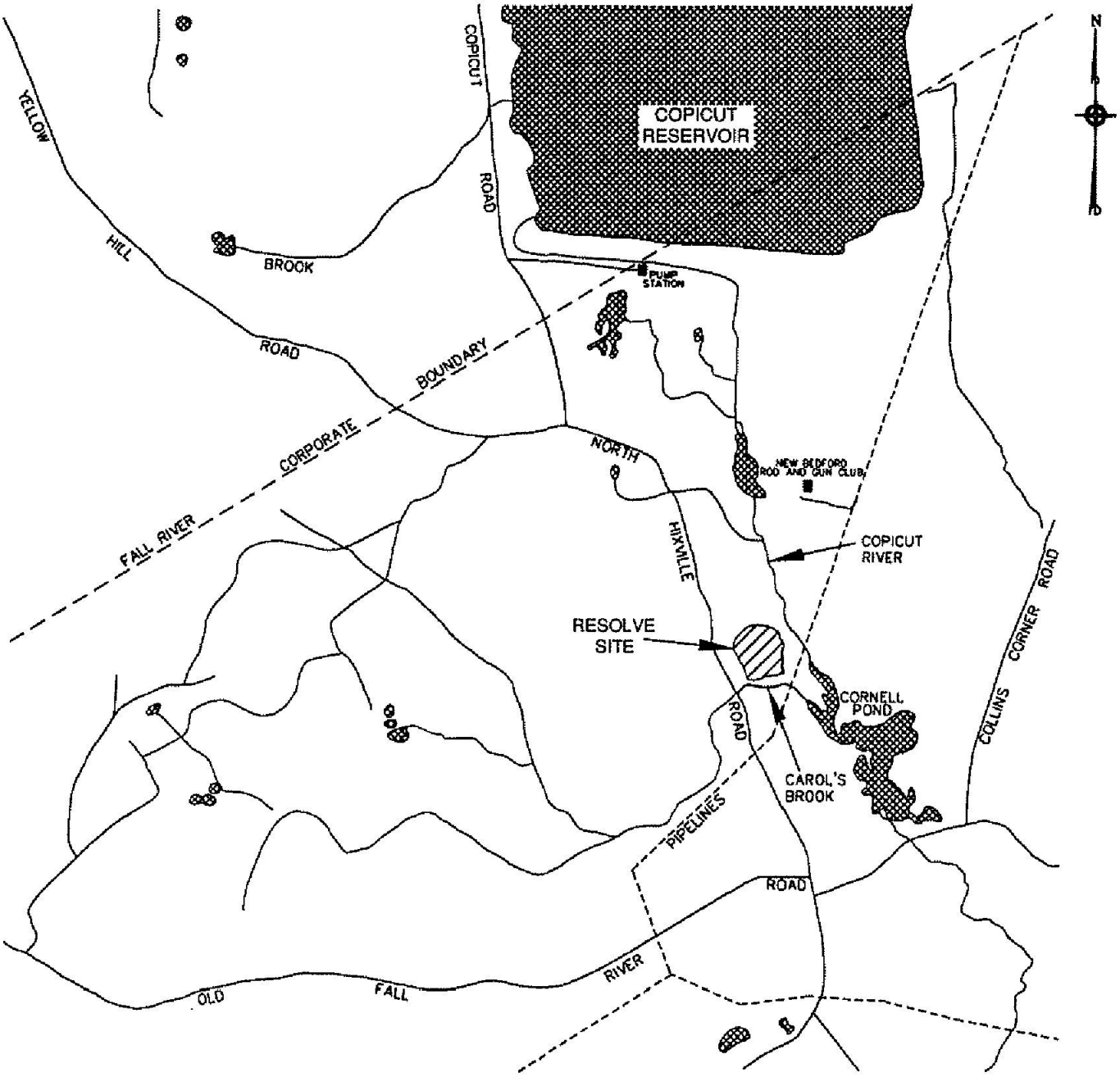

NOTES:
1. DRAWING NOT TO SCALE.
2. LOCATIONS ARE APPROXIMATE.

Nobis Engineering, Inc.
439 South Union Street
Building 2, Suite 207
Lawrence, MA 01843-2800
Tel (978) 683-0891
Fax (978) 683-0966
www.nobisengineering.com

FIGURE 3-1

SITE LOCATION MAP
RE-SOLVE, INC.
FIVE-YEAR REVIEW REPORT
NORTH DARTMOUTH, MASSACHUSETTS

DRAWN BY:	CEL	APPROVED BY:	MAB
PROJECT:	80031.06	JUNE 2008	

J:\80000 EPA RAC2 Region 1\80000 Task Orders\80031 Re-Solve FYR\Reports (RP)\Draft Five Year Review 2008\80031-FIGURES.dwg

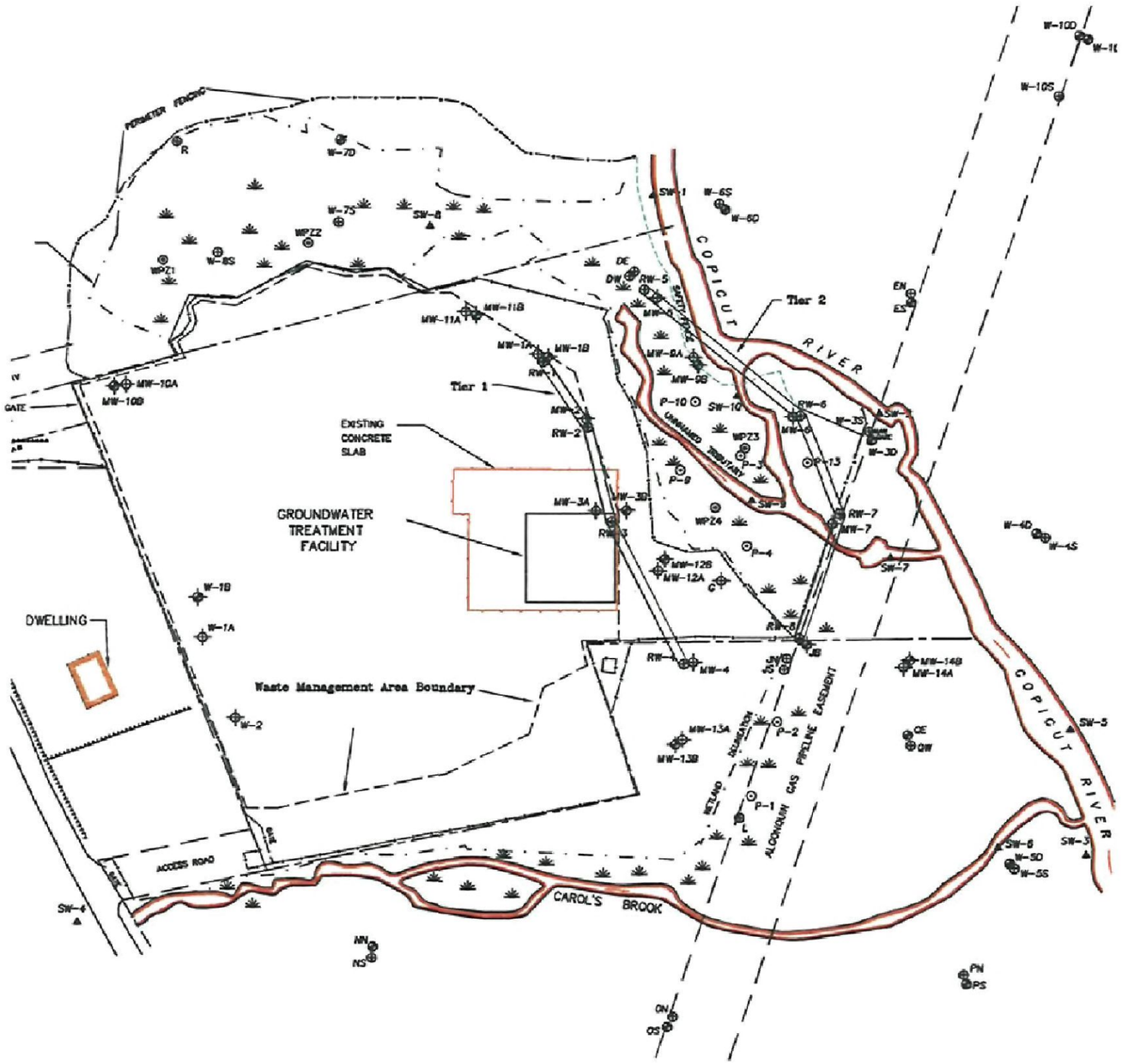

LEGEND

- EXTRACTION WELL
- EXISTING FENCE LINE
- UTILITY EASEMENT
- UTILITY EASEMENT
- WETLAND DELINEATION
- MW-1B — BEDROCK MONITORING WELL (INSTALLED BY WESTON)
- MW-1A — OVERBURDEN MONITORING WELL (INSTALLED BY WESTON)
- W-3D — BEDROCK MONITORING WELL (INSTALLED BY OTHERS)
- W-3S — OVERBURDEN MONITORING WELL (INSTALLED BY OTHERS)
- SW-1 — SURFACE WATER STATION
- P-1 — WETLAND PIEZOMETER (INSTALLED BY WESTON)
- WPZ1 — WETLAND PIEZOMETER (INSTALLED BY OTHERS)
- RW-1 — GROUNDWATER EXTRACTION WELL (INSTALLED BY WESTON)

GRAPHIC SCALE

0' 120' 240'

1 INCH = 120 FEET

NOTES:
1. LOCATIONS ARE APPROXIMATE.
2. BASEMAP DEVELOPED FROM PLAN ENTITLED "BASE MAP", WESTON, OCTOBER 1997.

Nobis Engineering, Inc.
439 South Union Street
Building 2, Suite 207
Lawrence, MA 01843-2800
Tel (978) 683-0891
Fax (978) 683-0966
www.nobisengineering.com

FIGURE 4-1

GROUNDWATER EXTRACTION WELLS
RE-SOLVE, INC.
FIVE-YEAR REVIEW REPORT
NORTH DARTMOUTH, MASSACHUSETTS

DRAWN BY:	CEL	APPROVED BY:	MAB
PROJECT:	80031.06	JUNE 2008	

J:\80000 EPA RAC2 Region 1\80000 Task Orders\80031 Re-Solve FYR\Reports (RP)\Draft Five Year Review 2008\80031-FIGURES.dwg

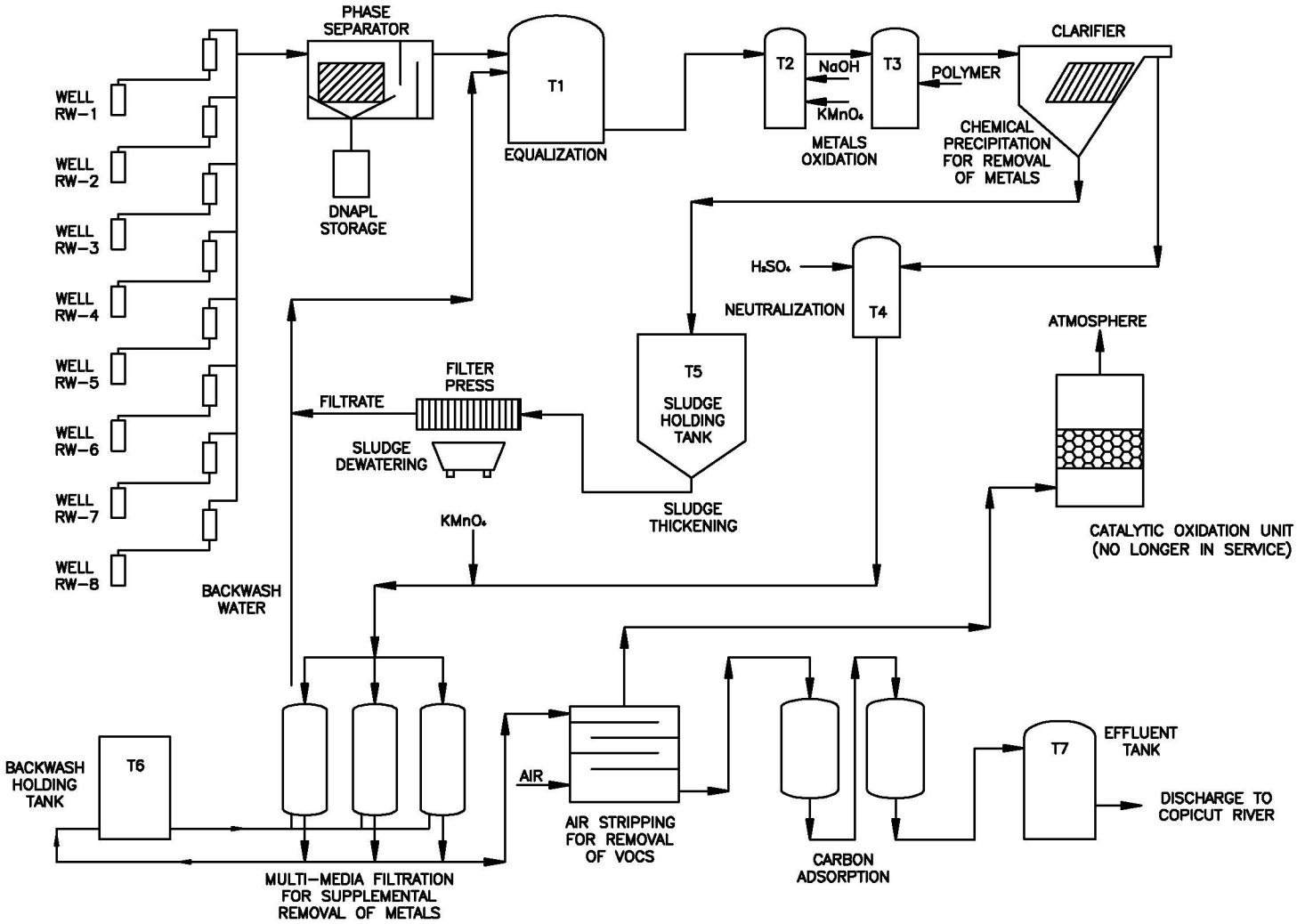

FIGURE 4-2

GROUNDWATER TREATMENT SYSTEM
RE-SOLVE, INC.
FIVE-YEAR REVIEW REPORT
NORTH DARTMOUTH, MASSACHUSETTS

DRAWN BY:	CEL	APPROVED BY:	MAB
PROJECT:	80031.06		JUNE 2008

Nobis Engineering, Inc.
439 South Union Street
Building 2, Suite 207
Lawrence, MA 01843-2800
Tel (978) 683-0891
Fax (978) 683-0966
www.nobisengineering.com

J:\80000 EPA RAC2 Region 1\80000 Task Orders\80031 Re-Solve FYR\Reports (RP)\Draft Five Year Review 2008\80031-FIGURES.dwg

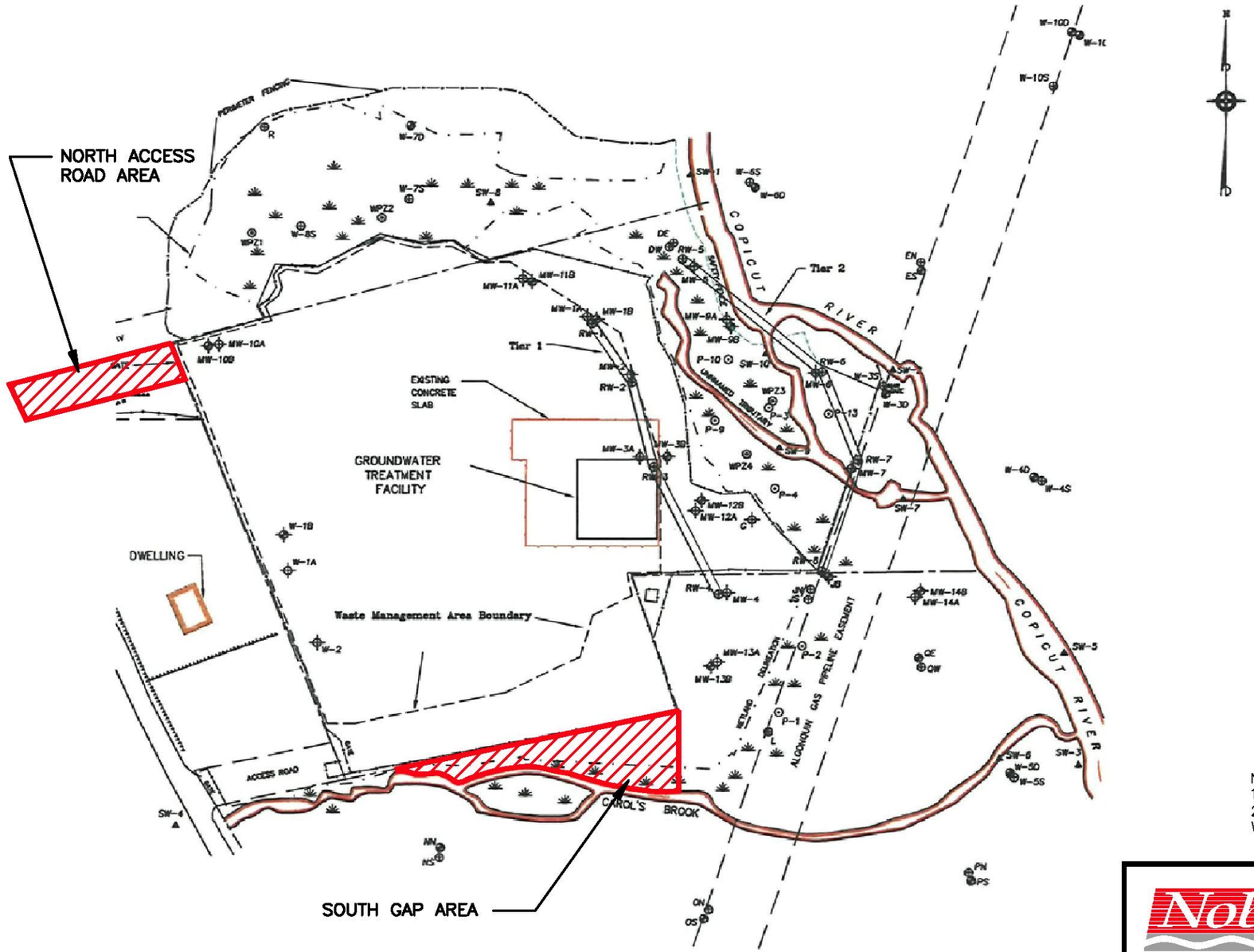

NOTES:
1. LOCATIONS ARE APPROXIMATE.
2. BASEMAP DEVELOPED FROM PLAN ENTITLED "BASE MAP", WESTON, OCTOBER 1997.

Nobis Engineering, Inc.
439 South Union Street
Building 2, Suite 207
Lawrence, MA 01843-2800
Tel (978) 683-0891
Fax (978) 683-0966
www.nobisengineering.com

FIGURE 7-1

NORTH ACCESS ROAD AND SOUTH GAP AREAS

RE-SOLVE, INC.
FIVE-YEAR REVIEW REPORT
NORTH DARTMOUTH, MASSACHUSETTS

DRAWN BY:	CEL	APPROVED BY:	MAB
PROJECT:	80031.06		SEPTEMBER 2008

J:\80000 EPA RAC2 Region 1\80000 Task Orders\80031 Re-Solve FYR\Reports (RP)\Draft Five Year Review 2008\Figures\80031-FIGURES.dwg

APPENDIX A

DOCUMENT REVIEW LIST/REFERENCES

DOCUMENTS REVIEWED/REFERENCES CITED

Camp Dresser & McKee, 1983. *Final Remedial Investigation and Feasibility Study*. Camp Dresser & McKee. June 30, 1983.

Camp Dresser & McKee, 1987. *Draft Off-Site Remedial Investigation.* Camp Dresser & McKee. January 1987.

Camp Dresser & McKee, 1987a. *Draft Off-Site Remedial Investigation Supplement.* Camp Dresser & McKee. February 1987.

Camp Dresser & McKee, 1987b. *Draft Off-Site Feasibility Study.* Camp Dresser & McKee. June 1987.

Charbonnier, 2002. Email correspondence regarding pH monitoring following carbon changeout, between Joe Charbonnier, ENSR and Phoebe Call, TtNUS. October 16, 2002.

Charbonnier, 2003a. Email correspondence regarding DNAPL wellpoint between Joe Charbonnier, ENSR and Phoebe Call, TtNUS. September 9, 2003.

ENSR, 1999. MOM Remedial Action First Year Operations Report. ENSR. December 29, 1999.

ENSR, 2001a. Second Year Operations Report Management of Migration Remedial Action. ENSR International. February 19, 2001.

ENSR, 2001b. Third Year Operations Report Management of Migration Remedial Action. ENSR International. December, 2001.

ENSR, 2002a. Review of the Management of Migration Remedial Action. ENSR International. December 2002.

ENSR, 2002b. Fourth Year Operations Report Managemetn of Migration Remedial Action. ENSR International. December 2002.

ENSR, 2003. Fifth Year Operations Report Management of Migration Remedial Action. ENSR International. July 2003.

ENSR, 2004. Letter Correspondence: *Response to EPA's Five-Year Review Report, dated September 2003.* Joseph Charbonnier and Michael Worthy. March 4, 2004

ENSR, 2004a. Sixth Year Operations Report Management of Migration Remedial Action. ENSR International. August 2004.

ENSR, 2005. *Final Report Catalytic Oxidizer Study*. ENSR Corporation. June 2005.

ENSR, 2005a. Seventh Year Operations Report Management of Migration Remedial Action. ENSR International. November 2005.

ENSR 2006. Eighth Year Operations Report Management of Migration Remedial Action. ENSR Corporation. October 2006.

ENSR, 2007. Ninth Year Operations Report Management of Migration Remedial Action. ENSR Corporation. October 2007.

EPA, 1987. *Record of Decision Summary.* U.S. Environmental Protection Agency. September 24, 1987.

EPA, 1989. *Consent Decree*. U.S. Environmental Protection Agency. February 8, 1989.

EPA, 1993. *Scope of Work for Remedial Design and Remedial Action at ReSolve, Inc, Superfund Site* (Appendix 2, filed with the Explanation of Significant Differences). U.S. Environmental Protection Agency. June 11, 1993.

EPA, 2001. Comprehensive Five-year Review Guidance, OSWER Directive 9355.7-03B-P, June 2001.

EPA, 2002a. *National Recommended Water Quality Criteria: 2002*. EPA-822-R-02-047. November 2002.

EPA, 2002b. OSWER Draft Guidance for Evaluating the Vapor Intrusion to Indoor Air Pathway from Groundwater and Soils. EPA530-D-02-004. November 2002.

EPA, 2003. "U.S. Enters into Settlement for Re-Solve, Inc. Superfund Site." Press Release from U.S. Environmental Protection Agency, Region I.

EPA, 2006. National Recommended Water Quality Criteria, EPA Office of Water. 2006.

EPA Region 1, 2008. U.S. EPA Region 1 communication from R. Sugatt.

HNUS, 1993. *Five-Year Review Report.* Halliburton NUS Corporation. June 1993.

HNUS, 1996. *Final Remedial Action Report, Source Control Remedial Action*. Halliburton NUS Corporation. February 1996.

Last, 2008. 221st Progress Report. Michael P. Last, Counsellor at Law. April 3, 2008.

M&E, 1994. *Intermediate (60%) Design Report.* Metcalf & Eddy, July 1994.

M&E, 1996. *MOM RO Implementation Plan*. Metcalf & Eddy, March 1996.

Symmes, 2008. Email correspondence regarding Re-Solve MOM O&M costs, between Fred Symmes, Weston and Marc Bouvier, Nobis. June 24, 2008.

TtNUS, 1998. Final Preliminary Closeout Report, Management of Migration. Tetra Tech NUS, Inc. 1998.

TtNUS, 1998. *Five-year Review Report.* Tetra Tech NUS, Inc. September 1998.

TtNUS, 1999. Final Remedial Action Report, Management of Migration Remedial Action. Tetra Tech NUS, Inc. May 1999.

TtNUS, 2003. *Five-year Review Report*. Tetra Tech NUS, Inc. September 2003.

Watermark, 2008. Letter correspondence regarding environmental benefits of discontinuing use of the catalytic oxidation unit from Michael Worthy to Joseph LeMay. May 6, 2008.

Weston, 2003a. Wetland Assessment Report, July 2002. Weston Solutions, Inc. April 25, 2003.

Weston, 2003b. Wetland Assessment Report, September 2002. Weston Solutions, Inc. April 25, 2003.

APPENDIX B

SITE INSPECTION REPORT AND PHOTOS

Re-Solve, Inc. Site Inspection

Photographic Record

Re-Solve, Inc. Site Inspection – May 29, 2008
Five-Year Review, Task Order No. 0031-FR-FE-0118

Attendees:

James Saylors – Weston Solutions, O&M Contractor
Mike Worthy – Watermark, RP Contractor
Mike O'Reilly – Town of Dartmouth, Environmental Affairs Coordinator
Fred Symmes – Weston Solutions, PM for RP
Marc Bouvier – Nobis Engineering, Inc.
Courtney LaVolpicelo – Nobis Engineering, Inc.

The site inspection was completed on May 29, 2008. Nobis on Site at 10:00 am. J. Saylors provided a health and safety briefing. Nobis confirmed that current health and safety plan, applicable MSDS', current O&M manual, and updated maintenance logs are located on-site and are readily available.

F. Symmes provided Nobis with a tour of the Site, including both tiers of extraction wells, the DNAPL well point, the Algonquin Gas Pipeline Right-of-Way, the GWTP discharge point, the grass/wildflower meadow, the BFP system, the outside storage area, and restored wetland areas. He also provided an extensive tour of the GWTP demonstrating the process of treatment as well as O&M procedures. He also demonstrated the computer system that is used to monitor treatment.

The removal of the catalytic oxidation unit was discussed and M. Worthy provided information regarding the environmental benefits of discontinuing use of the unit.

Nobis left the Site about 12:30 pm and drove through the neighborhood to view abutting properties and new developments in the vicinity. Nobis also visited the nearby subdivision under construction on North Hixville Road. The subdivision is proposed for ten lots, however only one home had been constructed at the time of the visit. The subdivision is upgradient from the Site.

Prior to the site inspection, Nobis conducted phone conversations with several Town employees (Lynn Medeiros, Town Clerk and Wendy Henderson, Director of Public Health) regarding various Town and Site information.

Site Inspection Checklist

I. SITE INFORMATION	
Site name: Re-Solve, Inc. Superfund Site	**Date of inspection: May 29, 2008**
Location and Region: N. Dartmouth, MA/Region 1	**EPA ID: MAD980520621**
Agency, office, or company leading the five-year review: EPA/Nobis Engineering, Inc.	**Weather/temperature: clear and sunny, approx. 70°F**

Remedy Includes: (Check all that apply)

- ☐ Landfill cover/containment
- ☐ Access controls
- ☒ Institutional controls
- ☒ Groundwater pump and treatment
- ☐ Surface water collection and treatment
- ☐ Other_____
- ☐ Monitored natural attenuation
- ☒ Groundwater containment
- ☐ Vertical barrier walls

Attachments: ☐ Inspection team roster attached ☐ Site map attached

II. INTERVIEWS (Check all that apply)

1. **O&M site manager** James Saylors (Name) Operator (Title) 5/29/08 (Date)
   Interviewed ☒ at site ☐ at office ☐ by phone Phone no. _____
   Problems, suggestions; ☐ Report attached _____

2. **O&M staff** Fred Symmes (Name) Project Manager (Title) 5/29/08 (Date)
   Interviewed ☒ at site ☐ at office ☐ by phone Phone no. _____
   Problems, suggestions; ☐ Report attached _____

3. **Local regulatory authorities and response agencies** (i.e., State and Tribal offices, emergency response office, police department, office of public health or environmental health, zoning office, recorder of deeds, or other city and county offices, etc.) Fill in all that apply.

Agency _____
Contact _____ _____ _____ _____
Name Title Date Phone no.
Problems; suggestions; ☐ Report attached _____
_____

Agency _____
Contact _____ _____ _____ _____
Name Title Date Phone no.
Problems; suggestions; ☐ Report attached _____
_____

Agency _____
Contact _____ _____ _____ _____
Name Title Date Phone no.
Problems; suggestions; ☐ Report attached _____
_____

Agency _____
Contact _____ _____ _____ _____
Name Title Date Phone no.
Problems; suggestions; ☐ Report attached _____
_____

4. **Other interviews** (optional) ☐ Report attached.

III. ON-SITE DOCUMENTS & RECORDS VERIFIED (Check all that apply)

1. **O&M Documents**

☒ O&M manual	☒ Readily available	☒ Up to date	☐ N/A
☐ As-built drawings	☐ Readily available	☐ Up to date	☐ N/A
☒ Maintenance logs	☒ Readily available	☒ Up to date	☐ N/A

Remarks_____

2. **Site-Specific Health and Safety Plan** ☒ Readily available ☒ Up to date ☐ N/A

☒ Contingency plan/emergency response plan	☒ Readily available	☒ Up to date	☐ N/A

Remarks_____

3. **O&M and OSHA Training Records** ☒ Readily available ☒ Up to date ☐ N/A

Remarks_____

4. **Permits and Service Agreements**

☐ Air discharge permit	☐ Readily available	☐ Up to date	☒ N/A
☐ Effluent discharge	☐ Readily available	☐ Up to date	☒ N/A
☐ Waste disposal, POTW	☐ Readily available	☐ Up to date	☒ N/A
☐ Other permits_____	☐ Readily available	☐ Up to date	☐ N/A

Remarks_____

5. **Gas Generation Records** ☐ Readily available ☐ Up to date ☒ N/A

Remarks_____

6. **Settlement Monument Records** ☐ Readily available ☐ Up to date ☒ N/A

Remarks_____

7. **Groundwater Monitoring Records** ☒ Readily available ☒ Up to date ☐ N/A

Remarks_____

8. **Leachate Extraction Records** ☐ Readily available ☐ Up to date ☒ N/A

Remarks_____

9. **Discharge Compliance Records**

☐ Air	☐ Readily available	☐ Up to date	☐ N/A
☒ Water (effluent)	☒ Readily available	☒ Up to date	☐ N/A

Remarks_____

10. **Daily Access/Security Logs** ☒ Readily available ☒ Up to date ☐ N/A

Remarks_____

IV. O&M COSTS

1. **O&M Organization**

☐ State in-house ☐ Contractor for State
☐ PRP in-house ☒ Contractor for PRP
☐ Federal Facility in-house ☐ Contractor for Federal Facility
☐ Other_____

2. **O&M Cost Records**

☒ Readily available ☒ Up to date
☒ Funding mechanism/agreement in place
Original O&M cost estimate___See Report Section 7.1.3____ ☐ Breakdown attached

Total annual cost by year for review period if available

From_____ To_____ _____ ☐ Breakdown attached
Date Date Total cost
From_____ To_____ _____ ☐ Breakdown attached
Date Date Total cost
From_____ To_____ _____ ☐ Breakdown attached
Date Date Total cost
From_____ To_____ _____ ☐ Breakdown attached
Date Date Total cost
From_____ To_____ _____ ☐ Breakdown attached
Date Date Total cost

3. **Unanticipated or Unusually High O&M Costs During Review Period**

Describe costs and reasons: __See Report Section 7.1.3_____

V. ACCESS AND INSTITUTIONAL CONTROLS ☒ Applicable ☐ N/A

A. Fencing

1. **Fencing damaged** ☐ Location shown on site map ☒ Gates secured ☐ N/A

Remarks_All fencing and gate in good condition_____

B. Other Access Restrictions

1. **Signs and other security measures** ☐ Location shown on site map ☐ N/A

Remarks_Signs posted and visible, some need minor repairs or replacement_____

C. Institutional Controls (ICs)

1. **Implementation and enforcement**

Site conditions imply ICs not properly implemented ☐ Yes ☒ No ☐ N/A
Site conditions imply ICs not being fully enforced ☐ Yes ☒ No ☐ N/A

Type of monitoring (*e.g.*, self-reporting, drive by) self-reporting by on-site personnel, security cameras
Frequency daily
Responsible party/agency Weston Solutions, RP Contractor
Contact James Saylors Operator _____ _____
Name Title Date Phone no.

Reporting is up-to-date ☒ Yes ☐ No ☐ N/A
Reports are verified by the lead agency ☒ Yes ☐ No ☐ N/A

Specific requirements in deed or decision documents have been met ☒ Yes ☐ No ☐ N/A
Violations have been reported ☒ Yes ☐ No ☐ N/A
Other problems or suggestions: ☐ Report attached
No incidents have occurred on-site since implementation of MOM

2. **Adequacy** ☒ ICs are adequate ☐ ICs are inadequate ☐ N/A
Remarks

D. General

1. **Vandalism/trespassing** ☐ Location shown on site map ☒ No vandalism evident
Remarks

2. **Land use changes on site** ☒ N/A
Remarks

3. **Land use changes off site** ☐ N/A
Remarks residential development under construction across street, up-gradient of Site

VI. GENERAL SITE CONDITIONS

A. Roads ☒ Applicable ☐ N/A

1. **Roads damaged** ☐ Location shown on site map ☒ Roads adequate ☐ N/A
Remarks

B. Other Site Conditions

Remarks _____

VII. LANDFILL COVERS ☐ Applicable ☒ N/A

VIII. VERTICAL BARRIER WALLS ☐ Applicable ☒ N/A

IX. GROUNDWATER/SURFACE WATER REMEDIES ☒ Applicable ☐ N/A

A. Groundwater Extraction Wells, Pumps, and Pipelines ☒ Applicable ☐ N/A

1. Pumps, Wellhead Plumbing, and Electrical

☒ Good condition ☒ All required wells properly operating ☐ Needs Maintenance ☐ N/A

Remarks Continuous monitoring by O&M Contractor, RW wells secured by locks and alarms

2. Extraction System Pipelines, Valves, Valve Boxes, and Other Appurtenances

☒ Good condition ☐ Needs Maintenance

Remarks Continuous monitoring by O&M Contractor

3. Spare Parts and Equipment

☒ Readily available ☒ Good condition ☐ Requires upgrade ☐ Needs to be provided

Remarks _____

B. Surface Water Collection Structures, Pumps, and Pipelines ☐ Applicable ☒ N/A

1. Collection Structures, Pumps, and Electrical

☐ Good condition ☐ Needs Maintenance

Remarks _____

2. Surface Water Collection System Pipelines, Valves, Valve Boxes, and Other Appurtenances

☐ Good condition ☐ Needs Maintenance

Remarks _____

3. Spare Parts and Equipment

G☐ Readily available ☐ Good condition ☐ Requires upgrade ☐ Needs to be provided

Remarks _____

C. Treatment System ☒ Applicable ☐ N/A

1. **Treatment Train** (Check components that apply)
   ☒ Metals removal ☐ Oil/water separation ☐ Bioremediation
   ☒ Air stripping ☒ Carbon adsorbers
   ☒ Filters multi-media filters
   ☒ Additive (*e.g.*, chelation agent, flocculent) anionic polymer
   ☐ Others
   ☒ Good condition ☐ Needs Maintenance
   ☒ Sampling ports properly marked and functional
   ☒ Sampling/maintenance log displayed and up to date
   ☒ Equipment properly identified
   ☐ Quantity of groundwater treated annually
   ☐ Quantity of surface water treated annually
   Remarks

2. **Electrical Enclosures and Panels** (properly rated and functional)
   ☐ N/A ☒ Good condition ☐ Needs Maintenance
   Remarks

3. **Tanks, Vaults, Storage Vessels**
   ☐ N/A ☒ Good condition ☐ Proper secondary containment ☐ Needs Maintenance
   Remarks

4. **Discharge Structure and Appurtenances**
   ☐ N/A ☐ Good condition ☐ Needs Maintenance
   Remarks Could not directly observe discharge point due to high water elevation at time of inspection.

5. **Treatment Building(s)**
   ☐ N/A ☒ Good condition (esp. roof and doorways) ☐ Needs repair
   ☒ Chemicals and equipment properly stored
   Remarks

6. **Monitoring Wells** (pump and treatment remedy)
   ☒ Properly secured/locked ☒ Functioning ☒ Routinely sampled ☒ Good condition
   ☐ All required wells located ☐ Needs Maintenance ☐ N/A
   Remarks

D. Monitoring Data

1. Monitoring Data
   ☒ Is routinely submitted on time ☒ Is of acceptable quality

2. Monitoring data suggests:
   ☒ Groundwater plume is effectively contained ☒ Contaminant concentrations are declining

D. Monitored Natural Attenuation

1. **Monitoring Wells** (natural attenuation remedy)

☐ Properly secured/locked ☐ Functioning ☐ Routinely sampled ☐ Good condition
☐ All required wells located ☐ Needs Maintenance ☒ N/A

Remarks_____

X. OTHER REMEDIES

If there are remedies applied at the site which are not covered above, attach an inspection sheet describing the physical nature and condition of any facility associated with the remedy. An example would be soil vapor extraction.

XI. OVERALL OBSERVATIONS

A. Implementation of the Remedy

Describe issues and observations relating to whether the remedy is effective and functioning as designed. Begin with a brief statement of what the remedy is to accomplish (i.e., to contain contaminant plume, minimize infiltration and gas emission, etc.).

See Report

B. Adequacy of O&M

Describe issues and observations related to the implementation and scope of O&M procedures. In particular, discuss their relationship to the current and long-term protectiveness of the remedy.

See Report Section 7.1.3

C.	Early Indicators of Potential Remedy Problems
	Describe issues and observations such as unexpected changes in the cost or scope of O&M or a high frequency of unscheduled repairs, that suggest that the protectiveness of the remedy may be compromised in the future. None

D.	Opportunities for Optimization
	Describe possible opportunities for optimization in monitoring tasks or the operation of the remedy. See Report Section 7.1.4

Re-Solve, Inc. Site Inspection

Photographic Record

Photo Number: 1 - Groundwater Treatment Plant, facing north. Date: May 29, 2008

Photo Number: 2 - Enclosure for RW-4. Date: May 29, 2008

Re-Solve, Inc. Site Inspection

Photographic Record

Photo Number: 3 - Algonquin Gas Pipeline Right-of-Way. Date: May 29, 2008

Photo Number: 4 - RW-8, cable lock around electrical box. Date: May 29, 2008

Re-Solve, Inc. Site Inspection

Photographic Record

Photo Number: 5 - Site security at northern site boundary. Date: May 29, 2008

Photo Number: 6 - BFP pilot study area. Date: May 29, 2008

Re-Solve, Inc. Site Inspection

Photographic Record

Photo Number: 7 - BFP system. Date: May 29, 2008

Photo Number: 8 - Carbon adsorption, catalytic oxidator. Date: May 29, 2008

Re-Solve, Inc. Site Inspection

Photographic Record

Photo Number: 9 - Influent manifold, chemical storage. Date: May 29, 2008

Photo Number: 10 - Air-stripper, multi-media filters, backwash tank. Date: May 29, 2008

Re-Solve, Inc. Site Inspection

Photographic Record

Photo Number: 11 – Neutralization tank, sludge storage. Date: May 29, 2008

APPENDIX C

INTERVIEW LIST

INTERVIEW DOCUMENTATION FORM

The following is a list of individual interviewed for this five-year review. See the attached contact record(s) for a detailed summary of the interviews.

Name	Title/Position	Organization	Date
Michael O'Reilly	Environmental Affairs Coordinator	Town of Dartmouth	5/13/08
Arthur Thibedeaux	Resident	Town of Dartmouth	5/13/08
Donald Perry	Director/Planning Department	Town of Dartmouth	5/13/08

INTERVIEW RECORD

Site Name: Re-Solve, Inc. Superfund Site	**EPA ID No.: MAD980520621**	
Subject: Fourth Five-Year Review	**Time: 9:30 am**	**Date: 5/13/08**
Type: ☒ Telephone ☐ Visit ☐ Other **Location of Visit: N/A**	☐ Incoming ☒ Outgoing	

Contact Made By:

Name: Courtney LaVolpicelo	**Title: Engineer**	**Organization: Nobis Engineering, Inc.**

Individual Contacted:

Name: Mike O'Reilly	**Title: Environmental Affairs Coordinator**	**Organization: Town of Dartmouth**

Telephone No: 508-910-1822 **Fax No:** **E-Mail Address:**	**Street Address: Town Hall, 400 Slocum Road** **City, State, Zip: Dartmouth, MA 02747**

Summary Of Conversation

Q1: What is your overall impression of the project and Site?
A1: Mike's impression of the Site is that there is continuing success with the groundwater treatment plant, and that no issues have arisen in the past five years since the previous five-year review.

Q2: Are you aware of any issues/ concerns with the Site?
A2: Mike reviews monitoring results from the Site regularly and is not aware of any issues or concerns with the Site.

Q3: How do you feel the remedy is functioning at the Site?
A3: Mike commented that he speaks regularly with Joe Lemay (EPA TOPO) and feels confident that the remedy is functioning effectively.

Q4: Have there been any changes in the surrounding properties or land use in the last 5 years, or are any changes anticipated?
A4: No changes have been made in the surrounding or nearby properties, nor are any planned. There is, however, a small residential subdivision under construction down the street and up-gradient from the Site.

Q5: What has been the public interest and involvement with the Site?
A5: The Dartmouth Public has had very little interest of involvement with the Site since start-up of the groundwater treatment plant.

Q6: Does the Town have any particular property and/or re-use interests with the Site?
A6: The Town would consider using the existing treatment plant building for vehicle storage, should the remedy be determined complete.

Q7: Are you satisfied with the wetlands restoration at the Site?
A7: Mike expressed satisfaction with the wetlands restoration at the Site and agreed to perform an inspection during our Site Inspection scheduled for May 29, 2008.

INTERVIEW RECORD

Site Name: Re-Solve, Inc. Superfund Site	**EPA ID No.: MAD980520621**	
Subject: Fourth Five-Year Review	**Time: 9:45 am**	**Date: 5/13/08**
Type: ☒ Telephone ☐ Visit ☐ Other **Location of Visit: N/A**	☐ Incoming ☒ Outgoing	

Contact Made By:

Name: Courtney LaVolpicelo	**Title: Engineer**	**Organization: Nobis Engineering, Inc.**

Individual Contacted:

Name: Arthur Thibedeaux	**Title: Resident**	**Organization: Town of Dartmouth**

Telephone No: 508-678-5054 **Fax No:** **E-Mail Address:**	**Street Address: 1223 Old Fall River Road** **City, State, Zip: Dartmouth, MA 02747**

Summary Of Conversation

Q1: What is your overall impression of the project and Site?
A1: Arthur has not been to the Site recently, but is involved with the Annual Cornell Pond Fishing Derby. His impression is that it is a good sign that PCBs have been declining in fish tissue samples. He also commented that there is plenty of signage located at Cornell Pond regarding the fish advisory.

Q2: Are you aware of any issues/ concerns with the Site?
A2: Arthur stated he was not aware of any current issues or concerns with the Site.

Q3: How do you feel the remedy is functioning at the Site?
A3: Arthur commented that he speaks annually with Joe Lemay and feels as though the remedy is functioning effectively.

Q4: Have there been any changes in the surrounding properties or land use in the last 5 years, or are any changes anticipated?
A4: Arthur mentioned the 143-acre development on Miller's Way which has been constructed in the last 5 years or so, as well as the small development that is under construction off North Hixville Road.

INTERVIEW RECORD

Site Name: Re-Solve, Inc. Superfund Site	**EPA ID No.: MAD980520621**	
Subject: Fourth Five-Year Review	**Time: 9:30 am**	**Date: 5/13/08**
Type: ☒ Telephone ☐ Visit ☐ Other **Location of Visit: N/A**	☐ Incoming ☒ Outgoing	

Contact Made By:

Name: Courtney LaVolpicelo	**Title: Engineer**	**Organization: Nobis Engineering, Inc.**

Individual Contacted:

Name: Donald Perry	**Title: Director of Planning Department**	**Organization: Town of Dartmouth**

Telephone No: 508-910-1816 **Fax No:** **E-Mail Address:**	**Street Address: Town Hall, 400 Slocum Road** **City, State, Zip: Dartmouth, MA 02747**

Summary Of Conversation

Q1: What is your overall impression of the project and Site?
A1: Donald's impression of the Site is that there is has been no change in recent years.

Q2: Are you aware of any issues/ concerns with the Site?
A2: Donald is not aware of any issues or concerns with the Site.

Q3: How do you feel the remedy is functioning at the Site?
A3: Donald has not heard any news of the Site in recent years, so his impression is that the remedy must be functioning well.

Q4: Have there been any changes in the surrounding properties or land use in the last 5 years, or are any changes anticipated?
A4: Donald mentioned a recent Deed Restriction put into effect with between the Rod and Gun Club and the Site. Donald also discussed the new subdivision under construction off of North Hixville Road; Planning Department approval was not required based on the lot frontage of the parcel.

Q5: What has been the public interest and involvement with the Site?
A5: Donald concurred that the Dartmouth Public has had very little interest of involvement with the Site since start-up of the groundwater treatment plant.

Q6: Does the Town have any particular property and/or re-use interests with the Site?
A6: Donald was not aware of any re-use interests that the Town would have with the Site.

Additional Comment: Donald commented that the existing chain link fences are a bit of an eye-sore from the road, and he suggested that they be replaced with dark-coated chain link fences.

APPENDIX D

FUTURE RISKS AT THE NORTH ACCESS ROAD AND SOUTH GAP

To: Marc Bouvier

Nobis Engineering, Inc.

From: Cynthia Woods

Avatar Environmental, LLC.

Date: September 18, 2008

Subject: Addendum to Re-Solve Five-Year Review

Following up on our discussion with Joe LeMay on September 10, 2008, future risks were calculated for residents from exposures to PCBs in soils at two areas outside the Re-Solve Superfund Site property boundaries, the North Access Area and at the South Gap Area. Soil samples used in these calculations were collected during post excavation confirmatory sampling from the floor and sidewalls of the excavations and analyzed for total PCBs. Following the removal action, an 18 inch gravel cap was placed on the North Access Area. No cap was placed at the South Gap Area; however, an institutional control allowing access to the site for monitoring purposes and prohibiting interference with the remedy is in place for the South Gap Area.

ProUCL version 4 software was used to calculate 95% upper confidence levels on the mean (95%UCLs) for each area. Table 1.1 presents the soil sampling results used in the calculations of 95%UCLs. One half the detection limit was used for samples reported as non-detects. The risk computations used the 95% UCL concentrations from the post excavation confirmatory soil sampling to estimate risks. The 95% UCL ProUCL outputs are presented on Tables 1.2 and 1.3 for the North access Area and the South Gap Area, respectively.

The presumed scenarios for this site are adults and older child trespassers. As a conservative screen, only risks to residents were evaluated. Because young children are more sensitive than adults to non-carcinogens, the evaluation of non-cancer hazard indices is limited to child residents. Risks to trespassers would be expected to be less than risks to residents.

Cancer risk computations for adult and child residents combined who may be potentially exposed to soils via dermal contact and ingestion pathways are provided on Tables 2.1 and 2.2 for the North access Area and the South Gap Area, respectively. Non-cancer hazard index computations for child residents who may be potentially exposed to soils via dermal contact and ingestion pathways are provided on Tables 3.1 and 3.2 for the North access Area and the South Gap Area, respectively.

The exposure assumptions and rates used to calculate risks are presented below and on the tables. Values selected were obtained from EPA's Risk Assessment Guidance for Superfund Volume I: Human Health Evaluation Manual Part A (EPA, 1989) and Part E (EPA, 2004).

Incidental Soil Ingestion Exposure Assumptions:

Adult soil ingestion rate: 100 mg/event
Young child soil ingestion rate: 200 mg/event
Exposure frequency: 150 days/year
Adult exposure duration: 24 years
Young child exposure duration: 6 years
Adult body weight: 70 kg
Young child body weight: 15 kg
North Access Area PCB concentration: 20.87 mg/kg
South Gap Area PCB concentration: 4.816 mg/kg

Dermal Contact Exposure Assumptions:

Dermal absorption PCBs: 0.14
Adult exposed surface area: 5,700 cm^2/day
Young child exposed surface area: 2,800 cm^2/day

Adult soil adherence factor: 0.07 mg/cm^2-event

Young child soil adherence factor: 0.04 mg/cm^2-event

Exposure frequency: 150 days/year

Adult exposure duration: 24 years

Young child exposure duration: 6 years

Adult body weight: 70 kg

Young child body weight: 15 kg

North Access Area PCB concentration: 20.87 mg/kg

South Gap Area PCB concentration: 4.816 mg/kg

Toxicity values for PCBs represent conservative values obtained from EPA sources. To evaluate cancer risks, an oral cancer slope factor (CSF) of 2.0 $(mg/kg\text{-}day)^{-1}$ obtained from EPA's Integrated Risk Information Systems (IRIS) database (EPA, 2008) was used. This slope factor represents an upper bound value considered for high risk and persistent PCBs. To evaluate non-cancer health hazards, an oral Reference Dose (RfD) of $2x10^{-5}$ mg/kg-day, obtained from Oak Ridge National Laboratory's Regional Screening Levels for Chemical Contaminants at Superfund Sites. This RfD is commonly used for PCB mixtures containing higher molecular weight Aroclors. Dermal CSF and RfDs are based on oral toxicity factors adjusted for the gastrointestinal absorption factor used in the toxicity studies on which the toxicity factors are based.

Formulas used to calculate risks are presented on the tables.

Cancer risk for North Access Area Resident exposure to PCBs (ingestion + dermal) = **3.4×10^{-5}**

Cancer risk for South Gap Area Resident exposure to PCBs (ingestion + dermal) = **7.9×10^{-6}**

Hazard index for North Access Area Child Resident exposure to PCBs (ingestion + dermal) = **6**

Hazard index for South Gap Area Child Resident exposure to PCBs (ingestion + dermal) = **1**

The combined cancer risk estimates for residents at both areas are within the EPA's target cancer risk range of 1×10^{-4} to 10^{-6}. The non-cancer hazard indices for residents at the North Access Area exceed the target hazard index of 1. This indicates a potential for adverse health effects. No adverse non-cancer human health effects are anticipated for residents at the South Gap Area. The non-cancer hazard indices for residents at the North Access Area exceed the target hazard index of 1. This indicates a potential for adverse health effects for residents at the North Access Area.

There are uncertainties associated with all human health risk calculations, which should be considered when making risk management decisions.

Firstly, it should be noted that residential exposures to these two areas are not currently occurring and evaluation of this scenario is a conservative approach to protecting potential future exposures. Soils in the North Access Area are currently covered by the 18 inch gravel cap. The evaluation of this area assumes the cap has been degraded and residents are directly contacting contaminated soils on a frequent basis, despite the existence of a fence separating the area from the nearby residences. Soils in the South Gap Area are currently not covered by a cap, but are located in an area physically separated from the nearby residences by Carol's Brook. The evaluation of this area assumes residents are contacting contaminated soils on a frequent basis similar to contact frequencies for soils in their backyards.

Also of note for these calculations is the use of an exposure frequency of 150 days per year. Federal guidelines (EPA, 2004) recommend an exposure frequency of 350 days per year for residential exposures to soils; however, because the ground surface in New England is frozen and covered by snow for

much of the year, 150 days may be considered more realistic at this site. In addition, the federal recommended soil adherence factor (EPA, 2004) for residential children is 0.2 mg/cm^2 per event. This soil adherence factor is based on children playing in wet soil. Because soils at the site are dry, a soil adherence factor based on children playing in dry soil (0.04 mg/cm^2 per event) was selected to estimate dermal risks to children.

The non-cancer hazard indices for residents at the North Access Area and the South Gap Area utilizing the more conservative federal recommendations for exposure frequency and soil adherence factors in the calculations would be 19 and 4, respectively. Cancer risks for residents at the North Access Area and the South Gap Area utilizing the more conservative federal recommendations for exposure frequency and soil adherence factors in the calculations would be 9.4×10^{-5} and 2.1×10^{-5}, respectively.

References:

EPA, 1989. *Risk Assessment Guidance for Superfund (RAGS), Volume I: Human Health Evaluation Manual (Part A) (Interim Final)* U.S. Environmental Protection Agency, Washington, DC, EPA/540/1-89-002, December 1989.

EPA, 2004. *Risk Assessment Guidance for Superfund (RAGS), Volume I: Human Health Evaluation Manual (Part E, Supplemental Guidance for Dermal Risk Assessment)* U.S. Environmental Protection Agency, Washington, DC, EPA/540/R/99/005, July 2004.

EPA, 2008. EPA's *Integrated Risk Information System*, on-line at http://www.epa.gov/iris, accessed September, 2008.

EPA, 2008. EPA's *Integrated Risk Information System*, on-line at http://www.epa.gov/iris, accessed September, 2008.

ORNL, 2008. *Oak Ridge National Laboratory's Regional Screening Levels for Chemical Contaminants at Superfund Sites.* http://epa-prgs.ornl.gov/chemicals/index.shtml, accessed September 2008.

LIST OF TABLES

Table 1.1: Soil Sample Results
Table 1.2: Exposure Point Concentration Calculation- North Access Road Area
Table 1.3: Exposure Point Concentration Calculation- South Gap Area
Table 2.1: Cancer Risk Summary-North Access Road Area
Table 2.2: Cancer Risk Summary-South Gap Area
Table 3.1: Non-Cancer Risk Summary-North Access Road Area
Table 3.2: Non-Cancer Risk Summary-South Gap Area

Sincerely,

Cynthia Woods

Cynthia Woods
Senior Risk Assessor

Cc: M. Bouvier (Nobis Engineering)
J. Walsh (Avatar Environmental)

TABLE 1.1
SOIL SAMPLE RESULTS
NORTH ACCESS AND SOUTH GAP AREAS
RE-SOLVE SUPERFUND SITE
NORTH DARTMOUTH, MASSACHUSETTS

South Gap		North Access		
Sample Number	PCB Results ppm	Sample Number	PCB Results ppm	Comment
1	6.9	1	<1	
2	<5	2	<1	
3	7.7	3	<1	
4	<5	4	<1	
5	8.1	5	<1	
6	3.7	6	22	
7	4.2	7	<1	
8	<5	8	<1	
9	2.9	9	5.2	
10	<5	**10**	**36**	followed up and replaced with #13
11	<5	11	0.5	
12	1.6	**12**	**260 J**	followed up and replaced with #14
13	<5	13	4.6	
14	<5	14	<1	

Source: Rust Remedial Services, Inc., Re-Solve Site, June, 1995.

TABLE 1.2
EXPOSURE POINT CONCENTRATION CALCULATION
NORTH ACCESS ROAD AREA
RE-SOLVE SUPERFUND SITE
NORTH DARTMOUTH, MASSACHUSETTS

North Access

General Statistics			
Number of Valid Samples	12	Number of Unique Samples	4
Raw Statistics		Log-transformed Statistics	
Minimum	0.5	Minimum of Log Data	-0.693
Maximum	22	Maximum of Log Data	3.091
Mean	3.025	Mean of log Data	0.00229
Median	0.5	SD of log Data	1.312
SD	6.213		
Coefficient of Variation	2.054		
Skewness	3.048		
Relevant UCL Statistics			
Normal Distribution Test		Lognormal Distribution Test	
Shapiro Wilk Test Statistic	0.481	Shapiro Wilk Test Statistic	0.601
Shapiro Wilk Critical Value	0.859	Shapiro Wilk Critical Value	0.859
Data not Normal at 5% Significance Level		Data not Lognormal at 5% Significance Level	
Assuming Normal Distribution		Assuming Lognormal Distribution	
95% Student's-t UCL	6.246	95% H-UCL	9.498
95% UCLs (Adjusted for Skewness)		95% Chebyshev (MVUE) UCL	5.917
95% Adjusted-CLT UCL	7.661	97.5% Chebyshev (MVUE) UCL	7.562
95% Modified-t UCL	6.509	99% Chebyshev (MVUE) UCL	10.79
Gamma Distribution Test		Data Distribution	
k star (bias corrected)	0.479	Data do not follow a Discernable Distribution (0.05)	
Theta Star	6.317		
nu star	11.49		
Approximate Chi Square Value (.05)	4.895	Nonparametric Statistics	
Adjusted Level of Significance	0.029	95% CLT UCL	5.975
Adjusted Chi Square Value	4.257	95% Jackknife UCL	6.246
		95% Standard Bootstrap UCL	5.722
Anderson-Darling Test Statistic	2.504	95% Bootstrap-t UCL	12.79
Anderson-Darling 5% Critical Value	0.78	95% Hall's Bootstrap UCL	14.73
Kolmogorov-Smirnov Test Statistic	0.465	95% Percentile Bootstrap UCL	6.267
Kolmogorov-Smirnov 5% Critical Value	0.258	95% BCA Bootstrap UCL	8.4
Data not Gamma Distributed at 5% Significance Level		95% Chebyshev(Mean, Sd) UCL	10.84
		97.5% Chebyshev(Mean, Sd) UCL	14.23
Assuming Gamma Distribution		99% Chebyshev(Mean, Sd) UCL	20.87
95% Approximate Gamma UCL	7.102		
95% Adjusted Gamma UCL	8.167		
Potential UCL to Use		Use 99% Chebyshev (Mean, Sd) UCL	20.87

TABLE 1.3
EXPOSURE POINT CONCENTRATION CALCULATION
SOUTH GAP AREA
RE-SOLVE SUPERFUND SITE
NORTH DARTMOUTH, MASSACHUSETTS

General UCL Statistics for Full Data Sets

User Selected Options	
From File	C:\ProUCL 4.0\Re-Solve.wst
Full Precision	OFF
Confidence Coefficient	95%
Number of Bootstrap Operations	2000

South Gap

General Statistics			
Number of Valid Samples	14	Number of Unique Samples	8
Raw Statistics		Log-transformed Statistics	
Minimum	1.6	Minimum of Log Data	0.47
Maximum	8.1	Maximum of Log Data	2.092
Mean	3.757	Mean of log Data	1.197
Median	2.5	SD of log Data	0.498
SD	2.165		
Coefficient of Variation	0.576		
Skewness	1.324		
Relevant UCL Statistics			
Normal Distribution Test		Lognormal Distribution Test	
Shapiro Wilk Test Statistic	0.738	Shapiro Wilk Test Statistic	0.823
Shapiro Wilk Critical Value	0.874	Shapiro Wilk Critical Value	0.874
Data not Normal at 5% Significance Level		Data not Lognormal at 5% Significance Level	
Assuming Normal Distribution		Assuming Lognormal Distribution	
95% Student's-t UCL	4.782	95% H-UCL	4.999
95% UCLs (Adjusted for Skewness)		95% Chebyshev (MVUE) UCL	5.921
95% Adjusted-CLT UCL	4.928	97.5% Chebyshev (MVUE) UCL	6.878
95% Modified-t UCL	4.816	99% Chebyshev (MVUE) UCL	8.757
Gamma Distribution Test		Data Distribution	
k star (bias corrected)	3.272	Data do not follow a Discernable Distribution (0.05)	
Theta Star	1.148		
nu star	91.62		
Approximate Chi Square Value (.05)	70.55	Nonparametric Statistics	
Adjusted Level of Significance	0.0312	95% CLT UCL	4.709
Adjusted Chi Square Value	68.1	95% Jackknife UCL	4.782
		95% Standard Bootstrap UCL	4.697
Anderson-Darling Test Statistic	1.469	95% Bootstrap-t UCL	5.265
Anderson-Darling 5% Critical Value	0.74	95% Hall's Bootstrap UCL	4.711
Kolmogorov-Smirnov Test Statistic	0.298	95% Percentile Bootstrap UCL	4.75
Kolmogorov-Smirnov 5% Critical Value	0.23	95% BCA Bootstrap UCL	4.879
Data not Gamma Distributed at 5% Significance Level		95% Chebyshev(Mean, Sd) UCL	6.279
		97.5% Chebyshev(Mean, Sd) UCL	7.371
Assuming Gamma Distribution		99% Chebyshev(Mean, Sd) UCL	9.514
95% Approximate Gamma UCL	4.879		
95% Adjusted Gamma UCL	5.055		
Potential UCL to Use		Use 95% Student's-t UCL	4.782
		or 95% Modified-t UCL	4.816

TABLE 2.1
CANCER RISK SUMMARY
RESIDENTIAL EXPOSURE TO SOIL
NORTH ACCESS ROAD AREA
RE-SOLVE SUPERFUND SITE
NORTH DARTMOUTH, MASSACHUSETTS

COPC	EPC mg/kg	95%UCL	Dermal ABS[1,2]	Oral Exposure Factor d^{-1}	Dermal Exposure Factor d^{-1}	CSForal[3] $(mg/kg\text{-}d)^{-1}$	GI ABS used in toxicity study[4]	CSFabs[5] $(mg/kg\text{-}d)^{-1}$	Ingestion Cancer Risk	Dermal Cancer Risk	Total Cancer Risk
Total PCBs	20.87	99% Chebyshev UCL	0.14	6.69E-07	1.50E-07	2.00E+00	1.00E+00	2.00E+00	2.79E-05	6.24E-06	3.42E-05
											3.42E-05

Age-Adjusted Ingestion Rate = ((200 mg/d * 6 y)/15 kg) + ((100 mg/d * 24 y)/70 kg) = 114 mg-y/kg-d
Age-Adjusted Dermal Contact Rate = ((2800 cm^2 * 0.04 mg/cm^2-ev * 6 y)/15 kg) + ((5700 cm^2 * 0.07 mg/cm^2-ev * 24 y)/70 kg) = 182 mg-y/kg-event

Oral Exposure Factor = Age-adjusted Ingestion Rate *Fraction Ingested* Exposure Frequency*Conversion Factor/Averaging Time
= (114 mg-y/kg-d * 1.0 * 150 d/y * 10-6 kg/mg)/(70 y * 365 d/y)
Dermal Exposure Factor = Age-adjusted Dermal Contact Rate * Exposure Frequency*ABS_{dermal}*Conversion Factor/Averaging Time
= (182 mg-y/kg-ev * 1 ev/d * 150 d/y * ABS_{dermal} * 10-6 kg/mg)/(70 y * 365 d/y)
CSFabs = CSForal / GI ABS used in toxicity study
Cancer Risk = EPC*Exposure Factor*CSF

1 Dermal ABS are absorption factors based on exposures to soils.
2 Exhibit 3-4 US EPA, 2004 RAGS E, Dermal Risk Assessment Guidance.
3 Oral CSFs are used in conjunction with administered oral intakes.
4 Exhibit 4-1 US EPA, 2004 RAGS E, Dermal Risk Assessment Guidance. These values represent absorption factors for the route of administration used in the toxicity study, generally food or water.
5 Absorbed CSFs are used in conjunction with absorbed intakes when soil absorption factors are available for the route of exposure.

TABLE 2.2
CANCER RISK SUMMARY
RESIDENTIAL EXPOSURE TO SOIL
SOUTH GAP AREA
RE-SOLVE SUPERFUND SITE
NORTH DARTMOUTH, MASSACHUSETTS

COPC	EPC mg/kg	95%UCL	Dermal ABS[1,2]	Oral Exposure Factor d^{-1}	Dermal Exposure Factor d^{-1}	CSForal[3] $(mg/kg\text{-}d)^{-1}$	GI ABS used in toxicity study[4]	CSFabs[5] $(mg/kg\text{-}d)^{-1}$	Ingestion Cancer Risk	Dermal Cancer Risk	Total Cancer Risk
Total PCBs	4.816	Modified-t UCL	0.14	6.69E-07	1.50E-07	2.00E+00	1.00E+00	2.00E+00	6.45E-06	1.44E-06	7.89E-06
											7.89E-06

Age-Adjusted Ingestion Rate = ((200 mg/d * 6 y)/15 kg) + ((100 mg/d * 24 y)/70 kg) = 114 mg-y/kg-d
Age-Adjusted Dermal Contact Rate = ((2800 cm^2 * 0.04 mg/cm^2-ev * 6 y)/15 kg) + ((5700 cm^2 * 0.07 mg/cm^2-ev * 24 y)/70 kg) = 182 mg-y/kg-event

Oral Exposure Factor = Age-adjusted Ingestion Rate *Fraction Ingested* Exposure Frequency*Conversion Factor/Averaging Time
= (114 mg-y/kg-d * 1.0 * 150 d/y * 10-6 kg/mg)/(70 y * 365 d/y)
Dermal Exposure Factor = Age-adjusted Dermal Contact Rate * Exposure Frequency*ABS_{dermal}*Conversion Factor/Averaging Time
= (182 mg-y/kg-ev * 1 ev/d * 150 d/y * ABS_{dermal} * 10-6 kg/mg)/(70 y * 365 d/y)
CSFabs = CSForal / GI ABS used in toxicity study
Cancer Risk = EPC*Exposure Factor*CSF

1 Dermal ABS are absorption factors based on exposures to soils.
2 Exhibit 3-4 US EPA, 2004 RAGS E, Dermal Risk Assessment Guidance.
3 Oral CSFs are used in conjunction with administered oral intakes.
4 Exhibit 4-1 US EPA, 2004 RAGS E, Dermal Risk Assessment Guidance. These values represent absorption factors for the route of administration used in the toxicity study, generally food or water.
5 Absorbed CSFs are used in conjunction with absorbed intakes when soil absorption factors are available for the route of exposure.

TABLE 3.1
NON-CANCER RISK SUMMARY
RESIDENTIAL EXPOSURE TO SOIL
NORTH ACCESS ROAD AREA
RE-SOLVE SUPERFUND SITE
NORTH DARTMOUTH, MASSACHUSETTS

COPC	EPC mg/kg	95%UCL	Dermal ABS[1,2]	Oral Exposure Factor d^{-1}	Dermal Exposure Factor d^{-1}	RfDoral[3] mg/kg-d	GI ABS used in toxicity study[4]	RfDabs[5] mg/kg-d	Ingestion Hazard Index	Dermal Hazard Index	Total Hazard Index
PCBs	20.87	99% Chebyshev UCL	0.14	5.48E-06	4.30E-07	2.00E-05	1.00E+00	2.00E-05	5.72E+00	4.48E-01	6.17E+00
											6.17E+00

Oral Exposure Factor = Ingestion Rate *Fraction Ingested* Exposure Frequency*Exposure Duration*Conversion Factor/BW*Averaging Time
= (200 mg/d * 1.0 * 150 d/y * 6 y * 10-6 kg/mg)/(15 kg * 6 y * 365 d/y)

Dermal Exposure Factor = Surface Area*Soil-to-skin Adherence Factor * Exposure Frequency*Exposure Duration*ABS_{dermal}*Conversion Factor/BW*Averaging Time
= (2800 cm^2 * 0.04 mg/cm^2-ev * 1 ev/d * 150 d/y * 6 y * ABS_{dermal} * 10-6 kg/mg)/(15 kg * 6 y * 365 d/y)

RfDabs = RfDoral * GI ABS used in toxicity study
HI = EPC*Exposure Factor/RfD

1 Dermal ABS are absorption factors based on exposures to soils.
2 Exhibit 3-4 US EPA, 2004 RAGS E, Dermal Risk Assessment Guidance.
3 Oral RfDs are used in conjunction with administered oral intakes when oral soil absorption factors are not available.
4 Exhibit 4-1 US EPA, 2004 RAGS E, Dermal Risk Assessment Guidance. These values represent absorption factors for the route of administration used in the toxicity study, generally food or water.
5 Absorbed RfDs are used in conjunction with absorbed intakes when soil absorption factors are available for the route of exposure.

TABLE 3.2
NON-CANCER RISK SUMMARY
RESIDENTIAL EXPOSURE TO SOIL
SOUTH GAP AREA
RE-SOLVE SUPERFUND SITE
NORTH DARTMOUTH, MASSACHUSETTS

COPC	EPC mg/kg	95%UCL	Dermal ABS[1,2]	Oral Exposure Factor d^{-1}	Dermal Exposure Factor d^{-1}	RfDoral[3] mg/kg-d	GI ABS used in toxicity study[4]	RfDabs[5] mg/kg-d	Ingestion Hazard Index	Dermal Hazard Index	Total Hazard Index
PCBs	4.816	Modified-t UCL	0.14	5.48E-06	4.30E-07	2.00E-05	1.00E+00	2.00E-05	1.32E+00	1.03E-01	1.42E+00
											1.42E+00

Oral Exposure Factor = Ingestion Rate *Fraction Ingested* Exposure Frequency*Exposure Duration*Conversion Factor/BW*Averaging Time
= (200 mg/d * 1.0 * 350 d/y * 6 y * 10-6 kg/mg)/(15 kg * 6 y * 365 d/y)

Dermal Exposure Factor = Surface Area*Soil-to-skin Adherence Factor * Exposure Frequency*Exposure Duration*ABS_{dermal}*Conversion Factor/BW*Averaging Time
= (2800 cm^2 * 0.2 mg/cm^2-ev * 1 ev/d * 350 d/y * 6 y * ABS_{dermal} * 10-6 kg/mg)/(15 kg * 6 y * 365 d/y)

RfDabs = RfDoral * GI ABS used in toxicity study
HI = EPC*Exposure Factor/RfD

1 Dermal ABS are absorption factors based on exposures to soils.
2 Exhibit 3-4 US EPA, 2004 RAGS E, Dermal Risk Assessment Guidance.
3 Oral RfDs are used in conjunction with administered oral intakes when oral soil absorption factors are not available.
4 Exhibit 4-1 US EPA, 2004 RAGS E, Dermal Risk Assessment Guidance. These values represent absorption factors for the route of administration used in the toxicity study, generally food or water.
5 Absorbed RfDs are used in conjunction with absorbed intakes when soil absorption factors are available for the route of exposure.

APPENDIX E

ADULT ONLY VAPOR INTRUSION SCREENING VALUES

Target Groundwater Concentration Corresponding to 10^{-6} Cancer Risk Due to Vapor Intrusion,
Assuming Shallow Soil Gas to Indoor Air Attenuation Factor =0.1

Chemical	IUR $(ug/m^3)^{-1}$	RfC (ug/m^3)	Target Indoor Air (10^{-6} risk) (ug/m^3)	Target Soil Gas Concentration (AF=0.1) (ug/m^3)	Henry's Law Constant (H)	Target Groundwater Concentration (ug/l)
Tetrachloroethylene	5.90E-06		4.12E-01	4.12E+00	7.50E-01	5.50E-01
Vinyl chloride	4.40E-06		5.53E-01	5.53E+00	1.10E+00	5.03E-01

Notes:

Carcinogenic Target Indoor Air $(\mu g/m^3)$ = Target Cancer Risk x AT_c / (EF x ED x IUR)

where:

Target Cancer Risk = 10-6, 10-5, or 10-4

AT_c = averaging time, carcinogens (25,5550 days)

EF = exposure frequency for a resident (350 days/year)

ED = exposure duration for a resident (30 years)

IUR = inhalation unit risk factor $(ug/m^3)^{-1}$

Non-cancer Target Indoor Air $(\mu g/m^3)$ =Target Hazard Quotient (THQ) x RfC

where:

THQ = 1

RfC = Reference Concentration $(\mu g/m^3)$

Concentrations in ppbv (conversion from $\mu g/m^3$ to ppbv) = $C(\mu g/m^3) \times 10^9 (ppb/atm) \times 10^{-3} (m^3/L) \times R \times T/(MW \times 10^6 [\mu g/g])$

where:

R = gas constant (0.0821 L-atm/mole-K)

T = absolute temperature (298K)

MW = molecular weight (g/mole)

Target Shallow Soil Gas $(\mu g/m^3)$ = Target Indoor Air / α

where α = soil gas to indoor air attenuation factor (0.1 or 0.02 for target shallow soil gas)

Target Deep Soil Gas $(\mu g/m^3)$ = Target Indoor Air / α

where α = soil gas to indoor air attenuation factor (0.01 or 0.002 for target deep soil gas)

Target Groundwater $(\mu g/L)$ = Target Indoor Air x 10^{-3} m^3/L / (H x α)

where α = soil gas to indoor air attenuation factor (0.001 and partitioning across the water table obey's Henry's Law)

IUR for PCE = 4.4E-06 per ug/m3 (adult exposure only)