Chapter 6 Case Studies of Metal Recovery Operations Subject To RCRA Jurisdiction

EPA has completed five case studies of metal recovery operations that are currently subject to RCRA Subtitle C jurisdiction. The purpose of completing these case studies is to provide firm specific information on the way RCRA regulation may affect metal recovery of hazardous wastes. To complete these case studies, EPA examined a number of metal recovery operations and selected those operations that the Agency believes help to compare and contrast different aspects of RCRA regulations on metal recovery. EPA has selected: 1) a commercially established hydrometallurgical operation, U.S. Filter, 2) a commercially established pyrometallurgical operation, Inmetco, 3) a pilot scale metal recovery operation using an innovative technology, Molten Metal Technology, 4) a metal recovery operation that partially recovers zinc from steel wastes, Horsehead Resource Development and 5) a battery manufacturer that recovers spent lead acid batteries on site, East Penn Manufacturing Co.. Case studies include the reason for selection, a case history, process description, and RCRA regulatory issues and analysis.

EPA has presented the perspectives of the case study respondents on RCRA Subtitle C regulation in order to learn how each firm views Federal hazardous waste regulations effects on metal recovery from its operations. EPA's presentation of these perspectives does not constitute Agency agreement with the accuracy of the statements. In addition, no statement presented by these case studies should be construed to be a statement of Agency policy or regulatory interpretation regarding the case study respondent's operations or their process outputs (whether wastes or products).

6.1 U.S. Filter Recovery Services Inc; Roseville, MN

EPA has selected U.S. Filter Recovery Services Inc. (USFRS) as a case study for a variety of reasons. First, USFRS has been selected as a commercially established hydrometallurgical metal recovery facility. In contrast to pyrometallurgical case study respondents that use high temperature metal recovery, USFRS recovers metals from hazardous wastes using hydrometallurgical recovery methods such as ion exchange, chemical precipitation and electrowinning. (At least one issue of regulatory significance is that hydrometallurgical metal recovery processes are not potentially subject to Boiler and Industrial Furnace permitting requirements.)

Second, USFRS processes listed materials generated from metal finishing operations (e.g., electroplating sludge) in contrast to other case study respondent waste streams of spent-lead acid batteries and electric arc furnace dust. Metals recovered from metal finishing waste streams can include chromium, copper, nickel, zinc and iron. Metal finishing operations are comparatively smaller and earn less revenue than other generators of metal-bearing hazardous wastes. This limits their options for metal recovery on-site because of economies of scale. For these generators, a central recovery facility may be the only alternative to commercial treatment and disposal of electroplating sludges. This type of facility processes and manages generator's wastes for a user fee (and also sells recovered materials to supplement its revenue)

Third, USFRS is the only commercially established central recovery facility[94] of its type in the United States. Two other attempts to site central recovery facilities for metal finishing operations in the United States have failed at least in part due to federal Clean Water Act enforcement.[95] In addition, two feasibility studies have concluded that central recovery facilities would not be cost-effective when compared with other waste management options.[96] In light of this history and analysis, EPA has studied the regulatory climate and history that has contributed to USFRS' success.

History

In 1982, the Metropolitan Waste Control Commission (MWCC, a local wastewater management authority in Minneapolis-St. Paul) and local industry formed a task force to evaluate the feasibility of a central recovery facility in the area to process wastes and wastewaters from metal finishing operations. In 1983, local industry formed and became share holders of the Metropolitan Recovery Corporation (MRC). In 1984, MWCC and MRC agreed to allow MRC shareholders to apply civil penalties incurred for noncompliance with federal pretreatment categorical standards for metal finishing operations toward the construction of a central recovery facility. MRC shareholder companies raised $1.2 million in revenue for the construction of the proposed facility. In October 1985, MRC submitted an application for a RCRA treatment and storage permit from the Minnesota Pollution Control Agency. Its permit was approved in December of 1986.

In July 1986, MRC formed a partnership with Lancy Recovery Inc. (Lancy) called Metro Recovery Systems (MRS). Lancy provided $2.2 million in additional revenue. The St. Paul Port Authority sold $6.2 million in revenue bonds to complete financing for the facility. The facility was constructed between September 1987 and July 1988 when it became operational and began accepting wastes. In December 1991, U.S. Filter Corporation purchased MRS. It was renamed U.S. Filter Recovery Services in July 1992.

Process Description (Refer to Chart Next Page)

USFRS has contracts with each of its customers to complete processing, transport and collection of both dilute and concentrated waste streams. For dilute wastestreams such as plating rinse waters, USFRS installs a series of ion exchange resin canisters on site at the customer facility. When these canisters become spent, USFRS exchanges the canisters with fresh ones and transports the spent canisters back to the central recovery facility. Metals (principally zinc, nickel and copper) are stripped from the canisters and placed into electrolytic metal recovery cells and recovered from plates as metals. The regenerated resins are then returned to the customer facility. USFRS representatives state that by keeping waste streams segregated that metals recovered from these streams have a higher level of purity than rinse waters that are mixed together and then have metals reconstituted in a series of separate processes.

Concentrated waste streams such as batch dumps are transported from the customer facility to the central recovery facility and segregated by type (acids, alkalines, cyanides, or ammonia). Then, depending upon the chemical characteristics of the waste, it is treated and either processed for further recovery (electrowinning, chemical precipitation, solids dewatering, chrome reduction, cyanide destruction) or stabilized and sent on for land disposal. Metals (zinc, copper or nickel) can be recovered as either a metal (e.g., pure copper) or as a metal compound such as copper oxide.

The USFRS facility itself has a series of engineering controls designed to prevent the release of materials to the environment. The tanks receiving concentrated wastes are made with reinforced fiberglass to contain materials that would corrode steel tanks. The tanks themselves are within a secondary spill containment cement dike that is large enough to contain the contents of an entire tank in the event of a rupture. The facility is entirely surrounded by a six inch curb to prevent releases from the building. The floor is made of eight-inch concrete with double rebar and coated with three layers of plastic impregnated fiberglass to resist penetration by waste chemicals. All joints are sealed with polyvinyl chloride water stops. The floor is also sloped to direct any spill into a series of trenches that leads to a central sump for collection and subsequent treatment.

During EPA's site visit to USFRS in February of 1993, the company was recovering copper oxide for sale to wood preservers, animal feed industries and others. USFRS was also recovering copper and nickel for sale to scrap dealers. The company was investigating the possibility of hydrometallurgical recovery of nickel-cadmium batteries. Other recovered products include regenerated acid and alkaline etchants, and nickel and zinc compounds.

Figure 6.1 Facility Diagram For U.S. Filter Recovery Systems Inc.

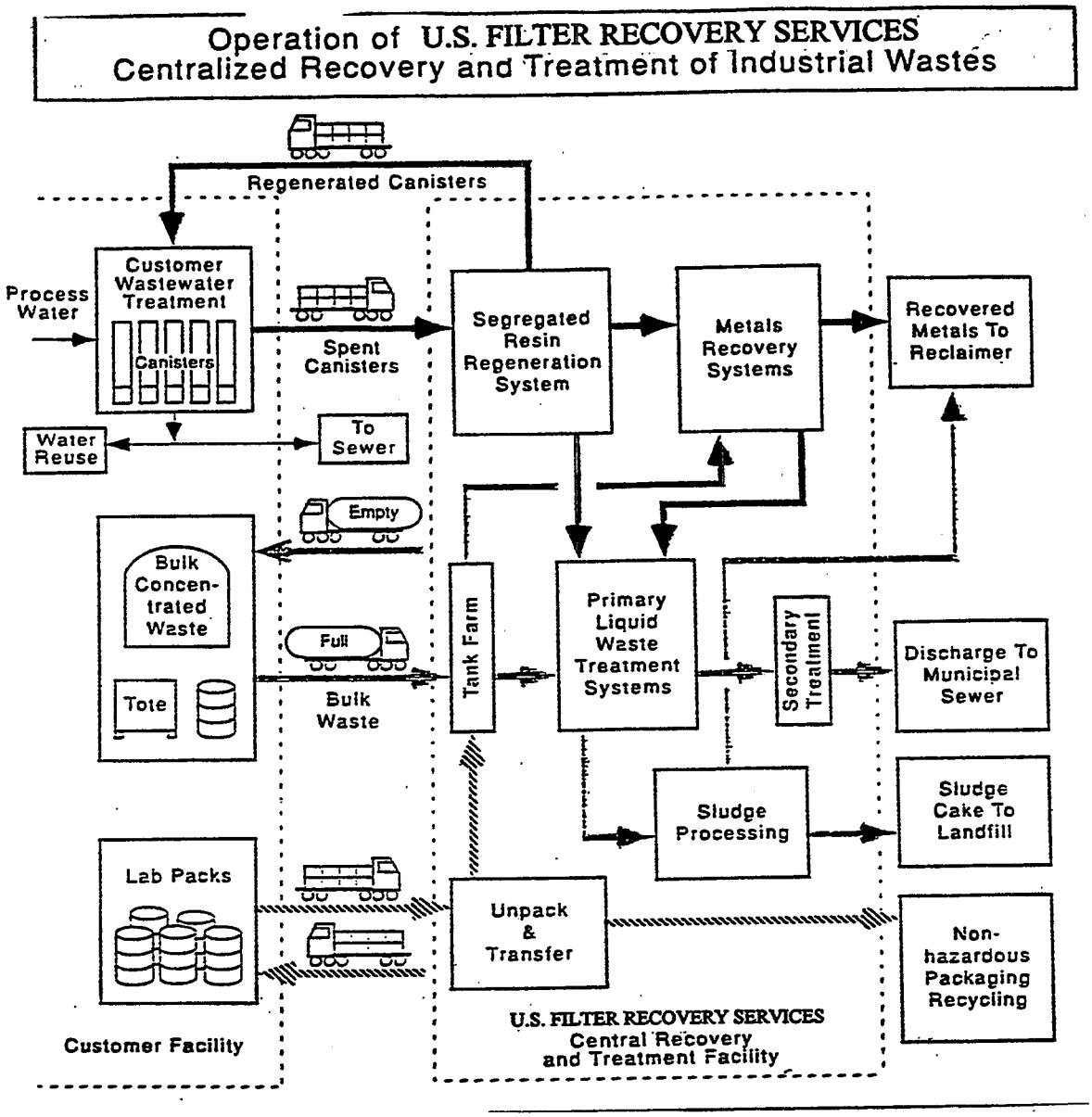

Regulatory Issues & Analysis

In general, RCRA has not been a major regulatory obstacle to recycling at USFRS. The major regulatory issues related to metal recovery for USFRS are 1) the effect of the derived-from rule on managing process residuals from the facility for recovery, and 2) the effect of state taxes linked to the Emergency Planning and Community Right To Know Act. Permitting requirements and corrective action issues have been of secondary importance.

Derived-From Rule

Some of the sludges from concentrated wastes that USFRS receives from its customers are not amenable for recovery in USFRS' process, but may be amenable to high temperature metal recovery. However, USFRS' policy is to manage these materials for treatment and disposal in a hazardous waste landfill. This conservative policy is designed to prevent Superfund liability to USFRS and its customers. USFRS representatives state that many of these materials would be managed for recovery rather than treatment and disposal if not for the derived-from rule. The company is concerned that if the sludges are managed by high temperature metal recovery and the slag is still considered to be a hazardous waste that USFRS and its customers could become potentially responsible parties if the slag becomes part of a Superfund site.

State Taxation

In addition to the derived-from rule concerns, USFRS contends that a major regulatory disincentive to recovering metals from plating wastes is Minnesota's pollution prevention fee. This fee is based on reported releases from facilities under the Emergency Planning and Community Right-To-Know Act (EPCRA also known as SARA Title III). Under the definition of release, management on-site at the plating operation is not a release and would not be taxed. However, if plating wastes are shipped off-site to the USFRS for recovery, this is defined as a release and is therefore taxable. U.S Filter representatives state that this is an economic disincentive for metal platers to ship their wastes to the central recovery facility.

Permitting and Facility-Wide Corrective Action

According to company representatives, permitting and facility-wide corrective action have not been regulatory impediments to recycling at USFRS. Regarding facility-wide corrective action, the facility is located in an industrial park in Roseville, a suburb of Minneapolis and St. Paul. The site inspection did not reveal any releases of contaminants although the company routinely monitors groundwater on its site.

Despite a cost of $800,000 and 14 months to obtain its permit, the company obtained both its RCRA storage and treatment permit in advance of constructing its facility. However, permitting has been a major disincentive to siting additional USFRS facilities across the nation. When asked about regulatory alternatives to permitting such as a permit-by-rule or a self-implementing set of management standards, Brian Rooney, Recovered Products Manager at USFRS,[97] suggested that such an alternative would go a long way to minimize the risk and uncertainty associated with the current permitting process.

As mentioned above, since USFRS is a hydrometallurgical operation, it is not potentially subject to boiler and industrial furnace permit requirements. This is important because plating wastes of the type USFRS recovers may not qualify for the metal recovery exemption of Part 266 of 40 CFR (standards for boilers and industrial furnaces). BIF standards may provide a competitive advantage for hydrometallurgical metal recovery operations.[98]

Greg Norgaard, Vice-President and General Manager of U.S Filter has indicated that cooperation between the Minnesota Pollution Control Agency, Metropolitan Waste Control Commission and USFRS has been the critical factor in the company's success. State and local efforts to assist in capitalizing, siting and permitting the project were paramount in supporting the establishment of the central recovery facility in Minnesota. As mentioned previously[99], the lack of these same factors contributed to failure to establish similar facilities in Cleveland and New York/New Jersey. Plans to develop these facilities failed when plating operations withdrew their support of a central recovery facility in order to install on-site treatment to come into compliance with federal Clean Water Act regulations. By contrast, the significant commitment and flexibility of Minnesota allowed the central recovery facility project to develop.

Although Mr. Norgaard believes that other things being equal that on-site management and recovery of hazardous wastes is preferable to off-site management of these wastes, he also believes that effective on-site treatment and recovery is generally unaffordable to small businesses and that a central recovery facility can offer a series of comparative advantages over on-site management by the generator. He has stated that central recovery facilities can provide better assurance for compliance with federal and state regulations by entering into binding contracts with customers and inspecting customer operations on a regular schedule (this is standard USFRS practice). Second, central recovery facilities can provide technical and managerial assistance to small businesses that generate hazardous waste. Third, because of economies of scale, a central recovery facility can provide a variety of recovery alternatives that are not available with on-site management by generators. Finally, a central recovery facility is better able to find end uses for recovered materials. According to Tom Wentzler, senior vice-president of Tetra Technologies, generators of hazardous waste do not have the sales, marketing, distribution or transportation organization or experience to find end uses for their recovered products as well as an off-site recovery facility.[100]

Mr. Norgaard believes that a central recovery facility is fundamentally different from a commercial treatment, storage, disposal or recovery facility (TSDR). He stated to EPA that a central recovery facility is different in its method of operation in terms of its degree of involvement with its customer operations. Mr. Norgaard feels that TSDRs don't provide the day to day oversight into customer operations and offer the same degree of protection against the mismanagement of hazardous wastes at generator facilities or during transport.

Conclusion

USFRS represents an example of a commercially successful metal recovery operation that has developed largely through cooperative efforts between public and private parties. RCRA regulations do not appear to have significantly impeded the company's ability to recover metals from hazardous waste. RCRA has probably had a beneficial effect by providing markets for USFRS' services (i.e., hazardous waste treatment and disposal cost avoided). The critical regulatory factor in USFRS' success appears to be the cooperation and flexibility provided by the state and local governments. In particular, allowing civil penalties to be used for construction capital was essential in establishing the central recovery facility. Conversely, case histories in Cleveland and New York/New Jersey indicated that stringent enforcement of Clean Water Act regulations may have achieved faster compliance but perhaps at the expense of a better long term option for managing these hazardous wastes.

6.2 International Metals Reclamation Company, Inc., Ellwood City, PA

EPA selected the International Metals Reclamation Company, Inc., (Inmetco) as one of its case study respondents in order to analyze regulatory issues related to a commercially established pyrometallurgical operation. In addition, Inmetco has the distinction of being the only high temperature metals recovery facility in the United States that recovers nickel-cadmium batteries (and thus the only domestic reclamation facility for these materials that may be collected because of EPA's recently proposed Special Collection Rule, 58 FR 8102, February 11, 1993). Inmetco also recovers chromium, nickel and iron from emission control dust generated from electric arc furnaces in the stainless and specialty steel industries. Because the Office of Technology Assessment has identified chromium as a strategic material for the United States, EPA also selected Inmetco as a case study respondent to evaluate the regulatory impact of RCRA Subtitle C regulations on the firm's ferrochrome recovery.

History

The Inmetco Thermal Reduction Process was developed by Inmetco's parent company, Inco Limited, in the mid-1970's. Inmetco began commercial operation in 1978 in Ellwood City, Pennsylvania. The facility site is proximate to about half of the United States stainless steel producers and all ten of the nation's stainless steel producers are Inmetco customers. The company reported earnings of $2 million in 1991.[101] Inmetco applied to the state of Pennsylvania in 1983 for a Part A and in 1985 for a Part B hazardous waste storage permit. The state issued Inmetco its Part B storage permit in November 1992.

Process Description (Refer to Chart Next Page)

Inmetco uses a two stage pyrometallurgical process to smelt a variety of metal-bearing materials into a metal pig consisting of iron, chromium, nickel and other metals. This pig is then sold (or returned under a tolling agreement) to stainless steel producers for reuse in their process. The main feedstocks for the Inmetco process are emission control dust from electric arc furnaces (K061, a listed hazardous waste), mill scale from steel operations and grinding swarf (a mixture of grinding chips, abrasive particles and bond from grinding operations). Inmetco also uses a variety of other feedstocks including nickel-cadmium batteries, electroplating sludge (F006, a listed hazardous waste) and sludge generated from spent pickling solutions from steel finishing operations (K062, a listed hazardous waste when it is not lime stabilized).

The process itself uses a rotary hearth furnace to melt and partially reduce iron and nickel from an oxide into a base metal form and to reduce hexavalent chromium to the trivalent form. The process intermediate is transferred in a pellet form from the rotary hearth furnace to a stationary electric arc furnace for smelting and complete reduction. The process generates a metal pig (described above) and a slag.

In addition, two pollution control by-products are generated: a wastewater treatment filter cake from the wet scrubber on the rotary hearth furnace and a baghouse dust from the electric arc furnace. The slag is processed and sold as road bed aggregate and construction materials. Both pollution control byproducts are sent to Horsehead Resource Development for zinc, lead and cadmium recovery.

Figure 6.2 - Process Flow Diagram For Inmetco

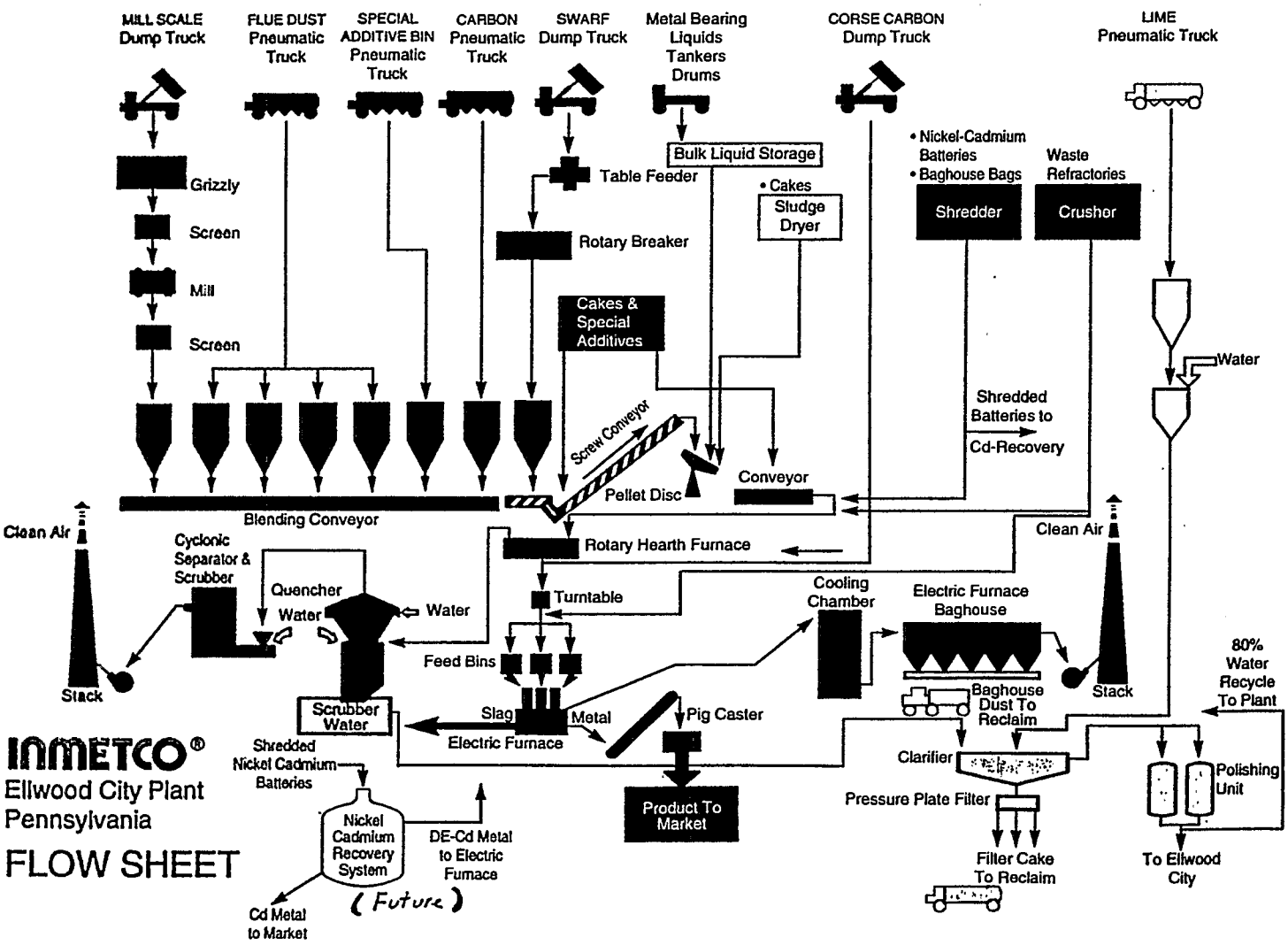

1992 Process Outputs At Inmetco, Ellwood City PA

Recovered Metals	22,000 tons of metal pig (including 15,000 tons of iron, 3240 tons of chromium, 2080 tons of nickel, 210 tons of molybdenum)
Slag	14,700 tons
Pollution Control Byproducts	6500 tons (including 1500 tons of zinc, 272 tons of lead, and 110 tons of cadmium)

Regulatory Issues & Analysis

In October 1991, Inmetco provided EPA detailed sampling and analysis results of its process inputs and outputs, pursuant to an agency-supervised Best Demonstrated Available Technology data gathering project.[102] More recently, Inmetco has communicated to EPA its view of the effect of RCRA Subtitle C regulations on its operations.[103] The company has also put forth a narrative proposal for setting up an alternative regulatory system for "hazardous reclaimable materials".[104] Finally, in response to Agency requests, Inmetco has developed an analysis comparing the risks and benefits of recycling metal-bearing hazardous wastes versus the risks and benefits of producing metals from virgin ores.[105]

In its submissions to the Agency, Inmetco has identified a number of RCRA Subtitle C regulatory issues that are of concern to the company, including slag management, permitting, facility-wide corrective action and financial assurance. The company believes that these issues are regulatory disincentives to metal recovery. The company has also identified notification of hazardous waste generation and management, a tracking system, appropriate storage standards and land disposal treatment standards for as generated waste as beneficial aspects of the RCRA program. The company believes that land disposal restrictions help create demand for metal recovery. However, Inmetco has stressed that RCRA land disposal restrictions can be counterproductive when in combination with the derived-from rule (40 CFR Part 261.3), they require metal recovery slags to be disposed of in Subtitle C landfills.

Derived-From Rule/Residual Management

Inmetco ranked potential slag management under EPA's derived-from rule (40 CFR Section 261.3) as the greatest regulatory impediment to metals recovery. During the Agency's visit to the Inmetco facility in December 1992, company representatives stated that their slag was being purchased for $6 to $8 a ton for use as road bed aggregate or construction material. The company reported to EPA that treatment and disposal of the slag as a hazardous waste under Subtitle C of RCRA would cost the company between $300 and $350 per ton for a total of $4-5 million a year total cost. Inmetco stated that this would have turned the company's 1991 profit into a loss.[106]

Inmetco reported in its response to an EPA trade association survey that the state of Pennsylvania's recently adopted PK-4 amendments to state hazardous waste regulations define "hazardous waste" more broadly than EPA's rules and appear to have a narrower exemption for waste-derived products used in a manner constituting disposal (40 CFR Section 266.20.). This is likely to place additional burdens on slag management. The company reported a 1992 expenditure of $900,000 to manage air pollution control dusts and wastewater treatment sludges. Inmetco estimates that this will increase to $1.2 million in 1993.

Permitting

The company has identified permitting as a major regulatory disincentive to metal recovery. Inmetco's storage permit cost the company an internal investment of $50,000 per year over 4 years and $200,000 in outside legal, engineering, laboratory and administrative costs. Pennsylvania state regional officials of the Department of Environmental Resources (PADER) responsible for permit oversight of Inmetco have questioned this estimate and indicated to EPA that early drafts of Inmetco's permit application were incomplete which was a contributing factor to the 5 year period of time required for the company to obtain permit approval.[107] Inmetco spends an additional $50,000 in labor expenses for a full time environmental technician to implement and ensure compliance with the storage permit requirements. In addition to permit application costs, Inmetco estimates that compliance expenditures to satisfy permit conditions include $3 million in capital expenditures.

Potential and prospective permitting issues for the company include becoming subject to Boiler and Industrial Furnace Permit requirements, 40 CFR Part 266 Subpart H and Pennsylvania state PK-4 regulations that require permits for the reclamation process. Based upon its experience in obtaining a storage permit, Inmetco estimated that obtaining each of these permits could cost $300,000 to $500,000 each which the company said was a significant disincentive to metal recovery.

Corrective Action

Inmetco ranked facility-wide corrective action as the third most serious regulatory impediment to metals recovery. Although the company did not attempt to estimate the potential compliance cost associated with corrective action, Inmetco does state that it represents a serious disincentive to investment in a new metals recovery operation or siting a facility at an existing manufacturing site. The company believes that undesirable social and environmental outcomes of this requirement might include siting a facility in a "greenfield" location (i.e., one without previous contamination) and creating a disincentive to invest in urban enterprise zones to create jobs and expand the tax base.

Financial Assurance & Legal Costs

Inmetco identified other regulatory issues of concern including financial assurance, stigma and legal costs associated with hazardous waste management. Financial assurance mechanisms for Inmetco include a $4 million irrevocable letter of credit and a $250,000 post-closure bond posted with the Pennsylvania Department of Environmental Resources. The company estimates its actual financial assurance cost at $55,000 annually. Although Inmetco could not quantify stigma, it does state that stigma requires additional time and money for community relations. Inmetco's legal fees for the last 5 years for assistance on regulatory and legislative changes were $750,000. This was in addition to legal fees incurred in connection with obtaining the facility's storage permit.

Inmetco has submitted to EPA its impressions of the opportunity cost of these regulatory expenditures. The company stated in its response to an EPA trade association survey that additional investment in high temperature metal recovery capacity is foregone in order for Inmetco to comply with its RCRA Subtitle C regulatory obligations. Inmetco has quantified nickel-bearing and chromium-bearing materials it believes are currently not being reclaimed due to inadequate reclamation capacity. These materials include[108]:

o	Nickel-Cadmium Batteries	10,000 - 20,000 Tons/yr.
o	Plating Wastes	30,000 Tons/yr.
o	Spent Chromium Refractories	25,000 Tons/yr.
o	Chromium Leather Tanning Wastes	10,000 Tons/yr.
o	Superalloy Slags	5000 Tons/yr.
o	Metal Catalysts	500 - 1,000 Tons/yr.
o	Ni-Cd Battery Production Sludges	450 Tons/yr.
o	Chromium Tailings (one time basis)	60,000 Tons

Inmetco also indicated in its response to an EPA trade association survey that if the company could expand capacity, it would be able to directly recover cadmium from Ni-Cd batteries, zinc and manganese from alkaline batteries, and copper, cobalt and vanadium from wastestreams containing those metals.

Inmetco estimates that it recovers about 1 ton of nickel, 1.55 tons of chromium and 7.2 tons of iron for every 27 tons of nickel-bearing secondary material that it processes. The company estimates that it would take 110 tons of virgin nickel-bearing sulfide ore to produce one ton of nickel. Secondary nickel recovery is more efficient because the nickel-bearing materials are more concentrated resulting in energy and material conservation and lower pollution for each ton of metal produced. Inmetco states that roughly 100 tons of tailings are produced for every ton of nickel recovered from virgin ores. By comparison, only 6.8 tons of slag are produced for every ton of nickel Inmetco recovers (or .6 tons of slag per ton of metal pig recovered).

Similarly, Inmetco reports that it uses less than half as much energy to produce a pound of nickel and chromium as its parent company uses to produce a pound of nickel and copper from virgin ore in Canada. Furthermore, Inmetco has recently installed a new water recycling program that has increased its use of recycled water by over 90 percent, and the company is striving to attain zero discharge of water within two years.

The ferrochrome and ferronickel that Inmetco recovers in its metal pig has value to the U.S. both as a commodity that may mitigate the U.S. balance of trade deficit and as a strategic material (for more on these issues see Chapter 7). Both nickel and chromium are imported metals. According to the 1993 Mineral Commodity Summaries published by the Bureau of Mines, 74 percent of the chromium and 64 percent of the nickel in the United States are imported, and much of the rest is produced by reclamation or reuse of secondary materials. In addition, the U.S. Office of Technology Assessment has identified chromium as a strategic material.[109]

Chromium is an ingredient in the production of stainless steel and other superalloy steels. According to the 1993 Bureau of Mines Mineral Commodity Summaries, chromium has no substitutes for superalloys, its main strategic use. Over 60 percent of imported U.S. chromium comes from South Africa or Zimbabwe. Currently about 26 percent of U.S. demand for chromium is satisfied through stainless steel scrap.

Inmetco has submitted a proposal to EPA to establish an alternative set of regulatory requirements for metal-bearing hazardous wastes that are destined for reclamation.[110] The company indicated in its submission that the proposal is one that they would consider acceptable if they were considering expansion of their metals recovery operation, but the company does not purport to speak for other metal recovery operations.

Inmetco's proposal starts with a definition of legitimate metals reclamation. According to the company, a legitimate recycler must recover material suitable for return to commerce as a product or feed material for an industrial process. Materials received at the facility would have to meet reclaimer specifications and be managed in a manner designed to minimize loss. The facility would retain records to document the receipt, processing and sale of products derived from secondary feed materials. Finally, at least one of the products recovered would have to be returned to commerce for a use that is not land applied and must meet specifications for use as a product or feed material.

Regulatory requirements for managing metal-bearing hazardous wastes destined for reclamation under the Inmetco proposal are as follows. First, such wastes would be defined as "hazardous reclaimable materials" to acknowledge that they are destined for reclamation and to avoid the stigma associated with the term "hazardous waste". Second, generators and reclaimers would notify EPA of their location, operation and material management activities. Third, materials destined for off-site reclamation would be manifested. Fourth, reclamation facilities would be subject to waste analysis requirements, security requirements, personnel training requirements, location standards for new facilities, and chemical accident prevention and preparedness activities.

Fifth, materials stored prior to reclamation would be subject to management standards based on existing container, tank or containment building standards. Sixth, owner/operators of reclamation facilities would be responsible for unit-specific closure and corrective action related to the reclamation process. Seventh, financial assurance requirements would reflect the more limited closure and corrective action responsibility and be based upon less conservative assumptions. Eighth, reclamation facilities would conduct testing, maintain records and allow inspections sufficient to demonstrate compliance with aforementioned standards. Finally, metal reclamation slags would be excluded from operation of the derived-from rule, so that they would not be restricted from use in roadbuilding or other construction applications provided they meet appropriate health based criteria. Inmetco believes that current generic exclusion levels for its slag are too conservative.

In evaluating the Inmetco proposal, it should be noted due to time and resource constraints that the Agency has not requested an audit of Inmetco's operation to verify company estimates of regulatory expenditures or to assess total compliance burden. Nor has EPA questioned the company about economic predictions related to market factors which could independently affect a business decision to expand HTMR capacity. Notwithstanding this, Inmetco has supplied EPA with specific estimates of its compliance burden and its best guess at what materials might be recovered in the event of regulatory modifications.

The trade off to society presented in this situation appears to be as follows. On the one hand, reducing regulatory burdens and associated costs on metals reclaimers will create an incentive (of unknown magnitude) to expand metals recovery capacity. Other things being equal, this is desirable, because metals reclamation conserves nonrenewable resources, reduces energy demands and pollution as compared to producing metal from virgin ore, keeps metal-bearing materials from being landfilled and serves our country's balance of payments and strategic interests.

On the other hand, depending on how RCRA Subtitle C regulations are modified, streamlining regulatory requirements for metal-bearing hazardous wastes being reclaimed could create some additional environmental risk beyond that which would exist if the materials were regulated in accordance with full Subtitle C hazardous waste requirements.

The uncertainty in answering Congress's question about optimizing RCRA's dual goals of environmental protection and resource conservation may relate to non-regulatory factors that affect the company's operation. Source reduction of chromium, material substitution for metal in products, expanded capacity outside of the United States for hazardous waste metal recovery and the end of the Cold War (and defense-related applications for chromium superalloys) may independently create market conditions that are unfavorable for company expansion. EPA cannot quantify the probability or extent of a metal recovery operation's increased investment or expansion due to specific changes in regulations simply because of market uncertainty. This does not mean that regulatory modifications to existing Subtitle C requirements would not be beneficial. It simply means that the Agency is unable to predict or forecast a market outcome from specific regulatory changes.

Conclusion

In contrast to the USFRS case study, the effects of RCRA Subtitle C regulation on Inmetco's operation appear to be mixed. Inmetco has been in operation since 1978 before RCRA Subtitle C regulations were promulgated. Since that time, electric arc furnace dust (K061) has been listed as a hazardous waste and land disposal restriction (LDR) standards based on high-temperature metals recovery have been promulgated. LDR standards for nickel-cadmium batteries specify metal recovery prior to land disposal. Most recently, EPA has proposed a new Part 273 regulation which would facilitate collection and transport of nickel-cadmium batteries for recovery. These changes have provided or would provide favorable market conditions for the recovery of these materials at Inmetco's operation.

Inmetco has stated by contrast that management of its slag, permitting costs and other previously mentioned regulatory requirements are disincentives to expanding metals recovery capacity at the company's facility in Ellwood City, PA. Inmetco feels that the Pennsylvania state PK-4 regulations may subject the facility to additional permitting requirements and more stringent management standards for the company's slag.

The impacts of these regulatory requirements are uncertain but may be substantial if company compliance burden estimates are accurate and depending on how the Pennsylvania regulations are implemented. Inmetco believes that regulatory modification to RCRA Subtitle C would provide an important incentive for the company to make the investments necessary to expand its operation. Because of the overlapping state and federal regulatory roles, Inmetco believes it is important to ensure that appropriate regulatory modifications at the federal level are matched by suitable actions at the state levels.

EPA is not certain of the extent of the incentive. Because of market factors affecting long term demand for metal commodities, regulatory modifications may be necessary but not sufficient to cause a significant increase in company investments in expanded metal recovery capacity. The net effect of RCRA Subtitle C regulations on Inmetco's operation appears to be mixed and somewhat uncertain for regulatory disincentives. The derived-from rule and management of the company's slag appear to be the leading regulatory issue for consideration.

6.3 Molten Metal Technology Inc., Waltham, MA

EPA selected Molten Metal Technology Inc. (MMT) of Waltham, Massachusetts as a case study in order to analyze regulatory issues related to an innovative metal recovery technology entering the marketplace. EPA wanted to analyze regulatory impacts of Subtitle C regulation on new firms using innovative technologies that are not commercially established. The MMT process has been selected for study in part because of: 1) the wide variety of potential feed materials processed and materials recovered, 2) the unique nature of the process (e.g., the company's description of the complete dissociation of materials injected into the process which may have aspects of both recycling and treatment depending upon the feed materials), 3) the operation of the firm's R&D facility under a state of Massachusetts "Recycling R&D" permit and 4). regulatory issues identified by MMT as impediments to metal recovery not often raised by the regulated community, but possibly acting as very serious disincentives. EPA believes that evaluating an innovative technology like MMT will help the Agency understand both the RCRA incentives and barriers to developing new technologies for metal recovery from hazardous waste.

History

The catalytic extraction process (CEP) used by MMT (described below) was developed by Dr. Christopher Nagel in 1986 while employed at U.S. Steel. Dr. Nagel developed CEP further during his stay at the Massachusetts Institute of Technology. Dr. Nagel developed CEP from traditional steel making technology.[111] MMT was formed November 1989[112] and owns the patent rights to the CEP.[113]

To develop the commercial applications of CEP, MMT has entered into business alliances with a number of firms. In 1990, MMT arranged $5 million in equity financing from Travelers Corp. of Hartford Connecticut. In April of 1992, Travelers committed an additional $10 million.[114] In April 1991, MMT and L'Air Liquide of France entered into a joint venture in which L'Air Liquide has committed over 50 people and $30 million. L'Air Liquide is also involved in research and sales in MMT. In May 1992, MMT reached agreement with Du Pont to perform technical assistance and marketing services.[115] Du Pont has also contributed $1.5 million and technical training for hazardous waste handling techniques.[116]

In May 1991, MMT announced an agreement with Rollins Environmental Services, a hazardous waste management firm, to participate in technical development of the CEP process. In October 1992, Rollins funded $1.2 million for a joint venture with MMT and provided two senior technical staff to explore treating halogenated and metal-bearing wastes.[117] Finally, in June 1991, MMT established a marketing agreement with Am-Re Managers, an environmental insurance company, to market MMT technology to Am-Re's client base. Am-Re has indicated interest on testing MMT technology on specific waste streams to reassure prospective clients of the technology's effectiveness[118].

MMT has completed construction of a $10 million, 36,000 square foot recycling research and development facility in Fall River, Massachusetts. EPA completed a site visit of the Fall River facility on January 26, 1993. The facility includes a 5 pound, 20 pound, 100 pound and a one ton CEP unit (note: CEP unit weight refers to the weight of molten metal in the unit). A commercial one ton CEP unit would be capable of processing 15,000 tons of solid waste per year. MMT is currently conducting treatability studies at the facility. The Massachusetts Department of Environmental Protection (MADEP) issued MMT permits to conduct treatability studies in August 1992 and February 1993. MADEP issued an operating air permit to MMT in December 1992. MADEP issued a R&D recycling permit to MMT in September 1993. As discussed below, MMT has quantified its permit application costs at over $300,000 exclusive of in-house expenses estimated by the company to be at least equal to that amount.[119] Approximately half of this estimate can be attributed to the R&D recycling permit. The regulatory issues surrounding that permit are discussed below. Because MMT does not intend to store materials at Fall River for which a RCRA storage permit is required prior to inserting them into its process, the company has not applied for a RCRA Part B storage permit.

Process Description (Refer to Chart Next Page)

MMT is developing and commercializing a type of process known as the Catalytic Extraction Process (CEP). The historical development of this process is described above. The CEP unit is based on a steel converter unit that is used to melt steel scrap. The CEP process differs from a steel converter in that the hood of the CEP unit is sealed and air tight to maintain a reducing environment.

Essentially, the CEP unit is a steel cylinder containing a molten metal bath (usually iron or in some cases nickel or other metals) that is maintained between 1320°c and 1925°c depending on the feed material. Feed materials, flux (to remove impurities) and oxygen are added into the bath from the bottom of the cylinder. Feed materials are gaseous, liquid, sludge or small particle solid feed. Specific wastestreams that MMT is looking at include PCB's, nickel acetate, aluminum potliners, spent nickel catalysts, incinerator ash, pesticides, transuranic wastes, flyash, municipal waste, and petroleum wastes.

These process inputs partition to the metal bath, the slag layer (referred to by MMT as the specialty inorganic phase) or the gas phase. As MMT literature describes it, organic constituents of feed materials dissociate into carbon monoxide and hydrogen. Nonvolatile metals partition to the metal bath. Inorganic elements like silicon and calcium are captured in the slag layer. MMT literature describes process outputs as the metal bath, vitreous material (slag), and recovered gases (H, CO).

The first step of the CEP process is to dissociate the feed into its elemental constituents and this may be thought of as "treatment". However, in most if not all applications, MMT has stated that the intended operation would "complete" the process by reconstituting these elements into useful products. Although there may be instances wherein based upon the particular feed material and/or the resultant products, the application may not qualify as "recycling", MMT believes that the principle intended applications include the production of useful products.

The fate and transport of hazardous constituents, such as lead or cadmium, from hazardous waste feedstocks is an important factor in evaluating both the legitimacy and safety of a metal recovery operation. MMT reports that all organic hazardous constituents are destroyed in the metal bath. Hazardous metal constituents would partition to the metal bath, the vitreous layer or the off-gas system depending upon the specific metal constituent and the operating conditions (including temperature) of the CEP unit. At the time of this writing, MMT is conducting trials to assess the optimal treatment and recovery conditions of their process for managing hazardous constituents of their CEP feed materials.

Figure 6.3 - Process Flow Diagram For MMT (process outputs are labeled from MMT literature)

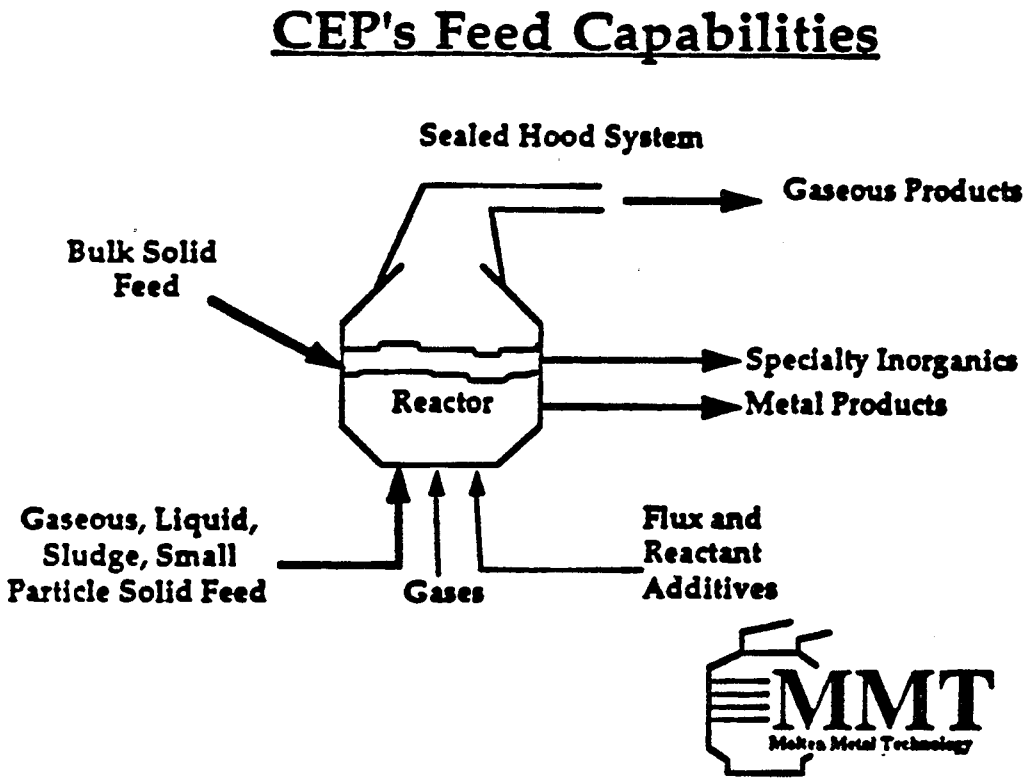

MMT has provided EPA with an example of how the CEP process can be applied to a metal-bearing hazardous waste stream, nickel-hydrocarbons and nickel catalysts. As discussed in Chapter 7, nickel is largely an imported metal. According to the Bureau of Mines, the United States imported roughly 64 percent of its nickel from Canada, Norway, Australia and others. Recovering nickel from metal-bearing hazardous waste may be one way to lessen the U.S. balance of trade deficit for mineral commodities.

Because the following description of the CEP process and nickel-bearing feedstocks in this example is provided by MMT to EPA, please note that EPA has not verified the facts stated in the description. Further, this example does not constitute an EPA endorsement of the CEP process. EPA does not endorse specific commercial processes.

MMT has stated that metal-containing feeds are particularly well suited for processing utilizing CEP technology. MMT has identified spent nickel catalysts and other nickel-hydrocarbon streams as prime examples and MMT has evaluated a number of these nickel streams. MMT has provided the following example of a nickel stream which it has evaluated; the nickel-hydrocarbon feed material contains about 12% nickel, 66% carbon and 5% hydrogen, with the remaining elements principally being oxygen, nitrogen and phosphorous, as well as trace amounts of other elements (such as 200 ppm of chlorine). This material, together with oxygen and flux (calcium oxide and alumina) are fed into a molten nickel bath.

MMT states that the process first dissociates all of the feed materials into their elemental constituents. Nickel is dissolved in the metal bath, with essentially all of it being recovered as high-quality metallurgical-grade nickel (e.g.; it contains less than 0.5% of impurities). MMT states that the carbon and hydrogen are converted and recovered as CO and H_2 which is commercial grade, gaseous Syngas product, and is suitable (as produced or after it is processed by conventional gas purification equipment) for use in the production of methanol, acetic acid and other chemical processes. Other elements present in the nickel-hydrocarbon feed are primarily partitioned to the vitreous or slag layer and recovered. This vitreous material is principally CaO, $Ca_2P_2O_5$, and P_2O_5 with trace amounts of other materials (e.g.;$CaCl_2$) which are securely bound in the vitreous lattice. MMT states that the material has sufficient physical properties to be used as commercial grade aggregate and possibly commercial grade abrasive.

MMT maintains that CEP applications such as these demonstrate that CEP is a bonafide environmentally sound recycling technology for several reasons. First, a mass balance for nickel-hydrocarbon feed material demonstrates that all or substantially of the feed constituents are converted into commercial grade products. Based upon the elemental composition of the nickel-hydrocarbon feed:

metal phase	2 molar % (i.e.; essentially 100%) is recovered as metallurgical grade nickel which is worth $6000/ton;
gaseous phase	97 molar % is recovered as commercial grade Syngas, which is worth $50-150/ton; and
vitreous phase	1 molar % of aggregate or abrasive which is worth between $5 and $30 per ton.

Second, the feed's principle toxic impurities (i.e., toxic organic compounds) are completely dissociated and converted to useful gaseous products (CO and H_2) comparable in composition and converted to other commercial grade Syngas and any inherently toxic materials (e.g., heavy metals) will either converted, recovered and/or placed in a benign form in the vitreous lattice. The vitreous material contains elements from the nickel-hydrocarbon feed, as well as elements from the flux and oxygen feeds. A relatively small amount of vitreous material is produced (approximately 1 ton of vitreous material for each 8.0 tons of nickel-feed). As a worst-case scenario, any vitreous material which did not meet product specification MMT maintains will pass TCLP and be a benign material.

Regulatory Issues & Analysis

RCRA Subtitle C regulatory requirements may affect new metal recovery operations that use innovative technologies differently than they impact commercially established metal recovery operations. New metal recovery operations that use innovative technologies are in the position of having a higher burden to demonstrate their potential effectiveness and safety to potential customers and regulators than many older, well known operations. Establishing the technical and economic feasibility of the operation may prove to be a greater challenge than for a commercially established operation. RCRA Subtitle C regulatory provisions that may have a greater effect upon innovative metal recovery technologies include certain application and permit issuance requirements for research, development and demonstration permits (40 CFR Section 270.65), and exclusion of samples undergoing treatability studies from RCRA Subtitle C regulation including the 250 kilogram limit on waste processing within a 24 hour period (40 CFR Section 261.4(f).

Regulatory determinations on the legitimacy of the process (i.e., whether the operation is in fact recycling or merely treatment) may also be more problematic for innovative metal recovery technologies due to the regulator's lack of familiarity with both the "process" and the "product" of an innovative technology. In contrast, facility-wide corrective action may have a lesser impact on a testing facility for an innovative technology than a commercially established recycling operation because the latter may have a more difficult time siting the facility. Finally, RCRA Subtitle C permitting requirements appear to affect both types of operations.

Under its regulations at 310 CMR 30.200, the Commonwealth of Massachusetts regulates recycling materials which EPA does not regulate as "solid wastes" (e.g. characteristic sludges and by-products being reclaimed). These materials are regulated by MADEP as Class A regulated recyclable materials. Regulated recyclable materials which EPA does consider as solid/hazardous wastes are generally regulated as Class C regulated recyclable materials. MADEP requires RCRA storage permitting for Class C material, but not for Class A.

MMT has identified a series of RCRA Subtitle C regulatory requirements and exclusions as incentives or disincentives to metal recovery for innovative technologies becoming commercially established. RCRA **incentives** include land disposal restriction (LDR) requirements for metal-bearing hazardous waste, treatability study exclusions from RCRA Subtitle C regulation, closed-loop recycling exclusions to the definition of solid waste, regulatory exclusions for totally-enclosed treatment facilities, and the general exclusion for the recycling process. RCRA **disincentives** for metal recovery for innovative technologies becoming commercially established include technology-based LDR treatment standards (i.e., where a specific technology must be used), permit requirements for storage prior to reclamation, the absence of a research, development and demonstration permit that will encourage recycling operations, and establishing the legitimacy of a reclamation operation.

Land Disposal Restrictions (as an incentive)

MMT reiterated the belief of many metal recovery operations that the land disposal restrictions treatment standards (40 CFR §§ 268.41-43) create favorable market conditions for recovering metals from hazardous wastes. Part 268 does this either directly by specifying metal recovery as the required treatment for recycled wastes prior to land disposal (e.g., spent-lead acid batteries, nickel-cadmium batteries, high category mercury-bearing wastes) or indirectly by raising treatment and disposal costs of metal-bearing hazardous waste.

Treatability Exemption

The second RCRA regulatory incentive MMT identified for metal recovery for innovative technologies is the exemption for treatability studies for testing facilities (40 CFR 261.4(f)). Testing facilities conducting treatability studies on hazardous waste are exempted under this provision from substantially all RCRA Subtitle C regulatory requirements (Parts 124, 262-266, 268, 270 and Section 3010 RCRA notification). This incentive is limited by the 250 kilogram per day limit on the quantity of hazardous waste that can be tested at the facility (40 CFR Section 261.4(f)(3)). The difficulty created by this limitation according to MMT is that processing only 250 kilograms of material per day is insufficient to demonstrate the feasibility of the CEP process for many feedstocks.

MMT has stated that 250 kilograms of feed material is insufficient because of lack of sufficient test duration and the inadequate test data that results. This creates two problems.[120]

First, because the state of Massachusetts administers research and development recycling permits, the state authorized MMT to conduct treatability studies in August 1992 and February 1993. The state has conditioned issuance of the R&D recycling certifications on satisfactory results during the treatability studies; the 250 kg limit makes gathering satisfactory data difficult. MMT maintains that 250 kg. is simply too small an amount to reasonably demonstrate CEP's applicability to particular material streams. For example, in the 1-ton unit, 250 kg would allow only about 1-2 hours of operation. For most applications, this would be an insufficient time for reliable steady state demonstrations of the quality of the recovered resources, accurate mass balances, process economics, etc.

Second, the 250 kilogram limit makes it difficult for MMT to demonstrate to the potential customers the technical and economic efficiency of the process. At the time of this writing, EPA is proposing a regulation to increase the daily 250 kilogram limit for some hazardous wastes (i.e., contaminated soil and debris).

Closed-Loop Exclusion/Totally Enclosed Exemption

MMT in its literature identifies both the closed-loop recycling provision (40 CFR Section 261.4(a)(8)) and the totally enclosed treatment provision (40 CFR Section 264.1(g)(5)) as possible incentives for its operation. The closed-loop recycling provision excludes secondary materials from the definition of solid waste if they are reclaimed and returned to the production process in which they were generated and reused within the production provided that 1) only tank storage is involved and the entire process through reclamation is enclosed through pipe or similar means, 2) reclamation does not involve controlled flame combustion, 3) secondary materials are not stored in tanks longer than 12 months without being reclaimed and 4) the reclaimed material is not used to produce a fuel or used in a manner constituting disposal.

The totally enclosed treatment provision exempts owner/operators from RCRA permitting standards (40 CFR Part 264) that operate facilities that meet the definition of a total enclosed treatment facility as defined in 40 CFR Section 260.10. Under federal regulations a totally enclosed treatment facility is defined as one that is directly connected to an industrial production process, which is constructed and operated in a manner which prevents the release of any hazardous waste or constituent into the environment during treatment (40 CFR Section 260.10). EPA is not commenting at this time on the prospective application of either of these provisions to the MMT process.

Recycling Exclusion

The final RCRA Subtitle C regulatory incentive identified by MMT is the general regulatory exclusion for the recycling process, 40 CFR Section 261.6(c). This provision states that in general that the recycling process itself is not regulated. This would mean that metal recovery operations that do not store prior to reclamation would not be subject to RCRA permit requirements nor the facility-wide corrective action requirements and financial assurance requirements that have been identified as serious regulatory impediments to metal recovery from hazardous wastes.

Evaluation of how the RCRA regulations apply to a "recycling process" requires a determination of whether the process involves "use/reuse" and/or "reclamation" of materials. Under RCRA, a material is "recycled" if it is used, reused or reclaimed. 40 CFR Section 261.1(c)(7). "Used or reused" means "employed as an ingredient in an industrial process to make a product...however, a material will not satisfy this condition if distinct components of the material are recovered as separate end products (as when metals are recovered from metal-containing secondary materials)". 40 CFR Section 261.1(c)(5). "Reclaimed" means "processed to recover a usable product or regenerated". 40 CFR 261.(c)(4).

In many CEP applications, MMT states the organic and non-metallic inorganic components of the feed materials would be dissolved into their elemental constituents and transformed into new materials--specifically, gases such as CO and H_2 and specialty inorganic compounds. MMT states that in these applications, except for any metals in the feed, there is no recovery of distinct components in the CEP feed material because the components have all been dissolved into their elemental constituents. Thus, MMT believes non-metallic CEP feed materials may be considered to be used or reused in an industrial process to make a product without being reclaimed.

If secondary materials are recycled by being used or reused to make a product; the secondary materials would be excluded from the definition of solid waste under 40 CFR 261.2(e)(1)(i), and so the feed materials would not be subject to RCRA storage permit requirements. Also, the recycling process would not be subject to RCRA hazardous waste regulations.

Finally, any residuals from the process would not be subject to the "derived-from" rule which may be a significant impediment for many innovative technologies. As a result, MMT believes that classification of specific CEP applications as use or reuse recycling would provide a significant incentive for the use of the technology. EPA is not commenting at this time on the prospective application of the "use/reuse" provisions of the Subtitle C regulations, 40 261.2(e)(1), to the MMT process.

For waste feeds containing metals, metal components of the feed may be recovered. Thus, with respect to the metal recovery from those feeds, CEP looks more like reclamation because an identifiable component of the feed is recovered. However, if valuable gases and/or specialty inorganics are also produced, use or reuse of CEP feeds may be occurring at the same time that metal components of the feed are recovered. Even if a CEP unit recovering metals is classified as a reclamation process, the CEP unit itself could still be exempt from RCRA regulation[121] (recall that under RCRA Subtitle C, the recycling process is generally exempt from regulation. 40 CFR §261.6(c)(1)), although CEP feeds and process residuals could be subject to RCRA regulation.

Storage Permit Requirements

As with other case study respondents, MMT has identified RCRA Subtitle C permitting as a disincentive to metal recovery from hazardous wastes. Requiring a storage permit could be a concern to the company. The issue of whether or not a treatment permit is required will be discussed below under the issue of legitimacy. As mentioned above, MMT does not store Massachusetts Class C regulated recyclable materials prior to reclamation at the Fall River facility and so has not applied for a storage permit. Nevertheless, storage permit requirements may become an issue for prospective CEP operations where storage prior to reclamation may be necessary.

Also, MMT's concern about the lack of a definition of storage was mentioned during EPA's site visit to the Fall River facility on January 26, 1993. During that visit, MMT showed gravity feed bins (Flo-Bins) that would be used to put feed materials into the CEP process. The EPA representative asked whether or not materials would be accumulated in these bins for prolonged periods of time prior to insertion into the reclamation process. MMT representatives responded that there would be two bins used in a continuous process mode and that while one bin was in use that the other bin would be filled and prepared for use. Thus, the fact that there is no federal definition and many different state definitions for how long a material may be accumulated on site without being considered to constitute storage represents a source of regulatory uncertainty for MMT.

Research, Development and Demonstration Permit

MMT has also stated that the difficulty in obtaining a federal research, development and demonstration permit program that encourages innovative recycling technologies is a major impediment for innovative metal recovery technologies entering the market place. Both MMT and MADEP have noted the difficulty in obtaining a research, development and demonstration permit (RD&D) for recycling at the federal level under RCRA although such a permit exists for treatment and disposal.[122] MMT also identified this difficulty as a specific impediment for innovation metal recovery technologies that are becoming commercially established.

While the recycling process in general is not regulated under RCRA (40 CFR Section 261.6(c)(1)), a research and development permit for recycling could benefit recycling operations that store prior to reclamation. Normally, the benefit to recipients of federal RD&D permits at the federal level is that the Administrator of EPA may issue these permits without many of the Part 124 or 270 permit application or issuance requirements (40 CFR Section 270.65). MMT rejected applying for this type of RD&D permit because of the time and resource commitment for applicants and uncertainty of approval. MMT's specific concerns included the RD&D permit's limited duration (1 year with limited renewals), the reportedly difficult and lengthy permitting process and the focus on demonstrating experimental treatment technologies generally, not the application of a recycling technology to specific materials streams.

Land Disposal Restrictions (as a disincentive)

As noted above, the Land Disposal Restrictions (LDR) provide regulatory incentives that help to create a market for innovative metal recovery technologies. The LDR may also create disincentives for using new technologies. The LDR provide that hazardous wastes or residues may not be disposed on the land unless they meet the Best Demonstrated Available Technology (BDAT) standards specified in 40 CFR §268 1) a specific technology or 2) a concentration based level that is not technology specific. EPA recognizes that concentration-based BDAT standards (which may be achieved using any suitable technology) encourage technological innovation. Nevertheless, some BDAT standards that are technology-based create disincentives for new technologies.

In certain applications, a CEP unit may produce not only valuable products, but also a non-salable residue that must be disposed. Disposal of this material (that MMT believes would not exceed TCLP standards) may be complicated if it is considered a derived-from waste for which there is an existing technology-based standard that by definition CEP would not meet. In this case both the derived-from rule and the technology based BDAT standards could be disincentives to use of CEP technology.

Legitimate Recycling

Another RCRA regulatory disincentive that MMT identified is the lack of specific established criteria for legitimate "recycling" (existing criteria is somewhat vague) to determine whether or not MMT is a legitimate R&D recycler rather than a sham recycler (e.g., one that actually treats rather than recycles). MADEP provided a draft R&D recycling permit to EPA Region I for review that conditions issuance of a recycling R&D certification for MMT on an economic test. The economic test specified that the value of the material recovered is equal to or greater than the operating cost of processing it.[123] MMT maintained that economics should be a relevant factor, but not the sole determining factor. The company also maintained that an economic test should not be the sole measure of legitimate recycling because the benefits of recycling include avoided cost of disposal and avoided future liability.

If a narrow legitimacy test were applied and the CEP process was unable to meet it, the company's R&D recycling demonstrations would be restricted to a smaller class of materials. Additionally, commercial operations which could not pass the test would be regulated as a treatment facilities rather than a recycling facility. As a commercial treatment process, it would be subject to all federal treatment standards and permit requirements. The CEP facility would also be subject to facility-wide corrective action and financial assurance requirements. Although EPA does consider economics as a factor in determining legitimacy[124], there is currently no economic test for legitimacy under federal RCRA rules.

MADEP reconsidered the issue and sought additional input (including that of an economic consultant) and eventually concluded that it was not possible to make a recycling determination solely on the basis of an economic test. The final permit specifies subjective criteria that MADEP will use to determine if a specific waste stream is legitimately recyclable using CEP. The criteria include whether the CEP products are "commodity-like', the relative recovery of products versus waste residuals, and the toxicity and risk associated with CEP products and waste residuals.

In attempting to evaluate the regulatory effects of RCRA Subtitle C on MMT and CEP, it is apparent that both the versatility of the MMT process and the diversity of potential hazardous and non-hazardous wastes processed represent both an opportunity for substantial innovation in hazardous waste treatment or recovery and a source of difficulty for federal and state regulators trying to determine the regulatory status of the MMT process.

The MMT process is unique. Other pyrometallurgical metal recovery operations heat the feed in an oxygen, oxidizing environment rather than a metal bath, reducing environment. Operating temperatures for the MMT process may vary by 600°c depending on the feed material. This variability in temperature can change the fate and transport of hazardous constituents in the MMT process. For example, at the higher operating temperatures, lead will volatilize and be recovered in the off-gas stream. At lower operating temperatures, some of the lead may partition to the slag layer.

The metal bath is usually iron or steel, but may be nickel, cobalt or other metal depending upon the needs of the customer. And in contrast to metal recovery operations that specialize in one waste stream, CEP is potentially applicable to a variety of feedstocks ranging from incinerator ash to nickel catalysts.

The versatility of the MMT process and diversity of wastes processed may eventually foster the recovery of metal-bearing wastes that have heretofore not been amenable to recovery either because they were too contaminated or too dilute in metal content to be cost-effective. At the same time, state and federal regulatory officials evaluating the MMT process may have difficulty assessing the regulatory status of the operation under the current RCRA Subtitle C regulatory framework. EPA has said that in order to assess the intent of the owner/operator regarding the legitimacy of the process it is necessary to evaluate the circumstantial evidence of the process.[125]

The versatility and diversity of the MMT process presents many challenges to a regulator trying to characterize it. In some applications, the MMT process may look more like traditional treatment than recovery (e.g. processing an organic waste that does not recover either hydrocarbons or metals as a separate end products). In other applications, the process may more closely resemble a traditional metal recovery technology (e.g., recovering nickel from a spent nickel catalyst as a ferronickel alloy).

The challenge to the regulatory agency in evaluating a firm like MMT is to find a way to encourage this type of innovation without compromising agency standards for identifying legitimate recycling and protecting the environment. This is not easy when a technology does not fall neatly into any of the categories created by the regulatory scheme.

Conclusion

As of May 1994, MMT had begun its commercial introduction of its CEP technology in the marketplace. The company has contracts in place with a diverse group of clients for four commercial facilities utilizing its technology. Compared with many pilot and bench scale innovative recycling technologies trying to become established on a commercial scale, MMT is relatively well-capitalized and supported by corporate partners and investors. Thus, the company be better able than smaller firms to overcome regulatory disincentives to recycling.

To date, the effects of RCRA Subtitle C regulation on MMT have been mixed. The company has clearly benefited from markets for recoverable metal-bearing hazardous waste created by Subtitle C regulation and regulatory exclusions and exemptions for the recycling process and testing facilities conducting treatability studies. At the same time, the lack of certainty surrounding the company's permitting status and the technical limitations for conducting recycling demonstrations have constrained the company's ability to develop more quickly.

Again, as with the other case studies, it is difficult to assess the proper level of RCRA Subtitle C regulation for MMT and other innovative technologies to optimize RCRA's dual objectives of environmental protection and resource conservation. With MMT, it is all the more difficult because of the versatility of the process and diversity of hazardous wastes processed.

EPA is examining how its regulations affect the innovation of technologies that recover metals from hazardous wastes. In 1990, EPA recognized that its RD&D permitting program has not been streamlined to encourage technological innovation.[126] As mentioned above, the Agency is also proposing a rule to modify its treatability exemption for testing facilities.

EPA has also recently encouraged innovative technologies for treating electric arc furnace dust (K061) by specifying treatments standards based on high-temperature metal recovery (HTMR) and establishing generic exclusion levels for HTMR residuals managed in Subtitle D landfills.[127] This case study will support existing Agency efforts to meet this goal by providing insight into which RCRA Subtitle C regulatory provisions are disincentives to innovative recovery technologies.

6.4 Horsehead Resource Development Company, Inc.[128]

This case study is written solely to familiarize the reader with the processes involved in a specific metal recovery operation (Horsehead Resource Development Company, Inc. (HRD)) and to present the company's view of how, based on its experience, the RCRA hazardous waste regulations affect such metal recovery operations. This case study discusses very complex issues in simplified terms, using general statements about the hazardous waste regulations that may not accurately reflect the regulations applicable to a specific situation. In addition, EPA and the Pennsylvania Department of Environmental Resources are currently involved in enforcement proceedings against HRD regarding the status of certain operations and materials under RCRA. Nothing in this case study should be taken to represent the Environmental Protection Agency's position or interpretation of the regulatory status of particular materials, activities, or facilities. Finally, the terminology used in this case study is based on the federal regulations and should not be construed to have any meaning in the context of Pennsylvania state law or regulations.

Horsehead Resource Development Company, Inc. (HRD) was selected for a case study because it is one of the largest and most established operations currently recovering[129] metal from hazardous waste in the country. HRD is also illustrative of several other issues in that HRD has a number of facilities located in different states throughout the country, and HRD's recovery process consists of a number of steps, some of which are conducted sequentially at several of these facilities.

HRD recovers zinc (and smaller quantities of other metals) from electric arc furnace dust, an air pollution control dust generated in the production of steel in electric arc furnaces (EAFs). Electric arc furnace dust has been listed as hazardous waste K061. EAFs are smaller than other steelmaking furnaces and use scrap steel rather than molten pig iron as the main feed stock. Technological improvements and the availability of scrap steel have increased the number of EAFs in use, which in 1992 made up approximately 38 percent of U.S. steel production capacity. It is projected that by the year 2000, EAFs may represent 45 to 50 percent of the national steelmaking capacity.[130] In 1992 it is estimated that 550,000 tons of EAF dust were generated in the United States.

In 1992, HRD processed 376,000 tons of EAF dust, which is approximately 68 percent of the EAF dust generated domestically. From that EAF dust (and 9,000 tons of other metal bearing wastes) HRD produced 120,000 tons of zinc calcine (from which zinc metal is refined at primary smelters) and 19,000 tons of lead concentrate. This quantity of zinc calcine represents approximately 25 percent of the U.S. zinc concentrate market.

HRD estimates that its recovery processes reduce the landfill capacity necessary for disposal of EAF dust in the United States by approximately 57 percent.[131] HRD further estimates that its recovery processes replace the mining of approximately 1.5 million tons of zinc-containing ore, 300,000 tons of lead-containing ore, and smaller quantities of copper- and silver-containing ore. HRD's processes also recover over 200,000 tons of iron units, roughly 30 percent of which are used in applications that replace the use of other iron sources. Further, this replaced mining activity reduces the mine tailings that would be generated to obtain the same quantities of these minerals from primary production by close to 2 million tons. Sulfur dioxide emissions are also reduced because HRD's sulfur emissions are low and HRD's zinc calcine is low in sulfur compared to zinc concentrates from primary sources. HRD obtains roughly half of its revenues from selling the recovered zinc calcine (and other recovered products). The remaining half comes from the fees paid by EAF generators (steel mills) for the recycling service.

History

Palmerton, Pennsylvania

HRD's oldest facility is located in Palmerton, Pennsylvania on part of the original site of a primary zinc smelter that operated from 1898 to 1980. Zinc concentrates from captive and third-party mines were shipped by train and truck to the smelter in Palmerton, which is located in a coal producing region. In 1929, a pyrometallurgical process utilizing inclined horizontal rotary kilns known as Waelz kilns (from the German word "walzen," which means to trundle or roll) was instituted at the Palmerton facility to process unique zinc ores from captive New Jersey mines. In 1979, EAF dusts were first processed in the Waelz kilns to replace zinc ores as the New Jersey mines began to be depleted. The quantity of EAF dust reclaimed increased over time until 1986, when the New Jersey mines were closed and EAF dust and other secondary feeds became the sole input to the Waelz kilns.

It should be noted that the Environmental Protection Agency listed EAF dust as hazardous waste K061 under the RCRA regulations in 1980 due to its content of lead, cadmium, and hexavalent chromium. Although this regulation became effective over time in various states as each incorporated it into its own regulatory program, the end result was that generators of EAF dust were required to send the waste to a RCRA permitted or interim status treatment or disposal facility. In the case of EAF dust, management options included hazardous waste landfills or recycling operations such as HRD.

In 1986, a second pyrometallurgical recovery step known as calcining was added at the Palmerton facility to further concentrate the crude zinc oxide (CZO) produced in Waelz kilns. Currently, materials are recovered at the Palmerton facility in five kilns (two Waelz kilns, two calcine kilns, and one kiln that can be used for either operation). The HRD Palmerton facility has been storing hazardous wastes under RCRA interim status and is currently involved in litigation with the Pennsylvania Department of Environmental Resources concerning a final RCRA permit.

The Palmerton facility was owned until 1966 by The New Jersey Zinc Company, Inc., then by Gulf + Western Industries, Inc. (now Paramount Communications, Inc.), and was purchased in 1981 by Horsehead Industries, Inc. (HII). In 1986, HRD was created from an existing division of HII and took over the Waelzing operation and the portion of the facility on which the kilns are located. Currently, 45 percent of HRD is owned by HII, 45 percent is owned by Berzelius Umwelt Service AG (a subsidiary of the German company Metallgesellschaft AG), and 10 percent is publicly held.

Chicago, Illinois

In 1988 HRD began Waelzing operations at its second location in Chicago, Illinois. The facility had originally been a petroleum coke calcining plant owned by Great Lakes Carbon Corporation, an HRD affiliate company from which HRD purchased the site. One of the existing petroleum coke calcining kilns was converted to a Waelz kiln. HRD plans to begin operating a second Waelz kiln at the Chicago facility in the first quarter of 1994. Under the State of Illinois's RCRA program, EAF dust recovered at the Chicago plant is considered to be processed immediately upon delivery (i.e., is not considered to be stored on-site) and thus HRD is not required to obtain a RCRA permit for this facility.[132] The facility has air permits for its air emissions.

Rockwood, Tennessee

In December of 1990 HRD began Waelz operations at its third location in Rockwood, Tennessee. Previously a direct reduced iron plant and then a carbon char plant, HRD was able to convert the existing kiln at the plant to a Waelz kiln. Similar to the Chicago plant, under Tennessee's RCRA program HRD is not considered to be storing EAF dust prior to recovery and is thus not required to obtain a RCRA permit for the Rockwood plant. The facility is permitted for air emissions.

Joint Venture: Bartlesville, Oklahoma

In 1988 HRD formed a joint venture with Zinc Corporation of America (ZCA), an unincorporated division of HII, to develop a hydrometallurgical operation to further recover a lead concentrate produced in EAF dust recovery at Palmerton. The purpose for developing the process was to recover a higher quality (maximum value) lead product than was possible with other recycling options. A full-scale plant constructed at a ZCA facility in Bartlesville, Oklahoma has been slow to become fully operational, a difficulty HRD ascribes to a lack of pilot-scale research pushed by a concern on the part of the Pennsylvania Department of Environmental Resources that lead concentrate not be stored at the Palmerton facility for long periods of time while the Bartlesville plant was constructed. Due to a State of Oklahoma court determination that the lead concentrate is not a listed waste under the State's RCRA program, and a State recycling exemption, the Bartlesville plant is not required to obtain a RCRA permit.

Monaca, Pennsylvania

In 1987 HII purchased a division of the St. Joe Minerals Corporation and with this purchase also obtained a new pyrometallurgical metal recovery technology that St. Joe had been researching since the mid-1970s. The process is known as flame reactor flash smelting. St. Joe had constructed a pilot-scale flame reactor unit at a facility in Monaca, Pennsylvania in 1982. The flame reactor technology was conveyed to HRD, who continues to conduct research on the uses and operations of the technology at the Monaca plant which operates under a RCRA Research, Development, and Demonstration permit issued by EPA Region III in Philadelphia.

Beaumont, Texas

In June of 1993, HRD began operation of its first full-scale flame reactor recovering metal from wastes. (The technology has previously been licensed to a U.S. company for a non-waste application.) The plant was constructed on-site at an electric arc steel mill in Beaumont, Texas, owned by North Star Steel, Inc. The flame reactor technology is being used to recover EAF dust generated by North Star and by other nearby steel mills into a material similar to the crude zinc oxide produced in Waelzing. Compared to the Waelz process, the flame reactor technology requires much lower capital investment to construct and a smaller volume of input waste materials to operate economically.

Process Description[133]

As in a primary metal production process, each step in HRD's metal recovery process further concentrates the metals that are to be recovered, including zinc, lead, and cadmium. It should be noted that this also means that the hazardous constituents in the EAF dust (e.g., lead, cadmium) are concentrated further at each step.

HRD's recovery process can generally be described as: 1) the original multi-step process used to recover zinc and other metals from EAF dust, and 2) the flame reactor, a relatively new alternative to the first step in the original process. The original process steps consist of the pyrometallurgical Waelz kiln, the pyrometallurgical calcine kiln, and the hydrometallurgical lead concentrate process. The alternative step, the flame reactor, can replace the Waelz kiln step. In addition, HRD is recycling other non-EAF dust wastes in relatively small quantities through the original process together with EAF dusts, and is exploring options for recycling other wastes using the flame reactor technology either with or without EAF dusts.

Figure 6.4 is a simplified process flow diagram for the first two steps in the original process (Waelzing and calcining). Figure 6.5 illustrates in more detail these two steps as conducted at the Palmerton, Pennsylvania plant. For comparison, Figure 6.6 illustrates the process at the Chicago, Illinois facility, where, as at the Rockwood, Tennessee facility, only Waelzing is conducted.

EAF dust, which typically contains 20 percent zinc, is first received from off-site in trucks or rail cars at HRD's Palmerton, Pennsylvania, Chicago, Illinois, and Rockwood, Tennessee facilities. The dust is unloaded in a receiving building, which is designed differently at each of the three facilities. HRD has upgraded the design of materials handling equipment in the receiving buildings over time as each new building was constructed, partly to improve materials handling and partly to meet Occupational Safety and Health Administration (OSHA) requirements. Prior to being fed into the Waelz kiln, the dust is conditioned by hydration to achieve a free moisture content of about 10 percent, and mixed with coal or coke, and fluxes. Approximately one ton of coal is used for each four tons of EAF dust.

This conditioned mixture is then fed to the Waelz kiln. A Waelz kiln is an inclined horizontal rotary kiln ranging from 160 to 180 feet in length and 10 to 12 feet in internal diameter. The kiln is inclined slightly downward from the feed end with a slope of about one inch per four feet of length. The kiln rotates at a speed of about thirty rotations per hour, and together the incline and the rotation move the feed slowly down the kiln to the discharge end. Residence time for material that moves through the entire kiln is approximately two and a half hours.

As the conditioned EAF dust mixture moves down the kiln it is first dried, and then heated until the coal or coke begins to burn, which eventually raises the temperature of the mixture to 1,100 °C or higher. The burning of carbon (from the coal or coke) in the kiln reduces most of the zinc, cadmium, and lead in the EAF dust to metallic form. These metals volatilize, and are pulled out of the kiln in a gas stream. The metals are reoxidized and captured as particulate in a collector.

The collected particulate is known as crude zinc oxide (CZO), which contains approximately 55 percent zinc. At Chicago and Rockwood, the CZO is pneumatically transferred to railcars and shipped to Palmerton. Some CZO is sold directly to customers. Inert materials are discharged from the kiln and cooled to form a non-vitrified slag that is approximately 45 percent iron and is known as Iron Rich Material (IRM). The IRM is sold for use in cement production (as an iron additive), as construction aggregate, asphalt aggregate, anti-skid material for roadways, on-lot sewage treatment media, and ion exchange water-filtration media.

At Palmerton, CZO from the Waelz kilns at Palmerton, Chicago, and Rockwood (and from the flame reactor described below) is consolidated, and then fed to a calcine kiln. A calcine kiln is similar in size and operation to a Waelz kiln, except that natural gas heat is supplied at the lower end of the kiln to raise the temperatures to between 700 and 1,000 °C, and no coal is added.

Figure 6.4 - Simplified Process Flow Diagram, Waelzing and Calcining

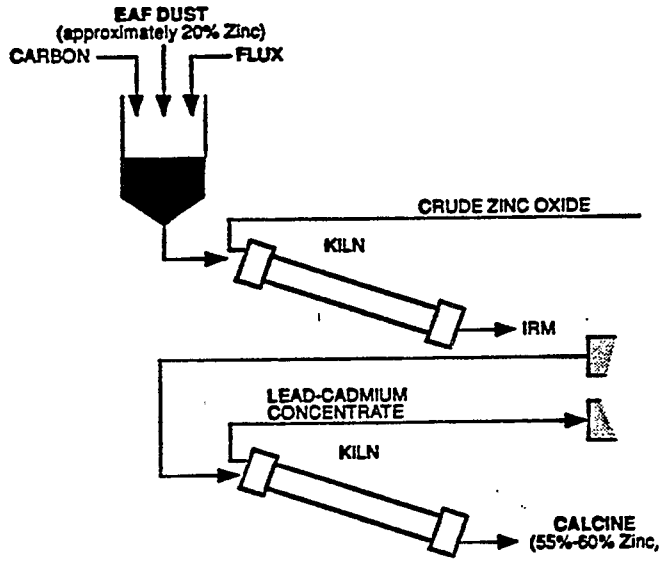

Source: <u>Horsehead Resources Development, EAF Recycling Stalwart Expands Within and Beyond its Core Business</u>, EI Digest, Environmental Information Ltd., May 1991.

As the CZO moves down the calcine kiln, the purity of zinc oxide is increased by selective volatilization of lead, cadmium, and other minor constituents, which are pulled out of the kiln in a gas stream. These constituents are captured in a collector as particulate, resulting in a material known as lead concentrate. This concentrate, which consists of 30 - 40 percent lead and 1 - 2 percent cadmium, is sacked and shipped by rail to the ZCA-HRD joint venture facility at Bartlesville, Oklahoma.

The remaining zinc oxide is discharged from the lower end of the calcine kiln, in the form of zinc calcine, which is approximately 60 - 65 percent zinc. The zinc calcine is sold to ZCA, which uses it as feedstock for its primary zinc smelters. The zinc calcine serves as a substitute for zinc concentrate feedstocks at smelters. An advantage of the calcine over zinc concentrates, however, is that the calcine is low in cadmium, lead, sulfur, and other metallic impurities normally found in concentrates. As a consequence it can be introduced near the end of the smelting process, rather than at the beginning. This has both economic and environmental benefits for the smelter.

Figure 6.5 - Detailed Schematic Process Flow Diagram, Palmerton, PA Facility (Waelz and Calcine kilns)

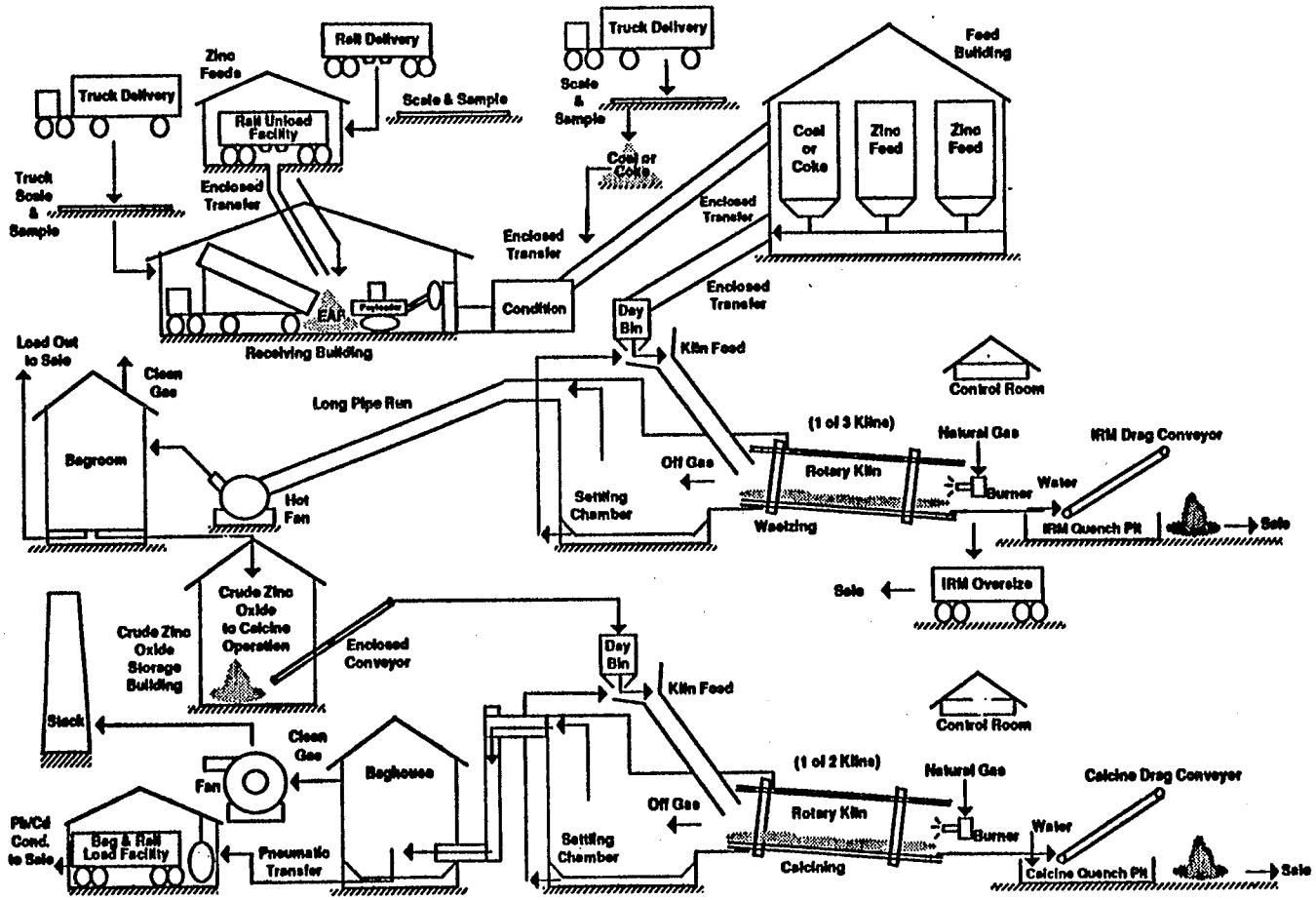

Source: Horsehead Development Company, Inc.

Figure 6.6 - Detailed Schematic Process Flow Diagram, Chicago, IL Facility (Waelz kiln only)

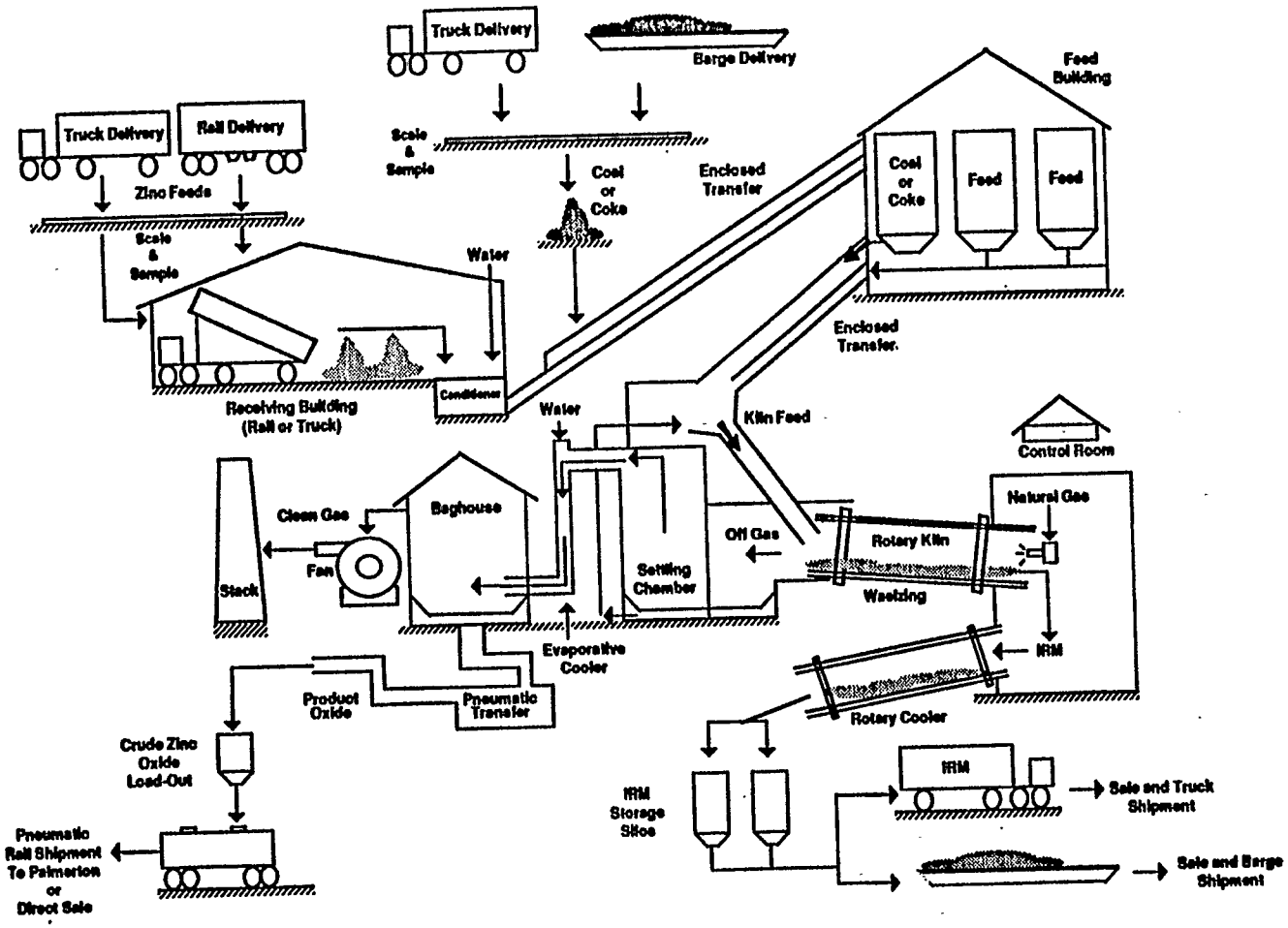

Source: Horsehead Development Company, Inc.

At the ZCA-HRD joint venture operation in Bartlesville, Oklahoma the lead concentrate is processed through a largely hydrometallurgical recovery circuit. Outputs from this operation include more concentrated lead concentrate, copper sponge, cadmium sponge, and zinc oxide. Generally, these materials are sent to primary smelters. It should be noted that the continued viability of cadmium recycling is dependent on the price of cadmium, which is currently very low.

As mentioned previously, HRD has been developing a technology at its Monaca, Pennsylvania research and development facility that can be used to recover various metals from wastes and that can be used to replace the Waelz kiln step in the EAF dust recovery sequence. HRD completed construction of its first full-scale flame reactor at a North Star Steel EAF mill in Beaumont, Texas in early 1993. The facility began reclaiming EAF dust from the North Star Steel mill and other local mills in June of 1993.

Figure 6.7 illustrates the flame reactor process. The flame reactor itself is a water-cooled vertical reactor approximately 15 feet in height with an internal diameter of 22 inches. The reactor consists of a burner section at the top and a reactor section at the bottom. Fuels, which may consist of natural gas or dry, pulverized coke or coal are injected into the burner section with oxygen-rich air. This mixture is ignited, and burns at approximately 2,000 °C, producing a gas rich in carbon monoxide. This reducing gas is fed down into the reactor section, where EAF dusts (or other wastes) are injected from storage bins. Certain metals in the waste feed are selectively reduced and volatilized, and exit the reactor in the offgas. The metals are subsequently oxidized and collected as a particulate material that is similar to the crude zinc oxide (CZO) produced in Waelz kilns.

This material is shipped from the Beaumont facility to Palmerton for calcining with the CZO from the other HRD facilities. A slag is produced in the flame reactor, which after cooling, is similar in chemical make up to the iron rich material (IRM) produced in a Waelz kiln. Flame reactor IRM is more vitrified, less porous, and has less compressive strength than Waelz kiln IRM. HRD plans to market the flame reactor IRM for the same uses as Waelz kiln IRM.

Regulatory Issues and Analysis

In discussions with the Agency and, as a member of the Metals Recovery Coalition providing information on metal recovery to the Agency,[134] HRD has described the RCRA hazardous waste regulations as having a mixed effect on HRD's metal recovery operations. In some ways, RCRA regulations have greatly increased the amount of EAF dust that HRD recycles. Notably, the listing of EAF dust as a hazardous waste, which requires treatment or disposal at a hazardous waste facility, and the identification of high-temperature metal recovery as the required treatment technology for high-zinc EAF dust have driven recycling.

Figure 6.7 - Process Flow Diagram, Flame Reactor

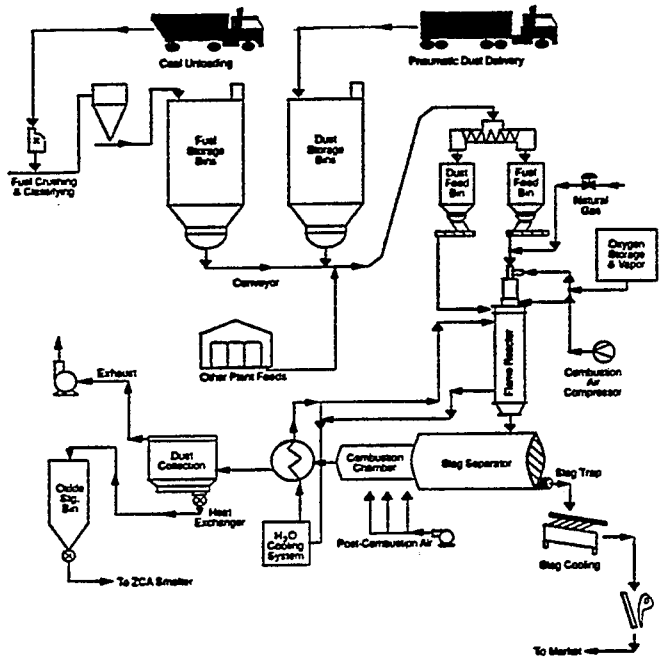

Source: <u>Horsehead Resources Development, EAF Recycling Stalwart Expands Within and Beyond its Core Business</u>, EI Digest, Environmental Information Ltd., May 1991.

However, HRD believes that many of the substantive requirements of RCRA applicable to recovery operations pose great disincentives to recovering metals. HRD identified the following five regulatory disincentives to metal recovery as the most detrimental to their business:

- Derived-from rule;
- Uncertain regulatory status of partially-reclaimed products;
- Part B storage permit;
- Lack of consistency in state implementation of RCRA regulations; and
- Potential inclusion of metal recovery process conditions in permit.

Each of these disincentives is discussed below. In addition, HRD identified as a another disincentive the inconsistent (less restrictive) application of RCRA regulations to other uses of EAF dust such as use in fertilizer[135] or use in a glassified material that is used to make roofing shingles, abrasive blast, glass ceramic, or ceramic glazes.[136]

Derived-From Rule

Under the RCRA regulations the derived-from rule stipulates that any solid waste generated from the treatment, storage, or disposal of a listed hazardous waste continues to be identified as that listed hazardous waste, unless the material is delisted (a case-by-case determination made by the Agency in response to a petition submitted by the facility to exclude the material from being a hazardous waste[137]). Wastes that are identified as hazardous under the derived-from rule may or may not exhibit any characteristics of hazardous waste, and may contain hazardous constituents at any levels ranging from 0 to 100 percent. It should be noted, however, that even without the derived-from rule, solid wastes generated in the treatment of other wastes would be regulated as hazardous if they exhibit hazardous waste characteristics.

The derived-from rule applies to any such solid wastes that are to be disposed of, burned for energy recovery (or used to make a fuel), or used in such a way that they are placed on the land (i.e., used in a manner constituting disposal, e.g., used as construction aggregate placed on the land, as anti-skid material placed on roadways, or used to make fertilizer). Generally derived-from hazardous wastes may not be used on the land without a RCRA permit. However, there is an exemption that allows the use of EAF dust-derived fertilizers, and of other waste-derived products if the hazardous constituents have been treated so as to be inseparable by physical means (e.g., in cement or asphalt) and can meet land disposal restrictions levels. However, this exemption, which allows the use of such waste-derived products on the land but does not change their status as hazardous wastes, has been criticized as not practical in that such products that are considered hazardous waste have a "stigma" and thus are difficult to market.

Since the main input to HRD's recovery processes is listed hazardous waste K061, the derived-from rule could be interpreted to be applicable to any materials generated in the recovery process that are disposed of, burned for energy recovery, or used in a manner constituting disposal. Since the iron rich material (IRM) generated in the Waelz kilns (and now also in the flame reactor) is sometimes used in applications involving placement on the land, this issue has been a barrier to metal recovery for HRD in two ways.

First, HRD indicates that lack of certainty and consistency in implementing this rule has caused confusion, unnecessary litigation, and increased management costs. For example, the status of IRM in Pennsylvania was only eventually decided through a state administrative decision (that IRM was a product and not a derived-from waste), but this decision has not been widely agreed upon or accepted by some parties, making the marketing of IRM a very contentious issue. Subsequently, Pennsylvania has modified its hazardous waste regulations and has added new residual waste (non-hazardous waste) regulations. These new Pennsylvania regulations now define IRM as a waste and will subject its management to some controls.

Second, HRD indicates that the derived-from rule, in concert with the legitimacy issue discussed below, creates an "unlevel playing field" for metal recovery companies competing in the marketplace against primary metals producers and other competing product manufacturers. For example, HRD explains that because a primary metal producer has not introduced a listed hazardous waste into the metal production process (they use ores instead), slags from the process that may have the same composition and physical characteristics as metal recovery slags are not derived-from hazardous wastes, and thus would be hazardous waste only if they exhibited hazardous waste characteristics.[138] Thus, primary metal producers may be able to sell slags as unrestricted products to be used on the land while equivalent metal recovery slags would have to be managed as hazardous waste. In addition, primary producers of products placed on the land that metal recovery slags may replace (e.g., aggregate quarries), may be able to market products with higher levels of hazardous constituents than metal recovery slags, while the slags must be managed as hazardous waste.

Partially-Reclaimed Materials

The second disincentive to metal recovery identified by HRD is the uncertain regulatory status of partially-reclaimed materials. Under the RCRA regulations, hazardous wastes that have been partially reclaimed but must be reclaimed further before distinct components are completely recovered continue to be classified as hazardous wastes. In other words, until the reclamation process results in a final product, a hazardous waste being reclaimed remains a waste.[139] HRD indicates that this provision has been a major disincentive to metal recovery in two ways.

First, HRD points out that, starting with ores, materials in primary metal manufacturing are continually purified and refined in numerous operations before the final metal commodity is produced. HRD indicates that as materials become more concentrated in the intermediate manufacturing steps, they become more economically valuable, and are saleable to other primary metals manufacturers. HRD compares their metal recovery operation to a primary manufacturing operation and argues that the materials produced in their various processing steps (e.g., crude zinc oxide, zinc calcine, lead concentrate) are analogous to these economically valuable materials in primary metal manufacturing and thus should be seen as recovered products rather than wastes.

Again, HRD indicates that potential classification of these materials as hazardous wastes favors the primary industry because recovery facilities must handle as hazardous waste (permits, recordkeeping, etc.) materials that are similar, if not more valuable than, those handled as unrestricted products by the primary industry.

HRD is also concerned that in addition to the substantive disincentives this provision causes, in their case uncertainty and disagreement about implementation of this provision has caused conflicts over the scope of regulated activities, unnecessary litigation, long delays in permitting, and conflicting interpretations by different states concerning the same materials.

Part B Storage Permit

The third regulatory disincentive to metal recovery identified by HRD is the RCRA Part B storage permit. Currently under RCRA, except for boilers and industrial furnaces, recycling processes are generally exempt from permitting (i.e., the unit in which recycling occurs is exempt, but units in which materials are stored prior to recycling are regulated). In addition, industrial furnaces in which only material recovery (i.e., not energy recovery) occurs are exempt from the boiler and industrial furnace (BIF) permitting requirements. As such, HRD's metal recovery units are exempt from permitting. However, in Pennsylvania (Palmerton facility) the receiving building in which EAF dust is first received is considered a storage unit, and storage prior to recycling does require a permit. Thus, the Palmerton facility has operated under interim status for storage and is now moving toward a final permit.

HRD identifies the storage permit as a disincentive to recovery for several reasons. First, HRD argues that the cost of permitting is prohibitive, estimating that they have spent $890,000 for the permit application, related legal expenses, and other related engineering and studies at Palmerton. Second, HRD claims that the time delays in obtaining a permit and then modifying it each time a change is made to facility operations restricts the company's ability to make technological advances for increased quality and decreased costs. For example, HRD claims that because design details for the receiving building are included in the permit application (and will be in the permit), they can not make improvements to the building that would be beneficial to the environment without adding to the permit delay by making changes to the application.

Inconsistent State Implementation

The fourth disincentive to metal recovery identified by HRD is lack of consistency in state implementation of RCRA regulations. HRD explains that in their experience, similar operations located in different states have had widely varying requirements imposed by the different state agencies under the states' RCRA hazardous waste program. HRD indicates that this kind of inconsistency makes regulatory costs unpredictable, which inhibits investment and thus metal recovery.

In addition, a great deal of time and money is spent identifying the regulatory requirements applicable from one location to another. HRD believes that this issue is of particular concern for metal recovery because operations are likely to be located in various parts of the country due to the widespread nature of the generation of input materials and the multi-step nature of the recovery process. HRD would prefer clear and unambiguous federal standards which are preemptive of the states on the basis that commerce must be regulated consistently across the United States.

Permit/Regulatory Control of Recovery Process

The fifth regulatory disincentive to metal recovery identified by HRD is partially a prospective concern caused by promulgation of new regulations governing waste management in Pennsylvania, and partially a concern that similar changes may be made in the future to the federal hazardous waste regulations. Although it is not possible at this time to ascertain specifically how the new regulations will affect HRD's Pennsylvania facilities, HRD is concerned that the new rules will result in permits for and regulatory control over the recovery process itself (e.g., the operating conditions of the Waelz and calcining kilns).

HRD indicates that changes in operating practices and technology are constantly made in any manufacturing operation to improve product quality, productivity, environmental quality, and competitiveness and that these changes must similarly be made in recovery processes. HRD argues that any regulatory control imposed on the recovery process itself will slow or halt routine changes necessary for proper operation and maintenance of the process, in addition to stifling innovative changes that could improve the process over time.

HRD cites the example of the Palmerton receiving building permit application that includes detailed engineering specifications for the existing structure (to be included in the permit). In order to make any improvements to the building, HRD would have to go through a permit modification, which HRD believes is a burdensome and time consuming process.

As an alternative approach, HRD points to its experience at the Chicago facility in Illinois and the Rockwood facility in Tennessee, where HRD believes the regulatory agencies have imposed very strict limits on emissions from the plants through air permits, but have not imposed RCRA permits specifying how any of the facilities' operations are to be conducted. HRD believes that not having to go through permit modifications has allowed them to rapidly apply new and improved containment technology which has benefited both HRD and the state through improved competitiveness and reduced emissions.

It should be noted that while these regulatory disincentives may discourage recovery of metals, the purpose of the RCRA hazardous waste controls is to protect against the risks posed to human health and the environment from management of materials that may leach toxic constituents or pose other hazards. Wastes, from which metals that are also hazardous constituents are recovered (e.g., lead), by necessity have relatively high concentrations of these hazardous-constituent metals (and may pose other hazards). Through the numerous steps of a recovery process intermediate materials tend to be more and more concentrated in these metals, while at the same time becoming more and more valuable as commodities. Thus, balancing the need for regulatory control against regulatory disincentives for recovery is not an easy task.

RCRA Regulatory Incentives to Metal Recovery

As a counterpoint to these regulatory disincentives, HRD also points out that a great deal of their business has been created by RCRA regulations. Although HRD began recycling EAF dust before it was listed as a hazardous waste, HRD acknowledges that even though the price of zinc was relatively high at the time, before EAF dust was listed as hazardous waste HRD's market was limited to local steel mills from which transportation costs were low. After the listing, EAF dust generators had only the options of hazardous waste landfill or hazardous waste recycling. HRD indicates that landfilling was in some cases less expensive, and thus that its customers were generally those companies that felt that recycling was environmentally a better alternative.

In addition, in August of 1991, an Environmental Protection Agency RCRA regulation went into effect tightening the 1988 treatment standard for EAF dust, or hazardous waste K061, containing greater than 15 percent zinc. Specifically, this regulation required that high-zinc EAF dust be treated to levels based on High Temperature Metal Recovery (HTMR). HRD's Waelzing and calcining process was identified as an HTMR technology, as was HRD's flame reactor technology. HRD was one of only a few companies in the U.S. offering HTMR at the time, and was the only company in the U.S. with significant existing treatment capacity. This was primarily due to the concurrent depletion of a mine which had been the primary source of material for HRD's Waelz kiln refining process. Since it became known that this requirement would go into effect, HRD greatly increased its capacity to reclaim EAF dust by adding new kilns in Chicago, Rockwood, and Palmerton, and by commercializing the flame reactor and opening the first plant in Beaumont. Once HTMR was required for high zinc EAF dust in 1988, HRD's existing business almost doubled.

Conclusion

Like other case studies, RCRA Subtitle C regulation has had a mixed impact on HRD to recover metals from hazardous wastes. While EAF dust recovery rates in the United States remain relatively high, evaluating RCRA Subtitle C regulation to encourage environmentally protective metal recovery remains an Agency priority.

6.5 East Penn Manufacturing Company, Inc.[140]

East Penn Manufacturing Company, Inc. (EPMC) in Lyon Station, Pennsylvania, manufactures over 200 types of automotive and industrial lead-acid batteries under the Deka label. EPMC also produces a number of battery accessories such as battery cables, booster cables, spark plug wires, and battery trays. EPMC receives spent lead-acid batteries back from customers and recovers the lead, acid, and plastic battery casings for use in their manufacturing process.

EPMC was selected for a case study for several reasons. First, EPMC is primarily a manufacturing company; their main focus is on producing quality products for their customers. Recycling is an important part of EPMC's business, but they recover only materials that are produced in and/or utilized in their core manufacturing operations. Second, EPMC provides an example of the role that recycling can play in product stewardship. Besides materials produced in EPMC's own manufacturing processes, all of the materials that EPMC recycles are spent products returned from their customers after use. Third, EPMC recycles spent lead acid batteries, a hazardous waste that is exempt from RCRA hazardous waste regulations throughout the waste management cycle until the batteries reach the recycling facility. In addition, EPMC's recycling activities illustrate in part how the market value of a recycled material may influence the recycling rate. Specifically, the national recycling rate for lead acid batteries in 1990 was approximately 98 percent.[141]

History

EPMC began as a small family owned company in rural Pennsylvania in 1946. The company began manufacturing lead-acid batteries to meet a shortage of batteries that occurred after the end of World War II as part of a large increase in automobile manufacturing and use. EPMC, which has grown steadily since 1946, is owned and directed by one of the original founders. The company's operations now consist of one industrial and three automotive battery manufacturing plants, cable and wire manufacturing plants, and numerous support services including research and development, storage and distribution, a large self-maintained truck fleet, and maintenance and machine shops. The company's manufacturing and support operations have been at the same location in eastern Pennsylvania since 1946. The site was originally a Civil War era iron oxide mine. EPMC also has 26 storage and distribution centers located throughout the eastern United States.

In 1992 EPMC's sales were 250 million dollars. EPMC is now one of the six largest U.S. manufacturers of lead-acid batteries in the country,[142] producing five and a half million automotive and custom industrial batteries in 1992. The U.S. lead-acid battery market is predominantly supplied by domestic manufacturers.[143]

EPMC first began smelting spent (used) lead-acid batteries, off-specification batteries, and manufacturing scrap to recover the lead for use in their manufacturing process several years after the founding of the company. The first smelter was a very small furnace, which has been replaced several times by larger and more modern equipment. In the late 1970s a cupula blast furnace was installed, and in the late 1980s a reverberatory furnace was added to increase capacity and treat materials prior to the blast furnace. To illustrate how EPMC's lead recovery activities have grown, while approximately 24,000 tons of lead were recovered in 1980, EPMC estimates it will recover approximately 60,000 tons of lead in 1993.

Process Description

EPMC annually receives approximately four and a half million spent lead-acid batteries back from customers and processes them to recover lead, sulfuric acid, and polypropylene chips. The lead and sulfuric acid are used at EPMC to produce new batteries. The polypropylene chips are sent off-site to one of EPMC's battery casing suppliers who uses the chips to make feedstock for the manufacture of polypropylene products, including battery casings. Figure 6.8 presents a simplified flow diagram of EPMC's recovery processes.

Spent lead-acid batteries are returned to EPMC in a reverse distribution system -- spent batteries are returned after they are replaced through the same distribution chain new batteries are delivered. The majority of spent batteries are brought to EPMC on company trucks from the distribution centers, distributors, and battery users to which the trucks deliver new batteries. The returned batteries may be of any brand, since customers may be replacing and returning any brand of battery.

Spent batteries, which generally do contain the acid electrolyte, are stored outside on pallets near the smelter prior to being fed into the recovery process. Under an agreement with the Pennsylvania Department of Environmental Resources, no broken or damaged batteries may be stored in this outdoor area. Automotive batteries are loaded onto a conveyor that feeds them to a slow-speed saw. The tops of the batteries are sawed off, and the acid is drained and piped to EPMC's patented acid refining process. Impurities such as iron are removed from the acid, which can then be used to replace sulfuric acid that EPMC would otherwise have to purchase. By reusing the acid, EPMC also avoids the cost of acid neutralization and treatment. The plastic tops and casings are sent to EPMC's plastic recovery plant, where the plastic is crushed and washed to remove any entrained lead oxide and metallic lead pieces.

The remaining portions of the batteries, which consist of lead oxide paste and metallic lead grids and posts, are known as lead groups. The groups are fed into a material storage building where they are stored in a pile and moved around with a front end loader. Lead cleaned from the casings at the plastic recovery plant, off-specification batteries from EPMC's quality control checks, and lead plant scrap from EPMC's manufacturing operations are also fed into the material storage building.

The building is approximately 100 feet long and 80 feet wide, and is completely enclosed. Constructed in 1983, the floor consists of ten-inch thick concrete covered with a poured, acid-resistant asphaltic membrane, and a layer of acid resistant brick. A supply of approximately 700 tons of lead groups is maintained in the building, which is enough to feed the smelter for five days.

In the storage building the lead groups are loaded into a hopper that feeds a reverberatory furnace. This oxidizing furnace is fueled with propane and operates at temperatures exceeding 2,000 °F. A relatively pure lead bullion is tapped from the reverberatory furnace and sent to large wet-chemistry refining kettles where additional copper, nickel, and tellurium are removed from the lead as a dross. The remaining lead, known as soft lead, is molded and cooled, and sent to EPMC's lead-oxide department. There the soft lead is used to produce a fine lead-oxide, which is then made into paste that is used to coat metallic lead grids to make battery plates.

Slag produced in the reverberatory furnace is fed with coke and fluxes into the reducing blast furnace which operates at temperatures exceeding 2,000 °F. A hard lead alloy containing antimony, arsenic, and tin is tapped from the blast furnace and sent to large kettles where the balance of the lead alloy is adjusted to produce hard lead, or antimonial lead, in varying specifications. A dross generated in this process consists largely of metallic oxides and sulfides and is high enough in lead content to be returned to one of the furnaces, depending on the composition. The antimonial lead is molded, cooled, and then sent to EPMC's casting department where the lead grids used to make battery plates and other battery parts are cast.

Slag and matte (a sulfide mixture) generated in the blast furnace are recharged to the blast furnace in a batch operation run under different conditions in which additional hard lead and a vitrified slag is produced. The slag generally does not exhibit characteristics of hazardous waste and is disposed of in a non-hazardous industrial landfill. Any slag generated that does exhibit the toxicity characteristic for lead can be disposed of in a Subtitle C landfill (until May of 1994 when the land disposal restrictions will require treatment prior to land disposal).

Figure 6.8 **Process Flow Diagram for East Penn Manufacturing Company, Inc.'s Recycling Operations**

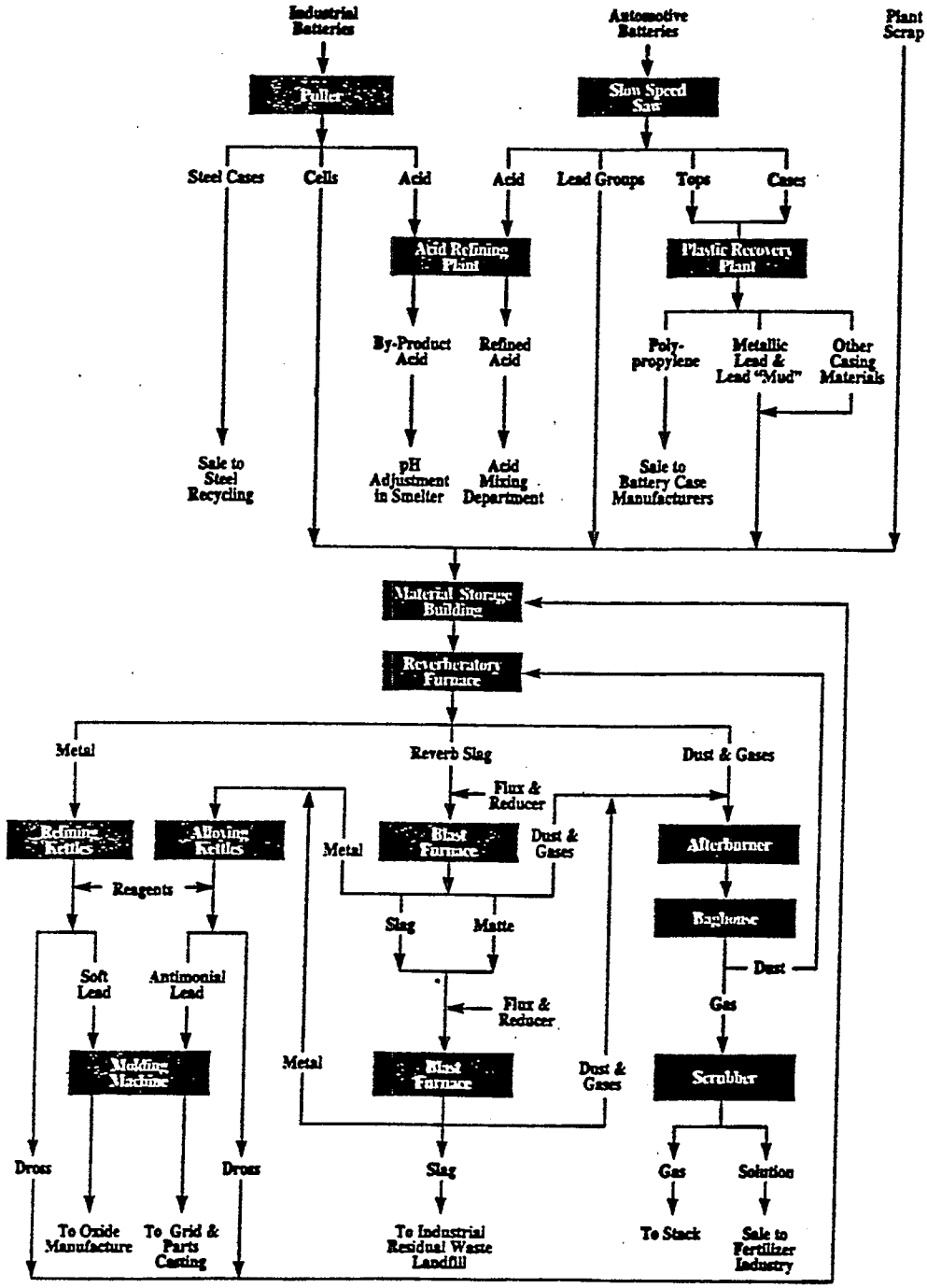

Source: "Secondary Lead Smelting at East Penn Manufacturing Co., Inc.," in Proceedings from the AIME Extraction Processing Division Congress, 1993, ed. John P. Hager, p. 945.

Note to Figure 6.8: There is only one blast furnace at the facility. The furnace is shown twice in the flow diagram to illustrate that slag from the furnace is reintroduced a second time with fluxes and reducers to recover additional metal.

Off-gasses from both of the furnaces are cleaned using an afterburner, a baghouse, and finally a wet scrubber. The dust collected in the baghouse is fed directly back into the reverberatory furnace to recover additional lead. The wet scrubber solution, which is rich in nitrogen, is sold as an ingredient for fertilizers. The concentrations of heavy metals in this solution are significantly below the hazardous waste characteristic levels.

EPMC expects to recover approximately 60,000 tons of lead from lead-acid batteries in 1993. At the current record low price of 18 to 22 cents per pound, EPMC will avoid having to purchase approximately 21.6 million dollars worth of lead from other sources (plus transportation costs). Additional savings are made from the acid and plastic recovery. EPMC also believes that the service they offer their customers, quick and easy removal and proper handling of one battery for each battery sold, increases their share of the battery market. Within some geographic radius, EPMC should be able to recycle batteries at lower cost than other secondary lead smelters due to their use of the reverse distribution system for transportation. In other words, EPMC's trucks would be returning to the plant after deliveries in any case, it costs little more to bring the truck back full of batteries. As there is only one other battery smelter located at a manufacturing site in the country, this would not be true for most other smelters.

Regulatory Issues and Analysis

Partial Exemption for Lead-Acid Batteries That Are to Be Recycled

Lead-acid batteries, which are hazardous under the toxicity characteristic due to the lead content (approximately 52 percent lead by weight), are regulated differently than any other hazardous waste under RCRA Subtitle C. If lead-acid batteries are recycled, only facilities recycling the batteries (e.g., battery crackers and secondary lead smelters) are subject to regulation. A permit is required only for storage of the batteries prior to recycling. Thus, batteries that are to be recycled are not subject to any hazardous waste regulations when they are in the hands of generators, transporters, or intermediate storage facilities.

In the past, if lead-acid batteries were to be disposed of, they were subject to the full panoply of Subtitle C regulations including those for generators, transporters, and treatment, storage and disposal facilities. Since May of 1990, however, under the land disposal restrictions program, thermal recovery of lead in secondary smelters has been specifically required for lead-acid batteries, essentially removing the disposal option for these batteries.

Batteries that are to be recycled were exempted from generator, transporter, and intermediate storage requirements in 1985 for several reasons. First, the recycling rate was already quite high, thus there was already a recycling system in place demonstrating that the batteries were generally not disposed of in the municipal waste stream or abandoned such that they could pose a risk to human health or the environment.

Second, Department of Transportation regulations already covered battery transport. Third, it was believed that batteries were not generally stored for long periods of time, minimizing the risk of the casings cracking and causing a release to the environment. Permitting requirements for recycling facilities were retained because there had been a history of environmental damage from recycling operations at battery crackers and smelters. A number of these older operations were known to have become Superfund sites.[144]

With this background, it should be clear that the batteries EPMC receives back up the product distribution chain are not subject to regulation until they reach EPMC's facility. Thus, customers returning batteries are not subject to hazardous waste generator requirements, interim storage facilities (e.g., retailers, distributors) do not need permits for their battery storage, EPMC's trucks do not have to be hazardous waste transporters, and no manifests are required for battery shipments. EPMC, however, requires a permit for storage of the batteries prior to cracking and resmelting. (It should be noted that under recent changes to the Pennsylvania state regulations, secondary lead smelters handling only lead-acid batteries will in the future not require site-specific permits but will be granted permits-by-rule as long as they comply with specified requirements.)

Lead-acid batteries are somewhat different than many other hazardous wastes because, at least in the past, the economics of recycling have been such that spent batteries have had net economic value. In other words, even including payments to generators to purchase spent batteries, it has been possible to resmelt batteries and both cover the costs of transportation, storage, and smelting and to make some profit on the sale of the recovered lead. This contrasts with the majority of hazardous waste recycling, for which the recycler generally charges the generator a fee for the recycling service (although the fee may be less than the cost of operating the recycling operation due to profits made in the sale of the recovered product). One reason the economics of lead-acid battery recycling work out this way is that batteries are a very concentrated source of the recovered commodity, lead. A typical automotive battery weighs 32 pounds, of which approximately 17 pounds is lead. Thus, much less concentrating is necessary to recover salable product than is generally the case for less concentrated hazardous wastes such as sludges or air pollution control dusts.

As a result of the economics of lead-acid battery recycling, secondary smelters (or collectors further down the distribution chain such as service centers and distributors) have generally paid generators for their spent batteries. For example, EPMC offers customers a discount on a new battery for every spent battery they buy. EPMC believes that the fact that batteries can be returned for a fee ensures, without regulatory controls, that batteries will not be managed improperly (e.g., left by the side of the road or dumped in municipal landfills). The fee provides an incentive for return. The consistently high rate of lead-acid battery recycling over time provides support for this argument (see discussion in Section 5.3.1.1 of this report).

For example, although wastes, including batteries, generated by households (do-it-yourself battery changers) and conditionally exempt small quantity generators are not subject to hazardous waste regulations, for the recycling rate to be as high as 98 percent most of these batteries must be returned for recycling. Thus, even unregulated batteries are generally returned for recycling.[145]

It should be noted that the continuing drop in the price of lead (now around 18 - 22 cents per pound), is threatening to change the economics of lead-acid battery recycling. If the price were to continue to drop, at some point it would become more expensive to transport, store, and smelt spent batteries than to buy virgin lead on the market. EPMC points out that complying with the hazardous waste regulations (e.g., permit applications and modifications, construction of indoor storage, reconstructing the materials storage building to meet containment building requirements) is, along with the price of lead, one of the major variables in the cost of recovering lead from spent batteries and thus has a direct effect on whether batteries are purchased, or generators must pay for recycling. EPMC also notes that due to the current exemption for lead-acid batteries, hazardous waste transporter fees, manifest costs, and costs for permits for interim storage locations are not incurred, and that these costs would have a large effect on the costs of recycling if these things were required. EPMC believes that if the costs of recycling were to increase to the point that recyclers had to charge generators to take their batteries illegal disposal would increase and recycling would decrease.

Battery Storage

Battery storage is an important issue for EPMC. First, batteries (the majority of which are automotive) tend to fail and require replacement when it is either cold or hot. The beginning of winter is the high point in battery replacement; spring is the low point. For East Penn to utilize the full capacity of its smelting operations it must have a constant supply of approximately 20,000 batteries a day. Thus, batteries must stored during times of high generation, to be used in times of low generation. To ensure supply for the smelter, EPMC may store on-site up to 100,000 batteries at one time. EPMC estimates that approximately 4,000 square feet of storage space is necessary to store this quantity of batteries.

For several reasons, EPMC believes that storage at their facility is preferable to the alternative; storage at the numerous locations where batteries are generated (automotive service centers, dismantling centers, etc.). First, storage at the facility assures EPMC that they will have the stocks necessary for a constant feed to the smelter. Second, EPMC's customers do not want batteries stored at their locations due to environmental and safety concerns, as well as the space that would be required. Prompt removal of spent batteries is part of the service that EPMC offers with purchase of its new batteries. Finally, it is environmentally preferable to have the batteries stored at one controlled location rather than at numerous unidentified, uncontrolled locations.

Battery storage is an issue of environmental concern because the electrolyte contained in batteries is not only an acid, but contains lead and other contaminants. In addition, the plastic battery casing is vulnerable to drying and cracking if left in the sun for long periods of time.

EPMC first operated under interim status, and then obtained a final Part B permit for storage from the Pennsylvania Department of Environmental Resources (PADER) in 1988. The permit covers storage of the lead groups in the material storage building after the batteries have been cracked (cut open and dismantled), but does not cover storage of the batteries prior to the cracking operation. Under the RCRA permitting standards, secondary containment would be required for the battery storage area. As part of a consent agreement concerning storm- and waste-water management issues, EPMC has agreed to construct indoor storage for these batteries by the end of 1993. EPMC estimates the cost of constructing the indoor storage to be in excess of one million dollars.

Containment Building Requirements

Under the land disposal restrictions program, which was created by 1984 amendments to the Resource Conservation and Recovery Act, storage of hazardous wastes on the land is prohibited unless the waste has been treated to meet specified treatment standards. Under this program, lead groups (cracked batteries) may not be stored on the land. EPMC's materials storage building has been in the past considered (and permitted as) a waste pile. This is based on the RCRA definition of waste pile, which includes piles of waste whether they are indoors or out. In the 1984 amendments to RCRA, Congress defined land disposal to include waste piles, thus in effect banning the storage of plates and groups in indoor or outdoor piles.

In order to allow the continued storage of lead groups (and other wastes), which due to their weight, volume, and physical form can practically only be stored in piles and moved around by front end loader, EPA created a new regulated unit known as a containment building. To meet the intent of Congress in prohibiting land storage, the regulations governing containment buildings include, in addition to fugitive air emissions controls, secondary containment and leak detection requirements.

As described in the process section above, EPMC's materials management building (i.e., waste pile) has extensive fugitive air emissions controls. The building also includes a foundation and flooring designed to meet stringent performance standards for acid resistance and structural integrity. The air emissions controls are adequate to meet the containment building requirements, but the building does not have secondary containment and leak detection.

In essence, to meet the secondary containment and leak detection requirements for a storage building like EPMC's, there must be a double floor under the building. The bottom floor and space above it would provide containment for and allow detection of any leaks from the top floor. To meet this requirement, EPMC will have to again reconstruct its materials containment building to install a double floor. EPMC estimates that the cost for this reconstruction will be at least $500,000. In addition, EPMC estimates that the permit modification necessary to change its permit to include containment building standards in place of waste pile standards will cost approximately $100,000.

The land disposal requirements are being phased in over time, and the prohibition on storing plates and groups goes into effect on May 8, 1994. Thus, EPMC must have completed the reconstruction by this date. EPMC was granted a two-year variance to continue storing lead groups in the material storage building (a waste pile) to allow it time to complete the reconstruction, however, the variance runs out at the end of 1994, eight months after the effective date for the ban. Thus, EPMC actually has just over a year to complete the construction (including design approvals from the federal EPA, which is implementing this part of the program in Pennsylvania). The permit modification will have to be made with the PADER, prior to construction.

Timing of Requirements Imposed by Different Regulatory Agencies

EPMC's agreement with PADER requires that EPMC construct indoor space for its battery storage by the end of 1993. Under the federal land disposal restrictions program, EPMC is required to reconstruct its materials storage building to meet containment building storage standards by May 8, 1994. EPMC explains that these two activities together represent a huge capital outlay for a company of EPMC's size, and that such situations present large disincentives to recycling, or continuing to recycle. Covering the costs of these two activities within one year will greatly strain EPMC's financial resources, not only in terms of the cost to borrow the money if necessary, but also in displaced improvements to its manufacturing operations which could, eventually, affect its competitiveness in the battery market.

In cases where various regulatory agencies govern different aspects of a recycling operation's activities, EPMC would recommend that the regulatory agencies be sensitive to this concern. If appropriate, the various regulatory agencies could coordinate and institute a planning process to avoid the company being forced to incur a disproportionate amount of regulatory costs during any one year.

Financial Assurance for Closure of Facility

Under the RCRA permit requirements EPMC must provide financial assurance (e.g., insurance, trust fund, bond, letter of credit) sufficient to completely close the facility if, for example, the company were to go out of business. EPMC must include coverage for the cost of sending its maximum storage of batteries off-site for disposal. EPMC believes that coverage for this cost is unnecessary in that lead-acid batteries can generally be sold for recovery and would not be disposed of. EPMC is not allowed to deduct the fees that would be generated from sale of the battery inventory from the closure costs it must provide coverage for.

New State Regulations

PADER has recently promulgated new regulations in Pennsylvania that include regulatory controls for recycling processes (which are currently exempt under federal RCRA regulations and have, in the past, been exempt in Pennsylvania (other than boilers and non-metal recovery industrial furnaces)). However, secondary lead smelters were exempted from these new requirements if they only treat lead-acid batteries. EPMC suggests that without this exemption they might not be able to continue their smelting operations in that the increased costs might make it uneconomical.

EPMC notes that in order to retain this exemption they will not accept any wastes other than lead-acid batteries. EPMC had been considering the possibility of accepting other lead-bearing waste generated nearby, such as lead-containing process residues from the manufacture of lead shielding for picture tubes. (This waste would not be regulated as hazardous waste under the federal regulations in that it would be a characteristic by-product being reclaimed.) EPMC believes that limitations such as this one on the wastes that a facility can accept (regardless of whether the waste is amenable to the facility's recovery process) will increase the cost of recycling, decrease the rate of recycling, and force additional wastes to disposal.

Potential Federal Taxes

Finally, EPMC notes that a 45 cents per pound federal tax on lead produced has been proposed in the U.S. Congress. Given that the price of lead is currently 18 - 22 cents per pound, this would represent a tax of approximately 250 percent. For the 60,000 tons of lead that EPMC expect to produce in 1993, this could amount to $27 million in additional taxes.

EPMC is particularly concerned that if imposed, primary lead producers or importers may be exempted from this tax. This type of tax structure would greatly increase the costs to secondary producers relative to primary producers, and would be a major economic disincentive to lead-acid battery recycling.

Conclusion

This case study demonstrates a number of points. First, as mentioned in Chapter 5, each metal-bearing hazardous waste stream is unique and includes aspects that need to be considered in applying regulations to these wastes. Spent lead-acid batteries are much more closely tied to the price metal commodities (i.e., lead) than other hazardous wastes. Both spent lead-acid batteries and many operations that reclaim them may be more similar to commodities and manufacturing processes than other metal-bearing hazardous wastes. This can change the economics of metal recovery (recall Chapter 5). When metal prices decline, spent lead-acid battery recovery may be much more vulnerable than other types of metal recovery of hazardous waste.

Second, RCRA Subtitle C regulation affects spent lead-acid battery recovery differently than other metal-bearing hazardous wastes. Although similar in that RCRA contains both incentives and disincentives for metal recovery of spent lead-acid batteries, different RCRA Subtitle C regulatory provisions appear to be of greater concern to EPMC. The RCRA Subtitle C regulatory provision of greatest concern to EPMC appear to be containment building standards compared with the derived-from rule which has been a greater concern in other case studies. RCRA Subtitle C regulatory incentives also differ in that the partial exemption for spent lead-acid batteries prior to recovery may be the greatest regulatory incentive for these wastes compared with the Land Disposal Restriction program in other case studies. Finally, the net effect of RCRA Subtitle C regulation on EPMC may be more difficult to assess given that many regulatory costs are prospective. However, if company estimates of capital outlays for retrofitting its containment building are accurate, RCRA Subtitle C regulatory impacts could be substantial.