United States
Environmental Protection
Agency

Solid Waste and
Emergency Response
(5101)

EPA530-R-93-018
NTIS: PB94-184850
February 1994

EPA

Report to Congress on Metal Recovery, Environmental Regulation & Hazardous Waste

Recycled/Recyclable
Printed with Soy/Canola Ink on paper that contains at least 50% recycled fiber

Disclaimer

The mention of specific metal recovery operations or other firms, commercial products, or other specific reference to a particular business, or article of commerce does not constitute an endorsement by EPA. EPA does not endorse either commercial operations or products. Regulatory theories by waste generators. metal reclaimers or trade associations about how Subtitle C regulation may apply to their particular operation or member operations are presented to show how the particular waste generator, metal reclaimer or trade association perceives RCRA Subtitle C regulation. No statement or reference to a statement made by a non-EPA entity (i.e., person, firm or organization) in this document should be construed to constitute EPA agreement with the accuracy of the matter asserted. No statement in this document constitutes a statement of EPA regulatory interpretation regarding the current or prospective applicability of any RCRA Subtitle C regulation to a particular person, firm or organization.

TABLE OF CONTENTS

Abstract v

Executive Summary ES-1

1. Introduction and Overview to Metal Recovery of Hazardous Waste and Resource Conservation And Recovery Act Hazardous Waste Regulation 1

1.1 Description of Hazardous Waste/Terminology 2
1.2 Overview of Metal-Bearing Hazardous Waste 3
1.3 Definition of Metal Recovery 4
1.4 Relationship Between Metal Recovery and Pollution Prevention 5
1.4.1 RCRA Philosophy on Resource Conservation 5
1.4.2 Pollution Prevention Act Policy, Source Reduction And Its Relationship To Metal Recovery of Hazardous Waste 6
1.5 Overview of Metal Recovery Technologies 8
1.5.1 Pyrometallurgy 8
1.5.2 Hydrometallurgy 9
1.6 Overview of RCRA Subtitle C Provisions Affecting Metal Recovery From Hazardous Waste 10

2. Report Methodology & Limitations 14

2.1 Data Sources and Limitations 14
2.2 Other Factors Affecting Metal Recovery 16
2.3 Summary of Impact of Data Limitations 17

3. Characterization of RCRA Subtitle C Metal-Bearing Hazardous Wastes 18

3.1 Metal-Bearing Hazardous Wastes: Generation and Recovery 18
3.1.1 Quantities of Metal-Bearing Hazardous Waste Generated 18
3.1.2 Metal-Bearing Hazardous Wastes Managed For Metal Recovery 19
3.1.3 Summary of Metal-Bearing Hazardous Waste Generation and Recovery 20
3.2 Metal Recovery Alternatives: Use/Reuse of Metal-Bearing Hazardous Waste As An Ingredient In A Production Process Or A Substitute For A Commercial Product 21

3.3 Damage Incidents, Hazard Descriptions, Management Methods and Releases to the Environment By Metal-Bearing Hazardous Waste 24
3.3.1 Damage Incidents At Hazardous Waste Cites Involving Metal-Bearing Hazardous Wastes 25
3.3.2 Descriptions of Metal Constituents of Hazardous Waste 27
3.3.3 Management Methods and Estimates of Releases Resulting From Metal-Bearing Hazardous Wastes 28
3.3.4 Conclusions Regarding Damage Incidents, Hazard Descriptions, Management Methods and Releases To The Environment 30

4. RCRA Subtitle C Regulations Affecting Metal Recovery Of Hazardous Waste 32

4.1 Land Disposal Restrictions 32
4.2 Derived From Rule 34
4.3 Interim Status and Permitting 35
4.4 Financial Assurance 36
4.5 Corrective Action 37
4.6 Boiler and Industrial Furnace Rule 37
4.7 Hazardous Waste Transportation & Manifesting 39
4.8 Summary 39

5. Assessment of Impacts of RCRA Subtitle C Regulation on Metal Recovery From Hazardous Waste in the United States 41

5.1 RCRA Regulatory Incentives and Disincentives To Metal Recovery In The United States 42
5.1.1 Trade Association Information 43
5.1.1.1 Steel Manufacturers Association/Specialty Steel Industry of the United States (SMA/SSIUS) 43
5.1.1.2 American Iron and Steel Institute (AISI) 46
5.1.1.3 National Association of Metal Finishers 48
5.1.1.4 Association of Battery Recyclers (ABR)/ RSR Corporation 49
5.1.1.5 Metal Recovery Coalition 51
5.1.1.6 Summary and Analysis of Trade Association Information 54
5.1.2 Economic Analysis of RCRA Subtitle C Regulation on Selected Metal-Bearing Hazardous Wastes 55
5.1.3 Conclusions on Regulatory Incentives and Disincentives To Metal Recovery 58

5.2 Indirect Regulatory and Non-regulatory Factors Affecting Metal Recovery In The United States 58
5.2.1 Hazardous Waste Treatment and Disposal Costs 59
5.2.2 Metal Prices In The United States and Their Relationship To Metal Recovery of Hazardous Waste 61
5.3 Assessment of RCRA Subtitle C Regulation on Metal Recovery of Hazardous Waste:Spent Lead-Acid Batteries and Industrial Sludges, By-products and Spent Materials 66
5.3.1 Spent Lead-Acid Batteries 67
5.3.2 Industrial Sludges, By-Products and Spent Materials 70
5.4 Conclusion 75

6. Case Studies of Metal Recovery Operations Subject To RCRA Jurisdiction 76

6.1 U.S. Filter Recovery Services 77
6.2 Inmetco 83
6.3 Molten Metal Technologies Inc. 92
6.4 Horsehead Resource Development 105
6.5 East Penn Manufacturing Inc. 120

7. Assessment of U.S. Balance of Trade and Strategic Metals Issues and Their Relationship To Metal Recovery of Hazardous Wastes 131

7.1 U.S. Mineral and Metal Commodity Balance of Trade 131
7.2 Strategic Metals 136
7.2.1 U.S. Apparent Consumption of Strategic Metals 137
7.2.2 U.S. Net Import Reliance of Strategic Metals 143
7.2.3 National Defense Stockpile 146
7.2.4 Conclusion: Strategies To Increase Opportunities For Strategic Metal Recovery of Hazardous Wastes 147

8. Encouraging Environmentally Sound Metal Recovery 149

8.1 Current EPA Initiatives Encouraging Environmentally Sound Metal Recovery of Hazardous Waste 149
8.1.1 Definition of Solid Waste Task Force 149
8.1.2 Part 273 Special Collection System Regulations 150
8.1.3 Universal Treatment Standards For Metal Harzardous Constituents 151

8.2 Non-regulatory and Incentive-based Approaches To Encouraging Metal Recovery From Hazardous Waste 152
8.2.1 Non-regulatory Approaches To Encouraging Metal Recovery From Hazardous Wastes/Waste Exchanges 152
8.2.2 Incentive-Based Approaches To Encouraging Metal of Hazardous Wastes 154
8.2.2.1 Pollution Charges 156
8.2.2.2 Tradeable Waste Generation Permits and Recycling Credits 158
8.2.2.3 Deposit/Refund Programs 162
8.2.2.4 Removal of Federal Subsidies 164
8.2.2.5 Evaluation Criteria: Questions For The Policy Maker 166
8.2.2.6 Conclusion 166

9. Findings **167**

Notes **169**

Appendix A **A1**

Appendix B **B1**

Abstract

This report has been completed in response to Congressional requests for EPA to conduct a study on the effects of existing regulations on metal recovery of the Nation's wastes, how metal recovery can be encouraged and how these materials should be regulated to protect human health and the environment and to implement the Resource Conservation and Recovery Act's (RCRA) goals of resource conservation and protection of human health and the environment. EPA has completed its analysis of the effect of RCRA Subtitle C regulation on metal recovery of hazardous waste in the United States. Information evaluated in completion of this report indicates that RCRA Subtitle C regulation has signficantly contributed to increases of metal recovery of hazardous waste over 1980 levels primarily due to increased treatment and disposal costs which creates markets for metal recovery services. At the same time, RCRA Subtitle C regulation may inhibit metal recovery of hazardous wastes from reaching its potential due to regulatory disincentives to recovery. The main RCRA Subtitle C provisions indicated by industry as being problematic in this regard include the derived-from rule, permit requirements and facility-wide corrective action. Other disincentives cited include hazardous waste transportation cost, perceived Superfund liability resulting from hazardous waste management, and financial assurance. One case study of a metal recovery firm indicates that RCRA may also impede innovative technologies. The case study indicates that provisions in RCRA to encourage innovation such as research, development and demonstration permits and treatability exemptions are not adequate to encourage innovation.

The issue is one of balancing the need to control the hazards by hazardous wastes being recycled against the additional recycling that might occur with less onerous regulations. This is a difficult issue, one of great interest to many parties. EPA established a Task Force to address this issue, and sponsored a series of public roundtable discussions in the summer and fall of 1993 to better understand these issues through public involvement. EPA expects to make decisions on what regulations, if any, should be changed as a result of the Task Force process and has also initiated other steps to encourage environmentally sound recycling such as the proposed Special Collection System regulations.

Executive Summary

In 1992, Congress directed the Environmental Protection Agency (EPA) to conduct a study of how current hazardous waste regulations affect metal recovery of the Nation's waste, how metal recovery can be encouraged, and how such metal-bearing hazardous wastes should be regulated to protect human health and the environment as well as effectuate the resource conservation and recovery goals of the Resource Conservation and Recovery Act (RCRA). To complete this report, EPA reviewed relevant literature and consulted with the Departments of Interior and Commerce as well as members of the metal recovery industries. EPA has conducted a series of case studies of metal recovery operations in order to obtain case-specific information about how RCRA Subtitle C regulation affects their operation.

Under current RCRA Subtitle C regulation, metal recovery is one type of recycling (the use or reuse of a waste directly is the other) and can be defined as the recovery of metal as separate end products from a metal-bearing secondary material. Metal-bearing hazardous wastes comprise a wide variety of secondary materials including sludges, by-products, and spent materials. These wastes are often defined as hazardous because they leach heavy metals in excess of regulatory levels. These metals can include lead, chromium, cadmium, mercury, and arsenic. Because metals are elements, they cannot be destroyed and exist in perpetuity. They can be stabilized to prevent their release to the environment or recovered and reused again. When mismanaged, metal-bearing hazardous wastes have contaminated the surrounding environment. Some metal recovery operations are listed on the National Priorities List (NPL) for Superfund cleanup.

EPA determined that the best means to assess the impacts of Subtitle C on metal recovery would be to focus on materials that are currently regulated as hazardous waste. Therefore, this study focusses on secondary materials such as emission control dust from electric arc furnaces, spent lead-acid batteries, spent pickle liquor from steel finishing operations and wastewater treatment sludge from electroplating operations. These are examples of metal-bearing hazardous wastes which are currently subject to most or all RCRA Subtitle C regulatory requirements. (Note: spent lead-acid batteries being reclaimed are subject to reduced regulatory requirements prior to be being reclaimed).

According to EPA data, there are at least 8 million tons of metal-bearing hazardous waste generated annually. Some of these wastes are managed for recovery. Many of these wastes are not amenable to recovery either because they are too low in content of recoverable metals or because they contain too many impurities that would interfere with the recovery process. Currently, EPA estimates that 1.9 million tons of hazardous waste are managed for metal recovery. These wastes include spent lead-acid batteries, emission control dust from electric arc furnaces, wastewater treatment sludge from electroplating operations, spent pickle liquor from steel finishing operations and other wastes.

A number of RCRA Subtitle C regulations may affect metal recovery operations. Under RCRA Subtitle C, a generator of a metal-bearing hazardous waste has 90 days after generation to store wastes on-site in tanks, containers, or containment buildings. After that time the generator must either dispose of the waste on-site (either as non-hazardous waste or in compliance with applicable hazardous waste standards) or ship the waste off-site for storage, treatment, recovery or disposal. If shipped off-site, the generator must ship the waste under manifest by a hazardous waste hauler. All metal-bearing hazardous waste is subject to the applicable land disposal restriction (LDR) treatment standard. These standards specify either a technology (such as thermal recovery) or more commonly a performance level (either a total or extract level concentration) that must be met prior to land disposal.

When hazardous waste is shipped off-site for metal recovery, the metal recovery operation is required to have a permit if the waste is stored prior to recovery. RCRA storage permit requirements trigger other regulatory requirements such as facility-wide corrective action (requiring remediation of affected solid waste management units on-site) and financial assurance (requiring a financial mechanism to assure proper closure of facility operations). If the metal recovery operation does not store the waste prior to reclamation, it generally does not require a permit since the recycling process is generally not regulated under RCRA. One exception to this general rule is if the operation meets the definition of an industrial furnace and is not burning solely for metal recovery (e.g., the process also destroys hazardous organic constituents or is recovering fuel value). In this case, the metal recovery operation is subject to Boiler and Industrial Furnace Permit requirements. Finally, any residuals from a metal recovery operations must be managed as a hazardous waste if either it exhibits a hazardous characteristic (i.e., corrosivity, reactivity, ignitability, or toxicity) or it was derived-from a listed hazardous waste.

Industry has complained that RCRA Subtitle C regulation is too stringent and has served as a disincentive to metal recovery in the United States. Major RCRA Subtitle C disincentive identified include the derived-from rule, storage permit requirements and facility-wide corrective action. Trade associations representing generators of steel or electroplating wastes and trade associations representing metal reclaimers of spent lead-acid batteries and industrial sludges and by-products have indicated to EPA their view that high compliance costs and increasing liability risk from RCRA Subtitle C regulation has decreased metal recovery capacity in the United States and decreased capital investment for new projects in their respective industries.

In general, these representatives favored some form of conditional exclusion from RCRA Subtitle C jurisdiction or conditional exemption from RCRA Subtitle C regulation. They favored conditions resulting in self-implementing management standards for the wastes such as a time limit on accumulating wastes prior to recovery or banning storage wastes on the ground prior to recovery. They also support regulatory modifications to the permitting process and expanded federal guidelines on recycling and storage although these are generally regarded as less satisfactory than conditional exclusions and exemptions.

EPA's review of economic analysis completed for the Agency in 1991 indicates that under current RCRA Subtitle C regulation metal recovery is a more cost-effective management alternative than traditional treatment and disposal. Additional data shows that RCRA Subtitle C regulation (particularly the Land Disposal Restrictions program) encourages metal recovery of hazardous waste by increasing treatment and disposal costs which are substitute forms of management to recovery. Increases in world metal demand have also been an important factor in encouraging metal recovery.

For spent lead-acid batteries, current data indicate that recovery rates have remained high in spite of a recent decrease in the world price of lead. It appears that RCRA is not a disincentive and may actually encourage recovery of spent lead-acid batteries. For industrial sludges, by-products and spent materials, metal recovery levels have increased substantially from 1980 levels. EPA currently estimates that over 1 million tons of these materials were recovered in 1992. In 1980, the GAO reported that fewer than 15,000 tons of metal (from an estimated 100,000 tons of waste) were being recovered from industrial sludges, by-products and spent materials.

While on balance RCRA Subtitle C regulation has contributed to increased metal recovery in the United States since 1980, some regulatory provisions may have constrained additional metal recovery capacity in the United States. It is possible that RCRA has made metal recovery in the United States less profitable than it would otherwise be. The derived-from rule that requires residuals from listed wastes to be managed as hazardous wastes, facility-wide corrective action and RCRA permit requirements are among the most expensive and time consuming provisions in RCRA to comply with. However, these are also among the most important provisions to prevent or remediate releases to the environment of metal-bearing hazardous wastes. Any proposals to modify these provisions must carefully evaluate the net benefits, if any, of the modification resulting from any additional metal recovery against any increased risk to public health and the environment due to any increase in the likelihood or severity of a release.

Conclusions from EPA's examination of case studies of metal recovery operations corroborate EPA's findings that RCRA has mixed effects in terms of providing incentives or disincentives to metal recovery. To assess the broadest possible impact of RCRA on different types of metal recovery operations, EPA completed case studies on a diverse selection of metal recovery operations with different processes and stages of commercial development. Each case study indicated a series of RCRA Subtitle C incentives and disincentives to metal recovery with varying impacts on the operation as a whole.

As other data have indicated, case study subjects benefited from markets created for their services largely due to RCRA treatment and disposal standards. However, case study subjects were also burdened with cost and liability concerns from the derived-from rule for process residuals. One case study subject, Molten Metal Technology, indicates that RCRA provisions to encourage innovative technologies may not be working adequately to meet that goal.

In addition to environmental benefits obtained from it, metal-recovery of hazardous waste may help to ameliorate the U.S. balance of trade deficit of mineral and metal commodities. Nickel, copper, zinc, lead and iron may be found in sufficient quantities in metal-bearing hazardous wastes to contribute to increased supplies of these materials for domestic consumption or export.

Metal recovery of hazardous wastes can also play an important role in conservation of strategic metals such as chromium, cobalt, manganese and platinum. Strategic metals are metal commodities that perform critical functions in the U.S. economy and which the U.S. is largely dependent on imports from vulnerable supplies from politically instable sources. More specifically, EPA data indicates that there are large quantities of chromium-bearing wastes generated in the United States. Chromium is an important strategic material used as an alloy for corrosion resistance in steel production.

Metal recovery from hazardous waste may be encouraged directly through changes to existing command and control regulation such as self-implementing standards or through non-regulatory and incentive-based approaches such as waste exchanges, pollution fees and transferable waste permits. EPA is currently conducting on-going activities to optimize environmental protection and safe recycling of hazardous wastes. These activities include the Definition of Solid Waste Task Force, the proposed Part 273 Special Collection System regulations, and the proposed universal treatment standards for metal hazardous constituents under the Land Disposal Restriction program. EPA has also provided financial support for non-regulatory approaches such as waste exchanges. The Agency has also examined a number of possible incentive-based approaches to encourage metal recovery in completion of this report. These incentives include pollution fees, tradeable permits, deposit-refund systems and removal of federal subsidies for production of virgin metals. Each approach has its own advantages and limitations depending upon the objectives sought and implementation required.

Based on information collected and analyzed in completion of this report, EPA finds the following with respect to metal recovery of hazardous waste and its relationship to RCRA Subtitle C regulation:

1. **RCRA Subtitle C regulation includes both incentives and disincentives to metal recovery of hazardous waste. Overall, RCRA Subtitle C regulation has been a substantial contributing factor to the increase in metal recovery of hazardous waste over 1980 levels.**

2. **RCRA Subtitle C regulation is also apparently constraining metal recovery from reaching its potential in the United States. Compliance costs and liability concerns with RCRA Subtitle C regulation may limit waste generators selection of metal recovery as an option. These costs and concerns also limit the ability of metal recovery operations to expand their capacity and invest in new projects.**

3. **RCRA Subtitle C regulation may inhibit innovative metal recovery technologies. RCRA regulatory provisions designed to encourage innovation such as the treatability exemption and the research, development and demonstration permits may not always be adequate to encourage innovation.**

4. **Notwithstanding the disincentives posed by RCRA Subtitle C regulation, damage incidents (including Superfund sites) involving metal recovery operations indicate that mismanagement of these materials can pose a significant risk to human health and the environment. For this reason, proposals to modify RCRA Subtitle C statutory or regulatory authority must assess the benefit of reduced compliance cost and liability from Subtitle C regulation against any incremental increase in risk due to reduced regulatory requirements. EPA has created the Definition of Solid Waste Task Force to assess these types of proposals.**

5. **Recovery of metals from metal-bearing hazardous waste has the potential to ameliorate the current U.S. balance of trade deficit. It may also become an important source of supply of strategic metals, particularly chromium.**

6. **Available data shows that metal recovery of hazardous waste should continue to increase in the 1990's as landfill capacity decreases and alternative forms of management are increasingly needed to support the U.S. hazardous waste management system.**

7. **EPA is currently in the process of conducting a series of activities which may encourage environmentally sound metal recovery of hazardous waste. These activities include the Definition of Solid Waste Task Force, proposed Special Collection System regulations, and proposed Universal Treatment Standards for hazardous wastes. EPA expects that each of these activities may encourage environmentally sound recycling.**

Chapter 1 Introduction and Overview to Metal Recovery of Hazardous Waste and Resource Conservation and Recovery Act Hazardous Waste Regulation

The United States Environmental Protection Agency (EPA) has developed this report pursuant to EPA's appropriation bill PL-102-389, signed by President Bush on October 9, 1992. This law requires EPA to conduct a report to: 1) assess the effect of existing regulations on efforts to recover metals from the Nation's wastes, 2) determine how such metal recovery can be encouraged, 3) determine how these materials should be regulated to protect human health and the environment and to effectuate the resource conservation and recovery goals of the Resource Conservation and Recovery Act (RCRA, 42 U.S.C. §§ 6901 to 6992k). PL-102-389 also directs EPA to consult with the Secretary of Commerce, the Secretary of Interior, the metals recovery industry and other interested parties. Upon completion of the report, EPA is required to submit its findings and recommendations to the Senate Committee on Environment and Public Works and the House Committee on Energy and Commerce.

Prior to passage of the appropriation bill in February 1992, EPA had committed to studying the relationship between metal recovery of hazardous waste and RCRA Subtitle C hazardous waste regulation. EPA initially committed to studying this issue as part of the RCRA Reform Initiative to evaluate RCRA Subtitle C regulatory impacts on the competitiveness of U.S. industries. The assumption underlying the study of this issue has been that RCRA Subtitle C regulation may be needlessly limiting metal recovery capacity in the United States from reaching its potential. Metal recovery as described in this report is believed to have important benefits for society including conserving hazardous waste landfill capacity, providing alternative sources of supply for strategic metals, mitigating our balance of trade deficit for metal commodities and creating new opportunities for investment for U.S. business. Metal recovery may also be more environmentally protective than traditional treatment and disposal although this depends on how metal-bearing hazardous wastes are managed.

The report is organized as follows. This chapter provides an introduction and overview of issues addressed in this report, including a definition of metal recovery, the relationship between metal recovery and pollution prevention, discussion of technologies for recovering metals from hazardous waste, an overview of metal-bearing hazardous wastes and an overview of RCRA Subtitle C regulatory requirements that impact metal recovery from hazardous waste. Chapter 2 discusses this report's methodology and limitations. Chapter 3 provides a characterization of metal-bearing hazardous waste including quantities generated and recovered, environmental risks posed by metal-hazardous waste and related issues. Chapter 4 provides a review of RCRA Subtitle C regulations affecting metal recovery of hazardous waste.

Chapter 5 provides an assessment of the effects of existing RCRA Subtitle C regulations on metal recovery of hazardous waste. Chapter 6 includes five case studies of metal recovery operations in the United States and how RCRA Subtitle C has affected their operations. Chapter 7 reviews the relationship between metal recovery of hazardous waste and balance of trade and strategic metals issues. Chapter 8 reviews ongoing EPA activities and other strategies to encourage environmentally sound metal recovery from hazardous waste including non-regulatory and incentive-based alternatives. Chapter 9 contains EPA's findings to Congress.

1.1 Description of Hazardous Waste/Terminology

Under RCRA, **hazardous waste** is defined as "a solid waste or combination of solid wastes which...may ... cause or significantly contribute to an increase in mortality or an increase in serious irreversible , or incapacitating reversible illness or... pose a substantial present or potential hazard to human health or the environment when improperly treated, stored, transported, or disposed of, or otherwise managed" (42 U.S.C. §6903(5). As specified under RCRA Subtitle C, hazardous wastes are regulated by EPA (40 CFR Parts 260 to 272).

Under current EPA regulation, a solid waste may be hazardous in one of two ways. It may be **listed** by EPA through describing the materials from non-specific sources (F code wastes), specific sources (K code wastes) or commercial chemical products (P or U wastes). An example of a listed waste is K061, emission control dust from electric arc furnaces in steel production. A solid waste may also be a hazardous waste if it **exhibits a characteristic** for ignitability, corrosivity, reactivity or toxicity (D wastes). An example of a characteristic waste is D007, chromium-bearing wastes. Currently, there are eight metals that EPA has determined toxicity characteristic levels for: arsenic, barium, cadmium, chromium, lead, mercury, selenium and silver (although a metal-bearing hazardous waste may exhibit a hazardous characteristic for reasons other than the metals contained). There are number of listed hazardous wastes that contain metal constituents. These are described in greater detail in Chapter 3.

Metal-bearing hazardous wastes refers to any RCRA Subtitle C hazardous waste that contains metal. It may or may not be amenable to recovery. Metal-bearing hazardous wastes are a subset of the larger group of **metal-bearing secondary materials** that also includes non-hazardous metal-bearing secondary materials. For purposes of this report, metal-bearing secondary materials refer to any material that contains metal and is not a raw material. Certain metal-bearing secondary materials are not considered to be hazardous wastes when managed for metal recovery such as characteristic sludges and by-products. Other materials such as scrap metal are exempt from Subtitle C hazardous waste regulation when reclaimed. These secondary materials are fully regulated as hazardous wastes when disposed of, used on or applied to the land, burned for energy recovery, used to produce a fuel or speculatively accumulated.

Because metal-bearing secondary materials such as characteristic sludges, characteristic by-products and scrap metal are closely related to metal recovery of hazardous wastes, these materials will be referred to in this report as **related secondary materials**.

1.2 Overview of Metal-Bearing Hazardous Wastes

This section provides background on metal-bearing hazardous wastes in the United States and aspects of their management for recovery or treatment and disposal. More detailed information on selected metal-bearing hazardous wastes is provided in Chapter 3. Metal-bearing hazardous wastes encompass a wide variety of materials. These can include process wastes like emission control dusts and wastewater treatment sludges or spent materials used in commerce such as solvents used for degreasing machinery or spent batteries. The hazardous metal constituents of these wastes include mercury, arsenic, chromium, cadmium, lead, nickel, barium, selenium, antimony, thallium, beryllium, and vanadium. These materials may or may not contain hazardous organic constituents. In contrast to hazardous organic constituents in hazardous wastes, hazardous metal constituents in metal-bearing hazardous wastes cannot be destroyed. They can only be reused or stabilized and disposed of to prevent exposure.

Not all metal-bearing hazardous wastes are amenable to recovery. Some metal-bearing hazardous wastes cannot be recovered or reused either because their metal content is too low or because of significant quantities of impurities or contaminants that cannot be removed due either to economic or technical limitations. Metal reclaimers usually set specifications for materials that they will process. Most often these specifications relate to levels of contaminants in feed material that can interfere with the process (e.g. limits on chlorides to prevent hydrochloric acid from forming in a furnace).

Often, the metal constituents being recovered from a metal-bearing hazardous waste is not the same metal constituents that make the waste hazardous. For example, for K061, emission control dust from electric arc furnaces, the primary metal constituents that are recovered are usually iron and nickel alloys or zinc. Two of the primary hazardous constituents of K061, lead and cadmium, are not the metal constituents initially recovered although the hazardous constituents may be shipped off site for further recovery. When the metal constituents that are recovered from a metal-bearing hazardous waste are primarily non-hazardous, the fate and transport of the **hazardous constituents** in the process becomes a concern. Rather than accompanying the recovered material, the hazardous constituents may partition to recycling process residuals such as slag or emission control sludge. If mismanaged, these constituents may pose a risk to human health or the environment through release to groundwater, surface water, crop uptake, air dispersion or direct human contact.

1.3 Definition of Metal Recovery

Under EPA regulations **recycling** is defined as either the **use, reuse or reclamation** of a material (40 CFR §261.1(c)(7)). Metal-bearing hazardous wastes can be recycled either through **reclamation** or through the **use or reuse of the material**. EPA defines reclamation as either **recovery** of useful product or **regeneration** of a product for its original use (40 CFR §261.1(c)(4)). Examples of recovery and regeneration are recovering zinc from emission control dust from a brass foundry (provided it is not land applied) or regenerating a spent solvent for its original use.

Under EPA's hazardous waste regulations, **metal recovery** is defined as the recovery of distinct components of a secondary material as separate end products (40 CFR § 261.1(c)(5)(i)). Metal recovery is a type of **reclamation** and is distinguished from **the use or reuse of the material**. An example of metal recovery of hazardous wastes is the smelting of lead plates from spent lead-acid batteries to recover lead values.

A secondary material may be used or reused either as **an ingredient in an industrial process to make a product** or as **an effective substitute for a commercial product**. An example of the use or reuse of metal-bearing hazardous waste as an ingredient in an industrial process is using electric arc furnace dust as an ingredient in the production of cement or fertilizer. An example of the use or reuse of a metal-bearing hazardous waste as a effective substitute for a commercial product is spent pickle liquor from steel finishing operations as a phosphorous precipitant and sludge conditioner in wastewater treatment.

Reclamation (including metal recovery) and the use or reuse of metal-bearing secondary materials to make a product are generally regulated differently by RCRA Subtitle C. Depending upon the type of material, materials being reclaimed can be solid wastes (that are also hazardous wastes) within RCRA Subtitle C jurisdiction. This is considered true for spent materials, listed sludges and by-products and scrap metal. Sludges and by-products that are characteristically hazardous (i.e., reactive, toxic, corrosive or ignitable) but not listed and commercial chemical products are not solid or hazardous wastes when reclaimed (40 CFR §261.2(c)(3)). (Please note that even though scrap metal being reclaimed is within RCRA Subtitle C jurisdiction, these materials are not currently subject to any Subtitle C regulatory requirements, 40 CFR §261.6(a)(3)(iv)). In contrast, when secondary materials that would otherwise be hazardous wastes are used to make new products without distinct components of the materials being recovered as end products, EPA generally considers this to be a type of direct use that is usually not considered to be a type of waste management (50 FR 633, January 4, 1985).

Accordingly, secondary materials are not considered to be solid waste when they are: 1) used as ingredients in an industrial process to make a product provided the materials are not being reclaimed, 2) used or reused as effective substitutes for commercial products or 3) returned to the original production process from which they were generated without first being reclaimed (40 CFR §261.2(e)). This does not apply to secondary materials that are either placed or applied on the land (although secondary materials applied in this manner are subject to reduced RCRA regulatory requirements), burned for energy recovery or used to produce a fuel.

This report concerns the metal recovery of hazardous waste and the effects RCRA Subtitle C regulation on such recovery. In Chapter 3, this report will discuss the use of metal-bearing hazardous waste as an ingredient to make a product as an alternative to metal recovery to assist understanding in possible policy outcomes that could result from Subtitle C regulatory modifications.

1.4 Relationship Between Metal Recovery and Pollution Prevention of Metal-Bearing Hazardous Wastes

This section outlines the relationship between pollution prevention and metal recovery of metal-bearing hazardous wastes. Traditionally, metal recovery of hazardous wastes has been viewed in contrast to other pollution management alternatives such as traditional treatment and disposal or other forms of recycling such as use as an ingredient. Because of limited capital for pollution prevention and management, proposals for regulatory or statutory modifications to encourage metal recovery that consider disposal as the only alternative to recovery may inadvertently undermine efforts to encourage pollution prevention. Because metal recovery is one form of recycling in a hierarchy between pollution prevention and traditional waste treatment and disposal, this section reviews the statutory basis for pollution prevention and reiterates the importance of viewing metal recovery broadly in order to consider its relationship to both pollution prevention and treatment/disposal.

1.4.1 RCRA Philosophy on Resource Conservation

The Congress stated its national goals for the RCRA statute in § 1003(a) (42 U.S.C. 6902(a)) as promotion of health and environmental protection, and conservation of "valuable material and energy resources." With respect to metal recovery of hazardous wastes, these goals support a general presumption toward keeping metals in the stream of commerce through minimizing their land disposal or other release to the environment.

Relative to hazardous wastes, the 1984 amendments to RCRA explicitly stated the concept of eliminating or reducing wastes in the first place. In the 1984 amendments, the Congress declared that the reduction or elimination of hazardous waste generation at the source should take priority over the management of hazardous wastes after they are generated. In particular, Section 1003(b), 42 U.S.C. 6902(b), of RCRA provides:

> The Congress hereby declares it to be the national policy of the United States that, wherever feasible, the generation of hazardous waste is to be reduced or eliminated as expeditiously as possible. Waste that is nevertheless generated should be treated, stored, or disposed of so as to minimize the present and future threat to human health and the environment.

In this declaration, the Congress established a clear national priority for eliminating or reducing the generation of hazardous wastes. At the same time, however, the national policy recognized that some wastes will "nevertheless" be generated, and such wastes should be managed in a way that "minimizes" present and future threat to human health and the environment.

To the extent that metal-bearing hazardous wastes can be reduced or eliminated from generation in the first place, the policy confirms the Act's objective of conserving resources, including metals, that would otherwise enter the nation's waste streams. Those metal-bearing hazardous wastes that cannot be prevented from being generated should be managed so that health and the environment are protected.

Examples of organizations which generate metal-bearing hazardous wastes, and which have taken specific measures to reduce or eliminate those wastes, are listed in Appendix A to this report. The examples listed in Appendix A show situations in which natural resource use decisions resulted in cost savings.

1.4.2 Pollution Prevention Act Policy, Source Reduction And Its Relationship To Metal Recovery of Hazardous Waste

In 1990, the Congress further clarified the role of pollution prevention in the nation's environmental protection scheme, by passing the Pollution Prevention Act (PPA) (Public Law 101-508, 42 U.S.C. 13101, et seq.). In Section 6602(b) of this law, 42 U.S.C. §13101(b), the Congress stated that:

> [T]he national policy of the United States [is] that pollution should be prevented or reduced at the source whenever feasible; pollution that cannot be prevented should be recycled in an environmentally safe manner, whenever feasible; pollution that cannot be prevented or recycled should be treated in an environmentally safe manner whenever feasible; and disposal or other release into the environment should be employed only as a last resort and should be conducted in an environmentally safe manner.

Thus, the Congress set up a hierarchy of management options for pollutants in descending order of preference: prevention or source reduction, environmentally safe recycling, environmentally safe treatment, and environmentally safe disposal. This hierarchy is consistent with the national policy stated in RCRA; it essentially expresses a preference for reducing generation of wastes and related secondary materials, and then for recycling them in a manner that will be protective of human health and the environment, over using them and then treating them and discarding them.

The PPA[1] defines the term "source reduction" as:

> "any practice which (i) reduces the amount of any hazardous substance, pollutant, or contaminant entering any waste stream or otherwise released into the environment (including fugitive emissions) prior to recycling, treatment or disposal; and (ii) reduces the hazards to public health and the environment associated with the release of such substances, pollutants, or contaminants. The term includes equipment or technology modifications, process or procedure modifications, reformulation or redesign of products, substitution of raw materials, and improvement in housekeeping, maintenance, training or inventory control. ...The term "source reduction" does not include any practice which alters the physical, chemical or biological characteristics or the volume of a hazardous substance, pollutant or contaminant through a process or activity which itself is not integral to and necessary for the production of a product or providing of a service."

There is still considerable discussion about whether and what type of on-site recycling activities may qualify as either "pollution prevention" or "source reduction". However, there is general agreement that source reduction includes material substitution, process modification, modified operating practices.

Material substitution involves replacing high toxicity feedstocks with those that are less toxic or non-toxic (or those that generate less waste). Process modifications involve changes to the equipment that lead to the reduced generation of wastes. Modified operating practices are changes that are dependent upon human participation to effect a reduction in waste generation.[2] The metal finishing/electroplating industry has several examples of each type of source reduction. Materials substitution alternatives do exist for metal production operations, although these alternatives primarily focus on reducing non-metal-bearing wastes such as wastewater or eliminating the use of toxics. Examples in the plating industry include the use of deionized water to reduce the generation of waste solutions, and the use of non-cyanide plating solutions and trivalent chromium plating and chromating solutions to reduce the generation of cyanide and hexavalent chromium.

Process modifications in the plating industry include the use of drain boards to catch drips and re-direct them back to the correct process bath, modified rinse techniques (agitation, flow restrictors, conductivity cells, spray and air rinses, and multiple rinse-tanks) and dragout recovery tanks to recapture process solution. These techniques tend to focus on forms of recovery that reduce the generation of wastewater and loss of process solution. Such modifications reduce the generation of metal-bearing waste by reducing the volume of the metal-bearing wastestream that is disposed and recovering the metals within those streams.

The third method for reducing metal-bearing waste generation is altering operating practices. For the plating industry alternatives include improving controls on process solutions, prolonging withdrawal and drain times, reducing rinse (i.e., contact) time, orienting the process to retain process solution, and improved housekeeping and employee training and education.

Since this report focuses on encouraging metal recovery (a type of recycling) relative to treatment and disposal, it is important to recognize the potential disincentive to source reduction through encouraging metal recovery of hazardous waste. In evaluating the cost-effectiveness of source reduction options, businesses generating hazardous waste may compare the cost of alternatives to source reduction; recycling, treatment and disposal. If the cost of either recycling or treatment/disposal is significantly less than source reduction, this may serve as a disincentive to source reduction. So, while encouraging environmentally sound metal recovery may be generally preferable to treatment and disposal of metal-bearing hazardous waste, it may also be a potential disincentive to source reduction.

Given the national policies on pollution prevention that have been stated in environmental legislation, the question that arises is how to alter the structure of U.S. laws and regulations in a manner that provides incentives for reducing metal-bearing hazardous wastes at the source, and also provides incentives for recovering metal-bearing hazardous wastes. The difficult policy issue involved in addressing the issue is how to modify RCRA statutory authority or Subtitle C regulation in a manner that protects human health and the environment through taking advantage of both source reduction and metal recovery opportunities. It is an issue that although EPA has identified, the Agency has not yet finalized an approach to assure that incentives for source reduction are maintained if compliance costs for metal recovery are substantially reduced. EPA will continue to study this issue in order to develop approaches to implement the hierarchy established by Congress in the PPA.

1.5 Overview of Metal Recovery Technologies

While a thorough discussion of metal recovery technologies for hazardous wastes is beyond the scope of this report, this section provides a brief description of various metal recovery technologies that are available for hazardous waste.[3] To simplify this discussion, most metal recovery technologies for hazardous wastes can be classified into one of two general types of extractive metallurgy: 1) pyrometallurgy or 2) hydrometallurgy. Please note as mentioned above in Section 1.2 that applying these technologies to any metal-bearing secondary material may be limited by technical and/or economic factors such as the level of recoverable metals in the material or the amount of contaminants that may preclude recovery.

1.5.1 Pyrometallurgy

Pyrometallurgy is defined by the American Society of Metals (ASM) as the "high temperature winning or refining of metals".[4] Pyrometallurgical technologies "uses heat to separate desired metals from undesired constituents based on differences between constituent oxidation potential, melting point, vapor pressure, density, and/or miscibility when melted".[5] Examples of pyrometallurgical processes include drying, calcining, roasting, sintering, retorting, smelting.

Drying is used to remove bulk water from wet concentrates, ores and fluxes. These processes usually operate near the boiling point of water. **Calcination** involves heating a metal-bearing material around 1000°C to 1500°C to cause metal carbonates to form metal oxides.

Roasting is a process where a metal-bearing material is heated to just below the melting point in the presence of a gas to cause a chemical change to remove impurities such as sulfur from the material. Roasting differs from calcination in that the latter heats material without adding air or oxygen to the charge.

Sintering is one form of roasting where temperatures are raised high enough to cause a partial fusion of the feed materials to form a "sinter" or "sintercake".[6] Sintering is used to process feed materials for further pyrometallurgical recovery to eliminate particulates that might partition to the off gases of the process.

Retorting refers to the distillation of metals in a vessel to reduce them above their boiling point from a metal oxide or other compound to a base metal form (e.g., elemental mercury). Previously common for zinc refining, retorting is now used commonly for mercury.

Smelting is a generic term for applying heat and a reductant to a metal to reduce it to elemental form. For example, adding coke (carbon formed without oxygen) and iron ore (in the form of an iron oxide) to form elemental iron.

1.5.2 Hydrometallurgy

Hydrometallurgy is defined by ASM as the "industrial winning or refining of metals using water or an aqueous solution".[7] Hydrometallurgical technologies "separate desired metals from undesired constituents based on differences between constituent solubilities and/or electrochemical properties in aqueous solutions (or organic solutions in the case of solvent extraction)".[8] Examples of hyrdometallurgical processes include leaching, chemical precipitation, electrolytic recovery, membrane separation, ion exchange, and solvent extraction.

Leaching refers to dissolving a solid material into solution using a solvent, usually a strong acid or base material such as sulfuric acid or ammonia.

Chemical precipitation involves the addition of substances to metals suspended in solution to cause the metals to separate from solution through sedimentation. Substances used to precipitate metals out of solution include caustic soda, lime, ferrous and sodium sulfide, soda ash, sodium borohydride, and sodium phosphate. One common application is for chemical precipitation is removing metals from electroplating wastewaters.

Electrolytic recovery or **electrowinning/electrodialysis** involves running an electric current through an aqueous solution to charge suspended metals which then deposit onto a plate immersed in the solution with an opposite charge.

Membrane separation technologies such as microfiltration, ultrafiltration and reverse osmosis are means of physically separating metals from solution through various types of filters. This form of technology is commonly used with chemical treatment for rinse waters.

Ion exchange involves suspending a medium, either a synthetic resin or mineral, into solution where suspended metal ions in solution are exchanged onto the medium with hydrogen or hydroxyl ions which transfer into the solution. Metal ions that are exchanged onto the exchange medium can be regenerated through leaching or other processes.

Solvent extraction uses either an organic or aqueous solvent to selectively extract metals from solid, liquid or sludge material.

Both pyrometallurgical and hydrometallurgical process have been used for years to extract, beneficiate and process primary metals from raw ores. More recently, these technologies have been applied with varying degrees of success to metal-bearing hazardous wastes. Rather than being used separately, these processes are used in combination with one another to produce finished metals available for commerce.

1.6 Overview of RCRA Subtitle C Provisions Affecting Metal Recovery From Hazardous Waste

This section provides an overview of RCRA Subtitle C regulations that currently affect metal recovery. Chapter 4 will discuss the most significant RCRA regulatory provisions such as, land disposal restrictions (related to residual management costs at metal recovery operations), the derived-from rule, permitting, and corrective action in more detail.

A number of regulatory incentives currently exist in Subtitle C to encourage environmentally sound metal recovery of hazardous waste. As discussed in Chapter 5, the greatest regulatory incentive in RCRA Subtitle C are the combination of increasing hazardous waste disposal costs and rising treatment costs. The latter are largely attributable to the **Land Disposal Restriction (LDR) treatment standards**. These standards specify either performance or technology standards that must be met for restricted wastes prior to land disposal.

An example of a performance standard is requiring that a lead-bearing hazardous waste cannot leach more than 5 parts per million prior to land disposal. Often, to meet a performance standard, some form of treatment such as stabilization is required. A technology standard requires that a particular form of technology such as incineration or high temperature metal recovery be used prior to any land disposal.

LDR treatment standards encourage metal recovery of hazardous waste in two ways. These treatment standards have added significantly to treatment and disposal costs of metal-bearing hazardous wastes which has forced generators of these materials to consider metal recovery as a cost-effective management alternative. Also, a limited number of treatment standards under the Land Disposal Restrictions specify recovery for metal-bearing wastes including lead-bearing and cadmium-bearing batteries, high mercury-bearing wastes and emission control dust from secondary lead smelting. Thus, in both ways, LDR treatment standards have contributed to the creation of markets for metal recovery services.

A second regulatory incentive is the **exemption for scrap metal that is reclaimed** from Subtitle C regulation. This exemption was promulgated with the amended definition of solid waste in 1985 to ensure that scrap metal being reclaimed was not inhibited by RCRA regulation.

Another regulatory incentive is the **conditional exclusion from the definition of solid waste for sludges and by-products that are characteristically hazardous (e.g., leaching hazardous metal constituents above regulated levels) that are reclaimed**. This exclusion provides that characteristic sludges and by-products that would be hazardous wastes if disposed of, burned for fuel or placed on the land are excluded from RCRA Subtitle C jurisdiction when reclaimed. Although this exclusion was developed for jurisdictional purposes, it appears to have had a substantial impact on metal recovery of these materials.

A fourth regulatory incentive is that persons who generate, transport or store but do not reclaim **spent lead-acid batteries that will be reclaimed** are exempt from certain Subtitle C regulations including manifesting and storage permit requirements (40 CFR §266.80). This provision has been promulgated to encourage efficient collection of these batteries prior to reclamation. EPA has also recently proposed a rule that accomplish the same result for cadmium-bearing batteries.

A fifth regulatory incentive to encourage metal recovery in RCRA Subtitle C is the precious metal exemption. Under Subtitle C, persons who generate, transport or store precious metal-bearing wastes for **precious metal recovery** are subject only to notification and limited reporting requirements (40 CFR §266.70). This exemption has been promulgated because EPA recognizes that these materials are valuable and are likely to be managed in a manner that minimizes their potential for loss.

A related regulatory variance exists for **partially-reclaimed secondary materials**, which is available for metal-bearing as well as other secondary materials. Materials that have been reclaimed but must be reclaimed further, including secondary metal concentrates, that would otherwise be solid and hazardous wastes, may be excluded from the definition of solid waste through a variance procedure at the discretion of the Regional Administrator (40 CFR § 260.30).

While normally a hazardous waste being reclaimed remains a hazardous waste until the reclamation process is complete, some partially-reclaimed materials may be more commodity-like (e.g., managed in a manner to minimize loss) than waste-like and qualify for the variance.

A seventh regulatory incentive under RCRA Subtitle C is that **the recycling process itself** is generally not subject to regulation although, as mentioned below, storage prior to metal recovery is a regulated and permitted activity (40 CFR §261.6(c)(1)). One exception to this general rule is that pyrometallurgical metal recovery operations may be subject to **Boiler and Industrial Furnace (BIF) requirements**. However, metal recovery operations are conditionally exempt from recently promulgated BIF requirements when burning solely for metal recovery (e.g., not energy recovery or destruction).

Slag generated from **high temperature metal recovery of electric arc furnace dust (K061), wastewater treatment sludge from electroplating operations (F006) and spent pickle liquor from steel finishing operations (K062)** that is disposed of in RCRA Subtitle D (i.e., non-hazardous) landfill may be generically excluded provided it meets specified health-based levels.

The regulated community has also identified a number of RCRA Subtitle C requirements that are **impediments** to metal recovery. These provisions are described in greater detail in Chapter 4. Briefly, the most important of these regulatory impediments includes the derived-from rule which affects the status of process residuals, storage permit requirements, facility-wide corrective action and financial assurance.

The **derived-from rule** states that residuals from processing listed metal-bearing hazardous waste, such as slag from metal recovery operations, remain hazardous waste and must be managed in compliance with Subtitle C regulations (40 CFR Part 261.3(c).

A second regulatory disincentive may be **storage permit requirements** for metal-recovery operations that store metal-bearing hazardous wastes prior to reclamation (40 CFR Part 261.6(c)(1). Industry has commented that the permitting process is expensive and time-consuming.

Additional impending Subtitle C regulatory requirements that metal recovery operations that are regulated as TSDFs have identified include **facility-wide corrective action and financial assurance** requirements. Facility-wide corrective action would require a metal recovery operation that stores prior to reclamation, in a manner for which it would require a RCRA permit, to address **all** solid waste management units within facility boundaries such as waste piles or surface impoundments without regard to the current owner/operator's responsibility for creating these units.

These units would be subject to corrective action if hazardous waste or constituents of hazardous waste are released to the environment. Such facilities are also subject to financial assurance requirements to ensure environmentally sound closure and post-closure care along with financial assurance for any corrective action obligations.

Both facility-wide corrective action and financial assurance requirements are statutorily mandated for owner/operators of permitted facilities (RCRA §§ 3004(a),(t),(u),(v), 3005(a);42 U.S.C. §§ 6924(a),(t),(u),(v) 6925(a)). For metal recovery of hazardous wastes, facilities usually become subject to facility-wide corrective action and financial assurance requirements when the facility is required to obtain either a storage permit or a Boiler and Industrial Furnace permit when the facility is not burning solely for metal recovery.

Chapter 2 Report Methodology And Limitations

The purpose of Chapter 2 is to lay out the scope and approach of this report and explain how EPA plans to respond to the issues Congress directed the Agency to study in PL-102-389. Chapter 2 will also discuss some of the limitations of this report as well as major sources of uncertainty surrounding the analysis.

Congress directed EPA to study three issues in PL-102-389 in October 1992: 1) the effect of existing regulations on efforts to recover metals from the Nation's wastes, 2) how such metal recovery can best be encouraged, and 3) how the materials should be regulated in order to protect human health and the environment and effectuate the resource conservation and recovery goals of the Resource Conservation and Recovery Act. The main question Congress seemed to be asking was whether changes in Subtitle C regulation could be expected to increase metal recovery. As discussed below, the Agency has attempted to answer this question, but due to many data limitations, the Agency can only answer in a general sense.

The scope of wastes that EPA has chosen to study are metal-bearing hazardous wastes that are subject to most or all Subtitle C regulatory requirements. These include listed metal-bearing hazardous wastes and spent materials that are hazardous wastes when reclaimed, such as spent-lead acid batteries. Due to time and resource constraints, EPA believes that Subtitle C wastes that are subject to most or all Subtitle C regulation would emphasize regulatory effects more clearly than other metal-bearing secondary materials that are subject to comparatively fewer regulations because managing these wastes entails greater regulatory compliance cost.

2.1 Data Sources and Limitations

EPA has tried to use a diversity of approaches to address the questions raised by Congress. To study these questions, EPA has conducted data collection and research through literature search, consultation with experts both within EPA and other Federal agencies, and outreach with representatives of the metal recovery industry, generators of metal-bearing hazardous wastes and state regulatory agencies.

EPA has used in-house resources to complete on-line data base searches and literature searches from its library system to retrieve relevant studies, articles and reports on the metal recovery of hazardous waste. EPA has consulted with the Department of Interior and the Department of Commerce. EPA has conducted informal briefings for both Departments and has consulted with them through peer review of portions of this report.

EPA has also consulted the regulated community and selected state governments in completion of this report. EPA has reviewed information submitted by trade associations representing generators and reclaimers of metal-bearing hazardous waste and information provided by case-study respondents. Time limitations and limited data availability affected the quality of some of the submissions. In addition, EPA has completed five case studies of metal recovery operations to provide case specific information on the effect of RCRA Subtitle C regulation on metal recovery of hazardous waste. Drafts of case studies in Chapter 6 were peer reviewed by both the respondent as well as the state regulatory agency responsible for oversight of the facility. EPA has not conducted audits or other verification of claims made by case study respondents and trade association respondents. Trade association responses are discussed generally throughout the report and specifically in Chapter 5. Case studies are presented in Chapter 6.

These approaches have enabled EPA to analyze the issue of how RCRA Subtitle C regulations affect metal recovery of hazardous waste. The Agency has tried to look not only at regulatory impacts on metal recovery of hazardous waste, but also, where possible, market factors related to metal demand that may affect the end uses and demand for recovered metals. As mentioned below, both economic and technical feasibility are important independent factors affecting metal recovery of hazardous waste.

The Agency has looked at data on the generation and management of metal-bearing hazardous wastes between 1980 and 1989. One limitation of analysis is that the most current data are over three years old, preceding the March 1990 Toxicity Characteristic (TC) rule. This rule revised the testing procedure for determining whether or not a waste exhibits a toxic characteristic (i.e., leach amounts of toxic constituents above regulated levels in simulated landfill conditions; the new procedure is called the Toxicity Characteristic Leaching Procedure or TCLP). The data examined under this report were subject to the old extraction procedure (EP) toxicity test. Because materials that would be non-hazardous under the EP test may be hazardous under the TCLP (the TCLP is generally regarded as the more conservative test of the two), the current universe of metal-bearing hazardous waste subject to Subtitle C regulation may be much larger than the data analyzed in this report.

Data limitations have affected the level of analysis throughout this report. Determining how RCRA Subtitle C regulation affects metal recovery of hazardous wastes is difficult due to data limitations and uncertainty resulting from independent factors influencing metal recovery such as world metal demand. In the process of completing this report, EPA has identified several data limitations to a more accurate evaluation of metal recovery of hazardous waste and related secondary materials.[9] These limitations include:

- limits on data to determine what proportion of particular hazardous waste stream is technically amenable to recovery,

- limits on data to evaluate and quantify the metal recovery of related secondary materials such as scrap metal and characteristic sludges and by-products that would be regulated as hazardous wastes if discarded in a manner other than reclamation,

- limits on data to accurately determine recovery rates for all metal-bearing hazardous wastes and related secondary materials including materials recovered and reinserted into the original production process.

EPA has used, where feasible, other data bases such as the Toxics Release Inventory to draw inferences where more direct data is not available.

2.2 Other Factors Affecting Metal Recovery

In the course of doing this report, EPA learned that identifying the impacts of Subtitle C regulations on metal recovery is quite a complex task. One should note that a major limitation in answering the question of how RCRA Subtitle C regulation affects metal recovery from hazardous waste is the uncertainty in distinguishing between RCRA Subtitle C regulation and other statutory/regulatory requirements and non-regulatory factors (non-RCRA factors) affecting metal recovery from hazardous wastes. Other statutes and regulations affecting metal recovery frequently mentioned during EPA's report include Superfund (the Comprehensive Environmental Response, Compensation and Liability Act or CERCLA), Clean Water Act, and the Clean Air Act. State and local government regulation may also affect metal recovery operations.

The main non-regulatory factors affecting the metal recovery of hazardous waste are the technical and economic feasibility of applying metal recovery technologies to hazardous wastes. The technical feasibility of recovering metals addresses the question of whether or not a given hazardous waste is amenable for recovery. Some metal-bearing hazardous wastes may not be recovered either because they do not contain recoverable levels of metals or because they are so contaminated with undesirable constituents that they cannot be processed sufficiently to make them saleable in the market.

In traditional microeconomic analysis, one would expect that the economic feasibility of a metal recovery operation will depend upon the owner/operator making sufficient revenue to cover the total cost of operation plus a fair return on the investment. Metal recovery operations processing hazardous wastes can derive revenue in one of two ways: 1) user fees, and 2) sale of recovered metals. The operation can charge a user fee to generators of hazardous waste to process it and/or it can gain revenue through the sales of its recovered product. In most cases, sufficient revenues must be obtained from this fee to make the operation profitable. Few metal recovery operations processing hazardous waste are profitable solely on the sale of recovered metals. (Precious metal reclaimers may be the exception to this case). The user fee that a metal recovery operation can charge a generator of hazardous waste depends largely on the fees charged for alternative management methods of the waste: traditional treatment and disposal, or use as an ingredient.

To minimize costs, a generator of hazardous waste will generally evaluate the alternatives available and select the most cost-effect alternative. Of course, there are factors other than cost which may influence this decision such as perceived long term liability of disposal, and land disposal restrictions requirements specifying recovery of hazardous waste as the treatment standard prior to land disposal. One point worth noting is that one of the main ways in which RCRA Subtitle C has encouraged metal recovery of hazardous waste is by raising treatment and disposal costs increasing the viability of metal recovery as an alternative. This is elaborated on in Chapter 5.

The revenue that a metal recovery operation can obtain through the sale of its recovered products depends upon world market conditions for metal commodities. Other things being equal, a higher price for metals will encourage metal recovery; a lower price will discourage it. Market price for metal is a function of both supply and demand for metals. Market demand for metal commodities is a function of global economic activity and the availability of non-metal substitutes for metal end uses (e.g., substituting plastic for metal in automobiles). Market supply of primary metals is a function of short term and long term factors. Short term factors include labor disputes, political conflicts, liquidation of commodity stockpiles and natural disasters. Long term factors may include proven commodity reserves and development of new technologies for extracting metal from ores.

Both regulatory and non-regulatory factors limit EPA's ability to accurately answer the questions of how RCRA Subtitle C affects metal recovery and how metal recovery can be encouraged. These non-RCRA factors will independently encourage or discourage metal recovery irrespective of whatever regulatory modifications for RCRA Subtitle C the Agency may propose.

2.3 Summary of Impact of Data Limitations

For all of these reasons, EPA cannot accurately predict that a certain amount of additional metal recovery will result from a specific change in RCRA Subtitle C regulations. Where possible, EPA will identify in this report how non-RCRA factors have or may affect metal recovery. Therefore, regulatory modifications to RCRA Subtitle C may be necessary, but not sufficient, conditions to encourage increased environmentally sound metal recovery. Where possible, however, EPA has identified areas where metal recovery may be increased, at least in a qualitative sense.

Chapter 3 Characterization of RCRA Subtitle C Metal-Bearing Hazardous Waste

Chapter 3 describes the characteristics and provides background information of metal-bearing hazardous wastes evaluated in this report. This description includes information about the types and quantities of the wastes generated, recovery rates of these materials where this information is available, damage incidents at hazardous waste sites from metal recovery operations, metal hazard descriptions, releases to the land of metals, elaboration on the use of metal-bearing hazardous waste as an ingredient in a production process as an alternative to metal recovery (e.g., metal-bearing hazardous waste used to produce cement vs. recovery to produce metal).

3.1 Metal-Bearing Hazardous Wastes: Generation and Recovery

This section summarizes available data on metal-bearing hazardous wastes and related secondary materials, including the quantity generated as well as the type and quantity of these materials managed for recovery, and metals recovered. To obtain the information available on metal-bearing hazardous waste, EPA has consulted three sources: 1) 1989 Biennial Reporting Systems (BRS) data on metal recovery[10], 2) industry/trade association estimates submitted in completion of this report [11], and 3) engineering firms and consulting firms knowledgeable regarding metal recovery of hazardous waste.[12]

3.1.1 Quantities of Metal-Bearing Hazardous Wastes Generated

This subsection provides estimates of metal-bearing hazardous wastes generated in the United States. The scope of wastes described in this subsection is limited to the types of metal-bearing hazardous wastes that may be amenable to metal recovery. For example, K048-K052 are metal-bearing petroleum wastes that are generally not considered amenable to metal recovery. They are not included in this subsection. Also, certain hazardous wastes and related metal-bearing secondary materials are not included in this data because they are exempt from the reporting requirements, e.g., such as scrap metal (exempt from BRS reporting and exempt from RCRA regulation when destined for reclamation), characteristic sludges and by-products destined for reclamation (not a solid waste, exempt from BRS reporting).

Table 3-1 summarizes 1989 Biennial Reporting Systems data analyzed in completion of this report on quantities of metal-bearing hazardous waste generated in the United States. These wastes were selected as metal-bearing hazardous waste streams that may have portions that are amenable to recovery. As is true with any estimate, the quantities listed in Table 3.1 are approximations of the actual quantity of waste generated, but it gives the reader general information on quantities generated. The estimated 8.224 million tons of these metal-bearing hazardous waste represent 4.2 percent of the total 197.5 million tons of hazardous waste generated.

Table 3.1 Estimated Quantities of Selected Metal-Bearing Hazardous Waste In The U.S.

Waste Code/Description	Quantity In Short Tons
1. D004/Characteristic Arsenic Waste	482,737
2. D005/Characteristic Barium Waste	16,184
3. D006/Characteristic Cadmium Waste	274,252
4. D007/Characteristic Chromium Waste	3,016,404
5. D008/Characteristic Lead Waste	1,121,555
6. D009/Characteristic Mercury Waste	17,895
7. D010/Characteristic Selenium Waste	392,255
8. F006/Wastewater Treatment Sludge From Electroplating Operations	1,252,072
9. F007/Spent Cyanide Plating Bath Solutions From Electroplating Operations	92,757
10. F008/Bottom Plating Bath Residues From Electroplating Operations	11,895
11. F019/Wastewater Treatment Sludge From Conversion Coating of Aluminum	51,879
12. K061/Emission Control Dust From Electric Arc Furnaces In Steel Production	550,000
13. K062/Spent Pickle Liquor Generated From Steel Finishing Operations	904,945
14. K069/Emission Control Dust From Secondary Lead Production	3126
15. K071/Brine Purification Muds From Chlorine Production	23,881
16. K088/Spent Potliners From Primary Aluminum Production	11422
17. K106/Wastewater Treatment Sludge From Chlorine Production	826
Total	8,224,085

3.1.2 Metal-Bearing Hazardous Wastes Managed For Metal Recovery

Based on literature reviewed, 1989 BRS data and information provided by trade association, EPA estimates that approximately 1.9 million tons of metal-bearing hazardous waste are annually managed for metal recovery. This estimate represents a partial estimate for six metal-bearing hazardous waste categories of the total amount of hazardous waste being managed for metal recovery. This is true because of the BRS limitations identified above and because the trade association information was submitted within a relatively short time frame with available data. It is likely that this estimate underestimates the true quantity of these wastes being managed for metal recovery.

This estimate also excludes metal-bearing hazardous wastes that are: 1) exempt from regulation (including BRS reporting) such as scrap metals or 2) related secondary materials such as characteristic sludges and by-products that would be hazardous wastes if disposed of but are excluded from the definition of solid waste because they are reclaimed and are therefore not reported. Also, some metal recovery operations will not comply with BRS reporting requirements, thus excluding their metal recovery from EPA data. Table 3.2 summarizes the amount and type hazardous wastes and related secondary materials being reclaimed as well as the recovery rate (where available) and metals recovered.

Table 3.2 Estimated Quantities of Hazardous Wastes And Related Secondary Materials Managed For Metal Recovery

Type of Waste	Quantity Managed For Metal Recovery (000 Tons)	Recovery Rate (Percent of Total Managed For Metal Recovery)	Metals Recovered
K061/Electric Arc Furnace Dust	500	90	Zn, Pb, Cr, Cd, Ni, Fe
F006/Wastewater Treatment Sludge From Electroplating Operations	163 (EPA estimate)	15 to 20 percent (NAMF estimate)	Zn, Cd, Fe, Cr, Ni, Cu, Ag, Au
K062, Spent Pickle Liquor From Steel Finishing Operations	193 (AISI, SMA estimate)	52 of reported subtotal of K062; total recovery rate probably lower	Fe, Cr, Ni
Miscellaneous Characteristic Metal-Bearing Hazardous Wastes	164.6 (BRS estimate of mixed D wastes)	unknown	Cr, Pb, other
Nickel-cadmium batteries	1.686	23.5,[13] (EPA 1993)	Ni, Cd
Spent-lead acid batteries	873 (BCI estimates)	96.5 percent (1991 National Recycling Rate Study, BCI 1993)	Pb
Total	1895.28	23 percent	

3.1.3 Summary of Metal-Bearing Hazardous Waste Generation and Recovery

Based on data reviewed in completion of this report, large quantities of metal-bearing hazardous wastes are not being managed for metal recovery, but rather for treatment and disposal. While the exact proportion is not known, many of these wastes are not technically amenable for recovery either because they are too contaminated with impurities or because they are too low in metal content.

These wastes will continue to be treated and disposed of irrespective of what regulatory modifications are made to RCRA Subtitle C until new technologies are developed to make these wastes amenable to recovery. Other metal-bearing hazardous wastes that are amenable to recovery are being treated and disposed of currently and may be a potential source for increased recovery in the future resulting from regulatory modifications to RCRA Subtitle C.

While data limitations preclude estimating quantities of metal-bearing hazardous wastes that are amenable to recovery but managed for disposal, information submitted by trade associations to EPA (and discussed in more detail in Chapter 5) indicates that lead based paint remediation waste, K062 spent pickle liquor from steel finishing wastes, F006 wastewater treatment sludge, brass foundry waste, ferrous foundry waste, surface finishing waste, galvanizing waste and others may be in plentiful supply (i.e., well over 1 million tons total generated annually). As mentioned later in this report, opportunities to facilitate this recovery may depend as much on markets for recovered metals as it does on regulatory modifications to RCRA Subtitle C. Of the waste streams EPA identified in Table 3.2, F006, wastewater treatment sludge from electroplating operations, may have the greatest potential for additional recovery. With an estimated recovery rate of only 15 to 20 percent, the 1.2 million tons F006 generated annually represents the second largest metal-bearing hazardous waste stream identified in this report (behind characteristic chromium wastes).

3.2 Metal Recovery Use or Recycling Alternatives: Use/Reuse of Metal-Bearing Hazardous Waste

As mentioned in Chapter 1, EPA considers recycling under Subtitle C to include the use, reuse, or reclamation of secondary materials which may or may not be considered hazardous wastes under RCRA depending on how the materials are managed. The importance of understanding the distinction between the use or reuse of a secondary material and the reclamation of secondary materials is that any changes to RCRA Subtitle C regulation that affect metal recovery (a type of reclamation) may influence quantities of secondary materials managed for use or reuse as well.

The use or reuse of metal-bearing secondary materials as ingredients in an industrial process or a substitute for a commercial product (hereafter referred to as use/reuse) represents an alternative form of management to either metal recovery or traditional hazardous waste treatment and disposal. As mentioned in Chapter 1, EPA traditionally views use/reuse as being more similar to a normal production process in contrast to reclamation which is considered to be more similar to waste management activities. EPA made this distinction in the 1985 modifications to the definition of solid waste largely on a jurisdictional basis rather than a risk basis. This difference has lead to different status under RCRA Subtitle C regulation.

Metal recovery is a type of reclamation and is subject to some RCRA Subtitle C regulation (e.g., storage prior to reclamation) for many types of secondary materials. Notable exceptions include characteristic sludges and by-products being reclaimed (which are not solid wastes and therefore not hazardous wastes) and scrap metal being reclaimed (which are solid and hazardous wastes but are currently exempt from Subtitle C regulation).

In contrast to metal recovery, the use or reuse of a secondary material as either an ingredient in an industrial process or as an effective substitute for a commercial product are generally not within the definition of solid waste (40 CFR §261.2(e)(1)). As mentioned in Chapter 1, this general rule does not apply to the use or reuse of secondary materials used directly in a manner constituting disposal or used to produce products that are applied to the land, burned directly for energy recovery or used to produce a fuel, that are speculatively accumulated or are inherently waste-like (40 CFR §261.2(e)(2)).

Products derived from hazardous wastes that are recycled by being used on the land are conditionally exempt from full RCRA Subtitle C regulation. These waste-derived products must be available for the general public's use, have undergone a chemical reaction to become inseparable by physical means, and (with the exception of K061 derived fertilizer) must meet treatment standards specified in Part 268 of the Code of Federal Regulations (or RCRA Section 3004(d) where no treatment standard is specified).

The result of the difference in regulatory status between use/reuse and reclamation is that the current RCRA Subtitle C regulatory structure may do more to encourage use/reuse than reclamation. Since the use/reuse of metal-bearing hazardous wastes are generally excluded from the definition of solid wastes, this form of management is not subject to any RCRA Subtitle C regulatory requirements.

By contrast, the process of reclaiming metal-bearing hazardous waste is generally exempt from regulation (BIF permit requirements are one exception). However, residues from the reclamation process are still subject to the derived-from rule and storage prior to reclamation is subject to Subtitle C regulation including permit requirements. Due to time and data limitations, EPA has not reached a conclusion as to whether this difference under the current Subtitle C regulatory structure is warranted.

Reliable estimates of the types or quantities of metal-bearing hazardous wastes that are recycled through use or reuse and related secondary materials recycled through use or reuse that would be hazardous wastes if otherwise managed are not available. Most of both types of materials are not subject to Agency reporting requirements such as the Biennial Reporting System. Through experience, the Agency has learned that much of the use/reuse of metal-bearing hazardous wastes has involved using these materials as ingredients in fertilizer, construction materials such as cement or aggregate.

The following example illustrates how a generator of a listed metal-bearing hazardous waste may choose to recycle the waste. K061 is an emission control dust from electric arc furnaces and the particulate matter is captured in an air pollution control device called a "baghouse". This pollution control dust is composed of various metals: zinc, lead, cadmium, iron and sometimes nickel and chromium. EPA has listed the waste as hazardous and set a treatment level for K061 extracts (i.e., leachate) based upon high temperature metal recovery (40 CFR §268.41). The generator (the operator of the steel mill) can select any management method for K061 so long as it meets this treatment standard for leachate prior to land disposal. As an alternative to stabilization and land disposal, a generator might select one of a variety of recycling alternatives (assuming it is legitimate) for the K061. Recycling alternatives for K061 could include:

- use as fertilizer
- use as an ingredient in glass frit for abrasive blast, roofing shingles, glass ceramic or ceramic glaze
- use as an ingredient in the production of cement
- use an ingredient in the production of aggregate
- management for zinc recovery, lead recovery, cadmium recovery, or ferronickel or ferrochromium recovery.

Although EPA has a general preference for environmentally sound recycling over treatment and disposal, the Agency has not studied the issue to determine whether reclamation of metal value is preferable to use or reuse of a material in its entirety as a substitute for a nonwaste material from a policy standpoint. Much depends upon the specific waste and recycling alternative and attendant risks and benefits. The K061 generator will select his management alternative for disposal or recycling in part on prospective liability and compliance costs (as a function of total cost). If the generator selects recycling as its choice, each recycling alternative would have a distinct impact on society in terms of the risk to human health and the environment as well as the value of the material recovered or used. These impacts may present tradeoffs that need to be considered to determine how these materials should be regulated to optimize RCRA's dual goals of environmental protection and resource conservation.

These tradeoffs may involve amenability of the material to future recovery (i.e., keeping the metal in commerce perpetually), the quality of material recovery (i.e., recycling a material for its highest use as opposed to downgrading a material to a lower value use), risk to human health and the environment (note: it is possible that some forms of treatment and disposal may be more protective than some forms of recovery).

In the example of K061 mentioned above, the zinc constituents of the waste may serve adequately, if recovered, as a zinc oxide or zinc metal for medicinal or manufacturing uses. The end use of the zinc may leave it in a form where it is amenable for further recovery such as galvanizing (i.e., the zinc in the scrap metal may be recovered) or put to an end use such as fertilizer where the zinc values are ultimately lost to the environment. Alternatively, if the K061 is used directly to make cement, the iron constituents of the waste may contribute to the production of the cement, while the zinc constituents may be downgraded to a lower value use relative to recovered zinc metals or compounds.

The risks to human health and the environment from the zinc recovery operation and the cement kiln may vary as well as the value of material recovery for the zinc constituents. In this example, the mobility of hazardous metal constituents in the waste-derived cement product would be compared with exposure from both slag from the zinc recovery operation as well as the end use of the recovered zinc itself.

In sum, one management option may offer superior material recovery but may or may not necessarily be more environmentally protective. Due to data limitations, an evaluation of these tradeoffs for metal-bearing hazardous waste streams is beyond the scope of this report.

3.3 An Overview of Damage Incidents, Hazard Descriptions, Management Methods and Releases to the Environment By Metal-Bearing Hazardous Waste

In order to understand how RCRA Subtitle C regulation of metal-bearing hazardous wastes may protect human health and the environment, it is necessary to understand how these materials may become a problem if mismanaged. Evaluating damage incidents at hazardous waste sites involving metal recovery, descriptions of the intrinsic hazards of metal constituents of hazardous waste, and estimates of releases to the environment of metals from hazardous waste support concerns about the mismanagement of metal-bearing hazardous waste. This section provides a perspective of how metal-bearing hazardous wastes have affected human health and the environment when mismanaged, what hazards are intrinsic in the metals themselves, how these materials are supposed to be managed currently, and what releases to the environment are currently on-going.

EPA has analyzed three sources of damage incidents involving metal-bearing hazardous waste: the Records of Decision (RODS) Data Base, involving NPL sites; the Damage Incident Data Base (DIDB), and the RCRA Implementation Study Update: The Definition of Solid Waste (Environmental Damages Caused by Hazardous Waste Recycling Practices). EPA also reviewed epidemiological literature regarding public health and hazardous waste to evaluate the relative impact of metals from hazardous waste on public health.[14]

To assess the intrinsic hazard of various metals, EPA reviewed relevant literature. Finally, EPA examined 1991 Toxic Release Inventory (TRI) data of releases to land and off-site transfers to estimate total loadings of hazardous metals constituents from hazardous wastes. It is possible that a portion of these loadings are not attributable to hazardous waste, so this indicator can only serve as an estimate or proxy of releases to the environment from metal-bearing hazardous wastes.

3.3.1 Damage Incidents At Hazardous Wastes Sites Involving Metal-Bearing Hazardous Waste

In 1991, the National Research Council of the National Academy of Sciences reported that heavy metals that were relatively prevalent at Superfund sites and which are toxic included lead, chromium, arsenic, cadmium, and nickel.[15] The report did not contain further information on the risks posed by these metals. The National Research Council also indicated that a significant number of activities at Superfund sites involved recycling operations (for metal and non-metal materials) and activities related to the generation of metal-bearing hazardous waste.

1991 EPA data reported in the National Research Council study indicated that over 9 percent of 1189 final Superfund sites involved recycling operations (including recycling of non-metals).[16] 1988 EPA data indicated that activities at 1177 proposed and final Superfund sites related to the generation of metal-bearing hazardous waste included 63 electroplating activities, 36 ore processing/refining smelting activities, and 23 battery recyclers .[17] Finally, the National Research Council report adapted 1989 ASTDR data involving documented migration of hazardous substances into specific media from 951 selected Superfund sites. The data involving metal migration is summarized below in Table 3.3.

EPA has recently compiled a list of damage incidents resulting from recycling operations.[18] A subset of these damage incidents have resulted from or are associated with metal recovery operations. To update this effort, EPA examined the RODS and DIDB data bases to retrieve more specific information about damage incidents associated with Superfund sites and other hazardous waste sites. These analyses revealed 38 sites including 21 Superfund sites where contamination of heavy metals was associated with metal recovery operations.

In some of the cases, activities other than metal reclamation occurring on site may have contributed to or been the cause of the metal contamination. Also, other releases from metal recovery activities such as fugitive air emissions may be responsible for contamination.

Table 3.3 Migration of Hazardous Metals Into Media At Superfund sites[1]

Metal	# of Sites with migration	Ground water	Surface water	Soil	Air	Food	Sediment
Lead	327	234	138	122	37	50	114
Chromium	224	159	84	88	28	39	84
Arsenic	(1)36*	92	46	54	16	19	50
Cadmium	112	72	49	45	18	21	44
Mercury	58	29	24	20	6	10	19
Nickel	55	30	24	15	3	8	21
Beryllium	9	2	3	1	0	0	3

* Although the text indicates **36** sites rather than **136**, this appears to be a typographical error since the number of migration sites for each media exceed the number of total sites with migration. Since arsenic is located between chromium with 224 total sites and cadmium with 112, the correct number of total arsenic sites appears to be 136.

The database searches were not exhaustive and only a limited keyword search was used. These results may underestimate the total number of hazardous waste sites associated with metal recovery operations. The searches revealed limited information about the type of metal recovery operations involved at the site and the environmental risks or level of contamination at the site, or the type of activity at the site (e.g., processing, storage, spills, etc.).

Approximately 19 of the 38 sites involved lead recovery from spent lead-acid batteries. Generally, the site contamination resulted from improper disposal of battery casings (the outer shell of the battery after the lead plates have been removed) and battery acid. The abstracts of the site incidents indicated that soil and groundwater contamination resulted from the mismanagement. Other anecdotal information indicated air quality problems, increased facility employee blood lead levels and harming vegetation (e.g., killing cyprus trees) next to the facility.

Of the remaining 19 non-battery hazardous waste sites involving metal recovery, the activities there are as follows:

1 copper smelting facility
2 secondary copper recovery facilities
1 stainless steel slag recovery operation
2 precious metal recovery operations

---

[1] Please note that the total number is less than the sum of all media because each site may include more than one type of medium of migration.

1 brass reprocessing operation
1 aluminum processing facility
1 drum recycling facility
1 metal and plastic parts manufacturing facility
1 titanium dioxide manufacturing plant
3 scrap metal operations including an auto salvage yard
1 steel emission control dust recovery operation
2 miscellaneous metal recovery operations
2 hazardous waste treatment facilities (the nature of metal recovery occurring at these sites, if any, is not clear from the abstract)

Based on the data, the environmental contamination and risks associated with these hazardous wastes appear to be comparable to the battery hazardous waste sites. Soil and groundwater contamination are the most prevalent types of contamination. In selected cases, public health may be threatened by site proximity to public drinking water wells.

This review of hazardous waste sites involving metal recovery indicates that when metal-bearing hazardous wastes being recovered are mismanaged that the resulting releases to the environment may threaten public health. It is also evident that the risk of mismanagement occurs across a variety of different types of metal recovery operations. However, it is not possible from this data to estimate the current population at risk from metals at hazardous wastes sites.

3.3.2 Descriptions of Metal Constituents of Hazardous Waste

Risk of metal-bearing hazardous waste is a function of the intrinsic hazard of the metal constituents of the waste and the **potential for exposure** of the material. This section summarizes relevant hazard information on selected metals.[19] Section 3.3.3 will describe current management methods and summarize the most current release information for these metals. Table 3.4 summarizes basic information regarding the uses and hazards associated with metal constituents found in hazardous waste. More detailed information on these metals is provided in Appendix B.

Table 3.4 Common Uses and Hazard Description of Metal Constituents Found In Hazardous Wastes

Metal	Common Uses	Hazard Description
Lead	batteries, solder, ammunition	acute and chronic toxin, symptoms: nerve & kidney dysfunction; brain damage
Cadmium	batteries, pigments, plastics	acute & chronic toxin, symptoms: nausea & abdominal pain; linked to kidney disease, heart disease, emphysema; possible carcinogen
Arsenic	wood preservatives, pesticides, electronics	acute & chronic toxic, symptoms: shock, coma, death; Class A carcinogen
Chromium	steel alloy, metal plating	hexavalent form is toxic; Class A carcinogen; ecotoxin
Mercury	batteries, electrical uses, chlorine manuf., light bulbs	neurotoxin, symptoms: memory loss, motor disturbances, kidney damage, death; ecotoxin
Nickel	steel alloy, batteries, electroplating	toxicity in nickel carbonyl or high doses; possible carcinogen
Selenium	colored glass, photocells, semi-conductors,	acute & chronic toxin, recorded cases are rare; ecotoxin
Zinc	metal alloy	low risk of toxicity in humans; ecotoxin
Barium	electric tubs, radium carrier	acute toxin
Beryllium	copper alloy, ceramics	acute & chronic toxin, probable human carcinogen

3.3.3 Management Methods and Estimates of Releases Resulting From Metal-Bearing Hazardous Wastes

EPA has reviewed literature to attempt to estimate potential releases of metal constituents from hazardous wastes. Data has been limited in this regard. The Agency has used 1991 Toxic Release Inventory (TRI) data listed in Table 3.5 below for this purpose.

After viewing how releases to the environment of metal-bearing hazardous waste have affected the environment when mismanaged, it is important to note how metal-bearing hazardous wastes are supposed to be handled in light of current RCRA Subtitle C management standards as well as potential routes of exposure that may potentially pose a risk to human health or the environment.

Frequently, metal-bearing hazardous wastes that are solid (i.e., not wastewaters) are in the form of sludges from pollution control devices or by-products from production processes. These materials may be stored by the generator for up to 90 days in a tank, container or containment building provided they comply with management standards for these units.

Generators will frequently treat characteristic wastes on-site in tanks and then dispose of the residuals in Subtitle D facilities (e.g., landfills) either on-site or off-site. Alternatively, generators may elect to ship hazardous waste off-site in containers for treatment/disposal or recovery/reuse. Containers used to ship metal-bearing hazardous wastes off-site often include 55 gallon drums.

At off-site treatment, storage, or disposal facilities (TSDFs), metal-bearing hazardous wastes are off-loaded from hazardous waste transporters into storage areas where the materials are either stored until a sufficient quantity of the material is accumulated for processing or the materials are pre-processed for insertion into the treatment or reclamation process. Storage at these facilities in units other than tanks or containers is generally prohibited (40 CFR §268.50). This means that managing these wastes in outdoor waste piles would not permissible under current Subtitle C regulation.

The problem that RCRA Subtitle C regulation has tried to address in the handling of metal-bearing hazardous wastes is the release of metal constituents of the waste to the environment. There are several **routes of exposure** that are of potential concern including air releases from metal dusts, migration into groundwater, and surface water runoff. Other routes of exposure include crop uptake and soil ingestion (children). Humans are exposed to metal constituents from these routes through ingestion, inhalation or dermal contact.

In trying to evaluate the potential environmental impact of metal-bearing hazardous wastes, EPA looked at recent data from the Toxics Release Inventory (TRI)[20] to analyze estimates of total releases of metals and their compounds to land and off-site transfers. Releases to land and off-site transfers represent a surrogate for loadings to the environment from metal-bearing hazardous waste. However, TRI releases are <u>not</u> equivalent to exposure of hazardous wastes and so this data cannot be equated with risks to human health and the environment associated with these metals. As stated in the 1991 TRI Release Inventory, risk is a function of many factors including the toxicity of the chemical, persistence of the chemical in the environment, bioconcentration in the food chain and the environmental medium to which the chemical has been released.[21] Releases in TRI may include disposal of metal-bearing hazardous wastes in landfills or treatment in surface impoundments. Because design standards of these units and prior treatment of the wastes, the metal constituents themselves may be immobilized thus minimizing their risk to the environment.

TRI data is limited to manufacturing firms and so releases of metals from the service sector may not be included in TRI. Notwithstanding this limitation, the 1991 TRI data summarized in Table 3.5 show that the following metals and metal compounds released to land or transferred off-site for treatment or disposal (in thousands of pounds).

Table 3.5 Releases To Land and Off-site Treatment and Disposal of Selected Metals

Metal & Compounds	Release To Land/Offsite Transfers For Treatment and Disposal/**Total** (in thousands of pounds)
Zinc and zinc compounds	123,279/55,294/**178,573**
Chromium and chromium compounds	25,916/19,942/**45,858**
Lead and lead compounds	17,022/20,053/**37,075**
Barium & barium compounds	4,266/19,716/**23,982**
Nickel and nickel compounds	1,672/8,966/**10,638**
Arsenic and arsenic compounds	4,473/2,189/**6,662**
Cadmium and cadmium compounds	251/1407/**1,658**
Mercury and mercury compounds	5/193/**198**
Beryllium and beryllium compounds	59/120/**179**
Selenium and selenium compounds	80/59/**139**

3.3.4 Conclusions Regarding Damage Incidents, Hazard Descriptions, Management Methods and Releases to the Environment of Metal-Bearing Hazardous Wastes

Notwithstanding the prevalence of damage incidents associated with spent lead-acid battery recovery, it appears that the potential for mismanagement of hazardous wastes handled for metal recovery extends across a variety of many different metal recovery operations. From the damage incident abstracts, it appeared that most of the mismanagement occurred from abandoning wastes on site in piles or in surface waters where the material dispersed quickly. The most prevalent form of contamination mentioned was groundwater contamination.

The hazards posed to human health or the environment by different metal constituents of hazardous waste are also varied including acute and chronic toxicity, neurotoxicity, carcinogenicity, and ecotoxicity. Under RCRA Subtitle C management, metal-bearing hazardous wastes are supposed to be managed properly from generation until discard or recovery to prevent the release of these constituents.

In terms of estimated releases to the environment, one observation that becomes apparent when viewing the Tables in Chapter 3 is that from a quantitative standpoint, **chromium** and **lead** are the two most prevalent toxicity characteristic metals in terms of generation of characteristic metal wastes, prevalence in Superfund sites, or TRI release estimates. The other observation that follows is that lead appears to be recovered at greater rates than chromium due to the high recovery rates of K061 and spent-lead acid batteries. Chromium recovery is comparatively low owing in part to low F006 and D007 recovery. The importance of chromium as a strategic metal and opportunities for its recovery are mentioned in Chapter 7 of this report.

Chapter 4. RCRA Regulations Affecting Metal Recovery Operations

This chapter summarizes how several key RCRA regulatory provisions apply to metal reclamation. In general Subtitle C regulations were developed to protect human health and the environment, with some consideration given to the regulatory impact on recycling. The regulations discussed here are the ones thought to have the greatest impact on metal recovery of hazardous wastes. EPA determined this from information submitted by trade associations, economic data and related sources. Chapter 5 will assess the impact of these provisions on metal reclamation of hazardous waste.

At the outset it is important to note that, as discussed above, EPA chose to focus on hazardous wastes that are fully regulated under Subtitle C for this report. Therefore, the regulations governing metals reclamation discussed below do not apply to the reclamation of precious metals or scrap metal. Precious metals reclamation is subject to a reduced set of requirements under 40 CFR Part 266, Subpart F.[22] Scrap metal destined for recycling is exempt from Subtitle C regulation under 40 CFR §261.6(a)(3)(iv). Both of these industries have voiced concerns with the impacts of RCRA and CERCLA on their operations, but given limited time, EPA decided to focus on industries more fully regulated under RCRA. Also, it is important to recognize that metals reclamation is conducted in both on-site (i.e., at the same facility that generates the metal-bearing waste) and off-site processes. In general, on-site recycling is regulated somewhat less stringently than is described below. Also, metal recovery may be conducted in many steps which may all be on the same site but also may entail shipment of some sidestreams to off-site reclaimers. This affects storage permit requirements and the need for transportation.

4.1 Land Disposal Restrictions

The Land Disposal Restrictions (LDR) program, added to RCRA by the Hazardous and Solid Waste Amendments (HSWA) of 1984, requires that hazardous wastes that are to be land disposed[23] must meet treatment standards prior to disposal. The LDR program mandates that prior to land disposing of a hazardous waste the waste must either: contain concentrations of specified hazardous constituents in either the waste extract (i.e., leachate) or the wastes (i.e., total constituent concentration) that are below specific levels established by EPA; or, have been treated using a specific treatment technology designated by the Agency.[24]

Both the concentration-based standards and the treatment technologies designated under the LDR program are those determined by EPA to constitute levels or methods of treatment that substantially reduce the toxicity of the waste and reduce the likelihood of migration of hazardous constituents from the waste, thereby minimizing any threat posed by such waste to human health and the environment. These standards are considered to represent performance achieved using the best demonstrated available technology (BDAT).

The LDR standards have been implemented under a phased schedule. Most, but not all, of the standards are presently in place. Table 4-1 lists several of these metal-bearing wastes and the Federal Register notice containing the corresponding LDR treatment standards.

Table 4.1 Examples of Metal-bearing Wastes and Corresponding BDAT Publication Dates

Metal-Bearing Wastes	Federal Register Publication
F006, K004, K008, K061, K062, K069, K100, K048, K049, K050, K051, K052	53 FR 31137; 8/17/88
F006, F007, F008, F009, F010, F011, F012, F019, K005, K007	54 FR 26593; 6/23/89
F006, K060, K002, K003, K004, K005, K006, K007, K008, Characteristic Wastes	55 FR 22519; 6/1/90

Since many metal-bearing wastes are RCRA hazardous wastes[25], the LDR regulations apply to certain aspects of the generation, transport, and reclamation of these wastes. For example, generators of hazardous metal-bearing waste must determine if their waste is subject to the LDR and whether the waste meets LDR treatment standards. If the waste is restricted and does not meet LDR standards, the generator must provide a notice to the treatment or storage facility (i.e., reclamation facility) indicating the applicable treatment standards and applicable waste prohibition levels. Restricted wastes that meet LDR standards must be accompanied by a notice and certification of compliance with applicable standards. Generators must also maintain all data pertaining to the regulatory status of the waste as well as all notices, certifications, and other required documentation.

LDR requirements applicable to recycling (i.e., reclamation) facilities prohibit the storage of hazardous wastes restricted from land disposal unless the wastes are stored in tanks, containers, containment buildings or drip pads and such storage is solely for the purpose of accumulating sufficient quantities of hazardous wastes as are necessary to facilitate recovery, treatment, or disposal. If such storage is for purposes of legitimate accumulation, storage may occur for up to a year unless the Agency can demonstrate that storage for extended periods of time is not necessary. Where the owner/operator can prove that such extended storage is necessary to facilitate the recovery, treatment, or disposal of these wastes, storage may be conducted for longer than one year. As applied to reclamation, this restriction prohibits the storage of metal-bearing waste directly on the land in waste piles and/or surface impoundments and limits the flexibility of facilities storing metal-bearing wastes.

The LDR also prohibit the dilution of restricted hazardous wastes and residuals where dilution facilitates compliance with or avoidance of LDR treatment standards. Several forms of metals reclamation involve the addition of materials (i.e., reagents) to the metal-bearing waste as part of the recovery process. This could be construed as impermissible dilution if the practice serves only as a substitute for adequate treatment or allows the waste to avoid the applicable treatment standard. Where this is the case, the reclamation process would either have to be altered or abandoned.

4.2 Derived-From Rule

The derived-from rule[26] provides that a solid waste (e.g., sludge, spill residue, ash, emission control dust, or leachate) generated from the treatment, storage, or disposal of a hazardous waste remains a hazardous waste unless it is delisted, or, where the waste is hazardous solely because it exhibits a hazardous characteristic, the residual waste no longer exhibits a hazardous characteristic. The rule also provides that materials that are reclaimed from solid waste and then used beneficially are not solid or hazardous wastes unless burned for energy or used in manner constituting disposal, i.e., products of reclamation are not regulated unless the product is burned or placed on the land.

In addition, an amendment to the derived-from rule[27] conditionally exempts non-wastewater residues, such as slag, resulting from high temperature metals recovery (HTMR) processing of the listed hazardous wastes K061, K062 and F006 conducted in specified reclamation units,[28] provided the residue meets specified exclusion levels, does not exhibit any hazardous characteristics, and is disposed in Subtitle D units (e.g., non-hazardous landfill).

The effect of the derived-from rule is that where metals are being reclaimed from listed metal-bearing hazardous wastes, the recovered metals are not hazardous wastes when used beneficially (and not burned or applied to the ground). In addition, slag generated from high temperature metals recovery (HTMR) processing of K061, K062 or F006 is also not regulated as a hazardous waste provided it meets the conditions noted above. However, slag that does not meet the generic delisting HTMR exemption retains its identity as a listed hazardous waste subject to full RCRA regulation (including LDR requirements). Where metals are recovered from characteristic hazardous wastes, the slag is **fully** regulated under Subtitle C if it exhibits a hazardous characteristic (otherwise it is not regulated). Additionally, slag resulting from reclamation of a metal-bearing hazardous waste remains subject to LDR requirements even if the slag does not exhibit a hazardous characteristic at the point of disposal.[29] Thus, the products derived from metals reclamation are not generally regulated whereas the residuals, with specified exceptions, often are.

4.3 Interim Status & Permitting

Under Subtitle C of RCRA, owners/operators of facilities that treat, store, or dispose of hazardous waste (TSDFs) are subject to standards and permitting requirements under Sections 3004 and 3005 of RCRA (promulgated as regulatory requirements under 40 CFR Parts 264 and 270). Qualified facilities may operate under interim status standards without a permit (40 CFR Part 265) pending an Agency decision on the permit application. All interim status facilities must submit a Part A application which includes general facility information such as name, address, types of hazardous wastes managed and processes conducted. A Part A application is required for TSDFs operating under interim status.

In addition to a Part A application, permit applicants are also required to submit a Part B permit application which contains more extensive information regarding the facility. Although there is no standard Part B application form, the application itself must address relevant TSDF standards including standards for the specific type of facility/unit such as a landfill or incinerator.

Part B applications usually address comprehensive information requirements such as waste analysis plans, closure and post-closure plans, financial assurances, contingency plans. Additional information provided in a Part B application includes groundwater monitoring data, specific information for the type of unit on-site (e.g., waste pile), and information on solid waste management units (SWMUs) on-site. The issuance of a RCRA Part B permit triggers facility-wide corrective action requirements, which are discussed in detail in section 4.5 below, and financial assurance standards.

Under RCRA Subtitle C recycling processes are generally not subject to permitting requirements (40 CFR §261.6(c)(1)). In contrast, storage of hazardous wastes prior to reclamation is subject to permit requirements (40 CFR §261.6(c)(1). Since metals reclamation is considered a form of recycling,[30] reclamation processes are among those that until recently have not had to obtain a RCRA permit.

The recently promulgated Burner and Industrial Furnace (BIF) rule, discussed in section 4.4 below, does generally require permits for smelting operations that are not burning solely for metal recovery (i.e. are burning for energy recovery or burning for destruction as well). However, the BIF rule provides a conditional exemption from this permitting requirement such that the reclamation process in a metals recovery operation may not have to operate subject to a RCRA permit (see discussion of BIF rule, below).

Generators storing hazardous metal-bearing waste on-site must have interim status or obtain a Subtitle C permit if they store the waste for longer than 90 days or if they store in a unit that is not a tank, container, or containment building, such as a surface impoundment or waste pile (40 CFR §262.34) (Please note that storage in waste piles or surface impoundments is prohibited unless the wastes meet LDR treatment standards). New off-site facilities must obtain their storage permit prior to commencing construction, and existing facilities must comply with interim status requirements prior to obtaining their final (i.e., Part B) permit.

4.4 Financial Assurance

Under the current RCRA Subtitle C regulations (40 CFR §264/265, Subparts F and H), hazardous waste treatment, storage, and disposal facilities (TSDFs) are subject to financial assurance requirements with respect to closure, post-closure, and corrective action activities. These requirements ensure that facilities have the ability to finance proper closure, post-closure care, and corrective action.

Both interim status and permitted storage facilities must meet financial assurance requirements for closure and post-closure care (note post-closure is required only if the facility has disposal units).[31] Essentially, facilities are required to develop and annually update detailed written cost estimates for closure and post-closure care and to establish financial assurance in the form of a trust fund, letter of credit, insurance, financial test and corporate guarantee, or surety bond guaranteeing performance or being paid into a trust fund. In addition, facilities must carry liability coverage, with coverage minimums of one million dollars per occurrence and two million dollars aggregate, annually, exclusive of legal defense costs.

The closure cost estimate must be based on third-party costs and must approximate final closure costs at the point during the facility's active life when closure would be most expensive. The post-closure cost estimate must be in current dollars and must be based on the current annual costs required for post-closure care maintenance, which are then multiplied by the post-closure care period. Both the closure and post-closure cost estimates must be revised annually to account for inflation.

Corrective action financial assurance is also required for any TSDF operating under interim status that contains a solid waste management unit and is applying for a RCRA hazardous waste permit. Where corrective action cannot be completed prior to applying for the permit, the permit must include assurances of financial responsibility for completing any corrective action needed due to prior or continuing releases. These assurances of financial responsibility must address on-site releases as well as releases that have migrated beyond the facility boundary.

4.5 Corrective Action

Any RCRA facility seeking an operating (e.g., storage) or post-closure permit must comply with corrective action requirements imposed under §3004(u) and (v) of RCRA. Under these requirements, facilities must address, on a facility-wide basis, all past releases of hazardous waste or hazardous constituents from solid waste management units (SWMUs). SWMUs are defined to include any discernable waste management unit at a RCRA facility from which hazardous waste or hazardous constituents might migrate, irrespective of whether the unit was intended for the management of solid or hazardous waste.

EPA retains authority under several other sections of RCRA to require either corrective action or remedies for hazardous waste releases. First, when there has been a release of hazardous waste into the environment from an interim status facility, EPA is authorized under §3008(h) of RCRA to issue an order requiring corrective action necessary to protect human health and the environment. Second, when there is evidence of imminent and substantial endangerment to health or the environment resulting from improper management of hazardous waste, the Agency is authorized under §7003 of RCRA to file suit in the appropriate U.S. district court to prevent or remedy the problem. Finally, under its omnibus authority, §3005(c)(3), EPA is authorized to include terms and conditions as necessary to protect human health and the environment.

Solid waste management units managing hazardous waste, as well as those managing non-hazardous waste, must be cleaned up as part of obtaining a RCRA permit. This means that a reclamation facility seeking a storage permit must conduct facility-wide corrective action for all solid waste management units before the permit may be issued or the permit must contain a schedule of compliance to conduct corrective action at the facility after permit issuance. Additionally, corrective action may encompass cleanup beyond the facility boundary in circumstances where the contamination has resulted from the migration of on-site releases beyond the facility boundary.

4.6 Boiler and Industrial Furnace Rule

Under EPA's Boiler and Industrial Furnace (BIF) rule,[32] smelting, melting and refining furnaces are regulated as industrial furnaces. However, these furnaces are conditionally exempt from regulation under the BIF rule provided that they process hazardous waste solely for metal recovery, and if the facilities meet the following requirements. First, to be exempt from requirements imposed under 40 CFR §266.102 (Permit Standards for Burners) and §266.111 (Standards for Direct Transfer), smelting furnaces must:

- provide a one-time notice to the Director indicating: the claim of exemption, that the waste is being burned for metals recovery and is not being burned for destruction or as a fuel (as defined in §266.100(c)(2)), that the waste contains recoverable levels of metals, and that the owner will comply with applicable sampling, analysis, and recordkeeping requirements;

- sample and analyze the waste and feedstocks as necessary to comply with 266.100(c) using accepted EPA analytical methods (SW-846); and

- maintain records documenting compliance for three years, including records of toxic organic constituents, Btu value, and levels of recoverable metals.

Second, hazardous waste meeting either of the following criteria are not considered to be burned solely for metals recovery and thus are fully regulated under the BIF rule:

- waste with a total concentration of Appendix VIII organic compounds exceeding 500 ppm by weight (as generated -- such wastes are considered to be burned for destruction);

- waste with a heating value of 5000 Btu/lbs. or more (as fired -- such wastes are considered to be burned as fuel).

In addition, despite the conditional exemption discussed above, smelting furnaces processing hazardous waste for metals recovery remain subject to the requirements established under 40 CFR §§266.101 (Management Prior to Burning), and 266.112 (Regulation of Residues). Under §266.101, generators and transporters are subject to 40 CFR §§262 and 263, respectively, and storage facilities are subject to the applicable provisions of Subparts A-L (General TSD standards and technical storage standards) of 40 CFR Parts 264, 265, and 270.[33] Section 266.112 provides that residues from furnaces processing hazardous waste are not exempt from the definition of a hazardous waste under §§261.4(b)(4), (7) and (8), (exemptions for special wastes) unless the device meets specific criteria[34] and the hazardous waste does not significantly affect the residue.

Thus, the BIF rule restricts the waste that can be reclaimed and imposes administrative provisions upon the reclamation process itself.

4.7 Hazardous Waste Manifesting And Transportation

Generators of metal-bearing hazardous wastes are generally subject to manifesting requirements (40 CFR Parts 262 Subpart B). Generators of spent lead-acid batteries destined for reclamation or scrap metal destined for recycling are not subject to these requirements. Generators who are subject to manifest requirements may not have their wastes shipped by transporters who have not received an EPA hazardous waste identification number (40 CFR §262.12).

Transporters of hazardous waste are subject to transportation standards in 40 CFR Part 263. These requirements include obtaining an EPA identification number (40 CFR 263.11), compliance with manifesting requirements (ensuring delivery to designated facility) (40 CFR §§263.20 and 21) and appropriate recordkeeping and reporting requirements.

Both the generator and the transporter are subject to Department of Transportation requirements promulgated under the authority of the Hazardous Materials Transportation Act (HTMA). For generators these requirements include identifying and classifying waste according to DOT's Hazardous Materials table (49 CFR §172.101), compliance with packaging, marking and labeling requirements (49 CFR Parts 172 and 173), determination if additional shipping requirements are appropriate (49 CFR 49 CFR Parts 174 to 177 and providing appropriate placards to the transporter (49 CFR §172.506). Transporters are required to follow applicable DOT regulations listed in 49 CFR Parts 171-179.

Finally, hazardous waste shipped under the manifest are subject to EPA's waste export regulations found at 40 CFR Part 262 Subpart E. The export regulations require that EPA and the State Department provide written notice to a country prior to the export of the waste. The export may proceed only after the receiving country consents to the shipment.

4.8 Summary

Table 4-2, below, summarizes the key regulatory requirements applicable to metals reclamation operations. As is apparent, metals reclamation is subject to a variety of requirements under RCRA. These requirements affect most aspects of the process. Key requirements include those addressing permits, the management of residual wastes such as slag, and the BIF rule. There is general agreement that the requirements discussed here are the ones with the greatest impacts on metal recovery.

As discussed above, Subtitle C permits may be required for storage of hazardous waste prior to reclamation or for the reclamation process itself under industrial furnace standards. These permit requirements are significant because facilities must expend significant time and resources to achieve compliance. In addition, permitted units become subject to corrective action and financial assurance requirements, each of which imposes additional significant costs upon the permitted operation. However, some smelters have configured their operations such that hazardous waste is fed directly into the process such that no storage permit is required.

Similarly, the management of residual slag is important largely because of the costs and potential liability associated with proper treatment and disposal. Such treatment and disposal includes compliance with applicable LDR requirements. However, some primary smelters that process hazardous waste generate slags are that are exempt from regulation as "Bevill Wastes"[35] so long as the character of the slag has not changed as a result of the hazardous waste used as a feedstock. Finally, the BIF provisions are key requirements because they may affect metal recovery operations that do not qualify for the exemption for burning solely for metal recovery.

Table 4-2. Key RCRA Provisions Applicable to Metals Reclamation

On-Site Metals Reclamation	
Metal-Bearing Hazardous Waste Generator	• LDR notice and certification
Storage	• 90-Day storage allowed without permit • Permit required after 90 days (corrective action/financial assurance) • LDR allows for legitimate accumulation and restricts storage to tanks, containers, drip pads, accumulation units. • Storage standards (40 CFR Parts 264, 265)
Reclamation	• BIF waste restrictions and notice, sampling, and recordkeeping requirements
Off-Site Metals Reclamation	
Transportation	• Manifest required • DOT HTMA requirements • Reporting and recordkeeping requirements • Export requirements
Storage	• Permit required • Corrective action/Financial assurance • LDR requires legitimate accumulation and restricts storage to tanks, containers, containment buildings and drip pads • Storage standards (40 CFR Parts 264, 265)
Reclamation	• BIF waste restrictions and notice, sampling, and recordkeeping requirements (BIF permit if not conditionally exempt)
Reclaimed Product	• Exempt from regulation where not burned or applied to ground
Reclamation Residual	• K061 Conditional exemption • Derived-from hazardous waste • LDR treatment standards & certification

Chapter 5 Assessment of Impacts of RCRA Subtitle C Regulation on Metal Recovery From Hazardous Waste In The United States

This chapter summarizes relevant information on RCRA Subtitle C incentives and disincentives to metal recovery. Chapter 6 will then present firm-specific case studies of how RCRA has affected metal recovery operations favorably or unfavorably. To better understand how RCRA Subtitle C regulation affects metal recovery in the United States, EPA has consulted a variety of sources of information and data. Chief among these are Bureau of Mines Commodity Summaries, economic analyses of RCRA regulations on hazardous waste recycling, trade association information, and trend data on hazardous waste recycling rates and landfill tipping fees.

Through discussions with the regulated community as well as economic analysis, EPA has identified a series of direct RCRA regulatory provisions that appear to have affected metal recovery of hazardous waste in the United States. The main provisions are those that were outlined in Chapter 4 including the derived-from rule, facility-wide corrective action, permit requirements, and financial assurance. This chapter will try to evaluate the way in which these factors impact metal recovery. However, the reader should note that these provisions perform an important role in assuring the environmentally sound management of hazardous wastes in the United States. Thus, the actual or potential disincentives these provisions may have on metal recovery must be evaluated against the environmental and other benefits the provisions provide. For example, RCRA permitting is routinely criticized for delays and expenses in recovering metals from hazardous wastes. Examination of the permit process may identify improvements. However, public participation and agency oversight are two major benefits to the public provided by the permitting process. And while other means of assuring public participation and agency oversight exist, these alternatives must be evaluated against permitting to optimize RCRA's dual goals of environmental protection and resource conservation.

It is also important to recognize that different types of metal-bearing hazardous wastes each have their own physical and chemical characteristics that may pose different risks and offer different opportunities for recovery. Because of this flexible policies are necessary to take advantage of these opportunities for recovery without resulting in an increased risk of release of hazardous metal constituents to the environment.

To understand the regulatory impacts of RCRA on metal recovery operations, it is also necessary to assess indirect regulatory and non-regulatory factors that may either facilitate or limit metal recovery of hazardous wastes. These factors include the technical and economic feasibility of recovering wastes, the costs of alternative management for metal-bearing hazardous wastes such as stabilization and landfilling, and the world demand for metals and metal products. These factors may independently affect decisions by metal recovery operations to pursue new markets for metal-bearing hazardous wastes or make new investments in additional metal recovery capacity.

As mentioned in Chapter 1, only a portion of metal-bearing hazardous wastes are amenable to metal recovery. Certain metal-bearing hazardous wastes may not be amenable to recovery because of a variety of technical or economic reasons: 1) the wastes do not contain recoverable levels of metals, 2) the wastes are too contaminated to be processed for end uses, 3) the wastes contain contaminants that might damage metal recovery operations, 4) there is no known technology for recovering metals from the wastes. Industry estimates are available on a portion of quantities of metal-bearing hazardous waste that are amenable to metal recovery. This information is summarized below in Section 5.1.1.5 (Metal Recovery Coalition). However, the lack of a comprehensive estimate on the total amount of metal-bearing hazardous waste that is amenable to metal recovery limits EPA's ability to evaluate how RCRA is affecting metal recovery and how environmentally sound metal recovery can be encouraged.

In addition to the amenability of waste metals to recovery, the cost of hazardous waste treatment and disposal as an alternative form of management to metal recovery is an important factor in how much metal recovery of hazardous waste occurs in the United States. Hazardous waste treatment and disposal costs are regulatory factors (e.g., treatment and disposal cost avoided) which may indirectly affect metal recovery by raising the cost of substitute management. The costs of hazardous waste treatment and disposal are important determinants of how much a metal recovery operation may charge its customers in user fees and still remain competitive. As treatment and disposal costs increase due either to decreasing capacity or increased demand for these services, metal recovery will become more cost effective as a management alternative. Trends in treatment and disposal costs are summarized below in Section 5.2.1.

If treatment and landfill prices are important factors of setting metal recovery user fees, world demand for metal commodities and products are important indicators of revenue metal recovery operations may derive from the sale of recovered metal products. Markets for primary metals influence prices paid for secondary and scrap metal. A review of trends for major metal commodities is summarized later in this chapter.

5.1 RCRA Regulatory Incentives and Disincentives To Metal Recovery Of Hazardous Wastes In The United States

This section summarizes information on the type and extent of RCRA regulatory incentives and disincentives to metal recovery of hazardous waste in the United States. To collect and evaluate this information, EPA utilized two sources of information: trade association information and economic analysis for recycling completed for EPA during RCRA Reauthorization hearings in 1991.

EPA requested information from 5 trade associations representing generators and reclaimers of metal-bearing hazardous waste. EPA solicited information on the type and quantities of wastes generated or recovered by trade association members, how these materials were managed, how RCRA regulations affected metal recovery of these materials, and what various approaches might do to encourage or discourage metal recovery. The information provided is summarized below.

EPA also reviewed an economic analysis completed for the Agency in 1991 on how treatment and disposal costs in RCRA compared with recycling costs for selected metal-bearing hazardous wastes.[36] This analysis compared three scenarios: current treatment and disposal costs, current recycling costs, and recycling costs under RCRA with regulatory modifications that mitigate compliance costs associated with recycling. The conclusions of this analysis are summarized below in section 5.1.2.

5.1.1 Trade Association Perspectives

As mentioned in Chapter 2, EPA has focused on metal-bearing hazardous wastes that are currently subject to full Subtitle C regulation. These include steel and electroplating listed metal-bearing hazardous wastes and spent materials that are solid wastes when reclaimed such as spent lead acid batteries.[37]

EPA solicited information from five trade associations representing metal recovery operations and generators of metal-bearing hazardous waste. These include the Steel Manufacturers Association/Specialty Steel Industry of the United States (SMA/SSIUS), the American Iron and Steel Institute (AISI), the National Association of Metal Finishers (NAMF), the Association of Battery Recyclers (ABR), and the Metal Recovery Coalition (MRC). These trade association responses have provided the Agency with a broad set of perspectives about how RCRA has affected metal recovery of hazardous waste in the U.S.. A summary of these responses follows.

5.1.1.1. Steel Manufacturers Association/Specialty Steel Industry of the United States (SMA/SSIUS)

SMA is a trade association representing the carbon steel industry in the United States. SSIUS represents specialty steel (e.g., stainless steel) manufacturers in the United States. Together their membership includes 64 firms in the U.S.. There are an additional 7 SMA members located in Canada and three in Mexico. Most members of these two trade associations operate electric arc furnaces that use scrap metal as a major portion of their feedstock.

The main hazardous waste streams generated by SMA/SSIUS members are K061, electric arc furnace dust, and K062, spent pickle liquor from steel finishing operations. SMA/SSIUS state in their response that metallic wastes containing chromium, nickel, lead, cadmium and zinc generated by their industry are amenable for recovery if the economics were favorable. Most K062 generated is not amenable for metal recovery because it does not contain recoverable levels of nickel and chromium.

SMA/SSIUS indicate that the greatest RCRA regulatory disincentives to metal recovery of hazardous wastes generated in their industry include the "derived-from" rule, hazardous waste transportation cost (and the lack of adequate metal recovery facilities in the United States), potential Superfund liability, and the cost of metal recovery compared with other management options.

SMA/SSIUS state that the derived-from rule has discouraged investment in on- site or regional recycling operations because of the additional cost of residual management. SMA/SSIUS also report that hazardous waste transportation cost is also a regulatory disincentive to metal recovery of steel wastes. SMA/SSIUS report that member companies spend an average of $650,000 annually in transportation costs to ship K061 off site for reclamation. The average steel company spends a total of $1.4 million annually to recycle its K061. SMA/SSIUS believes these costs are the result of the lack of adequate metal recovery capacity in the United States.

SMA/SSIUS state that potential Superfund liability from metal recovery operations is a serious disincentive to metal recovery from hazardous wastes. Their response states that metal recovery is problematic because metal recovery involves a number of byproducts and intermediate materials which must be managed off-site from the recovery facility. In a traditional treatment and land disposal management scenario, the entire mass of the waste is treated and managed in one location. This difference between metal recovery and land disposal, SMA/SSIUS argue, may raise the risk that generators will become potentially responsible parties (PRPs) at Superfund sites. They add that metal recovery sites may be at greater risk for being designated as Superfund sites due to prior contamination from pre-existing facilities.

In terms of state regulation, SMA/SSIUS claims that Pennsylvania state regulations on recycling hazardous waste are a disincentive to metal recovery. The State's "PK-4" regulations, adopted in 1992, may require permits for metal recovery operations (such operations are subject to storage permit requirements currently under Federal law, generally the reclamation process itself is exempt from regulation). They add that the State's interpretation of the scope of hazardous waste regulation over intermediate materials is, in their view, overly conservative and that inhibits recycling.

According to SMA/SSIUS, the opportunity cost to society for environmental regulation of hazardous waste in the steel industry is less capital available for R&D, higher steel prices, a less competitive industry in the world market and a trend toward increased landfilling and disposal for hazardous wastes. SMA/SSIUS recommend setting alternative regulatory standards for hazardous wastes managed for metal recovery that would include:

1. Elimination of the "derived-from" rule.

2. Retention of the following exemptions from RCRA requirements: for characteristic sludges and by-products being reclaimed; secondary materials used or reused as ingredients in production processes, effective substitutes for commercial products or returned to the original process without being reclaimed.

3. Substitution of self-implementing management standards for "hazardous reclaimable/recyclable material" (a term to replace "hazardous waste" if the materials are recycled") for permit requirements. These standards would include contingency planning, personnel training, release response, off site shipment standards, storage prior to recovery, notification, recordkeeping, general facility standards, unit-specific corrective action and financial assurance, and conditional exemption from the "derived-from" rule for process residuals.

4. Streamlined reporting, recordkeeping and transportation requirements, federal guidance on the distinction between wastes and products, and treatment and storage.

5. The establishment of incentives (such as tax exemptions, or low interest loans) for research and development to facilitate development of new metal recovery operations in the United States.

In response to Agency solicitation of various approaches to encourage environmentally sound metal recovery, SMA/SSIUS favor conditional exclusions or variances from the definition of solid waste at the point of insertion of the hazardous waste into a recovery process. SMA/SSIUS favor this approach over a conditional exclusion at the point of generation of the waste because they felt that implementation of an exclusion from the point of generation would be problematic. The latter approach would, SMA/SSIUS feel, compel EPA to narrowly interpret the exclusion and possibly subject generators to liability if secondary materials are not managed to meet the terms of the exclusion after they leave the generator's custody.

SMA/SSIUS generally favored streamlined reporting, recordkeeping and transportation requirements, Federal guidance on the distinction between wastes and products, and treatment and storage. SMA/SSIUS also favored the establishment of a national research and development program to facilitate development of new metal recovery operations in the United States.

5.1.1.2. American Iron and Steel Institute

AISI represents 33 domestic steel companies located in 25 states. Its members include 25 integrated steel companies, 2 iron ore producers and a number of electric arc furnace producers. The main metal-bearing hazardous wastes generated by AISI membership are K062, spent pickle liquor from steel finishing operations, K061, electric arc furnace dust; and F006, wastewater treatment sludge from electroplating operations. AISI stated in their response that the hazardous wastes generated with the greatest potential for recovery include K062 for iron recovery, D008 (characteristic lead waste) for lead recovery, and F006 for chromium recovery.

The greatest RCRA regulatory impediments to metal recovery identified by AISI members are RCRA permits, the "derived-from" rule, and corrective action/financial assurance. Other RCRA impediments stated include hazardous waste shipping costs and the 90-day storage limit for generators. One AISI company indicates that the derived-from rule has necessitated the disposal of scale (iron oxides formed on the surface of steel) generated by pickling as a hazardous waste (K062). The respondent states that this material could be used as a raw material in an electric arc furnace but that the derived-from rule and EPA rulings that screening, draining or separating scale constitutes treatment leads to the disposal of the material.

AISI believes that RCRA permitting requirements discourage metal recovery because of the time and resources required to complete the process as well as the permit linkage between permitting and facility-wide corrective action and financial assurance.

Some AISI companies note that metal recovery is problematic because of the lack of availability of metal recovery operations in the United States. The lack of metal recovery operations that are geographically proximate to the steel operations necessitates long off-site shipments which are expensive, given hazardous waste hauler fees. For some firms, this can make disposal in local hazardous waste facilities cost-effective.

In discussions with EPA, one AISI member company, National Steel Corporation/Great Lakes Division indicated that RCRA Subtitle C regulations were a major contributing factor to the closure of its Detroit facility.[38] In 1987 and 1988, the National Steel facility in Detroit generated about 12,000 tons of K061 emission control dust per year. The material was disposed of without treatment in a Subtitle C landfill about 45 miles from Detroit. When treatment standards for K061 went into effect in 1988, treatment and disposal costs for K061 increased the facility's operating cost substantially. The firm examined alternatives to land disposal including metal recovery in Pennsylvania. However, National Steel considered hazardous waste shipping costs associated with this option prohibitive.[39] In part due to increased disposal cost and in part due to rising scrap metal costs (a feedstock of electric arc furnaces), National Steel made a decision to close the facility. Approximately 500 jobs were lost due to the closure. The facility is currently idle and on the market.

AISI states that a fraction of its member companies pay an average of $2.7 million in RCRA Subtitle C compliance costs annually. They believe that this results in missed opportunities for investment in capital projects and job creation that would permit the U.S. steel industry to operate more competitively.

Like SMA/SSIUS, AISI has identified Pennsylvania PK-4 regulations as state disincentives to metal recovery. AISI also identified Michigan's categorization of zinc as a toxic characteristic waste as a disincentive to metal recovery.

When EPA asked the Institute to respond to alternative proposals to full RCRA Subtitle C regulation, AISI indicated a preference for a conditional exclusion from the definition of solid waste at the point of generation. In contrast to SMA/SSIUS, AISI prefers this exclusion at the point of generation rather than at the point of insertion to a metal recovery process.

To ensure environmentally sound recycling, AISI proposes that the generator and recovery operation submit a management plan to EPA with a process description and safeguards to demonstrate environmental protectiveness. AISI supports minimal management standards to apply to each plan that would include:

1. Retention of a limit on speculative accumulation.

2. No placement on the land for secondary materials.

3. Air installation and operating permits.

4. National Pollution Discharge Elimination System Permits (for water releases).

5. Recordkeeping and reporting requirements.

In response to other alternative approaches mentioned by EPA, AISI favors streamlining of recordkeeping, reporting and transportation requirements. AISI specifically commented that all Department of Transportation licensed haulers (or state equivalent) should be allowed to transport metal-bearing secondary materials to a metal recovery facility. The Institute favors class or generic delistings for process residuals provided an appropriate measure of hazard can be developed (AISI feels that the Toxicity Characteristic Leaching Procedure that EPA currently uses is too conservative).

Other AISI comments to encourage metal recovery of hazardous waste include: 1) creating a separate Subtitle under RCRA for metal-bearing secondary materials being reclaimed, 2) separating RCRA permitting requirements from financial assurance and facility-wide corrective action requirements, and 3) simplifying regulatory requirements for innovative technologies for metal recovery and reuse.

5.1.1.3 National Association of Metal Finishers

The National Association of Metal Finishers (NAMF) represents 699 members in 40 states. NAMF estimates that there are 3300 metal finishing operations nationwide. In contrast to steel operations, metal finishing operations are smaller in size and more numerous. The main metal-bearing hazardous waste generated by NAMF members is F006, wastewater treatment sludges from electroplating operations. This is a listed hazardous waste often containing recoverable levels of copper, nickel, chromium, zinc, lead and cadmium. NAMF members also generate F007, spent cyanide plating bath solutions from electroplating operations, as well as characteristic lead and cadmium wastes.

NAMF reports that F006 is the waste stream generated by its membership with the greatest potential for recovery. It estimates that currently about 15 to 20 percent of F006 is recovered annually. As with other metal-bearing hazardous wastes, NAMF reports that members make decisions about managing for disposal or recovery based upon two factors: cost differences between disposal and recovery and the liability risk for disposal versus recovery.

NAMF believes that metal recovery capacity in the United States is constrained by high operating costs attributable to RCRA regulation. Because of high hazardous waste shipping costs, geographic proximity to metal recovery or disposal facilities may be a major factor in cost comparisons also. NAMF reports that member companies currently spend on average approximately $36,000 annually in shipping and disposal costs.

Overall, NAMF believes that the greatest RCRA disincentives to metal recovery are the derived-from rule, the 90-day storage limit for generators, and application of Land Disposal Restriction treatment standards to plating wastes. NAMF believes that the derived-from rule constrains the creation of additional metal recovery capacity in the United States and adds to the expense of existing capacity.

The 90-day storage limit for generators states that generators have 90 days to store hazardous wastes in tanks, containers or containment buildings without a permit (40 CFR §262.34). This is to provide generators with sufficient time to accumulate sufficient quantities of materials to ship off-site. NAMF states that this time period is simply not sufficient for its members to accumulate sufficient waste to make it cost-effective to ship for reclamation. When disposal facilities are closer than metal recovery operations to member companies, metal finishers may select disposal over recovery to take advantage of reduced shipping costs. NAMF believes that longer accumulation times at generator sites would facilitate selection of recovery as an option since the per ton cost of shipment would drop with larger quantities.

The third major RCRA regulatory disincentive to metal recovery stated by NAMF is the application of the Land Disposal Restriction treatment standards for F006. These standards for F006 non-wastewaters specify a concentration level of waste extract for cadmium, chromium, lead, nickel and silver. The treatment levels are based on stabilization. NAMF believes that these treatment standards add substantial volume to the waste leading to depletion of hazardous waste land disposal capacity. The Association also believes that this has the effect of discouraging pollution prevention because of the expanded volume of the waste as well as diverting scarce capital at the site to invest in source reduction alternatives.

In terms of different approaches to encouraging metal recovery in RCRA, NAMF favors establishing a new Subtitle under RCRA for recovered secondary materials. It also favors a conditional exclusion from the definition of solid waste at the point of generation. The Association favors conditions limited to a one-time notification and an extended storage limit on-site.

5.1.1.4 Association of Battery Recyclers/RSR Corporation

To evaluate the effect of RCRA Subtitle C regulation on the spent lead-acid batteries (SLABs), EPA requested information from the Association of Battery Recyclers (ABR). RSR Corporation, a secondary lead smelter that is not a member of ABR, also submitted a response to the Agency. Their responses are summarized below. This information will be compared with other data on SLAB recovery that EPA has analyzed later in this chapter.

ABR is a trade association composed of member companies that reclaim lead and plastic from SLABs and other lead-bearing materials. ABR represents 9 member companies operating 14 facilities in 10 states. According to its response, ABR members recycle about 80 million batteries annually. ABR states that lead paint remediation wastes are the metal-bearing secondary materials with the greatest potential for recovery that are not being recovered now. ABR believes that in order to recover these materials that their supply would have to be ensured through regulation leading to their mandated removal or remediation.

When asked about which RCRA Subtitle C regulatory provisions were the greatest impediments to metal recovery, ABR states that the Land Disposal Restrictions (LDR) requirements, state determinations regarding the status of partially-reclaimed materials and RCRA Part B permitting costs have been the most problematic. According to ABR, LDR requirements either have or will substantially raise member companies operating costs by requiring retrofitting of current storage areas to meeting containment building standards[40] for secondary containment and leak detection. ABR also believes that LDR will substantially increase residual management costs to its members through increased treatment/stabilization costs for characteristic slag. ABR believes that this will also adversely affect the Nation's hazardous waste landfill capacity.

ABR states that a lack of uniformity in state regulatory determinations on the status of partially-reclaimed secondary lead-bearing materials is a major regulatory impediment in lead recovery from hazardous wastes.[41] According to ABR, differing state regulatory interpretations on whether or not lead-bearing secondary materials are or are not solid wastes (and hazardous wastes) discourage environmentally sound metal recovery by confusing and frustrating generators of lead-bearing secondary materials frequently leading them to select alternatives to metal recovery (e.g., export for recovery, disposal or treatment).

ABR believes that Part B permit compliance costs also represent a serious impediment to battery recovery. The time and transaction costs associated with obtaining the permit limit the amount of revenue available for secondary smelters to invest in new capacity or technological innovation. ABR estimates that member companies have expended on average $900,000 to $1 million per facility to prepare and obtain a RCRA Part B permit. Labor costs to administer the permit are estimated at $400,000 to $700,000 per permit. Finally, capital investments associated with retrofit and/or new construction of containment buildings are estimated between $750,000 to over $1 million per facility. ABR estimates that total RCRA compliance costs since 1989 at $6 million per facility for some ABR members. EPA has not verified these estimates.

In addition to LDR, uncertain state regulatory determinations regarding partially-reclaimed materials, and Part B permit requirements, ABR identified a number of other Federal environmental statutes that may impose regulatory disincentives to metal recovery. The most significant of these is Superfund. ABR notes the time and expense invested by generators and owner/operators of secondary smelters to minimize the risk of Superfund liability. ABR describes on-site audits of recovery facilities and protracted negotiations between generators and recovery facilities, as well as lending institutions concerns about lender liability. Other Federal environmental statutory programs that ABR mentioned as potentially impeding increased recycling include:

- potential more stringent pretreatment requirements for metals following Clean Water Act Reauthorization,

- hazardous air pollutant (HAP) testing and associated uncertain compliance costs with Clean Air Act implementation,

- potential changes to Safe Drinking Water Act (SWDA) standards (ABR is concerned that this might cause EPA to modify the Toxicity Characteristic level for lead which is based in part upon SWDA maximum contaminant levels (MCLs) which could affect their residuals such as slag).

In response to EPA questions about alternative approaches to regulating metal recovery of hazardous waste, ABR generally favors class or generic exclusions for process residuals (e.g., slag). The Association states that some of its members support the concept of case-by-case RCRA facility standards applicable to individual facilities. Other ABR members feel that such self-implementing standards are difficult to administer. ABR believes that Federal guidelines on distinguishing recycling from treatment and/or storage are of little value if states retain authority to promulgate more stringent requirements.

Although not a member of ABR, RSR Corporation is a major recovery firm of SLABs and other lead-bearing materials. RSR requested an opportunity to provide input into this report. RSR operates 3 facilities in 3 states. RSR processes 412,000 tons of SLABs, approximately one out of every three in the United States. RSR also processes 20,000 tons of other lead-bearing materials. The company recovers lead from its process.

RSR believes that uncertainty regarding the regulatory status of partially-reclaimed materials and the derived-from rule are the major regulatory impediments in RCRA to metal recovery. RSR states that designating sulfur and chloride impurities removed from K069, emission control dust from secondary lead smelting, as K069 itself because of the derived-rule will interfere with beneficial lead recovery. The company believes that the K069 designation of these impurities will create an incentive to leave these materials in the K069 that is reinserted into secondary lead smelters.

RSR asserts that this will frustrate pollution prevention because the company believes that substantial quantities (1300 to 2500 tons per year) of sulfur dioxide emissions will not be removed from the environment and the presence of these contaminants will contribute to the premature wear of RSR equipment due to acid damage from the impurities. RSR believes the RCRA Section 3001 exemptions for waste generated by primary smelting facilities are also serious impediments to metal recovery of hazardous waste.

RSR feels that most of the alternative approaches discussed by EPA would do little to encourage additional metal recovery of secondary lead-bearing materials. RSR feels that the definition of solid waste itself fundamentally overregulates secondary materials and that a major structural change in the definition is required. RSR has specifically recommended that EPA modify one of its exclusions to the definition of solid waste at 40 CFR §261.2(e)(iii)[42] to include secondary operations. RSR proposes also that pretreatment, e.g., removal of impurities, should not constitute reclamation.

5.1.1.5 Metals Recovery Coalition

The Metals Recovery Coalition (MRC) is an affinity group of metal recovery firms in the United States. MRC includes 28 firms operating more than 150 facilities in 48 states. MRC was formed in April of 1992 to lobby Congress and EPA for statutory and regulatory reform during RCRA reauthorization. MRC member companies process both hazardous and non-hazardous wastes and secondary metal materials.

Two of the larger companies in the group are involved primarily in recovering emission control dust from electric arc furnaces (K061, a listed hazardous waste) for the steel industry. Other hazardous wastes recovered include electroplating sludge, nickel-cadmium batteries, and K062 spent pickle liquor from steel finishing operations. MRC has identified a series of metal-bearing secondary materials that are amenable to recovery and are not currently being recovered. A partial list of estimated quantities generated includes:

• electroplating sludge	900,000 tons/yr
• surface finishing wastes	500,000 tons/yr
• brass foundry materials	300,000 tons/yr
• ferrous foundries materials	200,000 tons/yr
• galvanizing wastes	50,000 tons/yr
• spent chromium refractories	25,000+ tons/yr
• nickel-cadmium batteries	10,000-20,000 tons/yr
• chromium leather tanning wastes	10,000 tons/yr
• superalloy slags	5,000 tons/yr
• metal catalysts	500-1000 tons/yr
• ni-cd battery product sludges	450 tons/yr
• chromium tailings	60,000 tons/yr

MRC believes that to actually recover these materials several regulatory modifications would be required. MRC believes that recovery of secondary materials is really a manufacturing process rather than a waste management activity. As such, MRC believes that legitimate metal recovery operations should be exempt from RCRA Subtitle C and regulated in a similar manner to "other manufacturing operations".

MRC believes that the derived-from rule, discussions of "sham recycling" and the stigma of hazardous waste designation inhibit recovery of these materials. MRC believes that the derived-from rule discourages the utilization of non-hazardous materials (e.g., slag) for beneficial uses such as construction materials. MRC believes that "sham recycling" (the concept that a facility is conducting treatment and claiming to recycle) is an idea developed by the treatment and disposal industry to retain market share over recyclers.

MRC regards the derived-from rule, Part B treatment permit requirements in some states, and facility-wide corrective action as the three greatest RCRA disincentives to metal recovery. Other disincentives cited include stigma, legitimacy determinations (sham recycling), Part B storage permit requirements and Land Disposal Restriction requirements.

According to MRC, the derived-from rule has the potential to make the economics of metal recovery from hazardous wastes prohibitive. If applied to all metal recovery residues, at an average of $300 to $350 per ton, hazardous waste landfilling costs would translate into millions of dollars of additional operating costs for firms.

In addition to the added operating cost, MRC believes that the derived-from rule acts as disincentive to metal recovery because it results in continuing risk of potential liability under the Comprehensive Environmental Response Compensation and Liability Act (CERCLA) also known as Superfund.[43]

MRC states that Part B treatment permit requirements are serious disincentives to metal recovery. Although the federal RCRA program does not require a permit for the recycling process, treatment permit requirements may be a potential concern in one of two ways. First, the appropriate state regulatory agency may regulate the recycling process more stringently than the Federal government. North Carolina currently requires permits for recycling operations. Pennsylvania has also promulgated regulations that will require treatment permits for metal recovery operations (the PK-4 regulations). The second way that a metal recovery operation may become subject to a Part B treatment permit is if the state or Federal regulatory agency determines that a process is not legitimate. That is, if a recovery operation is believed to be really doing treatment and the recycling is incidental or sham, a treatment permit may be required.

MRC estimates of Part B treatment permit costs are between $250,000 to $800,000 per facility. MRC believes that many of RCRA Subtitle C treatment and storage permit requirements are duplicative of Clean Air Act and Clean Water Act regulations. MRC states that both costs and time delays of obtaining a permit for a new facility are potential problems. Or if new permit requirements are added for existing facilities, this is problematic if space is not available on-site.

MRC states that facility-wide corrective action is the third greatest RCRA regulatory disincentive to metal recovery. MRC believes that facility-wide corrective action may discourage a decision to invest in a new metal recovery facility or to site a facility in an existing manufacturing site. MRC believes that a regulatory disincentive to site a facility in an existing manufacturing site is environmentally unsound (presumably because the damage caused by a release to the environment in a pristine area is greater than in an industrial park). MRC believes that this discourages investment in urban enterprise zones where job creation and expansion of the tax base are needed.

MRC has summarized the opportunity cost to the United States from RCRA regulatory compliance costs as lost metal recovery capacity, lost investment in capital projects and associated job creation in the metal industry. Additional opportunity cost, MRC believes, is the reluctance of metal-bearing hazardous waste generators to support expansion of new metal recovery technologies due to regulatory consequences. MRC believes that generators of electric arc furnace dust, K061, feel that because the technology to recover the dust preceded its listing as a hazardous waste that the technology led to the regulation. MRC believes that generators will be reluctant to support new recovery technologies if they lead to new regulations.

In response to various alternative approaches to managing metal-bearing hazardous wastes, MRC reiterated its basic belief that metal recovery is a manufacturing process rather than a form of waste management. As such, it favors an unconditional exclusion from the definition of solid waste. However, if a conditional exclusion is the selected alternative, MRC proposes minimal notification, recordkeeping and reporting requirements for generators and metal recovery operations. Specific requirements MRC would support include:

- one time notification from generators/reclaimers stating that they are claiming the exclusion,
- notification from generators/reclaimers for speculative accumulation for more than a specified time between generation and shipment or receipt and processing,
- recordkeeping by generators stating quantities of secondary materials generated, time between generation and shipment, destination of shipment of secondary materials; recordkeeping by reclaimers stating quantities and sources of materials received, time period between receipt and processing, quantities of metal or metal equivalent recovered.

MRC believes that this set of conditions would allow EPA to detect sham recycling operations without undue intrusion into secondary metal recovery. MRC would not apply the derived-from rule to metal recovery process residues. With respect to other alternative regulatory approaches, MRC comments that use of self-implementing standards such as permit-by-rule provisions are less helpful than a conditional exclusion from regulation but preferable to full permitting. MRC favors Federal guidelines or rules to delineate between recycling and treatment or recycling and storage.

5.1.1.6 Summary and Analysis of Trade Association Information

In general, trade association's identified the following as the most significant RCRA regulatory impediments to metal recovery: the derived-from rule, RCRA Part B permitting (storage or treatment), facility-wide corrective action, hazardous waste shipping costs, LDR treatment requirements and prohibitions on storage of restricted waste. Additionally, generator respondents commented that the 90 day storage limit for storing hazardous wastes in tanks or containers was not sufficient to encourage metal recovery.

With respect to alternative regulatory approaches for managing metal-bearing secondary materials, respondents generally favor conditional exclusions from the definition of solid waste applying either at the point of the waste's generation or at the point of its insertion into a metal recovery process. Respondents support limited conditions on the exclusion including some form of notification or reporting tied to a quantity and time limit to prohibit long term storage of recoverable materials. Some respondents supported further management standards.

Self-implementing management standards still subject to RCRA regulation are generally regarded as a less desirable alternative to conditional exclusions from regulation, but still preferable to full Part B permitting. Reaction to Federal guidelines distinguishing between recycling and treatment or recycling and storage is mixed. Some respondents feel that such guidance is part of other approaches such as conditional exclusions. Others feel that such guidance is a minor fix to what is a more fundamental problem with the definition of solid waste.

All respondents were reluctant to identify RCRA provisions that they believed were beneficial to environmentally sound metal recovery. However, when asked to compare disposal costs with recovery costs, some respondents acknowledged that increasing disposal and treatment costs due to RCRA have made metal recovery a more attractive alternative. Metal recovery of secondary materials before and after RCRA regulations went into effect will be summarized later in this chapter.

5.1.2 Economic Analysis of RCRA Subtitle C Regulation On Selected Metal-Bearing Hazardous Wastes

In March 1991[44], EPA finalized a study commissioned by the Agency on the economics of recycling and treatment/disposal of hazardous wastes to determine which management alternative was most cost-effective under RCRA Subtitle C. As part of this project, the Agency directed economic analysis on recycling with regulatory modifications to determine whether or not these changes to RCRA Subtitle would provide any additional incentive to recycle hazardous wastes.

The study included 4 metal-bearing hazardous wastes[45]- F006 wastewater treatment sludge from electroplating operations, F007 spent plating baths from electroplating operations, K061 emission control dust from electric arc furnaces in secondary steel production, K062 spent pickle liquor from steel finishing operations- in the analysis. As mentioned above, the study included analysis of three scenarios: base treatment and disposal, recycling under current regulations, recycling with regulatory modifications. For recycling with regulatory modifications, the study analyzed four possible regulatory modifications:

1) permit-by-rule; recyclers are subject to self-implementing management standards without being subject to permits (either for storage or BIF requirements),

2) corrective action waiver; recycling operations will be exempt from corrective action requirements unless they have other units requiring a RCRA permit on-site,

3) derived-from rule exemption; residues from recycling operations would not be deemed hazardous unless the residues themselves are listed or exhibit a toxicity characteristic,

4) storage pile exemption; storage piles prior to recycling are not subject to Land Disposal Restriction standards as long as the EPA Administrator deems the storage area sufficient to prevent releases to the environment.

The purpose of the analysis was to determine whether or not recycling is or could be a cost-effective management alternative for selected hazardous wastes. This summary of the study focuses on four major listed metal-bearing hazardous wastes to ascertain whether or not the RCRA Subtitle C regulations currently provide incentives for metal recovery. This summary also critiques study's conclusions regarding the additional incentives provided by regulatory modifications for selected metal-bearing hazardous wastes.

The study identified several important limitations[46] in its methodology including limited review of recycling technologies selected for the analysis, impacts of non-economic factors on metal recovery (including technical feasibility), and whether or not pollution prevention may be a more cost-effective alternative. In addition, EPA's review during completion of this report of the study indicates several mistaken assumptions of metal recovery processes.[47] Notwithstanding these qualifications, the study provides valuable insight into the issue of how RCRA Subtitle C regulations affect metal recovery of hazardous wastes.

In contrast to the trade association information described above which emphasized the ways that RCRA regulation constrains metal recovery, the study showed that under RCRA Subtitle C regulation that metal recovery is more cost-effective than treatment and disposal for the listed metal-bearing hazardous wastes under review. The analysis also concluded that the recycling with regulatory modifications being proposed would provide additional incentives for metal recovery of hazardous wastes from the steel industry, K061 and K062, but not the electroplating industry, F006 and F007. However, as mentioned below, EPA believes recycling with regulatory modifications may benefit off-site recovery of electroplating wastes.

The study modeled cost comparisons for three facility sizes (small, intermediate, and large) for each of the waste streams selected. Each size facility was assumed to use a specific form of treatment/disposal and metal recovery depending upon the economics of the recovery process. With one exception[48], for the 4 metal-bearing hazardous wastes included in the analysis, metal recovery under current RCRA Subtitle C regulation is more cost-effective than traditional treatment or disposal for all size facilities and processes. This finding also included facilities which had sunk (i.e., invested) capital in base case treatment systems.

The study's examination of regulatory modifications indicates that the modifications considered would benefit steel wastes more than electroplating wastes. The study assumed in its analysis that electroplating operations will manage rinsewaters in tanks that are exempt from permits and that therefore permit and corrective action (which is tied to permits) regulatory modifications will not facilitate metal recovery of plating wastes. The study concluded that these operations will also either not produce a residual or the residual will be characteristically toxic so that in either case an exemption from the derived-from rule will not make metal recovery more cost effective. Finally, since plating rinsewaters are not stored in piles, the storage waste pile exemption would not facilitate metal recovery of these wastes.

By contrast, the study concluded that metal recovery for K062, spent pickle liquor from steel finishing operations, would be encouraged by either permit-by-rule or corrective action exemptions. The study concluded that a derived-from rule exemption would not facilitate K062 recovery because the recycling residuals would still exhibit the toxicity characteristic. The study concludes that metal recovery of K061 would benefit from any of the regulatory modifications. The study's analysis regarding the benefit of possible regulatory modifications requires some clarification. The study's conclusions about the limited benefits of regulatory modifications for electroplating wastes are based on an assumption that these wastes would be managed using on-site recovery processes. If plating wastes are shipped off-site for recovery and prior storage is required, the regulatory modifications could provide substantial benefit as the study has concluded they would for off-site recovery of K061, electric arc furnace dust. In addition, any pyrometallurgical recovery of plating wastes is likely to produce a residual such as slag. This type of recovery would benefit from a derived-from rule exemption provided the slag is not characteristically toxic.

In evaluating the potential cost savings relative to total management costs from four regulatory modifications, the study concluded that generally changes to permitting requirements and a derived-from rule exemption would <u>not</u> be sufficient to change the relative economics of treatment and disposal in favor of recycling if treatment and disposal were more cost-effective to begin with.[49] The study also concluded that small facilities would benefit more relative to large facilities from such modifications.

In contrast, the study concluded that a corrective action exemption would provide a strong incentive for recycling particularly for small facilities. The storage waste pile exemption was determined to be beneficial for affected wastes but of limited applicability since many wastes are not managed in piles.

On important question raised by the study's main conclusion is if metal recovery is more cost-effective than treatment and disposal under RCRA currently, why aren't recovery rates for wastes such as F006 higher than 15 to 20 percent?[50] There are several possible responses to this question.

First, it is possible that only a small portion of a particular metal-bearing waste stream is technically amenable for recovery. In the case of F006, a large portion of the wastestream may contain too much organic content such as oil and grease to be effectively recovered. If this is the case, then the recovery rate of F006 that is technically amenable for recovery could be much greater than the recovery rate for all F006 that is generated. A second possibility is that metal recovery operations are less commercially available relative to treatment and disposal facilities. If so, then additional shipping costs for distant metal recovery could offset the cost advantages of metal recovery. Finally, the study suggests that noneconomic factors may influence waste management decisions:

> "This high cost of base case treatment/disposal to meet the newly promulgated land disposal restrictions standards provides an incentive for waste generators to find other methods of waste management. Given the fact that recycling under current regulatory conditions is economical, there must be other noneconomic factors influencing facility waste management decisions. Potential factors affecting waste management decisions may include inertia, inadequate investment capital, recent technological advancements not widely known, unavailable or fluctuating markets for recycled materials, concerns about the quality of recycled materials, and issues of product specification. In addition, for facilities with sunk capital that are only incurring the cost of operation and maintenance, the economics of recycling may not be favorable due to the initial capital investment required for the recycling system."[51]

5.1.3 Conclusions on Regulatory Incentives and Disincentives To Metal Recovery

Viewing the trade association information and economic analysis presented in this section, it appears that RCRA Subtitle C regulation has both incentives and disincentives on metal recovery of hazardous waste.[52] Trade association information submitted indicates that the regulated community believes that several Subtitle C provisions including the derived from rule, RCRA Subtitle C permitting, facility-wide corrective action and hazardous waste shipping costs may be limiting factors on maximizing opportunities for additional metal recovery capacity in the United States. The study that EPA commissioned on the economics of recycling indicates that RCRA Subtitle C also has a favorable effect of encouraging metal recovery by increasing treatment and disposal costs for metal bearing hazardous waste (this is discussed further in Section 5.2). This mixed impact of RCRA incentives and disincentive is consistent with EPA's case studies of metal recovery operations presented in Chapter 6. Case study respondents indicated mixed impacts of RCRA Subtitle C regulation on their operation. Some respondents indicated mild impacts; others, more serious. The net effect of RCRA Subtitle C regulatory incentives and disincentives is assessed in Section 5.2.

5.2 Indirect Regulatory and Non-regulatory Factors Affecting Metal Recovery Operations In The United States

To properly assess the effect of RCRA Subtitle C regulations on metal recovery of hazardous wastes, it is critical to understand the indirect impact of RCRA Subtitle C on metal recovery through creating markets for metal recovery as an alternative to traditional treatment and land disposal of metal-bearing hazardous wastes. It is equally important to assess the international and domestic demand for metal commodities to assess the marketability of recovered materials from metal recovery operations.

This section will summarize trend data and the current status of these two factors and how they affect metal recovery operations in the United States. In Section 5.3, the net effect of RCRA Subtitle C regulation and other factors will be evaluated in terms of their impact on metal recovery of hazardous wastes.

5.2.1 Hazardous Waste Treatment and Disposal Costs

Essentially, metal recovery of hazardous wastes can be considered a substitute for traditional hazardous waste treatment (primarily stabilization) and land disposal. Because they are substitutes, metal recovery will be more attractive to the generator as treatment and land disposal become more expensive. Conversely, metal recovery will be less competitive if less expensive forms of treatment and disposal become available. A generator of hazardous waste will presumably seek to limit his waste management costs and long term liability.

From the perspective of the metal recovery operation, generators can be charged user fees up to the point where the user fee equals the comparable tipping charge at a treatment, storage or disposal facility (TSDF). All other factors constant, if the user fee exceeds the tipping fee, generators will elect to dispose rather than ship their wastes for metal recovery. The exception is for limited metal-bearing hazardous wastes that have recovery specified as their treatment standard under the Land Disposal Restrictions (LDR). As mentioned previously, LDR specify treatment levels for restricted wastes prior to their disposal on the land (40 CFR Part 268). Although usually the specified treatment is a performance level for either the waste extract (i.e., leachate) or waste concentration itself (i.e., total levels), for selected metal-bearing hazardous wastes such as nickel-cadmium batteries, spent lead acid batteries and high-category mercury wastes, the LDR specifies recovery as the treatment standard. For these latter wastes, even if tipping fees for treatment and disposal are less expensive than recovery, these wastes must still be recovered because of the LDR.

In the past, metal recovery projects may have been constrained due to low tipping fees for treatment and disposal. For example, in 1986 one feasibility study on the economics of citing a central recovery facility to process plating wastes in Missouri concluded that the facility could not operate profitably because the user fee it would have to charge to become profitable would be substantially higher than the transportation cost and disposal costs of shipping the wastes to a locally located Subtitle C landfill[53]. This study was completed prior to the promulgation of LDR treatment standards for plating wastes. It is likely that the economics would change substantially if treatment costs were factored into the analysis.

Data and economic analysis indicate that land disposal and treatment costs have increased substantially over the last ten years. The treatment and disposal costs avoided when hazardous wastes are managed for metal recovery are a powerful regulatory incentive to recover rather than dispose of wastes.

One report indicates that hazardous waste treatment and disposal costs increased from an average of $153 per ton in 1984 to an average of $239 per ton in 1990.[54] This report projects that hazardous waste treatment and disposal costs would increase to an average of $384 per ton by 1995. A 1990 commercial survey summarized as a final report in July 1992 for EPA indicates that most of the increase in this cost is treatment cost (stabilization).[55] Survey respondents in the report indicated significant increases in wastes going for stabilization since 1987. The report attributes this increase to LDR treatment standards for heavy metals and states that there is near unanimous agreement among surveyed firms that this is the case.[56] The report also attributes most of the increase in stabilization cost to LDR treatment standards that compel more expensive stabilization processes to attain the standards.[57]

Trend data indicates that increases in hazardous waste management costs will continue to increase. Annualized hazardous waste compliance costs are projected to increase from $ 1.725 billion in 1987 to $ 12.062 billion by the year 2000.[58]

The report 1990 Commercial Survey of Selected Firms In The Hazardous Waste Management Industry cited earlier included 4 metal recovery firms operating 5 facilities. In addition to attributing increases in stabilization costs to LDR treatment standards, the report states that:

> "Waste volumes going to metal recovery have increased substantially since 1987 as LDRs raised the cost of waste management involving land disposal. Air pollution control dusts from primary steel production in electric arc furnaces (RCRA waste code K061) were responsible for most of the increase. LDRs for characteristic metal wastes and metal finishing wastes (e.g., electroplating waste sludges) also contributed to this growth.[59]

The report continues that metal recovery will experience a dramatic increase in quantities of wastes processed. The report states that the reasons for the expected growth are: 1) LDRs will continue to increase the cost of conventional hazardous waste treatment and land disposal, 2) hazardous waste landfill capacity will decrease creating an incentive to look for alternatives, 3) waste generators believe metal recovery will lower liability concerns, and 4) municipal waste regulations will force manufacturers of metal-bearing waste streams such as spent nickel-cadmium batteries to take back these materials and manage them as hazardous wastes.

Some survey respondents in the report noted that some metal recovery operations still have difficulty in competing in price with stabilization and landfilling.[60] However, survey respondents identified metals recovery as a growth market more frequently than any other form of treatment or resource recovery listed in their response.[61]

As mentioned previously at the beginning of this chapter and this report, it should be noted that increasing treatment and disposal costs, while important regulatory incentives for metal recovery of hazardous waste, cannot ensure that additional metal recovery will occur. To reiterate, some metal-bearing hazardous wastes are simply not amenable to recovery either technically or economically. In other cases, metal recovery operations may not be geographically proximate to generators so that increased hazardous waste transportation costs to metal recovery operations may offset any price advantage that the recovery operation offers over treatment and disposal. Notwithstanding this qualification, it appears empirically that increased treatment and disposal cost are largely responsible for increased recovery of hazardous waste since 1980.

5.2.2 Metal Prices In The United States and Their Relationship To Metal Recovery of Hazardous Waste

Metal reclamation operations that recover metals from hazardous waste can derive revenue from two sources, user fees and earnings from the sale of recovered metals. User fee revenues from generators of hazardous wastes are dependent in part upon the price of substitute treatment and disposal services. This was discussed in the previous section. Similarly, earnings from the sale of recovered metals is dependent upon the world market demand for metal commodities. This section reviews trends in U.S. metal prices from the mid-1970's before RCRA hazardous waste regulations were promulgated to 1990 when the most recent metal recovery data are available.

It is important to understand U.S. metal prices during this time frame for the following reason. In order to determine the net effects of RCRA Subtitle C regulation on metal recovery of hazardous waste, independent non-regulatory factors, such as U.S. metal prices, that may either encourage or discourage metal recovery of hazardous waste need to be evaluated. To the extent possible, the magnitude of non-regulatory factors must be assessed relative to other factors such as RCRA Subtitle C regulation.

Several considerations concerning U.S. metal prices and metal recovery of hazardous waste are in order. First, the type of secondary metal materials recovered from hazardous waste are often materials that have been partially reclaimed but need to be reclaimed further. These materials may be metal concentrates or intermediate materials which would require additional smelting or processing to complete the reclamation process. For example, a metal recovery operation may produce a zinc or lead concentrate from a metal-bearing hazardous waste such as K061 that must undergo further processing.

Thus, U.S. metal prices do not directly translate into the price paid for the secondary metal intermediates and concentrates that often come from metal recovery operations although the two types of prices are related. Primary concentrates and intermediates compete with and substitute for secondary metal intermediates and concentrates in the production of metal commodities. Independent economic factors can influence the demand for each type of material in producing the metal commodity.

Of course, when a metal recovery operation does produce a completely reclaimed material, the link between U.S. metal prices and revenue that the metal recovery operation derives from the sale of its products is a direct one. An example of the latter scenario are the metals produced at the U.S. Filter Recovery Services facility in Minneapolis, MN (the case study of this facility is presented in the next chapter). The electrowinned nickel from U.S. Filter Recovery Services is completely reclaimed and does not require further processing.[62] This material will compete with other secondary materials such as nickel scrap as substitutes for primary copper and nickel metal.

A second consideration in evaluating U.S. metal prices and metal recovery of hazardous waste pertains to the type of wastes reclaimed and the metal commodities themselves. The range of commodity prices for metals is quite wide. Looking at average 1993 commodity prices for metals typically reclaimed from hazardous waste in Table 5.1, one can see that expected revenue from metal recovered from hazardous waste depends as much on the types of metals present in the waste as it does upon the concentration of the metals.

Table 5.1 Average 1993 Metal Commodity Prices

Metal	Average 1993 Commodity Price Per Unit (London Metals Exchange Unless Otherwise Indicated)
Silver	$4.20/troy ounce (New York)
Nickel	$2.33/lb
Copper	87¢/lb
Cadmium	45¢(New York)
Zinc	44¢/lb
Lead	18¢/lb
Iron Scrap	4.8¢/lb (Pittsburgh, Philadelphia, Chicago)
Chromium	2.7¢/lb (South Africa), 4.9¢/lb(Turkey)

Source: U.S. Bureau of Mines, Mineral Commodity Summaries 1994.

If the metals recovered from the hazardous waste are completely reclaimed, they may sell for 80 to 90 percent of the world commodity price. If the metals recovered is an intermediate or concentrate, its value will be much less as a percentage of the world commodity price.

The degree of the incentive or disincentive of U.S. metal prices on the metal recovery of hazardous waste depends upon a number of factors including: 1) the proportion of revenue derived from the sale of recovered metals versus the revenue derived from user fees, 2) the average total cost per pound of recovering the metals, 3) the concentration and type of metals present in the waste, and 4) the type and concentration of impurities in the waste.

Other things being equal, U.S. metal prices will have a greater effect upon metal recovery operations that reclaim metals from homogenous materials that are relatively constant in composition such as spent-lead acid batteries where the commodity (lead) is of relatively high concentration and consistent quality. Historically, the recovery rates of these batteries has been closely correlated with the world price of lead (it should be noted however that this is currently not the case)[63].

For metal recovery operations that reclaim metals from industrial sludges, by-products and spent materials, these metal-bearing hazardous wastes are often variable in terms of the type and concentration of recoverable metal constituents and impurities. Often, metal reclaimers set specifications that may limit the recoverability of a large portion of specific waste stream that is too contaminated with impurities or too low in recoverable metals to be reclaimed.

Even if a metal is amenable to recovery, it may only be marketable for a lower value end use, e.g., one not requiring high levels of purity. In these situations, U.S. metal prices may not affect metal recovery in exactly the same way as it would if the recovered metal were fit for a wider variety of higher value end uses. Also, U.S. prices of lower grade metals (i.e. those with lower levels of purity) closely track prices for higher grade metals because lower grade metal prices are discounted from the higher grade metals.

Notwithstanding these considerations, U.S. metal prices is an important contributing factor influencing metal recovery of hazardous waste. This review of U.S. metal prices will focus on commodities most commonly recovered from hazardous wastes: copper, lead, zinc, nickel.

The price for metal commodities in the United States depends upon both the supply and demand or production and consumption of metals domestically and abroad. In general, when supply of a commodity is constant, changes in the price of the commodity are directly proportional to changes in demand to the commodity. So that, for example, if production of a metal is constant, an increase in the demand of lead will cause an increase in the price of the metal; a decrease in demand will cause a price decrease. In contrast, when demand is constant, the price of a metal is generally inversely proportional to its supply. In other words, if the demand for a metal remains constant, an increase in the production of the metal will decrease the price; a decrease in production will lead to a price increase.

After a post-World War II boom, world metal demand began to slow in the mid-1970's.[64] Actual trends in world metal consumption for copper, lead, zinc and nickel lagged far behind projected trends. Average annual growth rates in world consumption between 1979 and 1987 for these commodities were 0.7, 0.0, 0.9, and 1.5 percent respectively. By comparison, the rates between 1960 and 1973 were 4.8, 4.2, 5.6 and 6.4 percent.[65] Growth rates were even lower in the OECD countries.

The origins of this trend began in the Energy Crisis of 1973 and subsequent world recession. World metal production actually increased during the 1970's in spite of the slow down in world consumption. This depressed the world price of metals and minerals due to oversupply.[66]

To respond to depressed market conditions, metal producers made economic adjustments including cutting production and closing inefficient operations. Labor costs were reduced through layoffs and wage reductions. By 1986 and 1987, markets for metal had improved dramatically. According to the National Research Council, between 1986 and 1988, the value of raw mineral materials produced in the United States has doubled from $5.8 billion to $10.4 billion.[67] Factors contributing to the recovery include the economic adjustments described above and increased world metal demand resulting from economic recovery. During this time period, the average annual growth rate in world consumption of copper, lead, nickel and zinc was 2.5, 1.6, 5.6, and 3.4 percent respectively.[68]

To more specifically analyze trends in domestic metal prices and their relationship to metal recovery of hazardous waste, EPA has looked at price information provided by the Bureau of Mines[69] for four metals: copper, lead, nickel and zinc. The Agency has looked at price information over three five year periods: 1976 to 1980, 1981 to 1985 and 1986 to 1990. This information is summarized in Table 5.2 below.

The 1976 to 1980 period represents a period prior to promulgation of RCRA hazardous waste regulations when secondary materials could be discarded inexpensively without extensive liability or cost considerations. The 1981 to 1985 period represents the period when RCRA regulations were in force prior to enactment of the land disposal restriction (LDR) program. Generators of metal-bearing hazardous wastes could dispose of these wastes in landfills, surface impoundments or deep wells without being subject to treatment standards. This period also represents a period of world recession and staggered economic growth. The 1986 to 1990 period represents the period when RCRA reauthorization was complete and the LDR program was put into effect. Metal-bearing hazardous wastes became subject to treatment standards added to the expense of their disposal. As mentioned above this period was also when mining and metal producers cut production and world demand increased stimulating higher prices.

Data indicate that commodity prices in the United States for metals commonly recovered from hazardous wastes decreased in the early to mid-1980s in response to the factors of oversupply and economic recession mentioned above. These prices increased in the late 1980's due to world recovery and closure of inefficient operations. Data in Table 5.2 indicates that the real price of copper, lead, nickel and zinc in the United States was as high or higher in the mid to late 1970's before RCRA than in the late 1980's when RCRA regulations were in place.

Because of data limitations for metal recovery rates of hazardous waste during the 1980 to 1989 period, assessing the strength of the recent increase in U.S. metal prices relative to increased treatment and disposal costs as an incentive to metal recovery of hazardous waste is difficult. To some extent, the relative strength of each factor depends upon the material recovered and the presence of other factors than U.S. metal prices and treatment and disposal costs. Available data will be analyzed in Section 5.3.

Table 5.2 U.S. Metal Prices For Selected Metals Between 1976 and 1990

Commodity/Time Period	Time Period	Average Real Price Based on Constant 1987 Dollars ($/lb)[70]	Average Percentage Annual Change In Price During Period
Copper	1976 to 1980	1.262	+2.65
	1981 to 1985	0.844	-12.00
	1986 to 1990	0.997	+10.60
Lead	1976 to 1980	0.578	+9.10
	1981 to 1985	0.297	-17.5
	1986 to 1990	0.345	+16.9
Nickel	1976 to 1980	3.79	+3.7
	1981 to 1985	2.63	-9.5
	1986 to 1990	3.85	+25.9
Zinc	1976 to 1980	0.574	-7.4
	1981 to 1985	0.487	-2.4
	1986 to 1990	0.564	+11.1

5.3 Assessment of RCRA Subtitle C Regulation On Metal Recovery of Hazardous Wastes: Spent-Lead Acid Batteries and Industrial Sludges, By-Products and Spent Materials

In addition to data limitations, considerable uncertainty on the type and extent of impacts on metal recovery from independent factors complicates the assessment of the impact of RCRA Subtitle C regulation on metal recovery of hazardous wastes. Although this report has tried to summarize and evaluate the affects such factors as U.S. metal prices (probably the principle independent factor), other factors such as civil liability (nuisance suits for example), state and local government regulation (zoning), other Federal regulation such as Superfund liability, international law, anti-trust activities and criminal activity may affect metal recovery of hazardous waste.

Notwithstanding these qualifications, EPA has been able to review existing information and make general conclusions about the impact of RCRA Subtitle C regulation on metal recovery of hazardous waste. This information is presented below in below in Subsections 5.3.1 and 5.3.2.

EPA has reviewed available information on metal recovery rates for metal-bearing hazardous wastes to determine the impact of RCRA Subtitle C regulation on metal recovery of these wastes. Information to conduct this analysis is available for two categories of metal-bearing hazardous wastes: 1) spent lead-acid batteries (SLABs) and 2) industrial sludges, by-products and spent materials. Because of data limitations, portions of RCRA Subtitle C metal-bearing hazardous wastes such as commercially generated metal-bearing wastes (e.g., selected batteries, thermostats, selected photographic wastes) are not represented in this analysis. Many of these wastes are generated in the service sector as either spent materials or by-products of commerce. The potential for metal recovery of these materials is variable and should not affect the overall conclusions of this study.

Spent-lead acid batteries and industrial sludges, by-products and spent materials will be analyzed separately to determine how RCRA Subtitle C regulation has affected the recovery of these materials. This is critical since spent lead acid batteries have historically been recovered prior to promulgation of RCRA Subtitle C regulation in 1980 where industrial sludges, by-products and spent materials have not. Moreover, on the basis of available information, it appears that recovery rates for SLABs (except in 1992) appear to be more closely related to the world metal commodity prices than for industrial sludges, by-products and spent materials whose recovery may be more closely related to the cost of treatment and disposal.

5.3.1. Spent Lead-Acid Batteries

Spent lead-acid batteries (SLAB) are spent materials that are regulated as hazardous wastes under RCRA Subtitle C. SLAB are generally categorized as D008, characteristic lead wastes. SLAB are generated in a manner different than industrial hazardous wastes. Because they are generated in residential, industrial, and commercial sectors, these materials require consolidation for collection and transport prior to recovery.

To encourage cost-effective collection and transport of SLAB, they are exempt from generator, transporter and storage requirements prior to arrival at a reclamation facility, 40 CFR Part 266 Subpart G. This means that SLAB destined for reclamation can be shipped by a nonhazardous waste hauler without a hazardous waste manifest and can be stored at a consolidation point (i.e., an interim storage facility that does not also reclaim SLAB) without requiring a storage permit. Reclamation facilities such as secondary lead smelters that recover SLAB are subject to full regulation if they store SLAB prior to recovery.

EPA promulgated these regulations in 1985 when SLAB being recovered first became regulated as a hazardous waste. The reduced Subpart G requirements were developed to minimize interference with an existing infrastructure for SLAB reclamation. As mentioned below, since 1990, SLAB have been subject to a Land Disposal Restriction treatment standard requiring thermal recovery in a secondary lead smelter 40 CFR §268.42.

To reiterate the concerns of battery reclaimers as discussed above, the Association of Battery Recyclers (ABR) contends that RCRA Land Disposal Restriction (LDR) requirements (40 CFR Part 268) threaten to reduce recovery rates for SLAB by significantly increasing battery reclaimer operating costs. ABR states that LDR requirements will raise battery reclaimer costs by requiring expensive retrofitting of indoor waste pile storage areas to comply with containment building standards and requiring expensive residual management costs due to treatment of secondary lead smelter slag. ABR also remains concerned about nonuniform state regulation of SLAB and RCRA permit costs.

To evaluate industry concerns, EPA has reviewed data on SLAB recovery rates and compared them with a number of factors affecting recovery. Putnam, Hayes and Bartlett report that recovery rates for SLAB have been volatile during the period 1960 to 1985, varying largely with the price of primary lead.[71] Average SLAB recovery rates during the 1960 and 1970s were 80 percent and 72 percent respectively. Between 1981 and 1985 the average SLAB recovery rate was 69 percent. SLAB recovery rates increased from an all time low of 61 percent in 1983 to 70 percent in 1985 when SLAB became regulated as a hazardous waste.

In spite of concerns about increasing environmental regulation, recovery rates for SLAB have increased steadily between 1985 and 1990 from 70 percent to 97.8 percent, declining slightly in 1991 in response to a decrease in the price of lead. Average recovery rates and lead prices between 1987 and 1991 are summarized in Table 5.2.[72] These data indicate that SLAB recovery rates have remained relatively high in 1991 (decreasing only 1 percent) despite a 32 percent decrease in the price of world lead. This apparent anomaly may be attributed to a number of other factors including state and municipal laws prohibiting disposal of SLAB in municipal landfills, state and local deposit and refund programs for SLAB, rising Subtitle C treatment and disposal costs, and applicability of the LDR treatment standard in 1990.

Table 5.3 Spent Lead-Acid Batteries Recovery Rates/World Lead Prices 1987 to 1991

Year	Spent Lead Acid Battery Recovery Rate (expressed as percentage)	Average World Lead Price: London Metals Exchange (¢/lb)
1987	88.6	26.99
1988	91.0	29.7
1989	95.3	30.6
1990	97.8	37.05
1991	96.8	25.3

In 1993, 41 states and one city had enacted legislation promoting SLAB recovery.[73] Most of the state legislation included provisions prohibiting the disposal of SLAB in municipal landfills and requiring retailers to accept old batteries when new SLAB are purchased. The EPA report concluded that these efforts were effective in encouraging SLAB recovery. The report also indicated that the additional incentive to recycle SLAB from deposit and refund requirements was less certain.[74]

The effects of RCRA Subtitle C regulation on SLAB recovery between 1985 and 1991 is somewhat more complex than state legislation. RCRA Subtitle C regulation may serve as both an incentive and a disincentive to SLAB recovery. In terms of RCRA Subtitle C disincentives to metal recovery, secondary lead smelters recovering SLABs are subject to storage permit and LDR requirements for SLABs stored prior to reclamation. As stated previously, ABR estimates containment building retrofitting costs to avoid LDR storage prohibitions at $750,000 to $1 million per facility.[75] Also slag generated from the reclamation process is subject to LDR treatment standards for lead prior to disposal. ABR has indicated that treatment and disposal costs for lead slag to be $250 per ton.[76]

These RCRA Subtitle C compliance costs may act as a disincentive to additional secondary lead smelter capacity or capital investment in new projects. Others point out that the different regulatory provisions of RCRA itself are a disincentive to SLAB recovery since slag from primary lead smelting is not subject to Subtitle C regulation at the Federal level while slag from secondary lead smelting may be subject to Subtitle C regulation if it exhibits a characteristic (40 CFR §261.4(b)(7)(ii). RSR corporation in particular has asserted its belief that this is a harmful double standard. However, these actual and potential disincentives must be evaluated against those portions of RCRA Subtitle C regulation that serve to facilitate SLAB recovery and compliment state efforts to encourage this goal.

RCRA Subtitle C regulation may encourage SLAB recovery in two ways: 1) conditional exemption from Subtitle C regulation for SLAB waste handlers prior to arrival at a reclamation facility, and 2) LDR treatment standards specifying the thermal recovery of lead. First, as mentioned previously, SLAB being reclaimed are not subject to RCRA Subtitle C regulation prior arrival at a reclamation facility. Since this conditional exemption would not apply to SLAB being managed for Subtitle C treatment and disposal, the reduced shipping cost and collection cost for SLAB is an added incentive to manage these materials for recovery. Second, RCRA Subtitle C LDR requirements contain an important incentive for SLAB recovery. This is the LDR treatment standard for SLAB that specifies thermal recovery in secondary smelters for SLAB (40 CFR §268.42). This standard became effective in 1990 and precludes other forms treatment prior to land disposal of these materials.[77] This provides an important incentive for SLAB recovery by sustaining demand for secondary lead smelting. The LDR standard may be partially responsible for maintaining the high 1991 recovery rate in spite of a large decrease in the world price of lead.

In conclusion, RCRA Subtitle C appears to have mixed incentives and disincentives for SLAB recovery. The weight of evidence suggests that RCRA Subtitle C regulation has not adversely affected SLAB recovery rates. It is probable that RCRA Subtitle C regulation has been a net incentive for SLAB recovery. The increasing trend of SLAB recovery between 1985 and 1991 is largely due to increasing world prices for lead except for 1991. However, the sudden decrease in lead prices in 1991 due to the world recession and the stable high recovery rate for SLAB suggests that SLAB recovery may be to some extent insulated more now than in the past from the effects of the world price of lead. It is probable that state prohibitions on SLAB disposal in municipal landfills and RCRA Subtitle C incentives for SLAB recovery are the main factors causing the continued high recovery rate of SLAB.

Even if RCRA Subtitle C regulation does not adversely affect SLAB recovery, this does not mean that RCRA Subtitle C disincentives are not making that recovery less profitable for secondary lead smelters. RCRA Subtitle C compliance costs may be substantial. In 1990, the National Research Council (NRC) estimated that compliance costs for all federal environmental regulations average about 6 cents per pound of lead.[78]

NRC reports that these costs have contributed to a loss of competitiveness with the U.S. lead industry relative to foreign lead producers who are subject to less stringent environmental standards.[79] RCRA Subtitle C costs represent a portion of this total and may contribute to this loss of competitiveness.

On the other hand, it is important to assess the potential loss of competitiveness against the potential risk to human health and the environment from the mismanagement of SLAB. As mentioned in Chapter 3, SLAB recovery represents 50 percent of all Superfund and hazardous waste sites involving metal recovery identified in this report. Discarded battery casings and electrolyte (acid) have resulting in extensive contamination of surroundings areas including surface waters, soil and groundwater.
Regardless of whether current RCRA Subtitle C regulations are the most cost-effective management standards available, any proposed alternative set of management standards needs to be carefully evaluated prior to adoption to assure an environmentally protective outcome. As mentioned in Chapter 8, EPA has created the Definition of Solid Waste Task Force to help conduct this type of evaluation.

5.3.2 Industrial Sludges, By-Products and Spent Materials

Metal-bearing industrial sludges, by-products and spent materials include slag, sludge, and dust generated from the production of metals such as steel, copper and lead as well as metal finishing operations such as electroplating, etching and conversion coating. Many of these wastes are either listed hazardous wastes or exhibit a toxicity characteristic for one or more of the TC metals. As mentioned in Chapter 1, if a characteristic sludge or by-product is reclaimed, it is not a solid waste and therefore not subject to RCRA jurisdiction.

In contrast to SLAB, relatively little data is available on recovery of these materials, particularly related secondary materials that are exempt from RCRA reporting requirements. These industrial wastes are also different from SLAB in that their composition can vary widely with the type of raw material placed into the production process. Industrial sludges, by-products and spent materials can vary in terms of the percentage of a particular material that is technically amenable to recovery. Some streams such as K061 are almost completely amenable to recovery. Other materials such as F006 electroplating sludge may vary widely in its composition and degree of contamination (i.e., from grease, oil or other impurities).

The metal products recovered from these materials are most often concentrates and intermediate materials that require further processing before a pure metal is produced. Often, these industrial sludges, by-products and spent materials are recovered in the form of a metal oxide or salt (e.g., lead oxide, lead chloride, lead sulfate). As a general rule, the markets for these materials are lower value when compared with end uses for the metal form of the commodity.

Relatively few if any of these materials were managed for metal recovery before 1980. The GAO reported in 1980 that metals from these wastes were not being recovered because industry believed that there was simply no profit in it.[80] Fewer than 15,000 tons of metals were being recovered.[81] By way of comparison today, one facility, Inmetco, recovers more than that amount from K061, electric arc furnace dust, on an annual basis.[82] As a result, GAO estimated that roughly $3 billion of metal principally copper, iron and aluminum was being lost annually.[83]

According to industry data provided by trade associations and 1989 Biennial Reporting System (BRS) and summarized in Chapter 3, EPA estimates that there are over 1 million tons of industrial sludges, by-products and spent materials (not including SLAB) managed for metal recovery annually.[84] These materials include F006, wastewater treatment sludge from electroplating operations; K061, electric arc furnace dust; K062, spent pickle liquor from steel finishing operations; and characteristic spent materials such as copper etchants. In addition to these metal-bearing hazardous waste, there are other related metal-bearing secondary materials that are not considered hazardous wastes but are nonetheless managed for metal recovery largely as the result of RCRA Subtitle C regulation.

Related secondary materials such as characteristic sludges and by-products being reclaimed may be managed for metal recovery possibly as a result of the exclusion from the definition of solid waste and RCRA Subtitle C regulation. Examples of these materials include solder skimmings from electronic manufacturing and emission control dust from brass foundries. These examples are usually characteristically toxic for lead (D008) and would be considered hazardous wastes if abandoned, or applied to the land. Even though these materials are not considered solid wastes (and therefore hazardous wastes) when reclaimed, they should be considered in any estimate of metal recovery since these materials would be regulated as hazardous waste if discarded in a manner other than reclamation. Characteristic sludges and by-products being reclaimed may be managed for metal recovery to avoid RCRA Subtitle C treatment and disposal costs. In this sense, RCRA Subtitle C may serve as an incentive for metal recovery of materials that though they are not hazardous wastes are closely related.

Because these materials are exempt from RCRA reporting requirements, EPA does not have precise data on what quantities of these materials are managed for metal recovery. However, the most recent Toxic Release Inventory (TRI) data [85](1991) indicates that metal recovery of all metal-bearing secondary materials (including both hazardous wastes and related secondary materials) may be substantial. The data show that of all metal releases 65 percent are managed for recycling. The data also indicate that 82 percent of metals are transferred off-site are managed for recycling (the others are transferred for treatment, disposal, or discharge to a POTW).

The total quantity of metals transferred off-site for recycling is 1.012 billion pounds.[86] This total includes substantial quantities of copper, lead, zinc, nickel and chromium; metals commonly recovered from hazardous wastes. However, two caveats are in order regarding making an inference of TRI data on metal recovery of hazardous wastes and secondary materials. First, TRI data includes estimates of releases from other materials such as industrial Subtitle D, nonhazardous waste.[87] Second, the term "recycling" under TRI may include processes other than metal recovery such as use as an ingredient. Even though the data does not directly correlate with quantities of hazardous wastes and related secondary materials managed for metal recovery, it raises the inference that these quantities may be substantial.

The question raised by both the BRS/trade association data and the TRI data is what accounts for the increase in metal recovery of industrial sludges, by-products and spent materials between 1980 and 1993. The preceding discussion in Section 5.2 of hazardous waste treatment and disposal costs and U.S. metal prices suggests that these are substantial factors in causing the increase. RCRA Subtitle C has resulted in a substantial increase in treatment and disposal costs of metal-bearing hazardous wastes. In addition, RCRA Subtitle C regulation has created a series of incentives for managing hazardous wastes for metal recovery. Some of these incentives include:

- general exemption of the recycling process from regulation (40 CFR §261.6(c)),
- conditional exemption from Boiler and Industrial Furnace Subtitle C regulation for industrial furnaces burning solely for metal recovery (40 CFR §266.100),
- Land Disposal Restriction treatment standards specifying metal recovery for the following metal-bearing hazardous wastes: spent lead-acid batteries, nickel-cadmium batteries, high category mercury wastes (>260 mg/ml), K069 (emission control dust from secondary lead smelting), K106 (wastewater treatment sludge from the mercury cell process in chlorine production), and commercial chemical products (40 CFR §268.42),[88]
- exclusion from the definition of solid waste for characteristic sludges and by-products being reclaimed (40 CFR §261.2(c), while these materials are regulated as hazardous waste if disposed of,
- exemption from Subtitle C regulation for scrap metal being recycled, (40 CFR 261.6(a)(3)(iv),
- variance from the definition of solid waste for materials that are partially reclaimed but need to be reclaimed further (40 CFR §260.30(c)),
- generic delisting levels for nonwastewater residues from high temperature metal recovery (HTMR) of K061, K062 and F006 (40 CFR §261.3(c)(2)(ii)(C)(1)).

Although growth in world demand for copper, zinc, lead and nickel was slow during the early to mid-1980's, as mentioned above world metal demand began to increase around 1986. World consumption of copper, lead, nickel and zinc increased between 1985 and 1989 at an average rate of 3.2, 1.55, 3.8 and 2.1 percent per year respectively.[89] The increase in demand resulted in an average annual domestic increase in price between 1986 and 1990 of 10.6 percent for copper, 16.9 percent for lead, 25.9 percent for nickel (nickel prices spiked in 1988) and 11.1 percent for zinc.[90]

Although there is enough data to show that RCRA Subtitle C and the recent increase in world metal demand are probably the two main factors contributing to metal recovery of hazardous waste, due to data limitations it is not possible to make any conclusions about the relative strength of each factor. Irrespective of the relative contribution of RCRA Subtitle C and world metal markets to metal recovery of industrial sludges, by-products and spent materials, it is clear that incentives created by RCRA for recovery of these materials is substantial.

First, metal recovery has increased and remained stable during periods before and after the increase in metal prices from 1986 to 1990. Substantial amounts of metal recovery of Subtitle C hazardous waste were occurring in 1986 prior to the increase of metal demand.[91] Analysis completed for EPA by the Research Triangle Institute stated that a little more than 1 million tons of hazardous waste (including industrial waste and spent lead-acid batteries) was recovered.[92] This would indicate not only that RCRA Subtitle C apart from world metal demand is a substantial incentive for metal recovery of hazardous waste, but also that portions of RCRA Subtitle C program apart from the Land Disposal Restriction (LDR) treatment standards were contributing to that incentive since the latter were not in effect in 1986. Also, trade association data submitted to EPA by generators and reclaimers of metal-bearing hazardous waste indicate substantial quantities of listed industrial sludges such as F006 and K061[93] were recovered in 1992 relative to 1989 and 1990 when the world price of metals peaked out and began to decline due to world recession.

Second, many metal recovery operations derive 50 percent or more of their revenue from the user fees charged to generators of hazardous waste rather than the sale of recovered materials. This is particularly true for firms recovering the lower value base metal (i.e., copper, lead, zinc) concentrates and intermediates from hazardous wastes. One metal recovery firm representative indicated that the firm earned at least two-thirds of its revenues in user fees. This is not uncommon since the cost of processing often exceeds the revenue derived from the sale of the materials. Third, the relationship between RCRA Subtitle C treatment/disposal costs and metal recovery user fees is a more accurate indicator of an incentive than the relationship between world metal demand and revenue from the sales of recovered metal materials. RCRA Subtitle C treatment and disposal costs are direct substitutes for metal recovery user fees for generators. An increase or decrease in the tipping fees at a hazardous waste landfill or charge for stabilization can directly be related to what user fee can be charged by a metal recovery operation.

In contrast, world demand for metal commodities are not directly comparable to the price a metal recovery operation can charge for its recovered materials. As mentioned above, metals recovered from metal recovery operations are most often recovered in the form a concentrate or intermediate oxide or salt. These materials are usually partially reclaimed and the value added may be marginal compared with the value of the metal commodity. Even completely reclaimed materials from metal recovery operations may be limited to sale as scrap. If the end use markets to which these metals can be used are restricted to lower value markets, then the world price for the metal commodity will not be a accurate indicator for the degree of incentive realized by the owner/operator of a metal recovery operation. The fact that world metal demand is a less reliable indicator creates additional uncertainty relative to RCRA Subtitle C's effect on metal recovery of hazardous waste.

Finally, data in Table 5.2 above indicate that real U.S. metal prices were almost as high or higher for copper, lead, nickel and zinc between 1976 to 1980 than during the 1986 to 1990 period. Yet, as mentioned above, the GAO reported that little or no recovery of metal-bearing industrial waste occurred prior to 1980 because industry did not consider it profitable to do so. This suggests that since real U.S. metal prices are not higher in 1993 than they were before RCRA was enacted that higher user fees made possible by higher treatment and disposal cost are necessary (but not sufficient) to make metal recovery of hazardous waste profitable.

As with SLAB, the disincentives in RCRA Subtitle C regulation identified in Section 5.1 by the regulated community may constrain metal recovery of industrial sludges, by-products and spent materials to some extent and/or make such recovery less profitable. The derived-from rule storage permit requirements and facility wide corrective action are among the most serious disincentives cited previously.

Thus, while RCRA Subtitle C has had a net beneficial effect on metal recovery of these industrial wastes, it is also possible that several RCRA regulatory provisions are constraining metal recovery from hazardous waste from reaching its full potential. As with SLAB these provisions help to ensure that metal recovery that does occur is completed in an environmentally sound manner.

Any proposals to modify or eliminate RCRA regulatory provisions must be evaluated against the adequacy of the proposed alternative to avoid environmental mismanagement that has characterized certain metal recovery operations of the past. The mission of the Definition of Solid Waste Task Force created by EPA in 1992 is to help conduct such an evaluation.

In summary, there are substantial data limitations that inhibit assessment of RCRA Subtitle C regulation on metal recovery of industrial sludges, by-products and spent materials. Available information indicates that RCRA Subtitle C regulation has encouraged metal recovery of hazardous waste through increasing treatment and disposal costs and providing regulatory incentives for reclaimed materials. An increase in world metal demand beginning in 1986 has probably also contributed to the increase in metal recovery of hazardous wastes. Limited information suggests that RCRA Subtitle C has been a substantial incentive, particularly with firms that recover lower value base metal concentrates where revenues from their sale is low to begin with.

Finally, RCRA Subtitle C regulation may also constrain metal recovery of industrial wastes from reaching its potential. However, due to nonregulatory factors, EPA cannot predict whether reductions in Subtitle C compliance cost would significantly affect metal recovery rates of hazardous waste. And as mentioned above, any regulatory modifications must be evaluated carefully to ensure retention of environmentally protective management standards for metal recovery operations. EPA has created the Definition of Solid Waste Task Force to facilitate this evaluation.

5.4 Conclusion

Based on information reviewed in completion of this report, RCRA Subtitle C regulation has been and will continue to be a substantial factor encouraging environmentally sound metal recovery of hazardous wastes. There also appears to be room for improvement to provide additional incentive for environmentally sound metal recovery of hazardous waste. EPA is currently conducting a series of on-going activities to achieve this goal. These activities are discussed in Chapter 8 of this report.

Chapter 6 Case Studies of Metal Recovery Operations Subject To RCRA Jurisdiction

EPA has completed five case studies of metal recovery operations that are currently subject to RCRA Subtitle C jurisdiction. The purpose of completing these case studies is to provide firm specific information on the way RCRA regulation may affect metal recovery of hazardous wastes. To complete these case studies, EPA examined a number of metal recovery operations and selected those operations that the Agency believes help to compare and contrast different aspects of RCRA regulations on metal recovery. EPA has selected: 1) a commercially established hydrometallurgical operation, U.S. Filter, 2) a commercially established pyrometallurgical operation, Inmetco, 3) a pilot scale metal recovery operation using an innovative technology, Molten Metal Technology, 4) a metal recovery operation that partially recovers zinc from steel wastes, Horsehead Resource Development and 5) a battery manufacturer that recovers spent lead acid batteries on site, East Penn Manufacturing Co.. Case studies include the reason for selection, a case history, process description, and RCRA regulatory issues and analysis.

EPA has presented the perspectives of the case study respondents on RCRA Subtitle C regulation in order to learn how each firm views Federal hazardous waste regulations effects on metal recovery from its operations. EPA's presentation of these perspectives does not constitute Agency agreement with the accuracy of the statements. In addition, no statement presented by these case studies should be construed to be a statement of Agency policy or regulatory interpretation regarding the case study respondent's operations or their process outputs (whether wastes or products).

6.1 U.S. Filter Recovery Services Inc; Roseville, MN

EPA has selected U.S. Filter Recovery Services Inc. (USFRS) as a case study for a variety of reasons. First, USFRS has been selected as a commercially established hydrometallurgical metal recovery facility. In contrast to pyrometallurgical case study respondents that use high temperature metal recovery, USFRS recovers metals from hazardous wastes using hydrometallurgical recovery methods such as ion exchange, chemical precipitation and electrowinning. (At least one issue of regulatory significance is that hydrometallurgical metal recovery processes are not potentially subject to Boiler and Industrial Furnace permitting requirements.)

Second, USFRS processes listed materials generated from metal finishing operations (e.g., electroplating sludge) in contrast to other case study respondent waste streams of spent-lead acid batteries and electric arc furnace dust. Metals recovered from metal finishing waste streams can include chromium, copper, nickel, zinc and iron. Metal finishing operations are comparatively smaller and earn less revenue than other generators of metal-bearing hazardous wastes. This limits their options for metal recovery on-site because of economies of scale. For these generators, a central recovery facility may be the only alternative to commercial treatment and disposal of electroplating sludges. This type of facility processes and manages generator's wastes for a user fee (and also sells recovered materials to supplement its revenue)

Third, USFRS is the only commercially established central recovery facility[94] of its type in the United States. Two other attempts to site central recovery facilities for metal finishing operations in the United States have failed at least in part due to federal Clean Water Act enforcement.[95] In addition, two feasibility studies have concluded that central recovery facilities would not be cost-effective when compared with other waste management options.[96] In light of this history and analysis, EPA has studied the regulatory climate and history that has contributed to USFRS' success.

History

In 1982, the Metropolitan Waste Control Commission (MWCC, a local wastewater management authority in Minneapolis-St. Paul) and local industry formed a task force to evaluate the feasibility of a central recovery facility in the area to process wastes and wastewaters from metal finishing operations. In 1983, local industry formed and became share holders of the Metropolitan Recovery Corporation (MRC). In 1984, MWCC and MRC agreed to allow MRC shareholders to apply civil penalties incurred for noncompliance with federal pretreatment categorical standards for metal finishing operations toward the construction of a central recovery facility. MRC shareholder companies raised $1.2 million in revenue for the construction of the proposed facility. In October 1985, MRC submitted an application for a RCRA treatment and storage permit from the Minnesota Pollution Control Agency. Its permit was approved in December of 1986.

In July 1986, MRC formed a partnership with Lancy Recovery Inc. (Lancy) called Metro Recovery Systems (MRS). Lancy provided $2.2 million in additional revenue. The St. Paul Port Authority sold $6.2 million in revenue bonds to complete financing for the facility. The facility was constructed between September 1987 and July 1988 when it became operational and began accepting wastes. In December 1991, U.S. Filter Corporation purchased MRS. It was renamed U.S. Filter Recovery Services in July 1992.

Process Description (Refer to Chart Next Page)

USFRS has contracts with each of its customers to complete processing, transport and collection of both dilute and concentrated waste streams. For dilute wastestreams such as plating rinse waters, USFRS installs a series of ion exchange resin canisters on site at the customer facility. When these canisters become spent, USFRS exchanges the canisters with fresh ones and transports the spent canisters back to the central recovery facility. Metals (principally zinc, nickel and copper) are stripped from the canisters and placed into electrolytic metal recovery cells and recovered from plates as metals. The regenerated resins are then returned to the customer facility. USFRS representatives state that by keeping waste streams segregated that metals recovered from these streams have a higher level of purity than rinse waters that are mixed together and then have metals reconstituted in a series of separate processes.

Concentrated waste streams such as batch dumps are transported from the customer facility to the central recovery facility and segregated by type (acids, alkalines, cyanides, or ammonia). Then, depending upon the chemical characteristics of the waste, it is treated and either processed for further recovery (electrowinning, chemical precipitation, solids dewatering, chrome reduction, cyanide destruction) or stabilized and sent on for land disposal. Metals (zinc, copper or nickel) can be recovered as either a metal (e.g., pure copper) or as a metal compound such as copper oxide.

The USFRS facility itself has a series of engineering controls designed to prevent the release of materials to the environment. The tanks receiving concentrated wastes are made with reinforced fiberglass to contain materials that would corrode steel tanks. The tanks themselves are within a secondary spill containment cement dike that is large enough to contain the contents of an entire tank in the event of a rupture. The facility is entirely surrounded by a six inch curb to prevent releases from the building. The floor is made of eight-inch concrete with double rebar and coated with three layers of plastic impregnated fiberglass to resist penetration by waste chemicals. All joints are sealed with polyvinyl chloride water stops. The floor is also sloped to direct any spill into a series of trenches that leads to a central sump for collection and subsequent treatment.

During EPA's site visit to USFRS in February of 1993, the company was recovering copper oxide for sale to wood preservers, animal feed industries and others. USFRS was also recovering copper and nickel for sale to scrap dealers. The company was investigating the possibility of hydrometallurgical recovery of nickel-cadmium batteries. Other recovered products include regenerated acid and alkaline etchants, and nickel and zinc compounds.

Figure 6.1 Facility Diagram For U.S. Filter Recovery Systems Inc.

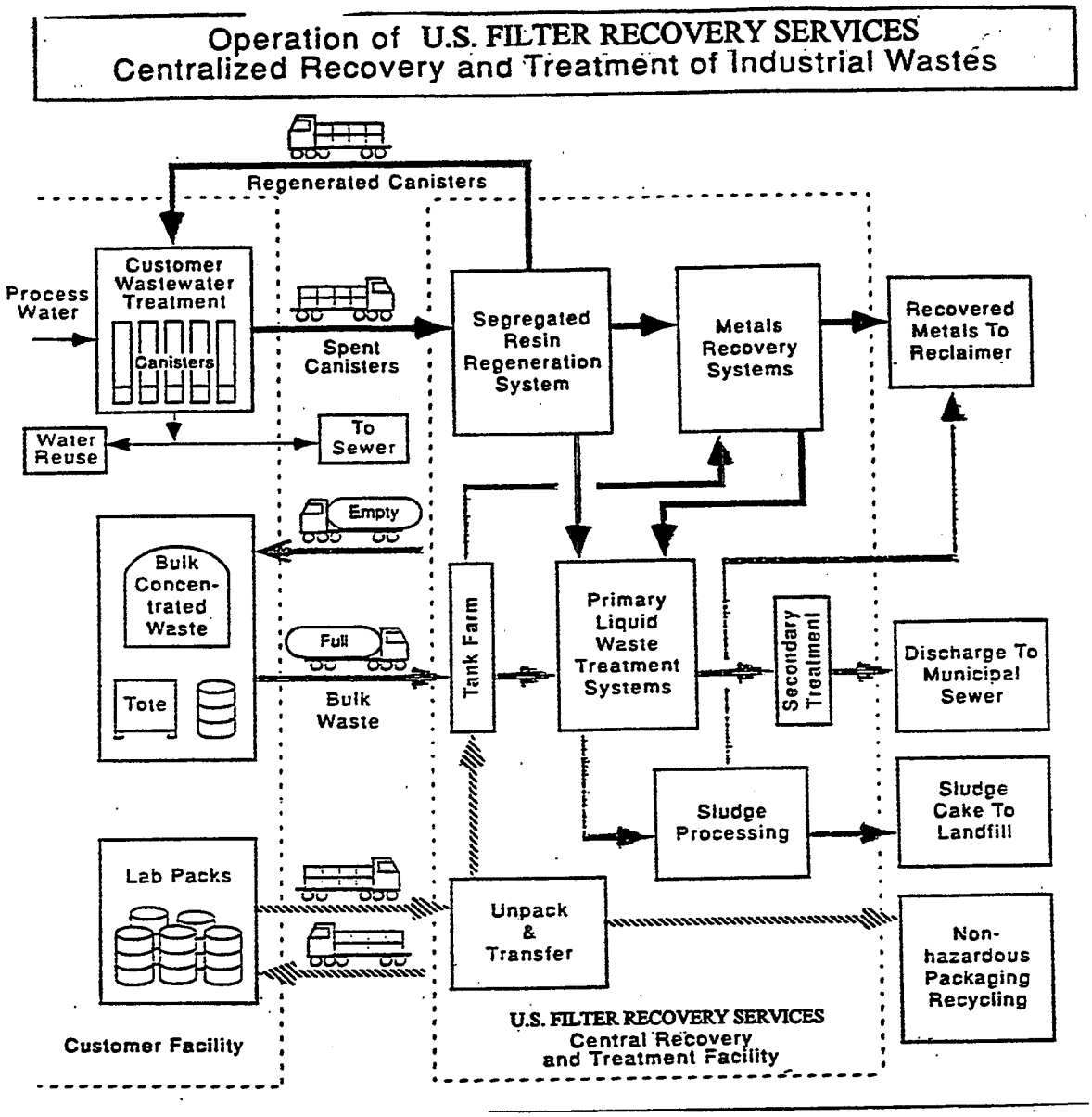

Regulatory Issues & Analysis

In general, RCRA has not been a major regulatory obstacle to recycling at USFRS. The major regulatory issues related to metal recovery for USFRS are 1) the effect of the derived-from rule on managing process residuals from the facility for recovery, and 2) the effect of state taxes linked to the Emergency Planning and Community Right To Know Act. Permitting requirements and corrective action issues have been of secondary importance.

Derived-From Rule

Some of the sludges from concentrated wastes that USFRS receives from its customers are not amenable for recovery in USFRS' process, but may be amenable to high temperature metal recovery. However, USFRS' policy is to manage these materials for treatment and disposal in a hazardous waste landfill. This conservative policy is designed to prevent Superfund liability to USFRS and its customers. USFRS representatives state that many of these materials would be managed for recovery rather than treatment and disposal if not for the derived-from rule. The company is concerned that if the sludges are managed by high temperature metal recovery and the slag is still considered to be a hazardous waste that USFRS and its customers could become potentially responsible parties if the slag becomes part of a Superfund site.

State Taxation

In addition to the derived-from rule concerns, USFRS contends that a major regulatory disincentive to recovering metals from plating wastes is Minnesota's pollution prevention fee. This fee is based on reported releases from facilities under the Emergency Planning and Community Right-To-Know Act (EPCRA also known as SARA Title III). Under the definition of release, management on-site at the plating operation is not a release and would not be taxed. However, if plating wastes are shipped off-site to the USFRS for recovery, this is defined as a release and is therefore taxable. U.S Filter representatives state that this is an economic disincentive for metal platers to ship their wastes to the central recovery facility.

Permitting and Facility-Wide Corrective Action

According to company representatives, permitting and facility-wide corrective action have not been regulatory impediments to recycling at USFRS. Regarding facility-wide corrective action, the facility is located in an industrial park in Roseville, a suburb of Minneapolis and St. Paul. The site inspection did not reveal any releases of contaminants although the company routinely monitors groundwater on its site.

Despite a cost of $800,000 and 14 months to obtain its permit, the company obtained both its RCRA storage and treatment permit in advance of constructing its facility. However, permitting has been a major disincentive to siting additional USFRS facilities across the nation. When asked about regulatory alternatives to permitting such as a permit-by-rule or a self-implementing set of management standards, Brian Rooney, Recovered Products Manager at USFRS,[97] suggested that such an alternative would go a long way to minimize the risk and uncertainty associated with the current permitting process.

As mentioned above, since USFRS is a hydrometallurgical operation, it is not potentially subject to boiler and industrial furnace permit requirements. This is important because plating wastes of the type USFRS recovers may not qualify for the metal recovery exemption of Part 266 of 40 CFR (standards for boilers and industrial furnaces). BIF standards may provide a competitive advantage for hydrometallurgical metal recovery operations.[98]

Greg Norgaard, Vice-President and General Manager of U.S Filter has indicated that cooperation between the Minnesota Pollution Control Agency, Metropolitan Waste Control Commission and USFRS has been the critical factor in the company's success. State and local efforts to assist in capitalizing, siting and permitting the project were paramount in supporting the establishment of the central recovery facility in Minnesota. As mentioned previously[99], the lack of these same factors contributed to failure to establish similar facilities in Cleveland and New York/New Jersey. Plans to develop these facilities failed when plating operations withdrew their support of a central recovery facility in order to install on-site treatment to come into compliance with federal Clean Water Act regulations. By contrast, the significant commitment and flexibility of Minnesota allowed the central recovery facility project to develop.

Although Mr. Norgaard believes that other things being equal that on-site management and recovery of hazardous wastes is preferable to off-site management of these wastes, he also believes that effective on-site treatment and recovery is generally unaffordable to small businesses and that a central recovery facility can offer a series of comparative advantages over on-site management by the generator. He has stated that central recovery facilities can provide better assurance for compliance with federal and state regulations by entering into binding contracts with customers and inspecting customer operations on a regular schedule (this is standard USFRS practice). Second, central recovery facilities can provide technical and managerial assistance to small businesses that generate hazardous waste. Third, because of economies of scale, a central recovery facility can provide a variety of recovery alternatives that are not available with on-site management by generators. Finally, a central recovery facility is better able to find end uses for recovered materials. According to Tom Wentzler, senior vice-president of Tetra Technologies, generators of hazardous waste do not have the sales, marketing, distribution or transportation organization or experience to find end uses for their recovered products as well as an off-site recovery facility.[100]

Mr. Norgaard believes that a central recovery facility is fundamentally different from a commercial treatment, storage, disposal or recovery facility (TSDR). He stated to EPA that a central recovery facility is different in its method of operation in terms of its degree of involvement with its customer operations. Mr. Norgaard feels that TSDRs don't provide the day to day oversight into customer operations and offer the same degree of protection against the mismanagement of hazardous wastes at generator facilities or during transport.

Conclusion

USFRS represents an example of a commercially successful metal recovery operation that has developed largely through cooperative efforts between public and private parties. RCRA regulations do not appear to have significantly impeded the company's ability to recover metals from hazardous waste. RCRA has probably had a beneficial effect by providing markets for USFRS' services (i.e., hazardous waste treatment and disposal cost avoided). The critical regulatory factor in USFRS' success appears to be the cooperation and flexibility provided by the state and local governments. In particular, allowing civil penalties to be used for construction capital was essential in establishing the central recovery facility. Conversely, case histories in Cleveland and New York/New Jersey indicated that stringent enforcement of Clean Water Act regulations may have achieved faster compliance but perhaps at the expense of a better long term option for managing these hazardous wastes.

6.2 International Metals Reclamation Company, Inc., Ellwood City, PA

EPA selected the International Metals Reclamation Company, Inc., (Inmetco) as one of its case study respondents in order to analyze regulatory issues related to a commercially established pyrometallurgical operation. In addition, Inmetco has the distinction of being the only high temperature metals recovery facility in the United States that recovers nickel-cadmium batteries (and thus the only domestic reclamation facility for these materials that may be collected because of EPA's recently proposed Special Collection Rule, 58 FR 8102, February 11, 1993). Inmetco also recovers chromium, nickel and iron from emission control dust generated from electric arc furnaces in the stainless and specialty steel industries. Because the Office of Technology Assessment has identified chromium as a strategic material for the United States, EPA also selected Inmetco as a case study respondent to evaluate the regulatory impact of RCRA Subtitle C regulations on the firm's ferrochrome recovery.

History

The Inmetco Thermal Reduction Process was developed by Inmetco's parent company, Inco Limited, in the mid-1970's. Inmetco began commercial operation in 1978 in Ellwood City, Pennsylvania. The facility site is proximate to about half of the United States stainless steel producers and all ten of the nation's stainless steel producers are Inmetco customers. The company reported earnings of $2 million in 1991.[101] Inmetco applied to the state of Pennsylvania in 1983 for a Part A and in 1985 for a Part B hazardous waste storage permit. The state issued Inmetco its Part B storage permit in November 1992.

Process Description (Refer to Chart Next Page)

Inmetco uses a two stage pyrometallurgical process to smelt a variety of metal-bearing materials into a metal pig consisting of iron, chromium, nickel and other metals. This pig is then sold (or returned under a tolling agreement) to stainless steel producers for reuse in their process. The main feedstocks for the Inmetco process are emission control dust from electric arc furnaces (K061, a listed hazardous waste), mill scale from steel operations and grinding swarf (a mixture of grinding chips, abrasive particles and bond from grinding operations). Inmetco also uses a variety of other feedstocks including nickel-cadmium batteries, electroplating sludge (F006, a listed hazardous waste) and sludge generated from spent pickling solutions from steel finishing operations (K062, a listed hazardous waste when it is not lime stabilized).

The process itself uses a rotary hearth furnace to melt and partially reduce iron and nickel from an oxide into a base metal form and to reduce hexavalent chromium to the trivalent form. The process intermediate is transferred in a pellet form from the rotary hearth furnace to a stationary electric arc furnace for smelting and complete reduction. The process generates a metal pig (described above) and a slag.

In addition, two pollution control by-products are generated: a wastewater treatment filter cake from the wet scrubber on the rotary hearth furnace and a baghouse dust from the electric arc furnace. The slag is processed and sold as road bed aggregate and construction materials. Both pollution control byproducts are sent to Horsehead Resource Development for zinc, lead and cadmium recovery.

Figure 6.2 - Process Flow Diagram For Inmetco

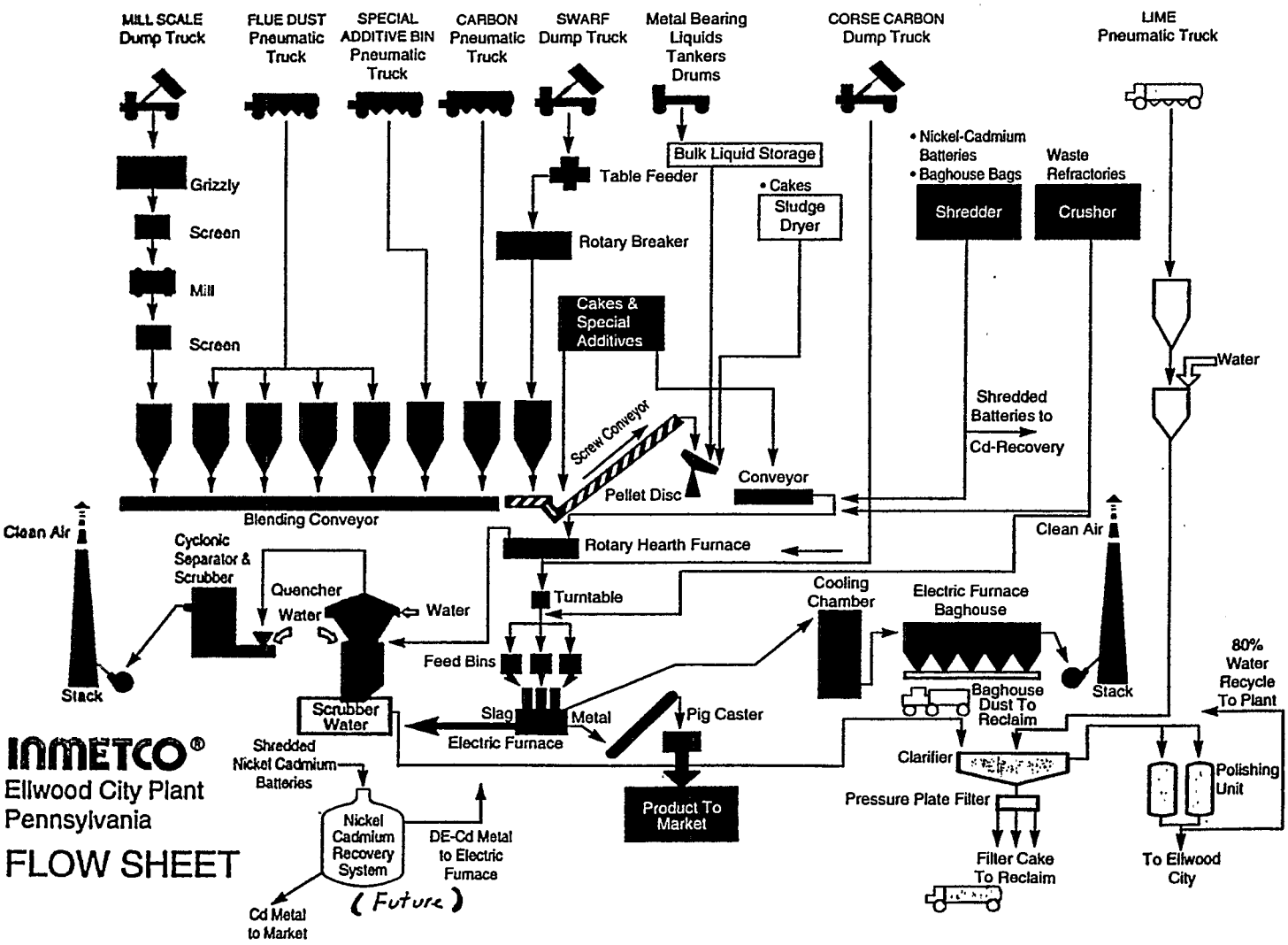

1992 Process Outputs At Inmetco, Ellwood City PA

Recovered Metals	22,000 tons of metal pig (including 15,000 tons of iron, 3240 tons of chromium, 2080 tons of nickel, 210 tons of molybdenum)
Slag	14,700 tons
Pollution Control Byproducts	6500 tons (including 1500 tons of zinc, 272 tons of lead, and 110 tons of cadmium)

Regulatory Issues & Analysis

In October 1991, Inmetco provided EPA detailed sampling and analysis results of its process inputs and outputs, pursuant to an agency-supervised Best Demonstrated Available Technology data gathering project.[102] More recently, Inmetco has communicated to EPA its view of the effect of RCRA Subtitle C regulations on its operations.[103] The company has also put forth a narrative proposal for setting up an alternative regulatory system for "hazardous reclaimable materials".[104] Finally, in response to Agency requests, Inmetco has developed an analysis comparing the risks and benefits of recycling metal-bearing hazardous wastes versus the risks and benefits of producing metals from virgin ores.[105]

In its submissions to the Agency, Inmetco has identified a number of RCRA Subtitle C regulatory issues that are of concern to the company, including slag management, permitting, facility-wide corrective action and financial assurance. The company believes that these issues are regulatory disincentives to metal recovery. The company has also identified notification of hazardous waste generation and management, a tracking system, appropriate storage standards and land disposal treatment standards for as generated waste as beneficial aspects of the RCRA program. The company believes that land disposal restrictions help create demand for metal recovery. However, Inmetco has stressed that RCRA land disposal restrictions can be counterproductive when in combination with the derived-from rule (40 CFR Part 261.3), they require metal recovery slags to be disposed of in Subtitle C landfills.

Derived-From Rule/Residual Management

Inmetco ranked potential slag management under EPA's derived-from rule (40 CFR Section 261.3) as the greatest regulatory impediment to metals recovery. During the Agency's visit to the Inmetco facility in December 1992, company representatives stated that their slag was being purchased for $6 to $8 a ton for use as road bed aggregate or construction material. The company reported to EPA that treatment and disposal of the slag as a hazardous waste under Subtitle C of RCRA would cost the company between $300 and $350 per ton for a total of $4-5 million a year total cost. Inmetco stated that this would have turned the company's 1991 profit into a loss.[106]

Inmetco reported in its response to an EPA trade association survey that the state of Pennsylvania's recently adopted PK-4 amendments to state hazardous waste regulations define "hazardous waste" more broadly than EPA's rules and appear to have a narrower exemption for waste-derived products used in a manner constituting disposal (40 CFR Section 266.20.). This is likely to place additional burdens on slag management. The company reported a 1992 expenditure of $900,000 to manage air pollution control dusts and wastewater treatment sludges. Inmetco estimates that this will increase to $1.2 million in 1993.

Permitting

The company has identified permitting as a major regulatory disincentive to metal recovery. Inmetco's storage permit cost the company an internal investment of $50,000 per year over 4 years and $200,000 in outside legal, engineering, laboratory and administrative costs. Pennsylvania state regional officials of the Department of Environmental Resources (PADER) responsible for permit oversight of Inmetco have questioned this estimate and indicated to EPA that early drafts of Inmetco's permit application were incomplete which was a contributing factor to the 5 year period of time required for the company to obtain permit approval.[107] Inmetco spends an additional $50,000 in labor expenses for a full time environmental technician to implement and ensure compliance with the storage permit requirements. In addition to permit application costs, Inmetco estimates that compliance expenditures to satisfy permit conditions include $3 million in capital expenditures.

Potential and prospective permitting issues for the company include becoming subject to Boiler and Industrial Furnace Permit requirements, 40 CFR Part 266 Subpart H and Pennsylvania state PK-4 regulations that require permits for the reclamation process. Based upon its experience in obtaining a storage permit, Inmetco estimated that obtaining each of these permits could cost $300,000 to $500,000 each which the company said was a significant disincentive to metal recovery.

Corrective Action

Inmetco ranked facility-wide corrective action as the third most serious regulatory impediment to metals recovery. Although the company did not attempt to estimate the potential compliance cost associated with corrective action, Inmetco does state that it represents a serious disincentive to investment in a new metals recovery operation or siting a facility at an existing manufacturing site. The company believes that undesirable social and environmental outcomes of this requirement might include siting a facility in a "greenfield" location (i.e., one without previous contamination) and creating a disincentive to invest in urban enterprise zones to create jobs and expand the tax base.

Financial Assurance & Legal Costs

Inmetco identified other regulatory issues of concern including financial assurance, stigma and legal costs associated with hazardous waste management. Financial assurance mechanisms for Inmetco include a $4 million irrevocable letter of credit and a $250,000 post-closure bond posted with the Pennsylvania Department of Environmental Resources. The company estimates its actual financial assurance cost at $55,000 annually. Although Inmetco could not quantify stigma, it does state that stigma requires additional time and money for community relations. Inmetco's legal fees for the last 5 years for assistance on regulatory and legislative changes were $750,000. This was in addition to legal fees incurred in connection with obtaining the facility's storage permit.

Inmetco has submitted to EPA its impressions of the opportunity cost of these regulatory expenditures. The company stated in its response to an EPA trade association survey that additional investment in high temperature metal recovery capacity is foregone in order for Inmetco to comply with its RCRA Subtitle C regulatory obligations. Inmetco has quantified nickel-bearing and chromium-bearing materials it believes are currently not being reclaimed due to inadequate reclamation capacity. These materials include[108]:

o	Nickel-Cadmium Batteries	10,000 - 20,000 Tons/yr.
o	Plating Wastes	30,000 Tons/yr.
o	Spent Chromium Refractories	25,000 Tons/yr.
o	Chromium Leather Tanning Wastes	10,000 Tons/yr.
o	Superalloy Slags	5000 Tons/yr.
o	Metal Catalysts	500 - 1,000 Tons/yr.
o	Ni-Cd Battery Production Sludges	450 Tons/yr.
o	Chromium Tailings (one time basis)	60,000 Tons

Inmetco also indicated in its response to an EPA trade association survey that if the company could expand capacity, it would be able to directly recover cadmium from Ni-Cd batteries, zinc and manganese from alkaline batteries, and copper, cobalt and vanadium from wastestreams containing those metals.

Inmetco estimates that it recovers about 1 ton of nickel, 1.55 tons of chromium and 7.2 tons of iron for every 27 tons of nickel-bearing secondary material that it processes. The company estimates that it would take 110 tons of virgin nickel-bearing sulfide ore to produce one ton of nickel. Secondary nickel recovery is more efficient because the nickel-bearing materials are more concentrated resulting in energy and material conservation and lower pollution for each ton of metal produced. Inmetco states that roughly 100 tons of tailings are produced for every ton of nickel recovered from virgin ores. By comparison, only 6.8 tons of slag are produced for every ton of nickel Inmetco recovers (or .6 tons of slag per ton of metal pig recovered).

Similarly, Inmetco reports that it uses less than half as much energy to produce a pound of nickel and chromium as its parent company uses to produce a pound of nickel and copper from virgin ore in Canada. Furthermore, Inmetco has recently installed a new water recycling program that has increased its use of recycled water by over 90 percent, and the company is striving to attain zero discharge of water within two years.

The ferrochrome and ferronickel that Inmetco recovers in its metal pig has value to the U.S. both as a commodity that may mitigate the U.S. balance of trade deficit and as a strategic material (for more on these issues see Chapter 7). Both nickel and chromium are imported metals. According to the 1993 Mineral Commodity Summaries published by the Bureau of Mines, 74 percent of the chromium and 64 percent of the nickel in the United States are imported, and much of the rest is produced by reclamation or reuse of secondary materials. In addition, the U.S. Office of Technology Assessment has identified chromium as a strategic material.[109]

Chromium is an ingredient in the production of stainless steel and other superalloy steels. According to the 1993 Bureau of Mines Mineral Commodity Summaries, chromium has no substitutes for superalloys, its main strategic use. Over 60 percent of imported U.S. chromium comes from South Africa or Zimbabwe. Currently about 26 percent of U.S. demand for chromium is satisfied through stainless steel scrap.

Inmetco has submitted a proposal to EPA to establish an alternative set of regulatory requirements for metal-bearing hazardous wastes that are destined for reclamation.[110] The company indicated in its submission that the proposal is one that they would consider acceptable if they were considering expansion of their metals recovery operation, but the company does not purport to speak for other metal recovery operations.

Inmetco's proposal starts with a definition of legitimate metals reclamation. According to the company, a legitimate recycler must recover material suitable for return to commerce as a product or feed material for an industrial process. Materials received at the facility would have to meet reclaimer specifications and be managed in a manner designed to minimize loss. The facility would retain records to document the receipt, processing and sale of products derived from secondary feed materials. Finally, at least one of the products recovered would have to be returned to commerce for a use that is not land applied and must meet specifications for use as a product or feed material.

Regulatory requirements for managing metal-bearing hazardous wastes destined for reclamation under the Inmetco proposal are as follows. First, such wastes would be defined as "hazardous reclaimable materials" to acknowledge that they are destined for reclamation and to avoid the stigma associated with the term "hazardous waste". Second, generators and reclaimers would notify EPA of their location, operation and material management activities. Third, materials destined for off-site reclamation would be manifested. Fourth, reclamation facilities would be subject to waste analysis requirements, security requirements, personnel training requirements, location standards for new facilities, and chemical accident prevention and preparedness activities.

Fifth, materials stored prior to reclamation would be subject to management standards based on existing container, tank or containment building standards. Sixth, owner/operators of reclamation facilities would be responsible for unit-specific closure and corrective action related to the reclamation process. Seventh, financial assurance requirements would reflect the more limited closure and corrective action responsibility and be based upon less conservative assumptions. Eighth, reclamation facilities would conduct testing, maintain records and allow inspections sufficient to demonstrate compliance with aforementioned standards. Finally, metal reclamation slags would be excluded from operation of the derived-from rule, so that they would not be restricted from use in roadbuilding or other construction applications provided they meet appropriate health based criteria. Inmetco believes that current generic exclusion levels for its slag are too conservative.

In evaluating the Inmetco proposal, it should be noted due to time and resource constraints that the Agency has not requested an audit of Inmetco's operation to verify company estimates of regulatory expenditures or to assess total compliance burden. Nor has EPA questioned the company about economic predictions related to market factors which could independently affect a business decision to expand HTMR capacity. Notwithstanding this, Inmetco has supplied EPA with specific estimates of its compliance burden and its best guess at what materials might be recovered in the event of regulatory modifications.

The trade off to society presented in this situation appears to be as follows. On the one hand, reducing regulatory burdens and associated costs on metals reclaimers will create an incentive (of unknown magnitude) to expand metals recovery capacity. Other things being equal, this is desirable, because metals reclamation conserves nonrenewable resources, reduces energy demands and pollution as compared to producing metal from virgin ore, keeps metal-bearing materials from being landfilled and serves our country's balance of payments and strategic interests.

On the other hand, depending on how RCRA Subtitle C regulations are modified, streamlining regulatory requirements for metal-bearing hazardous wastes being reclaimed could create some additional environmental risk beyond that which would exist if the materials were regulated in accordance with full Subtitle C hazardous waste requirements.

The uncertainty in answering Congress's question about optimizing RCRA's dual goals of environmental protection and resource conservation may relate to non-regulatory factors that affect the company's operation. Source reduction of chromium, material substitution for metal in products, expanded capacity outside of the United States for hazardous waste metal recovery and the end of the Cold War (and defense-related applications for chromium superalloys) may independently create market conditions that are unfavorable for company expansion. EPA cannot quantify the probability or extent of a metal recovery operation's increased investment or expansion due to specific changes in regulations simply because of market uncertainty. This does not mean that regulatory modifications to existing Subtitle C requirements would not be beneficial. It simply means that the Agency is unable to predict or forecast a market outcome from specific regulatory changes.

Conclusion

In contrast to the USFRS case study, the effects of RCRA Subtitle C regulation on Inmetco's operation appear to be mixed. Inmetco has been in operation since 1978 before RCRA Subtitle C regulations were promulgated. Since that time, electric arc furnace dust (K061) has been listed as a hazardous waste and land disposal restriction (LDR) standards based on high-temperature metals recovery have been promulgated. LDR standards for nickel-cadmium batteries specify metal recovery prior to land disposal. Most recently, EPA has proposed a new Part 273 regulation which would facilitate collection and transport of nickel-cadmium batteries for recovery. These changes have provided or would provide favorable market conditions for the recovery of these materials at Inmetco's operation.

Inmetco has stated by contrast that management of its slag, permitting costs and other previously mentioned regulatory requirements are disincentives to expanding metals recovery capacity at the company's facility in Ellwood City, PA. Inmetco feels that the Pennsylvania state PK-4 regulations may subject the facility to additional permitting requirements and more stringent management standards for the company's slag.

The impacts of these regulatory requirements are uncertain but may be substantial if company compliance burden estimates are accurate and depending on how the Pennsylvania regulations are implemented. Inmetco believes that regulatory modification to RCRA Subtitle C would provide an important incentive for the company to make the investments necessary to expand its operation. Because of the overlapping state and federal regulatory roles, Inmetco believes it is important to ensure that appropriate regulatory modifications at the federal level are matched by suitable actions at the state levels.

EPA is not certain of the extent of the incentive. Because of market factors affecting long term demand for metal commodities, regulatory modifications may be necessary but not sufficient to cause a significant increase in company investments in expanded metal recovery capacity. The net effect of RCRA Subtitle C regulations on Inmetco's operation appears to be mixed and somewhat uncertain for regulatory disincentives. The derived-from rule and management of the company's slag appear to be the leading regulatory issue for consideration.

6.3 Molten Metal Technology Inc., Waltham, MA

EPA selected Molten Metal Technology Inc. (MMT) of Waltham, Massachusetts as a case study in order to analyze regulatory issues related to an innovative metal recovery technology entering the marketplace. EPA wanted to analyze regulatory impacts of Subtitle C regulation on new firms using innovative technologies that are not commercially established. The MMT process has been selected for study in part because of: 1) the wide variety of potential feed materials processed and materials recovered, 2) the unique nature of the process (e.g., the company's description of the complete dissociation of materials injected into the process which may have aspects of both recycling and treatment depending upon the feed materials), 3) the operation of the firm's R&D facility under a state of Massachusetts "Recycling R&D" permit and 4). regulatory issues identified by MMT as impediments to metal recovery not often raised by the regulated community, but possibly acting as very serious disincentives. EPA believes that evaluating an innovative technology like MMT will help the Agency understand both the RCRA incentives and barriers to developing new technologies for metal recovery from hazardous waste.

History

The catalytic extraction process (CEP) used by MMT (described below) was developed by Dr. Christopher Nagel in 1986 while employed at U.S. Steel. Dr. Nagel developed CEP further during his stay at the Massachusetts Institute of Technology. Dr. Nagel developed CEP from traditional steel making technology.[111] MMT was formed November 1989[112] and owns the patent rights to the CEP.[113]

To develop the commercial applications of CEP, MMT has entered into business alliances with a number of firms. In 1990, MMT arranged $5 million in equity financing from Travelers Corp. of Hartford Connecticut. In April of 1992, Travelers committed an additional $10 million.[114] In April 1991, MMT and L'Air Liquide of France entered into a joint venture in which L'Air Liquide has committed over 50 people and $30 million. L'Air Liquide is also involved in research and sales in MMT. In May 1992, MMT reached agreement with Du Pont to perform technical assistance and marketing services.[115] Du Pont has also contributed $1.5 million and technical training for hazardous waste handling techniques.[116]

In May 1991, MMT announced an agreement with Rollins Environmental Services, a hazardous waste management firm, to participate in technical development of the CEP process. In October 1992, Rollins funded $1.2 million for a joint venture with MMT and provided two senior technical staff to explore treating halogenated and metal-bearing wastes.[117] Finally, in June 1991, MMT established a marketing agreement with Am-Re Managers, an environmental insurance company, to market MMT technology to Am-Re's client base. Am-Re has indicated interest on testing MMT technology on specific waste streams to reassure prospective clients of the technology's effectiveness[118].

MMT has completed construction of a $10 million, 36,000 square foot recycling research and development facility in Fall River, Massachusetts. EPA completed a site visit of the Fall River facility on January 26, 1993. The facility includes a 5 pound, 20 pound, 100 pound and a one ton CEP unit (note: CEP unit weight refers to the weight of molten metal in the unit). A commercial one ton CEP unit would be capable of processing 15,000 tons of solid waste per year. MMT is currently conducting treatability studies at the facility. The Massachusetts Department of Environmental Protection (MADEP) issued MMT permits to conduct treatability studies in August 1992 and February 1993. MADEP issued an operating air permit to MMT in December 1992. MADEP issued a R&D recycling permit to MMT in September 1993. As discussed below, MMT has quantified its permit application costs at over $300,000 exclusive of in-house expenses estimated by the company to be at least equal to that amount.[119] Approximately half of this estimate can be attributed to the R&D recycling permit. The regulatory issues surrounding that permit are discussed below. Because MMT does not intend to store materials at Fall River for which a RCRA storage permit is required prior to inserting them into its process, the company has not applied for a RCRA Part B storage permit.

Process Description (Refer to Chart Next Page)

MMT is developing and commercializing a type of process known as the Catalytic Extraction Process (CEP). The historical development of this process is described above. The CEP unit is based on a steel converter unit that is used to melt steel scrap. The CEP process differs from a steel converter in that the hood of the CEP unit is sealed and air tight to maintain a reducing environment.

Essentially, the CEP unit is a steel cylinder containing a molten metal bath (usually iron or in some cases nickel or other metals) that is maintained between 1320°c and 1925°c depending on the feed material. Feed materials, flux (to remove impurities) and oxygen are added into the bath from the bottom of the cylinder. Feed materials are gaseous, liquid, sludge or small particle solid feed. Specific wastestreams that MMT is looking at include PCB's, nickel acetate, aluminum potliners, spent nickel catalysts, incinerator ash, pesticides, transuranic wastes, flyash, municipal waste, and petroleum wastes.

These process inputs partition to the metal bath, the slag layer (referred to by MMT as the specialty inorganic phase) or the gas phase. As MMT literature describes it, organic constituents of feed materials dissociate into carbon monoxide and hydrogen. Nonvolatile metals partition to the metal bath. Inorganic elements like silicon and calcium are captured in the slag layer. MMT literature describes process outputs as the metal bath, vitreous material (slag), and recovered gases (H, CO).

The first step of the CEP process is to dissociate the feed into its elemental constituents and this may be thought of as "treatment". However, in most if not all applications, MMT has stated that the intended operation would "complete" the process by reconstituting these elements into useful products. Although there may be instances wherein based upon the particular feed material and/or the resultant products, the application may not qualify as "recycling", MMT believes that the principle intended applications include the production of useful products.

The fate and transport of hazardous constituents, such as lead or cadmium, from hazardous waste feedstocks is an important factor in evaluating both the legitimacy and safety of a metal recovery operation. MMT reports that all organic hazardous constituents are destroyed in the metal bath. Hazardous metal constituents would partition to the metal bath, the vitreous layer or the off-gas system depending upon the specific metal constituent and the operating conditions (including temperature) of the CEP unit. At the time of this writing, MMT is conducting trials to assess the optimal treatment and recovery conditions of their process for managing hazardous constituents of their CEP feed materials.

Figure 6.3 - Process Flow Diagram For MMT (process outputs are labeled from MMT literature)

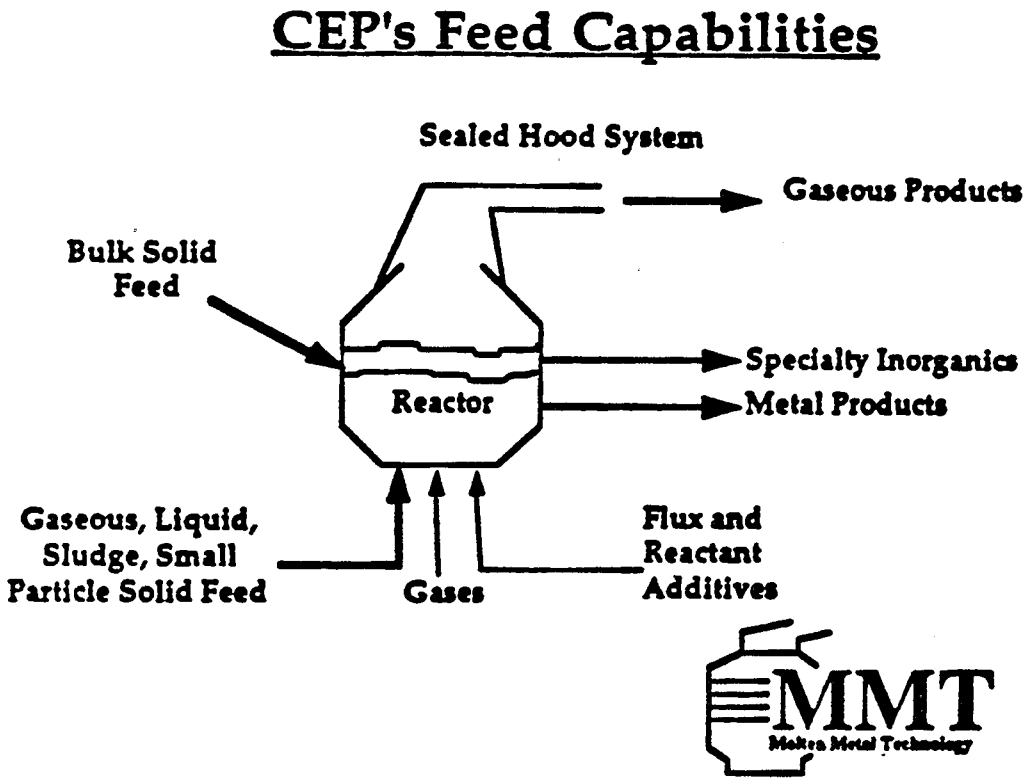

MMT has provided EPA with an example of how the CEP process can be applied to a metal-bearing hazardous waste stream, nickel-hydrocarbons and nickel catalysts. As discussed in Chapter 7, nickel is largely an imported metal. According to the Bureau of Mines, the United States imported roughly 64 percent of its nickel from Canada, Norway, Australia and others. Recovering nickel from metal-bearing hazardous waste may be one way to lessen the U.S. balance of trade deficit for mineral commodities.

Because the following description of the CEP process and nickel-bearing feedstocks in this example is provided by MMT to EPA, please note that EPA has not verified the facts stated in the description. Further, this example does not constitute an EPA endorsement of the CEP process. EPA does not endorse specific commercial processes.

MMT has stated that metal-containing feeds are particularly well suited for processing utilizing CEP technology. MMT has identified spent nickel catalysts and other nickel-hydrocarbon streams as prime examples and MMT has evaluated a number of these nickel streams. MMT has provided the following example of a nickel stream which it has evaluated; the nickel-hydrocarbon feed material contains about 12% nickel, 66% carbon and 5% hydrogen, with the remaining elements principally being oxygen, nitrogen and phosphorous, as well as trace amounts of other elements (such as 200 ppm of chlorine). This material, together with oxygen and flux (calcium oxide and alumina) are fed into a molten nickel bath.

MMT states that the process first dissociates all of the feed materials into their elemental constituents. Nickel is dissolved in the metal bath, with essentially all of it being recovered as high-quality metallurgical-grade nickel (e.g.; it contains less than 0.5% of impurities). MMT states that the carbon and hydrogen are converted and recovered as CO and H_2 which is commercial grade, gaseous Syngas product, and is suitable (as produced or after it is processed by conventional gas purification equipment) for use in the production of methanol, acetic acid and other chemical processes. Other elements present in the nickel-hydrocarbon feed are primarily partitioned to the vitreous or slag layer and recovered. This vitreous material is principally CaO, $Ca_2P_2O_5$, and P_2O_5 with trace amounts of other materials (e.g.;$CaCl_2$) which are securely bound in the vitreous lattice. MMT states that the material has sufficient physical properties to be used as commercial grade aggregate and possibly commercial grade abrasive.

MMT maintains that CEP applications such as these demonstrate that CEP is a bonafide environmentally sound recycling technology for several reasons. First, a mass balance for nickel-hydrocarbon feed material demonstrates that all or substantially of the feed constituents are converted into commercial grade products. Based upon the elemental composition of the nickel-hydrocarbon feed:

metal phase	2 molar % (i.e.; essentially 100%) is recovered as metallurgical grade nickel which is worth $6000/ton;
gaseous phase	97 molar % is recovered as commercial grade Syngas, which is worth $50-150/ton; and
vitreous phase	1 molar % of aggregate or abrasive which is worth between $5 and $30 per ton.

Second, the feed's principle toxic impurities (i.e., toxic organic compounds) are completely dissociated and converted to useful gaseous products (CO and H_2) comparable in composition and converted to other commercial grade Syngas and any inherently toxic materials (e.g., heavy metals) will either converted, recovered and/or placed in a benign form in the vitreous lattice. The vitreous material contains elements from the nickel-hydrocarbon feed, as well as elements from the flux and oxygen feeds. A relatively small amount of vitreous material is produced (approximately 1 ton of vitreous material for each 8.0 tons of nickel-feed). As a worst-case scenario, any vitreous material which did not meet product specification MMT maintains will pass TCLP and be a benign material.

Regulatory Issues & Analysis

RCRA Subtitle C regulatory requirements may affect new metal recovery operations that use innovative technologies differently than they impact commercially established metal recovery operations. New metal recovery operations that use innovative technologies are in the position of having a higher burden to demonstrate their potential effectiveness and safety to potential customers and regulators than many older, well known operations. Establishing the technical and economic feasibility of the operation may prove to be a greater challenge than for a commercially established operation. RCRA Subtitle C regulatory provisions that may have a greater effect upon innovative metal recovery technologies include certain application and permit issuance requirements for research, development and demonstration permits (40 CFR Section 270.65), and exclusion of samples undergoing treatability studies from RCRA Subtitle C regulation including the 250 kilogram limit on waste processing within a 24 hour period (40 CFR Section 261.4(f).

Regulatory determinations on the legitimacy of the process (i.e., whether the operation is in fact recycling or merely treatment) may also be more problematic for innovative metal recovery technologies due to the regulator's lack of familiarity with both the "process" and the "product" of an innovative technology. In contrast, facility-wide corrective action may have a lesser impact on a testing facility for an innovative technology than a commercially established recycling operation because the latter may have a more difficult time siting the facility. Finally, RCRA Subtitle C permitting requirements appear to affect both types of operations.

Under its regulations at 310 CMR 30.200, the Commonwealth of Massachusetts regulates recycling materials which EPA does not regulate as "solid wastes" (e.g. characteristic sludges and by-products being reclaimed). These materials are regulated by MADEP as Class A regulated recyclable materials. Regulated recyclable materials which EPA does consider as solid/hazardous wastes are generally regulated as Class C regulated recyclable materials. MADEP requires RCRA storage permitting for Class C material, but not for Class A.

MMT has identified a series of RCRA Subtitle C regulatory requirements and exclusions as incentives or disincentives to metal recovery for innovative technologies becoming commercially established. RCRA **incentives** include land disposal restriction (LDR) requirements for metal-bearing hazardous waste, treatability study exclusions from RCRA Subtitle C regulation, closed-loop recycling exclusions to the definition of solid waste, regulatory exclusions for totally-enclosed treatment facilities, and the general exclusion for the recycling process. RCRA **disincentives** for metal recovery for innovative technologies becoming commercially established include technology-based LDR treatment standards (i.e., where a specific technology must be used), permit requirements for storage prior to reclamation, the absence of a research, development and demonstration permit that will encourage recycling operations, and establishing the legitimacy of a reclamation operation.

Land Disposal Restrictions (as an incentive)

MMT reiterated the belief of many metal recovery operations that the land disposal restrictions treatment standards (40 CFR §§ 268.41-43) create favorable market conditions for recovering metals from hazardous wastes. Part 268 does this either directly by specifying metal recovery as the required treatment for recycled wastes prior to land disposal (e.g., spent-lead acid batteries, nickel-cadmium batteries, high category mercury-bearing wastes) or indirectly by raising treatment and disposal costs of metal-bearing hazardous waste.

Treatability Exemption

The second RCRA regulatory incentive MMT identified for metal recovery for innovative technologies is the exemption for treatability studies for testing facilities (40 CFR 261.4(f)). Testing facilities conducting treatability studies on hazardous waste are exempted under this provision from substantially all RCRA Subtitle C regulatory requirements (Parts 124, 262-266, 268, 270 and Section 3010 RCRA notification). This incentive is limited by the 250 kilogram per day limit on the quantity of hazardous waste that can be tested at the facility (40 CFR Section 261.4(f)(3)). The difficulty created by this limitation according to MMT is that processing only 250 kilograms of material per day is insufficient to demonstrate the feasibility of the CEP process for many feedstocks.

MMT has stated that 250 kilograms of feed material is insufficient because of lack of sufficient test duration and the inadequate test data that results. This creates two problems.[120]

First, because the state of Massachusetts administers research and development recycling permits, the state authorized MMT to conduct treatability studies in August 1992 and February 1993. The state has conditioned issuance of the R&D recycling certifications on satisfactory results during the treatability studies; the 250 kg limit makes gathering satisfactory data difficult. MMT maintains that 250 kg. is simply too small an amount to reasonably demonstrate CEP's applicability to particular material streams. For example, in the 1-ton unit, 250 kg would allow only about 1-2 hours of operation. For most applications, this would be an insufficient time for reliable steady state demonstrations of the quality of the recovered resources, accurate mass balances, process economics, etc.

Second, the 250 kilogram limit makes it difficult for MMT to demonstrate to the potential customers the technical and economic efficiency of the process. At the time of this writing, EPA is proposing a regulation to increase the daily 250 kilogram limit for some hazardous wastes (i.e., contaminated soil and debris).

Closed-Loop Exclusion/Totally Enclosed Exemption

MMT in its literature identifies both the closed-loop recycling provision (40 CFR Section 261.4(a)(8)) and the totally enclosed treatment provision (40 CFR Section 264.1(g)(5)) as possible incentives for its operation. The closed-loop recycling provision excludes secondary materials from the definition of solid waste if they are reclaimed and returned to the production process in which they were generated and reused within the production provided that 1) only tank storage is involved and the entire process through reclamation is enclosed through pipe or similar means, 2) reclamation does not involve controlled flame combustion, 3) secondary materials are not stored in tanks longer than 12 months without being reclaimed and 4) the reclaimed material is not used to produce a fuel or used in a manner constituting disposal.

The totally enclosed treatment provision exempts owner/operators from RCRA permitting standards (40 CFR Part 264) that operate facilities that meet the definition of a total enclosed treatment facility as defined in 40 CFR Section 260.10. Under federal regulations a totally enclosed treatment facility is defined as one that is directly connected to an industrial production process, which is constructed and operated in a manner which prevents the release of any hazardous waste or constituent into the environment during treatment (40 CFR Section 260.10). EPA is not commenting at this time on the prospective application of either of these provisions to the MMT process.

Recycling Exclusion

The final RCRA Subtitle C regulatory incentive identified by MMT is the general regulatory exclusion for the recycling process, 40 CFR Section 261.6(c). This provision states that in general that the recycling process itself is not regulated. This would mean that metal recovery operations that do not store prior to reclamation would not be subject to RCRA permit requirements nor the facility-wide corrective action requirements and financial assurance requirements that have been identified as serious regulatory impediments to metal recovery from hazardous wastes.

Evaluation of how the RCRA regulations apply to a "recycling process" requires a determination of whether the process involves "use/reuse" and/or "reclamation" of materials. Under RCRA, a material is "recycled" if it is used, reused or reclaimed. 40 CFR Section 261.1(c)(7). "Used or reused" means "employed as an ingredient in an industrial process to make a product...however, a material will not satisfy this condition if distinct components of the material are recovered as separate end products (as when metals are recovered from metal-containing secondary materials)". 40 CFR Section 261.1(c)(5). "Reclaimed" means "processed to recover a usable product or regenerated". 40 CFR 261.(c)(4).

In many CEP applications, MMT states the organic and non-metallic inorganic components of the feed materials would be dissolved into their elemental constituents and transformed into new materials--specifically, gases such as CO and H_2 and specialty inorganic compounds. MMT states that in these applications, except for any metals in the feed, there is no recovery of distinct components in the CEP feed material because the components have all been dissolved into their elemental constituents. Thus, MMT believes non-metallic CEP feed materials may be considered to be used or reused in an industrial process to make a product without being reclaimed.

If secondary materials are recycled by being used or reused to make a product; the secondary materials would be excluded from the definition of solid waste under 40 CFR 261.2(e)(1)(i), and so the feed materials would not be subject to RCRA storage permit requirements. Also, the recycling process would not be subject to RCRA hazardous waste regulations.

Finally, any residuals from the process would not be subject to the "derived-from" rule which may be a significant impediment for many innovative technologies. As a result, MMT believes that classification of specific CEP applications as use or reuse recycling would provide a significant incentive for the use of the technology. EPA is not commenting at this time on the prospective application of the "use/reuse" provisions of the Subtitle C regulations, 40 261.2(e)(1), to the MMT process.

For waste feeds containing metals, metal components of the feed may be recovered. Thus, with respect to the metal recovery from those feeds, CEP looks more like reclamation because an identifiable component of the feed is recovered. However, if valuable gases and/or specialty inorganics are also produced, use or reuse of CEP feeds may be occurring at the same time that metal components of the feed are recovered. Even if a CEP unit recovering metals is classified as a reclamation process, the CEP unit itself could still be exempt from RCRA regulation[121] (recall that under RCRA Subtitle C, the recycling process is generally exempt from regulation. 40 CFR §261.6(c)(1)), although CEP feeds and process residuals could be subject to RCRA regulation.

Storage Permit Requirements

As with other case study respondents, MMT has identified RCRA Subtitle C permitting as a disincentive to metal recovery from hazardous wastes. Requiring a storage permit could be a concern to the company. The issue of whether or not a treatment permit is required will be discussed below under the issue of legitimacy. As mentioned above, MMT does not store Massachusetts Class C regulated recyclable materials prior to reclamation at the Fall River facility and so has not applied for a storage permit. Nevertheless, storage permit requirements may become an issue for prospective CEP operations where storage prior to reclamation may be necessary.

Also, MMT's concern about the lack of a definition of storage was mentioned during EPA's site visit to the Fall River facility on January 26, 1993. During that visit, MMT showed gravity feed bins (Flo-Bins) that would be used to put feed materials into the CEP process. The EPA representative asked whether or not materials would be accumulated in these bins for prolonged periods of time prior to insertion into the reclamation process. MMT representatives responded that there would be two bins used in a continuous process mode and that while one bin was in use that the other bin would be filled and prepared for use. Thus, the fact that there is no federal definition and many different state definitions for how long a material may be accumulated on site without being considered to constitute storage represents a source of regulatory uncertainty for MMT.

Research, Development and Demonstration Permit

MMT has also stated that the difficulty in obtaining a federal research, development and demonstration permit program that encourages innovative recycling technologies is a major impediment for innovative metal recovery technologies entering the market place. Both MMT and MADEP have noted the difficulty in obtaining a research, development and demonstration permit (RD&D) for recycling at the federal level under RCRA although such a permit exists for treatment and disposal.[122] MMT also identified this difficulty as a specific impediment for innovation metal recovery technologies that are becoming commercially established.

While the recycling process in general is not regulated under RCRA (40 CFR Section 261.6(c)(1)), a research and development permit for recycling could benefit recycling operations that store prior to reclamation. Normally, the benefit to recipients of federal RD&D permits at the federal level is that the Administrator of EPA may issue these permits without many of the Part 124 or 270 permit application or issuance requirements (40 CFR Section 270.65). MMT rejected applying for this type of RD&D permit because of the time and resource commitment for applicants and uncertainty of approval. MMT's specific concerns included the RD&D permit's limited duration (1 year with limited renewals), the reportedly difficult and lengthy permitting process and the focus on demonstrating experimental treatment technologies generally, not the application of a recycling technology to specific materials streams.

Land Disposal Restrictions (as a disincentive)

As noted above, the Land Disposal Restrictions (LDR) provide regulatory incentives that help to create a market for innovative metal recovery technologies. The LDR may also create disincentives for using new technologies. The LDR provide that hazardous wastes or residues may not be disposed on the land unless they meet the Best Demonstrated Available Technology (BDAT) standards specified in 40 CFR §268 1) a specific technology or 2) a concentration based level that is not technology specific. EPA recognizes that concentration-based BDAT standards (which may be achieved using any suitable technology) encourage technological innovation. Nevertheless, some BDAT standards that are technology-based create disincentives for new technologies.

In certain applications, a CEP unit may produce not only valuable products, but also a non-salable residue that must be disposed. Disposal of this material (that MMT believes would not exceed TCLP standards) may be complicated if it is considered a derived-from waste for which there is an existing technology-based standard that by definition CEP would not meet. In this case both the derived-from rule and the technology based BDAT standards could be disincentives to use of CEP technology.

Legitimate Recycling

Another RCRA regulatory disincentive that MMT identified is the lack of specific established criteria for legitimate "recycling" (existing criteria is somewhat vague) to determine whether or not MMT is a legitimate R&D recycler rather than a sham recycler (e.g., one that actually treats rather than recycles). MADEP provided a draft R&D recycling permit to EPA Region I for review that conditions issuance of a recycling R&D certification for MMT on an economic test. The economic test specified that the value of the material recovered is equal to or greater than the operating cost of processing it.[123] MMT maintained that economics should be a relevant factor, but not the sole determining factor. The company also maintained that an economic test should not be the sole measure of legitimate recycling because the benefits of recycling include avoided cost of disposal and avoided future liability.

If a narrow legitimacy test were applied and the CEP process was unable to meet it, the company's R&D recycling demonstrations would be restricted to a smaller class of materials. Additionally, commercial operations which could not pass the test would be regulated as a treatment facilities rather than a recycling facility. As a commercial treatment process, it would be subject to all federal treatment standards and permit requirements. The CEP facility would also be subject to facility-wide corrective action and financial assurance requirements. Although EPA does consider economics as a factor in determining legitimacy[124], there is currently no economic test for legitimacy under federal RCRA rules.

MADEP reconsidered the issue and sought additional input (including that of an economic consultant) and eventually concluded that it was not possible to make a recycling determination solely on the basis of an economic test. The final permit specifies subjective criteria that MADEP will use to determine if a specific waste stream is legitimately recyclable using CEP. The criteria include whether the CEP products are "commodity-like', the relative recovery of products versus waste residuals, and the toxicity and risk associated with CEP products and waste residuals.

In attempting to evaluate the regulatory effects of RCRA Subtitle C on MMT and CEP, it is apparent that both the versatility of the MMT process and the diversity of potential hazardous and non-hazardous wastes processed represent both an opportunity for substantial innovation in hazardous waste treatment or recovery and a source of difficulty for federal and state regulators trying to determine the regulatory status of the MMT process.

The MMT process is unique. Other pyrometallurgical metal recovery operations heat the feed in an oxygen, oxidizing environment rather than a metal bath, reducing environment. Operating temperatures for the MMT process may vary by 600°c depending on the feed material. This variability in temperature can change the fate and transport of hazardous constituents in the MMT process. For example, at the higher operating temperatures, lead will volatilize and be recovered in the off-gas stream. At lower operating temperatures, some of the lead may partition to the slag layer.

The metal bath is usually iron or steel, but may be nickel, cobalt or other metal depending upon the needs of the customer. And in contrast to metal recovery operations that specialize in one waste stream, CEP is potentially applicable to a variety of feedstocks ranging from incinerator ash to nickel catalysts.

The versatility of the MMT process and diversity of wastes processed may eventually foster the recovery of metal-bearing wastes that have heretofore not been amenable to recovery either because they were too contaminated or too dilute in metal content to be cost-effective. At the same time, state and federal regulatory officials evaluating the MMT process may have difficulty assessing the regulatory status of the operation under the current RCRA Subtitle C regulatory framework. EPA has said that in order to assess the intent of the owner/operator regarding the legitimacy of the process it is necessary to evaluate the circumstantial evidence of the process.[125]

The versatility and diversity of the MMT process presents many challenges to a regulator trying to characterize it. In some applications, the MMT process may look more like traditional treatment than recovery (e.g. processing an organic waste that does not recover either hydrocarbons or metals as a separate end products). In other applications, the process may more closely resemble a traditional metal recovery technology (e.g., recovering nickel from a spent nickel catalyst as a ferronickel alloy).

The challenge to the regulatory agency in evaluating a firm like MMT is to find a way to encourage this type of innovation without compromising agency standards for identifying legitimate recycling and protecting the environment. This is not easy when a technology does not fall neatly into any of the categories created by the regulatory scheme.

Conclusion

As of May 1994, MMT had begun its commercial introduction of its CEP technology in the marketplace. The company has contracts in place with a diverse group of clients for four commercial facilities utilizing its technology. Compared with many pilot and bench scale innovative recycling technologies trying to become established on a commercial scale, MMT is relatively well-capitalized and supported by corporate partners and investors. Thus, the company be better able than smaller firms to overcome regulatory disincentives to recycling.

To date, the effects of RCRA Subtitle C regulation on MMT have been mixed. The company has clearly benefited from markets for recoverable metal-bearing hazardous waste created by Subtitle C regulation and regulatory exclusions and exemptions for the recycling process and testing facilities conducting treatability studies. At the same time, the lack of certainty surrounding the company's permitting status and the technical limitations for conducting recycling demonstrations have constrained the company's ability to develop more quickly.

Again, as with the other case studies, it is difficult to assess the proper level of RCRA Subtitle C regulation for MMT and other innovative technologies to optimize RCRA's dual objectives of environmental protection and resource conservation. With MMT, it is all the more difficult because of the versatility of the process and diversity of hazardous wastes processed.

EPA is examining how its regulations affect the innovation of technologies that recover metals from hazardous wastes. In 1990, EPA recognized that its RD&D permitting program has not been streamlined to encourage technological innovation.[126] As mentioned above, the Agency is also proposing a rule to modify its treatability exemption for testing facilities.

EPA has also recently encouraged innovative technologies for treating electric arc furnace dust (K061) by specifying treatments standards based on high-temperature metal recovery (HTMR) and establishing generic exclusion levels for HTMR residuals managed in Subtitle D landfills.[127] This case study will support existing Agency efforts to meet this goal by providing insight into which RCRA Subtitle C regulatory provisions are disincentives to innovative recovery technologies.

6.4 Horsehead Resource Development Company, Inc.[128]

This case study is written solely to familiarize the reader with the processes involved in a specific metal recovery operation (Horsehead Resource Development Company, Inc. (HRD)) and to present the company's view of how, based on its experience, the RCRA hazardous waste regulations affect such metal recovery operations. This case study discusses very complex issues in simplified terms, using general statements about the hazardous waste regulations that may not accurately reflect the regulations applicable to a specific situation. In addition, EPA and the Pennsylvania Department of Environmental Resources are currently involved in enforcement proceedings against HRD regarding the status of certain operations and materials under RCRA. Nothing in this case study should be taken to represent the Environmental Protection Agency's position or interpretation of the regulatory status of particular materials, activities, or facilities. Finally, the terminology used in this case study is based on the federal regulations and should not be construed to have any meaning in the context of Pennsylvania state law or regulations.

Horsehead Resource Development Company, Inc. (HRD) was selected for a case study because it is one of the largest and most established operations currently recovering[129] metal from hazardous waste in the country. HRD is also illustrative of several other issues in that HRD has a number of facilities located in different states throughout the country, and HRD's recovery process consists of a number of steps, some of which are conducted sequentially at several of these facilities.

HRD recovers zinc (and smaller quantities of other metals) from electric arc furnace dust, an air pollution control dust generated in the production of steel in electric arc furnaces (EAFs). Electric arc furnace dust has been listed as hazardous waste K061. EAFs are smaller than other steelmaking furnaces and use scrap steel rather than molten pig iron as the main feed stock. Technological improvements and the availability of scrap steel have increased the number of EAFs in use, which in 1992 made up approximately 38 percent of U.S. steel production capacity. It is projected that by the year 2000, EAFs may represent 45 to 50 percent of the national steelmaking capacity.[130] In 1992 it is estimated that 550,000 tons of EAF dust were generated in the United States.

In 1992, HRD processed 376,000 tons of EAF dust, which is approximately 68 percent of the EAF dust generated domestically. From that EAF dust (and 9,000 tons of other metal bearing wastes) HRD produced 120,000 tons of zinc calcine (from which zinc metal is refined at primary smelters) and 19,000 tons of lead concentrate. This quantity of zinc calcine represents approximately 25 percent of the U.S. zinc concentrate market.

HRD estimates that its recovery processes reduce the landfill capacity necessary for disposal of EAF dust in the United States by approximately 57 percent.[131] HRD further estimates that its recovery processes replace the mining of approximately 1.5 million tons of zinc-containing ore, 300,000 tons of lead-containing ore, and smaller quantities of copper- and silver-containing ore. HRD's processes also recover over 200,000 tons of iron units, roughly 30 percent of which are used in applications that replace the use of other iron sources. Further, this replaced mining activity reduces the mine tailings that would be generated to obtain the same quantities of these minerals from primary production by close to 2 million tons. Sulfur dioxide emissions are also reduced because HRD's sulfur emissions are low and HRD's zinc calcine is low in sulfur compared to zinc concentrates from primary sources. HRD obtains roughly half of its revenues from selling the recovered zinc calcine (and other recovered products). The remaining half comes from the fees paid by EAF generators (steel mills) for the recycling service.

History

Palmerton, Pennsylvania

HRD's oldest facility is located in Palmerton, Pennsylvania on part of the original site of a primary zinc smelter that operated from 1898 to 1980. Zinc concentrates from captive and third-party mines were shipped by train and truck to the smelter in Palmerton, which is located in a coal producing region. In 1929, a pyrometallurgical process utilizing inclined horizontal rotary kilns known as Waelz kilns (from the German word "walzen," which means to trundle or roll) was instituted at the Palmerton facility to process unique zinc ores from captive New Jersey mines. In 1979, EAF dusts were first processed in the Waelz kilns to replace zinc ores as the New Jersey mines began to be depleted. The quantity of EAF dust reclaimed increased over time until 1986, when the New Jersey mines were closed and EAF dust and other secondary feeds became the sole input to the Waelz kilns.

It should be noted that the Environmental Protection Agency listed EAF dust as hazardous waste K061 under the RCRA regulations in 1980 due to its content of lead, cadmium, and hexavalent chromium. Although this regulation became effective over time in various states as each incorporated it into its own regulatory program, the end result was that generators of EAF dust were required to send the waste to a RCRA permitted or interim status treatment or disposal facility. In the case of EAF dust, management options included hazardous waste landfills or recycling operations such as HRD.

In 1986, a second pyrometallurgical recovery step known as calcining was added at the Palmerton facility to further concentrate the crude zinc oxide (CZO) produced in Waelz kilns. Currently, materials are recovered at the Palmerton facility in five kilns (two Waelz kilns, two calcine kilns, and one kiln that can be used for either operation). The HRD Palmerton facility has been storing hazardous wastes under RCRA interim status and is currently involved in litigation with the Pennsylvania Department of Environmental Resources concerning a final RCRA permit.

The Palmerton facility was owned until 1966 by The New Jersey Zinc Company, Inc., then by Gulf + Western Industries, Inc. (now Paramount Communications, Inc.), and was purchased in 1981 by Horsehead Industries, Inc. (HII). In 1986, HRD was created from an existing division of HII and took over the Waelzing operation and the portion of the facility on which the kilns are located. Currently, 45 percent of HRD is owned by HII, 45 percent is owned by Berzelius Umwelt Service AG (a subsidiary of the German company Metallgesellschaft AG), and 10 percent is publicly held.

Chicago, Illinois

In 1988 HRD began Waelzing operations at its second location in Chicago, Illinois. The facility had originally been a petroleum coke calcining plant owned by Great Lakes Carbon Corporation, an HRD affiliate company from which HRD purchased the site. One of the existing petroleum coke calcining kilns was converted to a Waelz kiln. HRD plans to begin operating a second Waelz kiln at the Chicago facility in the first quarter of 1994. Under the State of Illinois's RCRA program, EAF dust recovered at the Chicago plant is considered to be processed immediately upon delivery (i.e., is not considered to be stored on-site) and thus HRD is not required to obtain a RCRA permit for this facility.[132] The facility has air permits for its air emissions.

Rockwood, Tennessee

In December of 1990 HRD began Waelz operations at its third location in Rockwood, Tennessee. Previously a direct reduced iron plant and then a carbon char plant, HRD was able to convert the existing kiln at the plant to a Waelz kiln. Similar to the Chicago plant, under Tennessee's RCRA program HRD is not considered to be storing EAF dust prior to recovery and is thus not required to obtain a RCRA permit for the Rockwood plant. The facility is permitted for air emissions.

Joint Venture: Bartlesville, Oklahoma

In 1988 HRD formed a joint venture with Zinc Corporation of America (ZCA), an unincorporated division of HII, to develop a hydrometallurgical operation to further recover a lead concentrate produced in EAF dust recovery at Palmerton. The purpose for developing the process was to recover a higher quality (maximum value) lead product than was possible with other recycling options. A full-scale plant constructed at a ZCA facility in Bartlesville, Oklahoma has been slow to become fully operational, a difficulty HRD ascribes to a lack of pilot-scale research pushed by a concern on the part of the Pennsylvania Department of Environmental Resources that lead concentrate not be stored at the Palmerton facility for long periods of time while the Bartlesville plant was constructed. Due to a State of Oklahoma court determination that the lead concentrate is not a listed waste under the State's RCRA program, and a State recycling exemption, the Bartlesville plant is not required to obtain a RCRA permit.

Monaca, Pennsylvania

In 1987 HII purchased a division of the St. Joe Minerals Corporation and with this purchase also obtained a new pyrometallurgical metal recovery technology that St. Joe had been researching since the mid-1970s. The process is known as flame reactor flash smelting. St. Joe had constructed a pilot-scale flame reactor unit at a facility in Monaca, Pennsylvania in 1982. The flame reactor technology was conveyed to HRD, who continues to conduct research on the uses and operations of the technology at the Monaca plant which operates under a RCRA Research, Development, and Demonstration permit issued by EPA Region III in Philadelphia.

Beaumont, Texas

In June of 1993, HRD began operation of its first full-scale flame reactor recovering metal from wastes. (The technology has previously been licensed to a U.S. company for a non-waste application.) The plant was constructed on-site at an electric arc steel mill in Beaumont, Texas, owned by North Star Steel, Inc. The flame reactor technology is being used to recover EAF dust generated by North Star and by other nearby steel mills into a material similar to the crude zinc oxide produced in Waelzing. Compared to the Waelz process, the flame reactor technology requires much lower capital investment to construct and a smaller volume of input waste materials to operate economically.

Process Description[133]

As in a primary metal production process, each step in HRD's metal recovery process further concentrates the metals that are to be recovered, including zinc, lead, and cadmium. It should be noted that this also means that the hazardous constituents in the EAF dust (e.g., lead, cadmium) are concentrated further at each step.

HRD's recovery process can generally be described as: 1) the original multi-step process used to recover zinc and other metals from EAF dust, and 2) the flame reactor, a relatively new alternative to the first step in the original process. The original process steps consist of the pyrometallurgical Waelz kiln, the pyrometallurgical calcine kiln, and the hydrometallurgical lead concentrate process. The alternative step, the flame reactor, can replace the Waelz kiln step. In addition, HRD is recycling other non-EAF dust wastes in relatively small quantities through the original process together with EAF dusts, and is exploring options for recycling other wastes using the flame reactor technology either with or without EAF dusts.

Figure 6.4 is a simplified process flow diagram for the first two steps in the original process (Waelzing and calcining). Figure 6.5 illustrates in more detail these two steps as conducted at the Palmerton, Pennsylvania plant. For comparison, Figure 6.6 illustrates the process at the Chicago, Illinois facility, where, as at the Rockwood, Tennessee facility, only Waelzing is conducted.

EAF dust, which typically contains 20 percent zinc, is first received from off-site in trucks or rail cars at HRD's Palmerton, Pennsylvania, Chicago, Illinois, and Rockwood, Tennessee facilities. The dust is unloaded in a receiving building, which is designed differently at each of the three facilities. HRD has upgraded the design of materials handling equipment in the receiving buildings over time as each new building was constructed, partly to improve materials handling and partly to meet Occupational Safety and Health Administration (OSHA) requirements. Prior to being fed into the Waelz kiln, the dust is conditioned by hydration to achieve a free moisture content of about 10 percent, and mixed with coal or coke, and fluxes. Approximately one ton of coal is used for each four tons of EAF dust.

This conditioned mixture is then fed to the Waelz kiln. A Waelz kiln is an inclined horizontal rotary kiln ranging from 160 to 180 feet in length and 10 to 12 feet in internal diameter. The kiln is inclined slightly downward from the feed end with a slope of about one inch per four feet of length. The kiln rotates at a speed of about thirty rotations per hour, and together the incline and the rotation move the feed slowly down the kiln to the discharge end. Residence time for material that moves through the entire kiln is approximately two and a half hours.

As the conditioned EAF dust mixture moves down the kiln it is first dried, and then heated until the coal or coke begins to burn, which eventually raises the temperature of the mixture to 1,100 °C or higher. The burning of carbon (from the coal or coke) in the kiln reduces most of the zinc, cadmium, and lead in the EAF dust to metallic form. These metals volatilize, and are pulled out of the kiln in a gas stream. The metals are reoxidized and captured as particulate in a collector.

The collected particulate is known as crude zinc oxide (CZO), which contains approximately 55 percent zinc. At Chicago and Rockwood, the CZO is pneumatically transferred to railcars and shipped to Palmerton. Some CZO is sold directly to customers. Inert materials are discharged from the kiln and cooled to form a non-vitrified slag that is approximately 45 percent iron and is known as Iron Rich Material (IRM). The IRM is sold for use in cement production (as an iron additive), as construction aggregate, asphalt aggregate, anti-skid material for roadways, on-lot sewage treatment media, and ion exchange water-filtration media.

At Palmerton, CZO from the Waelz kilns at Palmerton, Chicago, and Rockwood (and from the flame reactor described below) is consolidated, and then fed to a calcine kiln. A calcine kiln is similar in size and operation to a Waelz kiln, except that natural gas heat is supplied at the lower end of the kiln to raise the temperatures to between 700 and 1,000 °C, and no coal is added.

Figure 6.4 - Simplified Process Flow Diagram, Waelzing and Calcining

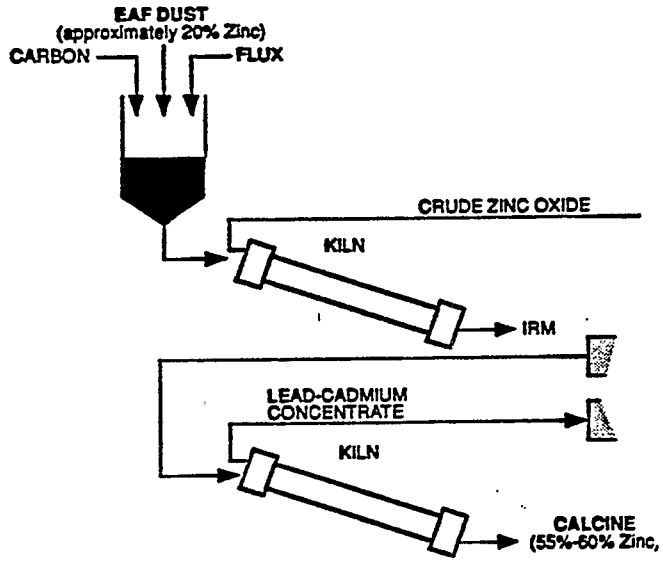

Source: <u>Horsehead Resources Development, EAF Recycling Stalwart Expands Within and Beyond its Core Business</u>, EI Digest, Environmental Information Ltd., May 1991.

As the CZO moves down the calcine kiln, the purity of zinc oxide is increased by selective volatilization of lead, cadmium, and other minor constituents, which are pulled out of the kiln in a gas stream. These constituents are captured in a collector as particulate, resulting in a material known as lead concentrate. This concentrate, which consists of 30 - 40 percent lead and 1 - 2 percent cadmium, is sacked and shipped by rail to the ZCA-HRD joint venture facility at Bartlesville, Oklahoma.

The remaining zinc oxide is discharged from the lower end of the calcine kiln, in the form of zinc calcine, which is approximately 60 - 65 percent zinc. The zinc calcine is sold to ZCA, which uses it as feedstock for its primary zinc smelters. The zinc calcine serves as a substitute for zinc concentrate feedstocks at smelters. An advantage of the calcine over zinc concentrates, however, is that the calcine is low in cadmium, lead, sulfur, and other metallic impurities normally found in concentrates. As a consequence it can be introduced near the end of the smelting process, rather than at the beginning. This has both economic and environmental benefits for the smelter.

Figure 6.5 - Detailed Schematic Process Flow Diagram, Palmerton, PA Facility (Waelz and Calcine kilns)

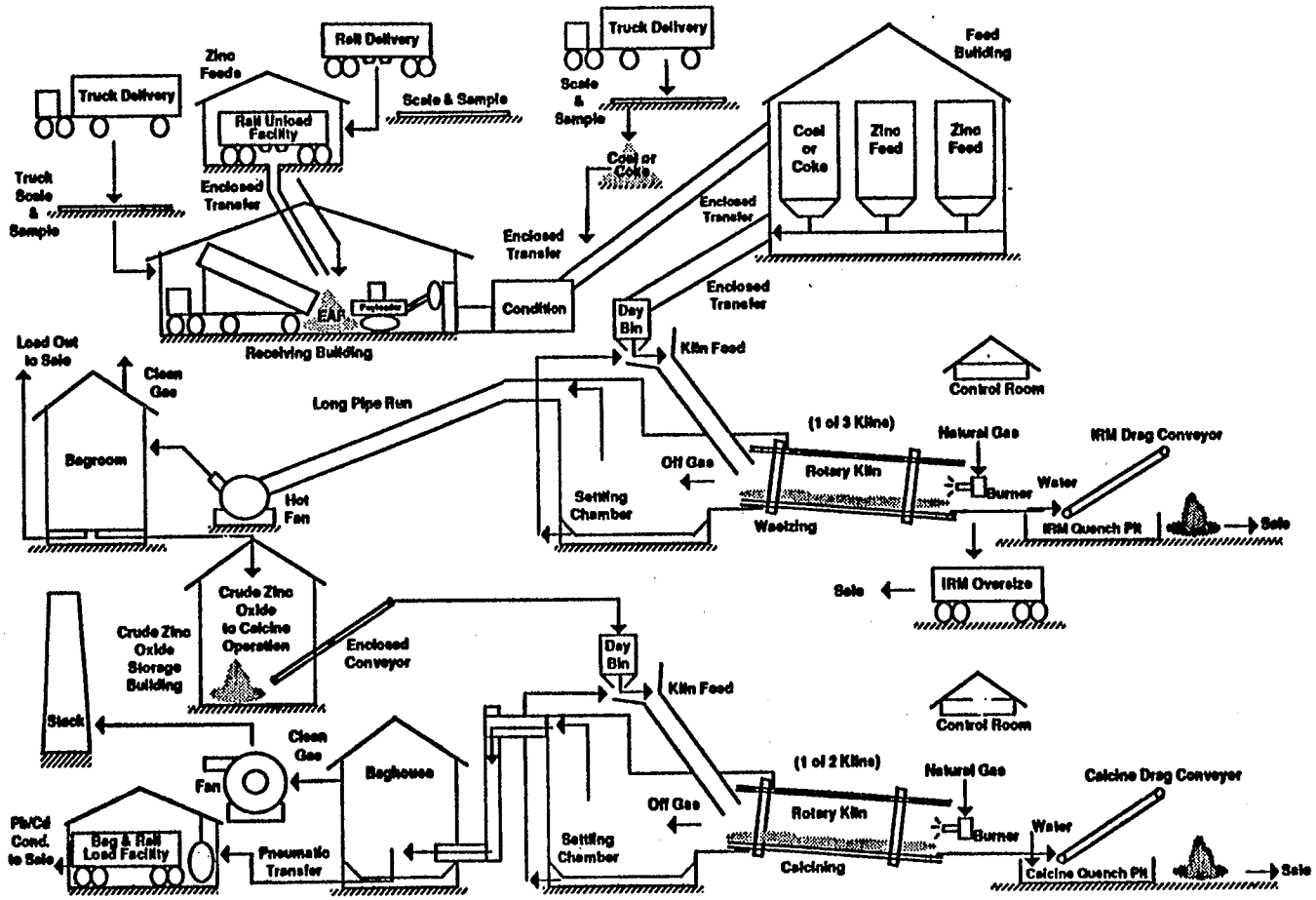

Source: Horsehead Development Company, Inc.

Figure 6.6 - Detailed Schematic Process Flow Diagram, Chicago, IL Facility (Waelz kiln only)

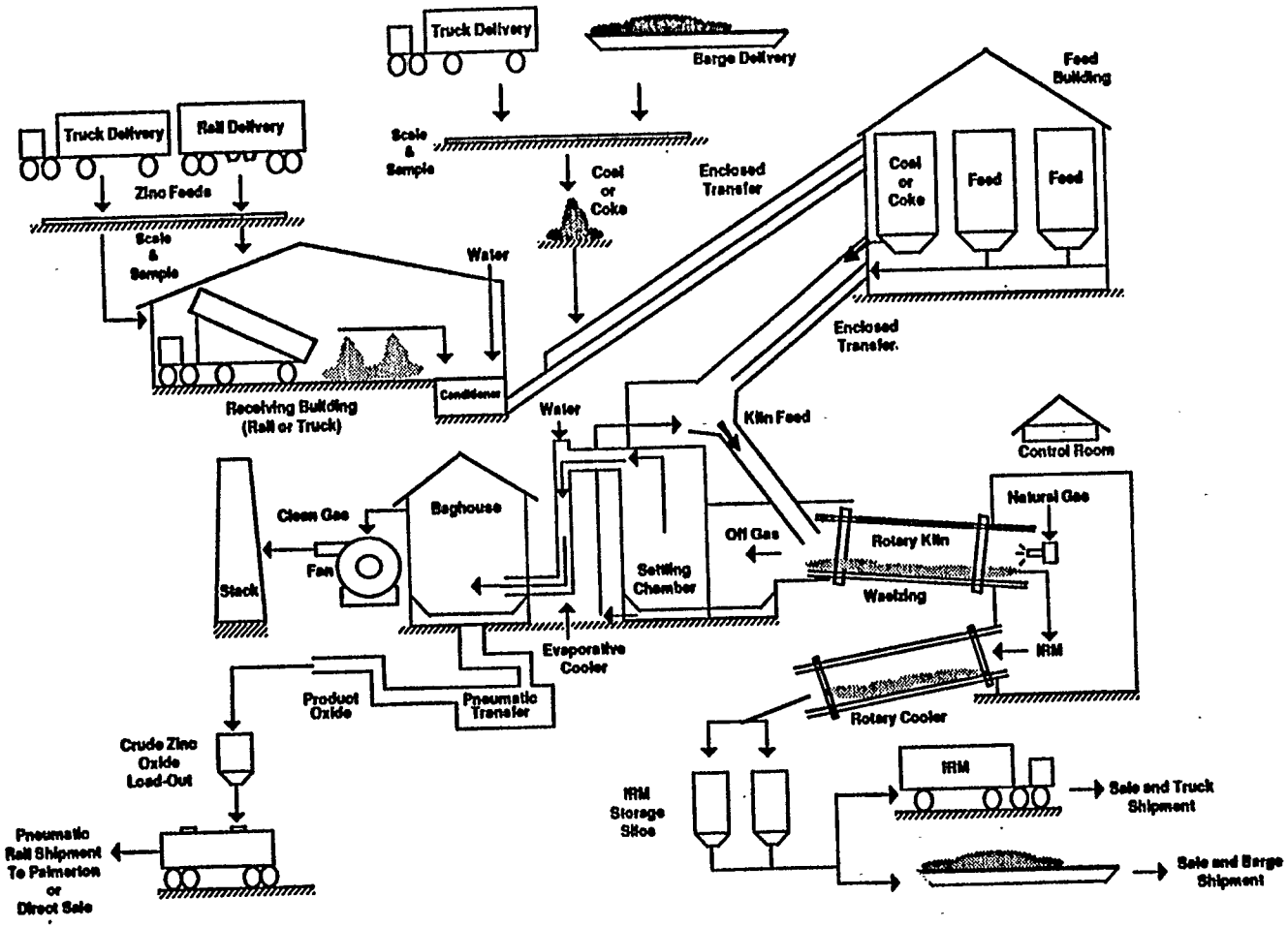

Source: Horsehead Development Company, Inc.

At the ZCA-HRD joint venture operation in Bartlesville, Oklahoma the lead concentrate is processed through a largely hydrometallurgical recovery circuit. Outputs from this operation include more concentrated lead concentrate, copper sponge, cadmium sponge, and zinc oxide. Generally, these materials are sent to primary smelters. It should be noted that the continued viability of cadmium recycling is dependent on the price of cadmium, which is currently very low.

As mentioned previously, HRD has been developing a technology at its Monaca, Pennsylvania research and development facility that can be used to recover various metals from wastes and that can be used to replace the Waelz kiln step in the EAF dust recovery sequence. HRD completed construction of its first full-scale flame reactor at a North Star Steel EAF mill in Beaumont, Texas in early 1993. The facility began reclaiming EAF dust from the North Star Steel mill and other local mills in June of 1993.

Figure 6.7 illustrates the flame reactor process. The flame reactor itself is a water-cooled vertical reactor approximately 15 feet in height with an internal diameter of 22 inches. The reactor consists of a burner section at the top and a reactor section at the bottom. Fuels, which may consist of natural gas or dry, pulverized coke or coal are injected into the burner section with oxygen-rich air. This mixture is ignited, and burns at approximately 2,000 °C, producing a gas rich in carbon monoxide. This reducing gas is fed down into the reactor section, where EAF dusts (or other wastes) are injected from storage bins. Certain metals in the waste feed are selectively reduced and volatilized, and exit the reactor in the offgas. The metals are subsequently oxidized and collected as a particulate material that is similar to the crude zinc oxide (CZO) produced in Waelz kilns.

This material is shipped from the Beaumont facility to Palmerton for calcining with the CZO from the other HRD facilities. A slag is produced in the flame reactor, which after cooling, is similar in chemical make up to the iron rich material (IRM) produced in a Waelz kiln. Flame reactor IRM is more vitrified, less porous, and has less compressive strength than Waelz kiln IRM. HRD plans to market the flame reactor IRM for the same uses as Waelz kiln IRM.

Regulatory Issues and Analysis

In discussions with the Agency and, as a member of the Metals Recovery Coalition providing information on metal recovery to the Agency,[134] HRD has described the RCRA hazardous waste regulations as having a mixed effect on HRD's metal recovery operations. In some ways, RCRA regulations have greatly increased the amount of EAF dust that HRD recycles. Notably, the listing of EAF dust as a hazardous waste, which requires treatment or disposal at a hazardous waste facility, and the identification of high-temperature metal recovery as the required treatment technology for high-zinc EAF dust have driven recycling.

Figure 6.7 - Process Flow Diagram, Flame Reactor

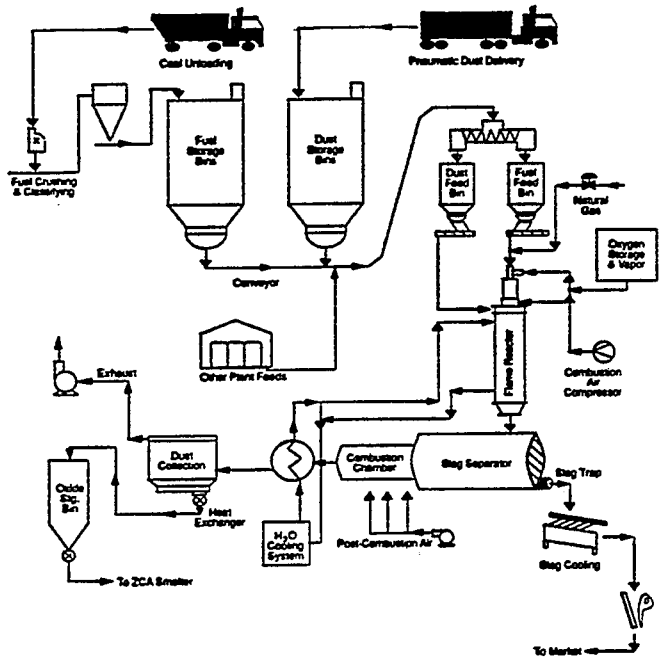

Source: <u>Horsehead Resources Development, EAF Recycling Stalwart Expands Within and Beyond its Core Business</u>, EI Digest, Environmental Information Ltd., May 1991.

However, HRD believes that many of the substantive requirements of RCRA applicable to recovery operations pose great disincentives to recovering metals. HRD identified the following five regulatory disincentives to metal recovery as the most detrimental to their business:

- Derived-from rule;
- Uncertain regulatory status of partially-reclaimed products;
- Part B storage permit;
- Lack of consistency in state implementation of RCRA regulations; and
- Potential inclusion of metal recovery process conditions in permit.

Each of these disincentives is discussed below. In addition, HRD identified as a another disincentive the inconsistent (less restrictive) application of RCRA regulations to other uses of EAF dust such as use in fertilizer[135] or use in a glassified material that is used to make roofing shingles, abrasive blast, glass ceramic, or ceramic glazes.[136]

Derived-From Rule

Under the RCRA regulations the derived-from rule stipulates that any solid waste generated from the treatment, storage, or disposal of a listed hazardous waste continues to be identified as that listed hazardous waste, unless the material is delisted (a case-by-case determination made by the Agency in response to a petition submitted by the facility to exclude the material from being a hazardous waste[137]). Wastes that are identified as hazardous under the derived-from rule may or may not exhibit any characteristics of hazardous waste, and may contain hazardous constituents at any levels ranging from 0 to 100 percent. It should be noted, however, that even without the derived-from rule, solid wastes generated in the treatment of other wastes would be regulated as hazardous if they exhibit hazardous waste characteristics.

The derived-from rule applies to any such solid wastes that are to be disposed of, burned for energy recovery (or used to make a fuel), or used in such a way that they are placed on the land (i.e., used in a manner constituting disposal, e.g., used as construction aggregate placed on the land, as anti-skid material placed on roadways, or used to make fertilizer). Generally derived-from hazardous wastes may not be used on the land without a RCRA permit. However, there is an exemption that allows the use of EAF dust-derived fertilizers, and of other waste-derived products if the hazardous constituents have been treated so as to be inseparable by physical means (e.g., in cement or asphalt) and can meet land disposal restrictions levels. However, this exemption, which allows the use of such waste-derived products on the land but does not change their status as hazardous wastes, has been criticized as not practical in that such products that are considered hazardous waste have a "stigma" and thus are difficult to market.

Since the main input to HRD's recovery processes is listed hazardous waste K061, the derived-from rule could be interpreted to be applicable to any materials generated in the recovery process that are disposed of, burned for energy recovery, or used in a manner constituting disposal. Since the iron rich material (IRM) generated in the Waelz kilns (and now also in the flame reactor) is sometimes used in applications involving placement on the land, this issue has been a barrier to metal recovery for HRD in two ways.

First, HRD indicates that lack of certainty and consistency in implementing this rule has caused confusion, unnecessary litigation, and increased management costs. For example, the status of IRM in Pennsylvania was only eventually decided through a state administrative decision (that IRM was a product and not a derived-from waste), but this decision has not been widely agreed upon or accepted by some parties, making the marketing of IRM a very contentious issue. Subsequently, Pennsylvania has modified its hazardous waste regulations and has added new residual waste (non-hazardous waste) regulations. These new Pennsylvania regulations now define IRM as a waste and will subject its management to some controls.

Second, HRD indicates that the derived-from rule, in concert with the legitimacy issue discussed below, creates an "unlevel playing field" for metal recovery companies competing in the marketplace against primary metals producers and other competing product manufacturers. For example, HRD explains that because a primary metal producer has not introduced a listed hazardous waste into the metal production process (they use ores instead), slags from the process that may have the same composition and physical characteristics as metal recovery slags are not derived-from hazardous wastes, and thus would be hazardous waste only if they exhibited hazardous waste characteristics.[138] Thus, primary metal producers may be able to sell slags as unrestricted products to be used on the land while equivalent metal recovery slags would have to be managed as hazardous waste. In addition, primary producers of products placed on the land that metal recovery slags may replace (e.g., aggregate quarries), may be able to market products with higher levels of hazardous constituents than metal recovery slags, while the slags must be managed as hazardous waste.

Partially-Reclaimed Materials

The second disincentive to metal recovery identified by HRD is the uncertain regulatory status of partially-reclaimed materials. Under the RCRA regulations, hazardous wastes that have been partially reclaimed but must be reclaimed further before distinct components are completely recovered continue to be classified as hazardous wastes. In other words, until the reclamation process results in a final product, a hazardous waste being reclaimed remains a waste.[139] HRD indicates that this provision has been a major disincentive to metal recovery in two ways.

First, HRD points out that, starting with ores, materials in primary metal manufacturing are continually purified and refined in numerous operations before the final metal commodity is produced. HRD indicates that as materials become more concentrated in the intermediate manufacturing steps, they become more economically valuable, and are saleable to other primary metals manufacturers. HRD compares their metal recovery operation to a primary manufacturing operation and argues that the materials produced in their various processing steps (e.g., crude zinc oxide, zinc calcine, lead concentrate) are analogous to these economically valuable materials in primary metal manufacturing and thus should be seen as recovered products rather than wastes.

Again, HRD indicates that potential classification of these materials as hazardous wastes favors the primary industry because recovery facilities must handle as hazardous waste (permits, recordkeeping, etc.) materials that are similar, if not more valuable than, those handled as unrestricted products by the primary industry.

HRD is also concerned that in addition to the substantive disincentives this provision causes, in their case uncertainty and disagreement about implementation of this provision has caused conflicts over the scope of regulated activities, unnecessary litigation, long delays in permitting, and conflicting interpretations by different states concerning the same materials.

Part B Storage Permit

The third regulatory disincentive to metal recovery identified by HRD is the RCRA Part B storage permit. Currently under RCRA, except for boilers and industrial furnaces, recycling processes are generally exempt from permitting (i.e., the unit in which recycling occurs is exempt, but units in which materials are stored prior to recycling are regulated). In addition, industrial furnaces in which only material recovery (i.e., not energy recovery) occurs are exempt from the boiler and industrial furnace (BIF) permitting requirements. As such, HRD's metal recovery units are exempt from permitting. However, in Pennsylvania (Palmerton facility) the receiving building in which EAF dust is first received is considered a storage unit, and storage prior to recycling does require a permit. Thus, the Palmerton facility has operated under interim status for storage and is now moving toward a final permit.

HRD identifies the storage permit as a disincentive to recovery for several reasons. First, HRD argues that the cost of permitting is prohibitive, estimating that they have spent $890,000 for the permit application, related legal expenses, and other related engineering and studies at Palmerton. Second, HRD claims that the time delays in obtaining a permit and then modifying it each time a change is made to facility operations restricts the company's ability to make technological advances for increased quality and decreased costs. For example, HRD claims that because design details for the receiving building are included in the permit application (and will be in the permit), they can not make improvements to the building that would be beneficial to the environment without adding to the permit delay by making changes to the application.

Inconsistent State Implementation

The fourth disincentive to metal recovery identified by HRD is lack of consistency in state implementation of RCRA regulations. HRD explains that in their experience, similar operations located in different states have had widely varying requirements imposed by the different state agencies under the states' RCRA hazardous waste program. HRD indicates that this kind of inconsistency makes regulatory costs unpredictable, which inhibits investment and thus metal recovery.

In addition, a great deal of time and money is spent identifying the regulatory requirements applicable from one location to another. HRD believes that this issue is of particular concern for metal recovery because operations are likely to be located in various parts of the country due to the widespread nature of the generation of input materials and the multi-step nature of the recovery process. HRD would prefer clear and unambiguous federal standards which are preemptive of the states on the basis that commerce must be regulated consistently across the United States.

Permit/Regulatory Control of Recovery Process

The fifth regulatory disincentive to metal recovery identified by HRD is partially a prospective concern caused by promulgation of new regulations governing waste management in Pennsylvania, and partially a concern that similar changes may be made in the future to the federal hazardous waste regulations. Although it is not possible at this time to ascertain specifically how the new regulations will affect HRD's Pennsylvania facilities, HRD is concerned that the new rules will result in permits for and regulatory control over the recovery process itself (e.g., the operating conditions of the Waelz and calcining kilns).

HRD indicates that changes in operating practices and technology are constantly made in any manufacturing operation to improve product quality, productivity, environmental quality, and competitiveness and that these changes must similarly be made in recovery processes. HRD argues that any regulatory control imposed on the recovery process itself will slow or halt routine changes necessary for proper operation and maintenance of the process, in addition to stifling innovative changes that could improve the process over time.

HRD cites the example of the Palmerton receiving building permit application that includes detailed engineering specifications for the existing structure (to be included in the permit). In order to make any improvements to the building, HRD would have to go through a permit modification, which HRD believes is a burdensome and time consuming process.

As an alternative approach, HRD points to its experience at the Chicago facility in Illinois and the Rockwood facility in Tennessee, where HRD believes the regulatory agencies have imposed very strict limits on emissions from the plants through air permits, but have not imposed RCRA permits specifying how any of the facilities' operations are to be conducted. HRD believes that not having to go through permit modifications has allowed them to rapidly apply new and improved containment technology which has benefited both HRD and the state through improved competitiveness and reduced emissions.

It should be noted that while these regulatory disincentives may discourage recovery of metals, the purpose of the RCRA hazardous waste controls is to protect against the risks posed to human health and the environment from management of materials that may leach toxic constituents or pose other hazards. Wastes, from which metals that are also hazardous constituents are recovered (e.g., lead), by necessity have relatively high concentrations of these hazardous-constituent metals (and may pose other hazards). Through the numerous steps of a recovery process intermediate materials tend to be more and more concentrated in these metals, while at the same time becoming more and more valuable as commodities. Thus, balancing the need for regulatory control against regulatory disincentives for recovery is not an easy task.

RCRA Regulatory Incentives to Metal Recovery

As a counterpoint to these regulatory disincentives, HRD also points out that a great deal of their business has been created by RCRA regulations. Although HRD began recycling EAF dust before it was listed as a hazardous waste, HRD acknowledges that even though the price of zinc was relatively high at the time, before EAF dust was listed as hazardous waste HRD's market was limited to local steel mills from which transportation costs were low. After the listing, EAF dust generators had only the options of hazardous waste landfill or hazardous waste recycling. HRD indicates that landfilling was in some cases less expensive, and thus that its customers were generally those companies that felt that recycling was environmentally a better alternative.

In addition, in August of 1991, an Environmental Protection Agency RCRA regulation went into effect tightening the 1988 treatment standard for EAF dust, or hazardous waste K061, containing greater than 15 percent zinc. Specifically, this regulation required that high-zinc EAF dust be treated to levels based on High Temperature Metal Recovery (HTMR). HRD's Waelzing and calcining process was identified as an HTMR technology, as was HRD's flame reactor technology. HRD was one of only a few companies in the U.S. offering HTMR at the time, and was the only company in the U.S. with significant existing treatment capacity. This was primarily due to the concurrent depletion of a mine which had been the primary source of material for HRD's Waelz kiln refining process. Since it became known that this requirement would go into effect, HRD greatly increased its capacity to reclaim EAF dust by adding new kilns in Chicago, Rockwood, and Palmerton, and by commercializing the flame reactor and opening the first plant in Beaumont. Once HTMR was required for high zinc EAF dust in 1988, HRD's existing business almost doubled.

Conclusion

Like other case studies, RCRA Subtitle C regulation has had a mixed impact on HRD to recover metals from hazardous wastes. While EAF dust recovery rates in the United States remain relatively high, evaluating RCRA Subtitle C regulation to encourage environmentally protective metal recovery remains an Agency priority.

6.5 East Penn Manufacturing Company, Inc.[140]

East Penn Manufacturing Company, Inc. (EPMC) in Lyon Station, Pennsylvania, manufactures over 200 types of automotive and industrial lead-acid batteries under the Deka label. EPMC also produces a number of battery accessories such as battery cables, booster cables, spark plug wires, and battery trays. EPMC receives spent lead-acid batteries back from customers and recovers the lead, acid, and plastic battery casings for use in their manufacturing process.

EPMC was selected for a case study for several reasons. First, EPMC is primarily a manufacturing company; their main focus is on producing quality products for their customers. Recycling is an important part of EPMC's business, but they recover only materials that are produced in and/or utilized in their core manufacturing operations. Second, EPMC provides an example of the role that recycling can play in product stewardship. Besides materials produced in EPMC's own manufacturing processes, all of the materials that EPMC recycles are spent products returned from their customers after use. Third, EPMC recycles spent lead acid batteries, a hazardous waste that is exempt from RCRA hazardous waste regulations throughout the waste management cycle until the batteries reach the recycling facility. In addition, EPMC's recycling activities illustrate in part how the market value of a recycled material may influence the recycling rate. Specifically, the national recycling rate for lead acid batteries in 1990 was approximately 98 percent.[141]

History

EPMC began as a small family owned company in rural Pennsylvania in 1946. The company began manufacturing lead-acid batteries to meet a shortage of batteries that occurred after the end of World War II as part of a large increase in automobile manufacturing and use. EPMC, which has grown steadily since 1946, is owned and directed by one of the original founders. The company's operations now consist of one industrial and three automotive battery manufacturing plants, cable and wire manufacturing plants, and numerous support services including research and development, storage and distribution, a large self-maintained truck fleet, and maintenance and machine shops. The company's manufacturing and support operations have been at the same location in eastern Pennsylvania since 1946. The site was originally a Civil War era iron oxide mine. EPMC also has 26 storage and distribution centers located throughout the eastern United States.

In 1992 EPMC's sales were 250 million dollars. EPMC is now one of the six largest U.S. manufacturers of lead-acid batteries in the country,[142] producing five and a half million automotive and custom industrial batteries in 1992. The U.S. lead-acid battery market is predominantly supplied by domestic manufacturers.[143]

EPMC first began smelting spent (used) lead-acid batteries, off-specification batteries, and manufacturing scrap to recover the lead for use in their manufacturing process several years after the founding of the company. The first smelter was a very small furnace, which has been replaced several times by larger and more modern equipment. In the late 1970s a cupula blast furnace was installed, and in the late 1980s a reverberatory furnace was added to increase capacity and treat materials prior to the blast furnace. To illustrate how EPMC's lead recovery activities have grown, while approximately 24,000 tons of lead were recovered in 1980, EPMC estimates it will recover approximately 60,000 tons of lead in 1993.

Process Description

EPMC annually receives approximately four and a half million spent lead-acid batteries back from customers and processes them to recover lead, sulfuric acid, and polypropylene chips. The lead and sulfuric acid are used at EPMC to produce new batteries. The polypropylene chips are sent off-site to one of EPMC's battery casing suppliers who uses the chips to make feedstock for the manufacture of polypropylene products, including battery casings. Figure 6.8 presents a simplified flow diagram of EPMC's recovery processes.

Spent lead-acid batteries are returned to EPMC in a reverse distribution system -- spent batteries are returned after they are replaced through the same distribution chain new batteries are delivered. The majority of spent batteries are brought to EPMC on company trucks from the distribution centers, distributors, and battery users to which the trucks deliver new batteries. The returned batteries may be of any brand, since customers may be replacing and returning any brand of battery.

Spent batteries, which generally do contain the acid electrolyte, are stored outside on pallets near the smelter prior to being fed into the recovery process. Under an agreement with the Pennsylvania Department of Environmental Resources, no broken or damaged batteries may be stored in this outdoor area. Automotive batteries are loaded onto a conveyor that feeds them to a slow-speed saw. The tops of the batteries are sawed off, and the acid is drained and piped to EPMC's patented acid refining process. Impurities such as iron are removed from the acid, which can then be used to replace sulfuric acid that EPMC would otherwise have to purchase. By reusing the acid, EPMC also avoids the cost of acid neutralization and treatment. The plastic tops and casings are sent to EPMC's plastic recovery plant, where the plastic is crushed and washed to remove any entrained lead oxide and metallic lead pieces.

The remaining portions of the batteries, which consist of lead oxide paste and metallic lead grids and posts, are known as lead groups. The groups are fed into a material storage building where they are stored in a pile and moved around with a front end loader. Lead cleaned from the casings at the plastic recovery plant, off-specification batteries from EPMC's quality control checks, and lead plant scrap from EPMC's manufacturing operations are also fed into the material storage building.

The building is approximately 100 feet long and 80 feet wide, and is completely enclosed. Constructed in 1983, the floor consists of ten-inch thick concrete covered with a poured, acid-resistant asphaltic membrane, and a layer of acid resistant brick. A supply of approximately 700 tons of lead groups is maintained in the building, which is enough to feed the smelter for five days.

In the storage building the lead groups are loaded into a hopper that feeds a reverberatory furnace. This oxidizing furnace is fueled with propane and operates at temperatures exceeding 2,000 °F. A relatively pure lead bullion is tapped from the reverberatory furnace and sent to large wet-chemistry refining kettles where additional copper, nickel, and tellurium are removed from the lead as a dross. The remaining lead, known as soft lead, is molded and cooled, and sent to EPMC's lead-oxide department. There the soft lead is used to produce a fine lead-oxide, which is then made into paste that is used to coat metallic lead grids to make battery plates.

Slag produced in the reverberatory furnace is fed with coke and fluxes into the reducing blast furnace which operates at temperatures exceeding 2,000 °F. A hard lead alloy containing antimony, arsenic, and tin is tapped from the blast furnace and sent to large kettles where the balance of the lead alloy is adjusted to produce hard lead, or antimonial lead, in varying specifications. A dross generated in this process consists largely of metallic oxides and sulfides and is high enough in lead content to be returned to one of the furnaces, depending on the composition. The antimonial lead is molded, cooled, and then sent to EPMC's casting department where the lead grids used to make battery plates and other battery parts are cast.

Slag and matte (a sulfide mixture) generated in the blast furnace are recharged to the blast furnace in a batch operation run under different conditions in which additional hard lead and a vitrified slag is produced. The slag generally does not exhibit characteristics of hazardous waste and is disposed of in a non-hazardous industrial landfill. Any slag generated that does exhibit the toxicity characteristic for lead can be disposed of in a Subtitle C landfill (until May of 1994 when the land disposal restrictions will require treatment prior to land disposal).

Figure 6.8 **Process Flow Diagram for East Penn Manufacturing Company, Inc.'s Recycling Operations**

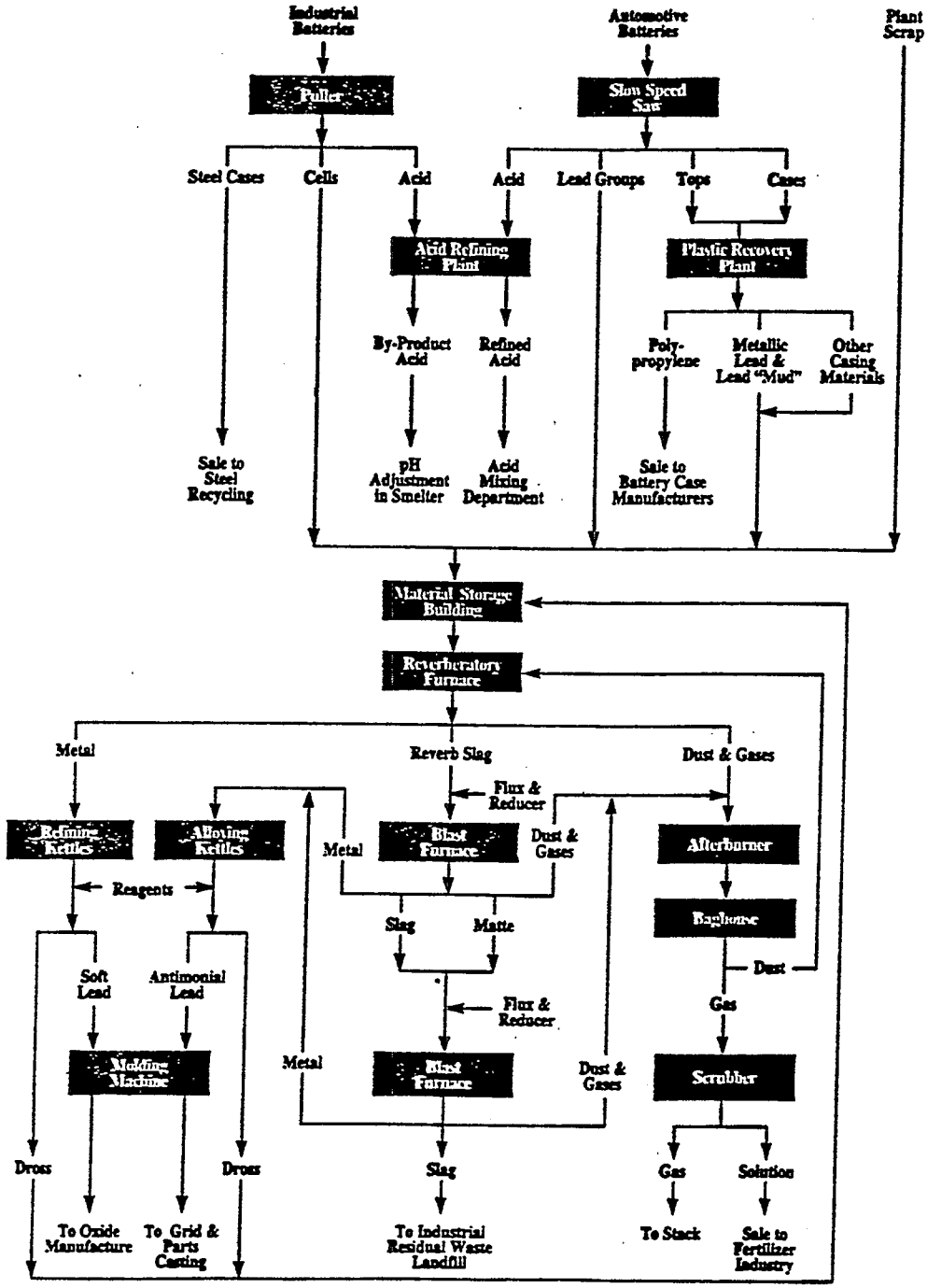

Source: "Secondary Lead Smelting at East Penn Manufacturing Co., Inc.," in Proceedings from the AIME Extraction Processing Division Congress, 1993, ed. John P. Hager, p. 945.

Note to Figure 6.8: There is only one blast furnace at the facility. The furnace is shown twice in the flow diagram to illustrate that slag from the furnace is reintroduced a second time with fluxes and reducers to recover additional metal.

Off-gasses from both of the furnaces are cleaned using an afterburner, a baghouse, and finally a wet scrubber. The dust collected in the baghouse is fed directly back into the reverberatory furnace to recover additional lead. The wet scrubber solution, which is rich in nitrogen, is sold as an ingredient for fertilizers. The concentrations of heavy metals in this solution are significantly below the hazardous waste characteristic levels.

EPMC expects to recover approximately 60,000 tons of lead from lead-acid batteries in 1993. At the current record low price of 18 to 22 cents per pound, EPMC will avoid having to purchase approximately 21.6 million dollars worth of lead from other sources (plus transportation costs). Additional savings are made from the acid and plastic recovery. EPMC also believes that the service they offer their customers, quick and easy removal and proper handling of one battery for each battery sold, increases their share of the battery market. Within some geographic radius, EPMC should be able to recycle batteries at lower cost than other secondary lead smelters due to their use of the reverse distribution system for transportation. In other words, EPMC's trucks would be returning to the plant after deliveries in any case, it costs little more to bring the truck back full of batteries. As there is only one other battery smelter located at a manufacturing site in the country, this would not be true for most other smelters.

Regulatory Issues and Analysis

Partial Exemption for Lead-Acid Batteries That Are to Be Recycled

Lead-acid batteries, which are hazardous under the toxicity characteristic due to the lead content (approximately 52 percent lead by weight), are regulated differently than any other hazardous waste under RCRA Subtitle C. If lead-acid batteries are recycled, only facilities recycling the batteries (e.g., battery crackers and secondary lead smelters) are subject to regulation. A permit is required only for storage of the batteries prior to recycling. Thus, batteries that are to be recycled are not subject to any hazardous waste regulations when they are in the hands of generators, transporters, or intermediate storage facilities.

In the past, if lead-acid batteries were to be disposed of, they were subject to the full panoply of Subtitle C regulations including those for generators, transporters, and treatment, storage and disposal facilities. Since May of 1990, however, under the land disposal restrictions program, thermal recovery of lead in secondary smelters has been specifically required for lead-acid batteries, essentially removing the disposal option for these batteries.

Batteries that are to be recycled were exempted from generator, transporter, and intermediate storage requirements in 1985 for several reasons. First, the recycling rate was already quite high, thus there was already a recycling system in place demonstrating that the batteries were generally not disposed of in the municipal waste stream or abandoned such that they could pose a risk to human health or the environment.

Second, Department of Transportation regulations already covered battery transport. Third, it was believed that batteries were not generally stored for long periods of time, minimizing the risk of the casings cracking and causing a release to the environment. Permitting requirements for recycling facilities were retained because there had been a history of environmental damage from recycling operations at battery crackers and smelters. A number of these older operations were known to have become Superfund sites.[144]

With this background, it should be clear that the batteries EPMC receives back up the product distribution chain are not subject to regulation until they reach EPMC's facility. Thus, customers returning batteries are not subject to hazardous waste generator requirements, interim storage facilities (e.g., retailers, distributors) do not need permits for their battery storage, EPMC's trucks do not have to be hazardous waste transporters, and no manifests are required for battery shipments. EPMC, however, requires a permit for storage of the batteries prior to cracking and resmelting. (It should be noted that under recent changes to the Pennsylvania state regulations, secondary lead smelters handling only lead-acid batteries will in the future not require site-specific permits but will be granted permits-by-rule as long as they comply with specified requirements.)

Lead-acid batteries are somewhat different than many other hazardous wastes because, at least in the past, the economics of recycling have been such that spent batteries have had net economic value. In other words, even including payments to generators to purchase spent batteries, it has been possible to resmelt batteries and both cover the costs of transportation, storage, and smelting and to make some profit on the sale of the recovered lead. This contrasts with the majority of hazardous waste recycling, for which the recycler generally charges the generator a fee for the recycling service (although the fee may be less than the cost of operating the recycling operation due to profits made in the sale of the recovered product). One reason the economics of lead-acid battery recycling work out this way is that batteries are a very concentrated source of the recovered commodity, lead. A typical automotive battery weighs 32 pounds, of which approximately 17 pounds is lead. Thus, much less concentrating is necessary to recover salable product than is generally the case for less concentrated hazardous wastes such as sludges or air pollution control dusts.

As a result of the economics of lead-acid battery recycling, secondary smelters (or collectors further down the distribution chain such as service centers and distributors) have generally paid generators for their spent batteries. For example, EPMC offers customers a discount on a new battery for every spent battery they buy. EPMC believes that the fact that batteries can be returned for a fee ensures, without regulatory controls, that batteries will not be managed improperly (e.g., left by the side of the road or dumped in municipal landfills). The fee provides an incentive for return. The consistently high rate of lead-acid battery recycling over time provides support for this argument (see discussion in Section 5.3.1.1 of this report).

For example, although wastes, including batteries, generated by households (do-it-yourself battery changers) and conditionally exempt small quantity generators are not subject to hazardous waste regulations, for the recycling rate to be as high as 98 percent most of these batteries must be returned for recycling. Thus, even unregulated batteries are generally returned for recycling.[145]

It should be noted that the continuing drop in the price of lead (now around 18 - 22 cents per pound), is threatening to change the economics of lead-acid battery recycling. If the price were to continue to drop, at some point it would become more expensive to transport, store, and smelt spent batteries than to buy virgin lead on the market. EPMC points out that complying with the hazardous waste regulations (e.g., permit applications and modifications, construction of indoor storage, reconstructing the materials storage building to meet containment building requirements) is, along with the price of lead, one of the major variables in the cost of recovering lead from spent batteries and thus has a direct effect on whether batteries are purchased, or generators must pay for recycling. EPMC also notes that due to the current exemption for lead-acid batteries, hazardous waste transporter fees, manifest costs, and costs for permits for interim storage locations are not incurred, and that these costs would have a large effect on the costs of recycling if these things were required. EPMC believes that if the costs of recycling were to increase to the point that recyclers had to charge generators to take their batteries illegal disposal would increase and recycling would decrease.

Battery Storage

Battery storage is an important issue for EPMC. First, batteries (the majority of which are automotive) tend to fail and require replacement when it is either cold or hot. The beginning of winter is the high point in battery replacement; spring is the low point. For East Penn to utilize the full capacity of its smelting operations it must have a constant supply of approximately 20,000 batteries a day. Thus, batteries must stored during times of high generation, to be used in times of low generation. To ensure supply for the smelter, EPMC may store on-site up to 100,000 batteries at one time. EPMC estimates that approximately 4,000 square feet of storage space is necessary to store this quantity of batteries.

For several reasons, EPMC believes that storage at their facility is preferable to the alternative; storage at the numerous locations where batteries are generated (automotive service centers, dismantling centers, etc.). First, storage at the facility assures EPMC that they will have the stocks necessary for a constant feed to the smelter. Second, EPMC's customers do not want batteries stored at their locations due to environmental and safety concerns, as well as the space that would be required. Prompt removal of spent batteries is part of the service that EPMC offers with purchase of its new batteries. Finally, it is environmentally preferable to have the batteries stored at one controlled location rather than at numerous unidentified, uncontrolled locations.

Battery storage is an issue of environmental concern because the electrolyte contained in batteries is not only an acid, but contains lead and other contaminants. In addition, the plastic battery casing is vulnerable to drying and cracking if left in the sun for long periods of time.

EPMC first operated under interim status, and then obtained a final Part B permit for storage from the Pennsylvania Department of Environmental Resources (PADER) in 1988. The permit covers storage of the lead groups in the material storage building after the batteries have been cracked (cut open and dismantled), but does not cover storage of the batteries prior to the cracking operation. Under the RCRA permitting standards, secondary containment would be required for the battery storage area. As part of a consent agreement concerning storm- and waste-water management issues, EPMC has agreed to construct indoor storage for these batteries by the end of 1993. EPMC estimates the cost of constructing the indoor storage to be in excess of one million dollars.

Containment Building Requirements

Under the land disposal restrictions program, which was created by 1984 amendments to the Resource Conservation and Recovery Act, storage of hazardous wastes on the land is prohibited unless the waste has been treated to meet specified treatment standards. Under this program, lead groups (cracked batteries) may not be stored on the land. EPMC's materials storage building has been in the past considered (and permitted as) a waste pile. This is based on the RCRA definition of waste pile, which includes piles of waste whether they are indoors or out. In the 1984 amendments to RCRA, Congress defined land disposal to include waste piles, thus in effect banning the storage of plates and groups in indoor or outdoor piles.

In order to allow the continued storage of lead groups (and other wastes), which due to their weight, volume, and physical form can practically only be stored in piles and moved around by front end loader, EPA created a new regulated unit known as a containment building. To meet the intent of Congress in prohibiting land storage, the regulations governing containment buildings include, in addition to fugitive air emissions controls, secondary containment and leak detection requirements.

As described in the process section above, EPMC's materials management building (i.e., waste pile) has extensive fugitive air emissions controls. The building also includes a foundation and flooring designed to meet stringent performance standards for acid resistance and structural integrity. The air emissions controls are adequate to meet the containment building requirements, but the building does not have secondary containment and leak detection.

In essence, to meet the secondary containment and leak detection requirements for a storage building like EPMC's, there must be a double floor under the building. The bottom floor and space above it would provide containment for and allow detection of any leaks from the top floor. To meet this requirement, EPMC will have to again reconstruct its materials containment building to install a double floor. EPMC estimates that the cost for this reconstruction will be at least $500,000. In addition, EPMC estimates that the permit modification necessary to change its permit to include containment building standards in place of waste pile standards will cost approximately $100,000.

The land disposal requirements are being phased in over time, and the prohibition on storing plates and groups goes into effect on May 8, 1994. Thus, EPMC must have completed the reconstruction by this date. EPMC was granted a two-year variance to continue storing lead groups in the material storage building (a waste pile) to allow it time to complete the reconstruction, however, the variance runs out at the end of 1994, eight months after the effective date for the ban. Thus, EPMC actually has just over a year to complete the construction (including design approvals from the federal EPA, which is implementing this part of the program in Pennsylvania). The permit modification will have to be made with the PADER, prior to construction.

Timing of Requirements Imposed by Different Regulatory Agencies

EPMC's agreement with PADER requires that EPMC construct indoor space for its battery storage by the end of 1993. Under the federal land disposal restrictions program, EPMC is required to reconstruct its materials storage building to meet containment building storage standards by May 8, 1994. EPMC explains that these two activities together represent a huge capital outlay for a company of EPMC's size, and that such situations present large disincentives to recycling, or continuing to recycle. Covering the costs of these two activities within one year will greatly strain EPMC's financial resources, not only in terms of the cost to borrow the money if necessary, but also in displaced improvements to its manufacturing operations which could, eventually, affect its competitiveness in the battery market.

In cases where various regulatory agencies govern different aspects of a recycling operation's activities, EPMC would recommend that the regulatory agencies be sensitive to this concern. If appropriate, the various regulatory agencies could coordinate and institute a planning process to avoid the company being forced to incur a disproportionate amount of regulatory costs during any one year.

Financial Assurance for Closure of Facility

Under the RCRA permit requirements EPMC must provide financial assurance (e.g., insurance, trust fund, bond, letter of credit) sufficient to completely close the facility if, for example, the company were to go out of business. EPMC must include coverage for the cost of sending its maximum storage of batteries off-site for disposal. EPMC believes that coverage for this cost is unnecessary in that lead-acid batteries can generally be sold for recovery and would not be disposed of. EPMC is not allowed to deduct the fees that would be generated from sale of the battery inventory from the closure costs it must provide coverage for.

New State Regulations

PADER has recently promulgated new regulations in Pennsylvania that include regulatory controls for recycling processes (which are currently exempt under federal RCRA regulations and have, in the past, been exempt in Pennsylvania (other than boilers and non-metal recovery industrial furnaces)). However, secondary lead smelters were exempted from these new requirements if they only treat lead-acid batteries. EPMC suggests that without this exemption they might not be able to continue their smelting operations in that the increased costs might make it uneconomical.

EPMC notes that in order to retain this exemption they will not accept any wastes other than lead-acid batteries. EPMC had been considering the possibility of accepting other lead-bearing waste generated nearby, such as lead-containing process residues from the manufacture of lead shielding for picture tubes. (This waste would not be regulated as hazardous waste under the federal regulations in that it would be a characteristic by-product being reclaimed.) EPMC believes that limitations such as this one on the wastes that a facility can accept (regardless of whether the waste is amenable to the facility's recovery process) will increase the cost of recycling, decrease the rate of recycling, and force additional wastes to disposal.

Potential Federal Taxes

Finally, EPMC notes that a 45 cents per pound federal tax on lead produced has been proposed in the U.S. Congress. Given that the price of lead is currently 18 - 22 cents per pound, this would represent a tax of approximately 250 percent. For the 60,000 tons of lead that EPMC expect to produce in 1993, this could amount to $27 million in additional taxes.

EPMC is particularly concerned that if imposed, primary lead producers or importers may be exempted from this tax. This type of tax structure would greatly increase the costs to secondary producers relative to primary producers, and would be a major economic disincentive to lead-acid battery recycling.

Conclusion

This case study demonstrates a number of points. First, as mentioned in Chapter 5, each metal-bearing hazardous waste stream is unique and includes aspects that need to be considered in applying regulations to these wastes. Spent lead-acid batteries are much more closely tied to the price metal commodities (i.e., lead) than other hazardous wastes. Both spent lead-acid batteries and many operations that reclaim them may be more similar to commodities and manufacturing processes than other metal-bearing hazardous wastes. This can change the economics of metal recovery (recall Chapter 5). When metal prices decline, spent lead-acid battery recovery may be much more vulnerable than other types of metal recovery of hazardous waste.

Second, RCRA Subtitle C regulation affects spent lead-acid battery recovery differently than other metal-bearing hazardous wastes. Although similar in that RCRA contains both incentives and disincentives for metal recovery of spent lead-acid batteries, different RCRA Subtitle C regulatory provisions appear to be of greater concern to EPMC. The RCRA Subtitle C regulatory provision of greatest concern to EPMC appear to be containment building standards compared with the derived-from rule which has been a greater concern in other case studies. RCRA Subtitle C regulatory incentives also differ in that the partial exemption for spent lead-acid batteries prior to recovery may be the greatest regulatory incentive for these wastes compared with the Land Disposal Restriction program in other case studies. Finally, the net effect of RCRA Subtitle C regulation on EPMC may be more difficult to assess given that many regulatory costs are prospective. However, if company estimates of capital outlays for retrofitting its containment building are accurate, RCRA Subtitle C regulatory impacts could be substantial.

CHAPTER 7 Assessment of U.S. Balance of Trade And Strategic Metals Issues And Their Relationship To Metals Recovery Of Hazardous Waste

Metal recovery of secondary materials provides a number of important benefits to the United States. Metal recovery from secondary materials can offer a comparative advantage in energy savings over primary mining and mineral processing operations (though it may not do so in every situation). Metal recovery of secondary materials may also result in a lower generation of solid residuals when compared with primary mining and mineral processing operations. EPA has included examples of these benefits in the Inmetco case study in Chapter 6. This Chapter reviews two additional benefits provided by metal recovery of hazardous waste: 1) reduction in U.S. balance of trade deficits for metal commodities, and 2) alternative sources of supplies of strategic metals such as chromium.

As mentioned below, a 1980 GAO report completed in 1980 indicated that substantial quantities of metal values were being lost through the disposal of industrial wastes. The GAO estimate indicates that at least one third of our current balance of trade deficit for metals could be addressed through metal recovery of secondary materials, many of them hazardous wastes. Metal recovery of hazardous wastes may also be an important part of a strategy to minimize U.S. vulnerability to supply disruptions of strategic metals. Preliminary data indicates that land disposed hazardous wastes may contain a substantial quantity of chromium, a strategic metal used as an alloy in steel production.[146]

7.1. U.S. Mineral and Metal Commodity Balance of Trade

In authorizing RCRA, Congress recognized the importance of material recovery as one means of reducing the balance of trade deficit and dependence on foreign sources for materials:

> "The Congress finds with respect to materials, that- 1) millions of tons of recoverable material which could be used are needlessly buried each year; 2) methods are available to separate usable materials from solid waste; and 3) the recovery and conservation of such materials can reduce the dependence of the United States on foreign resources and reduce the deficit in its balance of payments" 42 U.S.C. §6901(c) [RCRA §1002(c)].

Balance of trade is the net flow of goods (i.e., exports minus imports) between one country and other countries. It can be measured as the movement of a single good, a group of goods, or all goods between two countries (e.g., the U.S. and Japan) or as the flow of a specific good (e.g., copper) between the U.S. and all other countries. Considering trade balance from the latter perspective, a country is said to be running a surplus for a specific metal, say copper, when the value of its copper exports are greater than the value of its copper imports. Conversely, when the value of a country's copper imports exceed the value of its copper exports, the country is running a trade deficit for copper.

There are a number of problems with running a trade deficit. First, if the deficit is sufficiently large, the country running the deficit may be vulnerable to supply disruptions from the country running the surplus when the commodity in question is one of critical use and substitutes or alternate sources of supply are limited. An example is the Arab Oil Embargo of 1973. Oil from the Middle East was critical to the U.S. economy and petroleum prices in the United States skyrocketed when the supply of oil from the Middle East was disrupted. When either substitutes for the commodity are readily available or its value to the economy as a whole is minimal, there is little risk of significant economic impact. Trade deficits of metal commodities that are of critical use to the U.S. economy is discussed in Section 7.2 on strategic materials.

There are also some potential problems associated with running a prolonged balance of trade deficit in all goods with the rest of the world, as the United States has done over the last decade. When a country imports a greater value of goods than it exports, it must pay for its trade deficit by either selling assets, drawing down foreign reserves, or by borrowing the needed foreign currencies. All three methods have been used in recent years. Various U.S. assets have been sold to foreign buyers, including many very competitive corporations and large tracts of prime commercial and residential real estate. The profits and benefits generated from those assets are now being transferred to their foreign owners, as the United States continues to finance its trade deficit by selling portions of its wealth.

The U.S. has also financed its trade deficit by borrowing from foreign creditors. Since 1980, the United States has gone from being the world's largest creditor to the world's largest debtor. That is to say, in 1980 the United States was collectively owed more money by the rest of the world than any other nation, while currently it owes more money to the rest of the world than any other nation. The United States has had to pay substantial amounts of interest to its foreign creditors, and this trend will continue for the foreseeable future.

The significant amount of U.S. currency that is owed to foreign creditors makes the United States vulnerable to sudden shifts in demand for the dollar. If foreign creditors decide to shift their holdings to another foreign currency, such as one yielding higher interest rates, then the U.S. must respond by either raising interest rates and risking a recession or by allowing the value of the dollar to fall relative to other foreign currencies, this makes imports still more expensive. Either response would require painful economic adjustments.

Finally, one short term effect of running a sufficiently large balance of trade deficit is a loss of jobs domestically and decreased earnings of the domestic industry.
Any significant reduction in U.S. balance of trade deficit will help to decrease our foreign debt and reduce the need to fund imports with the sale of productive assets or debt instruments.

The balance of trade issue then is really a series of problems stemming from a common source. The first problem mentioned above is excessive reliance on foreign sources of a specific commodity. The term "net import reliance" is generally applied when discussing the balance of trade for a single good. Net import reliance, as the name implies, refers to the level at which a country is dependent on other countries for its supply of a commodity. That is, it is the amount of a commodity that a country must import, minus any exports, and minus the amount of domestic production or stockpiling of the commodity, to meet the manufacturing and consumption needs of the country.

The U.S. presently has a net import reliance of 100 percent for three metals (arsenic, manganese, and columbium (a.k.a niobium)). The U.S. also runs high trade deficits for chromium, cobalt, nickel, platinum group metals (PGMs), tungsten, tantalum, and tin. As mentioned in the next section, the significance of this reliance varies from commodity to commodity.

The second problem stemming from balance of trade deficit is the amount of U.S. currency accumulating in foreign countries. The actual cost of U.S. trade deficits or the U.S. net import reliance for the first and second tier mineral and metal commodities, based on the difference between import and export values for each commodity, is estimated to be approximately $9 billion.[147] This data is summarized in Table 7.1 on the next page. This estimate is based on primary mineral and metal commodities and excludes both imports and exports of manufactured goods containing the metal (manufactures), wrought metals and other forms that are secondary in nature such as pigments and chemicals. The five commodities with the highest net import reliance cost are iron and steel, platinum group metals, nickel, copper, and bauxite and alumina, respectively.

The value of U.S. exports exceeds that of imports for 6 of the 23 minerals included in this report. The U.S.'s most valuable metal export is aluminum; however, the U.S. imports a substantial quantity of alumina and bauxite to produce the aluminum. Aluminum is followed in net value by molybdenum, magnesium, lead, vanadium, and mercury.

U.S. manufacturing industries may be able to make greater use of metal recovery from hazardous waste streams to minimize both problems of overreliance on foreign metals and accumulation of U.S. currency by foreign entities. Although the U.S. does not have large domestic reserves for high net import reliance metal commodities such as chromium, cobalt, nickel and tungsten, there may well be recoverable levels of these metal in hazardous (and nonhazardous) waste streams. Further research would be required to assess the viability of this approach.

Table 7.1 Comparison of Value of U.S. Mineral and Metal Imports and Export 1991[2]

Metal or Mineral[3]	Value of Imports	Value of Exports	Estimated Cost of U.S. Net Import Reliance[4]
1. Iron and Steel	$9,135,492,000	$3,673,404,000	$5,462,088,000
2. Aluminum	$2,268,296,000	$3,356,065,000	(+)$1,087,769,000
3. Platinum	$1,742,866,000	$461,588,000	$1,281,278,000
4. Copper	$1,257,212,000	$306,873,000	$950,339,000
5. Bauxite/Alumina	$1,127,206,000	$417,515,000	$709,691,000
6. Nickel	$1,123,536,000	$91,359,000	$1,032,177,000
7. Zinc	$726,959,000	$281,229,756	$445,729,244
8. Manganese	$614,174,000	$39,397,000	$574,777,000
9. Chromium	$293,860,000	$18,439,000	$275,421,000
10. Cobalt	$181,650,000	$30,683,000	$150,967,000
11. Tin	$163,637,000	$5,455,000	$158,182,000
12. Lead	$74,100,000	$95,141,000	(+)$21,041,000
13. Magnesium	$72,955,000	$129,980,000	(+)$57,025,000
14. Magnesium Compounds	$67,815,000	$58,250,000	$9,565,000
15. Columbium	$46,173,000	$7,007,000	$39,166,000
16. Tantalum	$32,071,000	$27,894,000	$4,177,000
17. Silver	$29,399,000	$8,535,000	$20,864,000
18. Arsenic	$17,219,000	0	$17,219,000
19. Molybdenum	$16,388,000	$136,521,000	(+)$120,133,000
20. Selenium	$15,630,000	$1,939,000	$13,691,000
21. Cadmium	$7,928,000	$218,000	$7,710,000
22. Vanadium	$6,310,000	$17,755,000	(+)$11,445,000
23. Mercury	$301,000	$3,144,000	(+)$2,843,000
Total	$19,021,177,000	$9,168,391,756	$9,852,785,244

[2] Manufactured and secondary materials are not included.

[3] Metal and mineral estimates have the following exclusions. Iron and steel includes steel mill products and pig iron. Aluminum estimates include crude and semicrude; excludes manufactured materials. Copper estimates include semimanufactures and unmanufactures, but not scrap. The value of bauxite and alumina imports listed does not include the value of crude and dried bauxite which accounts for 11,793,000 metric tons of total quantity. Estimates for the value of this material were not available. Nickel estimates excludes secondary and wrought products. Manganese estimates exclude chemicals. Chromium estimates exclude chemicals and pigments and preparation-based chromium. Cobalt estimates exclude wrought metals. Tin estimates exclude manufactures, tin plate and tin plate scrap. Lead estimates exclude pigments and compounds. Magnesium estimates exclude waste and scrap. Silver estimates exclude bullion (refined) and waste and scrap. Arsenic estimates include arsenic metal and trioxide. Molybdenum estimates excludes wrought material and wire. Vanadium estimates exclude vanadium-bearing materials.

[4] (+) indicates that there is a trade surplus for the commodity.

Metal recovery of hazardous wastes may also alleviate a substantial portion of the balance of trade deficit for metal commodities. Previous studies indicate that substantial quantities of metals are available in industrial wastes (hazardous and non-hazardous). In 1980, the General Accounting Office (GAO) reported that approximately 10 million tons of minerals with a market value of $3 billion (1980 dollars) were lost in industrial waste streams[148], mostly copper, iron and aluminum with smaller quantities of zinc, chromium, tin, lead, manganese and nickel. This represents about a third of the U.S. total balance of trade deficit attributable to metals.

Copper, iron, lead, and zinc tend to be the highest concentration metals found in hazardous waste streams. Often these metals are recovered through various pyrometallurgical processes. However, most metal-bearing hazardous waste streams will also contain significant concentrations of one or more of the following: arsenic, cadmium, chromium, magnesium, manganese, and nickel. According to some studies, these metals only need to be present at concentrations of 1 percent to make recovery economically feasible from slags, and recovery of much lower concentrations are technically and economically feasible from more dilute wastes such as plating waste effluent.[149]

Given the dramatic change in the manufacturing sector from high volume applications of metals to more refined, high technology applications, such as composites and specialty alloys, recovery and use of metals from metal-bearing waste streams is an increasingly realistic possibility and should be considered as a potential metal supply.

Currently, data limitations on characterizing metal-bearing hazardous wastes represent a significant barrier to providing technical assistance to industry about metal recovery alternatives. Significant quantities of metal-bearing secondary materials such as characteristic sludges and by-products being reclaimed are not subject to reporting requirements that would allow EPA to analyze their potential in ameliorating the metal trade deficit. The data that has been gathered needs to be validated, updated, and expanded so that it is possible to accurately match waste streams with available recovery technologies and provide technical assistance to generators of metal-bearing waste streams to assist these generators in identifying recovery alternatives.

Further research also needs to be pursued regarding the actual level of metals presently recovered from the metal-bearing hazardous waste streams. Reliable and consistent data on the quantities of metal-bearing waste streams that are sent to recovery versus treatment and disposal are sparse. The availability of this information would afford a better idea and increased confidence of the availability of recovered metals and would assist in expanding recovery technologies as alternatives to treating and disposing metal-bearing wastes.

In spite these data limitations, it appears on the basis of available information that metal recovery of hazardous wastes can play a useful role in maintaining the health and competitiveness of the U.S. economy.

7.2 Strategic Metals

In May 1985, the Congressional Office of Technology Assessment (OTA) issued a report entitled Strategic Materials: Technologies to Reduce U.S. Import Vulnerability. A strategic material is defined by OTA as:

> "[a material] for which the quantity required for essential civilian and military uses exceeds the reasonably secure domestic and foreign supplies, and for which acceptable substitutes are not available within a reasonable period of time."[150]

Therefore, a strategic material is defined by both the critical nature of its use and the vulnerability of its supply. This report identified four strategic metals (chromium, cobalt, manganese, and platinum group metals) as critical to the U.S. industrial sector, based on each metal's importance to U.S. manufacturing industries, the level of domestic production, and the potential for disruptions in the supply of each metal to U.S. markets. These four metals will be referred to herein as "first tier" metals.

Currently, there is little or no domestic production of these metals and production during the period covered by the OTA report was centered in the Soviet Union, South Africa, and Zaire. Chromium, cobalt, manganese, and platinum are essential in the production of high-temperature alloys, steel and stainless steel, industrial and automotive catalysts, electronics, and various other applications critical to the U.S. economy and national defense.

The OTA report also identified eight "second tier" metals that are critical to U.S. manufacturing but are not as open to import vulnerability as first tier metals. These include bauxite/alumina, beryllium, columbium, futile, tantalum, tin, titanium sponge and vanadium. Data for these metals will be presented where available, but only the first tier metals will be discussed in detail.

The OTA report identified potential approaches to decreasing import vulnerability for first tier metals. These approaches are centered on increasing the diversity of supply of strategic metals through the development of promising deposits throughout the world; decreasing the demand for strategic metals through improved manufacturing and recycling; and identifying and testing substitutes and new materials that could replace strategic metals in one or more of their primary uses. For a detailed discussion of these alternatives refer to the original OTA report.

Reclamation of the first tier metals from metal-bearing hazardous waste streams is a possibility and chromium and platinum group metals are routinely recovered from certain waste streams. However, treatment and disposal of metal-bearing waste streams is still the norm despite the high value of many of these metals and the potential for supply disruptions. Recovery opportunities may also exist for certain second tier metals such as beryllium and vanadium.

OTA also suggested that the U.S. establish an economic stockpile of critical metals. A National Defense Stockpile of strategic materials exists, but this is not available to industry when supply is disrupted by international events that do not threaten U.S. national security. The Pentagon is seeking to reduce this stockpile by selling approximately $2 billion of materials; hence, it seems unlikely that government support is available for the creation of an economic stockpile of critical metals. This stockpile is discussed below.

The following section will provide an update of the information contained in the OTA report and discuss to what extent the recommendations of the OTA report have been met through 1) an analysis of U.S. apparent consumption of the metals, 2) U.S. net import reliance for the metals, and 3) a discussion of the National Defense Stockpile, its current status and how it may differ from strategic materials issues generally. Throughout the section, available information on metal-bearing waste streams containing strategic metals and possible opportunities of additional recovery are discussed.

7.2.1 U.S. Apparent Consumption Of Strategic Metals

Apparent consumption is defined as total imports minus exports plus domestic production and increases in the quantity of domestic stocks and inventories. Apparent consumption is a useful indicator of the demand for a given metal by industry. Table 7.2[151] shows U.S. apparent consumption of the metals identified in the OTA report (bauxite, beryllium, chromium, columbium, cobalt, manganese, platinum group metals, rutile, tantalum, tin, titanium sponge, and vanadium).[152] This table shows the average apparent consumption in the U.S. for the periods 1978 to 1982 (the period covered by the OTA report) and 1988 to 1992, as well as the percent change in apparent consumption between those two periods. The averages provide a more accurate picture of U.S. change in consumption than any single-year figures because the averages help to ameliorate single-year anomalies.

As Table 7.2 shows, U.S. apparent consumption decreased for seven of the first and second tier metals since the period covered by the OTA report, and increased for the other six. Apparent consumption for manganese, one of the four first tier metals, has decreased substantially, with a decrease of nearly 50 percent. Chromium consumption has also decreased, although not so substantially. Apparent consumption of cobalt and platinum-group metals, the remaining first tier one metals, has increased 3 percent and 28 percent, respectively. Platinum-group metals showed the largest increase in apparent consumption of the first and second tier metals. The following paragraphs provide explanations for these changes with a discussion of developments in U.S. consumption patterns, use of substitute materials, and recycling.

Table 7.2 U.S. Apparent Consumption of OTA Tier 1 and Tier 2 Metals--Selected Years (Metric Tonnes)

Mineral or Metal	Annual Average Apparent Consumption (1978-1982)	Annual Average Apparent Consumption (1988-1992)	Percent Change
Platinum	79	110	28.0
Rutile	252,015	348,000	27.6
Columbium	3,262	3,425	4.8
Cobalt	7,252	7,522	3.6
Chromium	474,637	447,400	-6.1
Bauxite and Alumina	5,166,600	4,696,800	-10.0
Tin	56,428	49,488	-14.0
Beryllium	245	197	-24.4
Tantalum	550	387	-42.2
Manganese	969,050	649,000	-49.3
Vanadium [1]	7,773	4,129	NA
Titanium [2] Sponge	21,711	20,622	-5.3

[1] 88-92 figure is reported consumption, [2] reported consumption

Chromium

Average apparent consumption of chromium decreased very little during the period. This is most likely due to the fact that, although there exist substitute materials for most uses of chromium, these substitutes are often less desirable. Chromium is used for many highly specialized and sensitive applications. Close substitutes for chromium are generally much more expensive than chromium and result in an inferior product. In other cases, the alternative may have more severe environmental repercussions, such as substituting creosote in wood preserving for chromium-copper-arsenic. There are a few areas, however, where decreases in chromium consumption will be seen and should be pursued to the greatest extent possible. Domestic use of chromium as a corrosion inhibitor may begin to decrease as the military budget is pared and the demand for corrosion resistant pigments for land and air military vehicles decreases.

Stainless steel must contain at least 10.5 percent chromium before it attains its corrosion resistant properties. After this point the chromium content is a function of the desired level of corrosion resistance. Chromium is the least expensive alloying element. Therefore, after the 10.5 percent chromium alloy is attained, other metals such as molybdenum or nickel can be added to stainless steel without diminishing the desired properties of the alloy. However, substituting other metals for chromium in stainless steel can be done only at a higher price. On the other hand, manufacturers of heat exchangers, chemical-storage tanks, reactors, boilers, and other process equipment made from stainless steel are turning to stainless steel alloys that can withstand higher temperatures and pressures. These superaustenetic stainless steels are alloys of nickel, chromium, iron, copper, and molybdenum, and may contain less chromium than conventional stainless steel.

Changes are occurring in the market for chromium in other areas as well that will cause future reductions in apparent consumption. Chrome yellow pigments used in paint and printing inks are facing increased environmental regulation because the toxic heavy metal chromium has the potential to leach from the paint or a landfill and accumulate in water supplies. Hence, various substitutes, such as a pigment blend of organic hansa and inorganic titanium dioxide, are coming into the market. Also, many state regulations have recently gone into effect banning the introduction of, among other things, hexavalent chromium in packaging. In 1989 EPA banned the use of chrome for inhibiting corrosion in comfort cooling towers, (e.g., commercial air conditioners and refrigeration systems). Thus, manufacturers have been forced to turn to substitute materials.

Recycling has decreased chromium consumption to some extent. Secondary chromium is recovered from stainless steel scrap and presently accounts for 26 percent of chromium demand. In 1982, recycling of purchased scrap (primarily prompt and obsolete scrap) accounted for 12 percent of domestic chromium demand. The potential for chromium recovery from metal-bearing hazardous waste streams is the highest of the four first tier metals. Chromium is found in high concentrations in wastes from chromium pigment and iron blue production, electroplating, ferroalloy production, and petroleum refining. Chromium is recovered from these wastes, but available data suggest that many chromium-bearing waste streams are still treated and disposed.

Given the importance of chromium as a corrosion inhibitor and given the fact that chromium is less expensive than other alloying agents, the most effective means of reducing chromium consumption will be 1) removing chromium from pigments when it is not absolutely necessary for corrosion resistance; 2) improving the efficiency of production processes, especially those in the electroplating industry; 3) promoting the use of alloys using a greater mix of metals; and 4) recovering chromium from all potential sources. These practices are clearly underway; however, many chromium-bearing resources, such as metal-bearing hazardous waste streams, remain comparatively underutilized.

Cobalt

Table 7.3 shows a slight increase of approximately 3 percent in cobalt consumption since the 1985 OTA report. Superalloys account for the largest single use, about 40 percent, of cobalt consumption. Superalloys are high performance metals able to withstand high temperatures, high stress, and corrosion. The market for superalloys has been somewhat depressed by the recession of the early 1990s; however, consumption of cobalt in superalloy production has more than tripled since the 1960s.

Rapid increase in the price of cobalt in the early 1980s and again in the early 1990s due to political unrest in Zaire, the world's largest cobalt producer, helped to keep the consumption of cobalt from increasing more. Continued turmoil in Zaire caused many manufacturers to invest in research for identifying cobalt substitutes during the 1980s. During the early 1980s, some substitution did take place in the superalloy market with alternative alloys, such as Inco 718, coming into use.

The largest market for superalloys is jet engines. With the continuing decrease in military budgets, the slowdown in production of commercial airplanes, and the increased use of composite materials in aircraft design, demand for cobalt in the jet engine market should stay at approximately 1992 levels even as the U.S. manufacturing sector recovers from the recession. One report suggests that composite use in civil transport in the year 2000 will have grown from today's 7% to about 25% of structural weight per airplane.[153]

An historically large market for cobalt, accounting for about 10 percent of cobalt consumption, has been the production of cobalt-samarium magnets. Cheaper and stronger neodymium-boron-iron magnets, however, have been developed. Although not as corrosion-resistant as cobalt-samarium magnets, the neodymium-boron-iron magnets have rapidly replaced cobalt-samarium magnets in the production of office and telecommunications equipment.

Recovery of cobalt from secondary sources can play an important role in protecting U.S. industries from potential disruptions in the supply of cobalt. Cobalt can be recovered from a variety of sources, including superalloy production scrap, superalloy scrap (e.g., used jet engine parts and dismantled jet engines), spent petroleum catalysts, homogenous catalysts from the chemical processing industry, and used cemented carbide wear parts and tool inserts. Cobalt from scrap represents approximately 15 to 20 percent of U.S. consumption. Scrap cannot replace all uses of cobalt metals, particularly high-grade metal superalloys. Two metal reclaimers in the U.S. presently process spent petroleum catalysts to recover, among other constituents, cobalt as a mixed cobalt-nickel residue or alloy. Most metallurgical industries in the U.S. have well established cobalt recycling or recovery practices in place.

According to a report prepared by the U.S. Bureau of Mines, economic factors, such as metal prices, costs of scrap collection and processing, will continue to influence whether cobalt-bearing materials are recycled, downgraded, or landfilled. The report also states that other economic and environmental factors, such as the cost of landfilling, were the driving force behind the initiation of metals recovery from spent petroleum catalysts during the past two decades. With environmental regulations becoming even more stringent and treatment and disposal costs rising, this will continue to be a factor.

Manganese

The U.S. average apparent consumption of manganese has declined nearly 50 percent since the 1985 OTA report. This is primarily for two reasons. First, approximately 90 percent of U.S. consumption of manganese is in steelmaking. The recession and international competition have served to lessen demand for American steel. Beyond this, steelmakers have decreased their unit consumption of manganese in steelmaking. That is, for every ton of steel produced, fewer pounds of manganese are required. This increased efficiency, largely the result of such improved techniques as bottom blowing, has decreased unit consumption of manganese in steel manufacturing by almost 25 percent over the past decade.

The amount of manganese used in ferroalloys has also declined as producers shift from ferromanganese to silicomanganese, an alloy with a high percentage of silicone. Silicomanganese is preferred in the production of steel from scrap in electric furnaces because it is less expensive for smaller operations and the metallurgy of the continuous casting process favors silicomanganese. Many of these "mini-mills" have now expanded to where they are competing with the large, integrated steel producers, thereby increasing the demand for silicomanganese and cutting into the market for medium-grade ferromanganese.

In general, it is difficult to find an economically feasible substitute for manganese that does not lead to other problems in the metal product. For example, aluminum could replace manganese in some steel production, decreasing oxygen content in steel, but then the alloying effects of manganese, which bind impurities such as sulfur, are lost. Similarly, titanium, zirconium, vanadium, or columbium could all be used as substitutes for manganese in some capacity. However, the cost per desired effect of such substitution is high, which makes all of these alternatives much less cost effective than manganese.

In another example, the electric power generating industry is interested in almost zero-impurity steel for generator rotors. In this case, the steel must be refined so that sulfur and carbon levels are greatly reduced. This is achieved at a significantly increased cost. When the sulfur and carbon levels are extremely low, however, chromium can be used as a substitute for manganese. Unfortunately, this is simply substituting one first tier strategic metal for another.

According to the U.S. Bureau of Mines, the amount of manganese recovered from scrap is insignificant.[154] Considerable amounts of manganese reenters production as a minor component of steel scrap, steel slag, and nonferrous scrap. Such recycling of manganese does not lead to a progressive buildup in steelmaking. Therefore, although research should proceed pertaining to recovery of manganese, especially from non-traditional sources such as metal-bearing hazardous waste streams, the most promising means of reducing manganese consumption is the continued improvement in steelmaking efficiency.

Manganese is found in certain metal-bearing hazardous waste streams such as zinc smelting process wastewater and titanium chloride reactor slurry. These concentrations are generally low and probably would only contribute marginally to the high volumes necessary for steelmaking.

Platinum Group Metals

Platinum group metals (PGM) are one the two first tier metals for which average apparent consumptions increased between the two periods covered by Table 10. Demand actually exceeded supply of PGMs for most of the late 1980s and early 1990s. Platinum, endowed with strong catalytic qualities, is now used in the manufacture of one in five consumer products.

The primary market for PGMs is catalytic converters. Increasingly strict automobile emission requirements, promulgated as part of the new Clean Air Act, have spurred the development and employment of catalytic converters using platinum group metals as emission catalysts. Palladium, a PGM, has become the metal of choice in new catalytic converter development. Although weakness in the U.S. automobile market may affect PGM demand, this area should be one of strong growth, consuming substantial quantities of PGMs.

As research on catalytic converters continues, improved production efficiency may reduce the amount of PGMs consumed in the production process. However, at present, more platinum is being used in catalytic converters. Research has been conducted to make catalytic converters more efficient, and perhaps less reliant on PGMs, but it appears that no immediate reduction in domestic demand for platinum is forthcoming. Constant demand appears likely since new catalytic converter development, for the most part, has only shifted emphasis from one PGM to another.

Electrical applications are the next largest market for platinum group metals, using PGMs in capacitors and resistors. The petroleum refining industry also uses PGMs in reforming, cracking, and isomerization reactions.

Platinum group metals are presently recovered from certain hazardous waste streams resulting from PGM use as a catalyst in petroleum refining. Because of their high value, PGMs are also routinely recovered from chemical catalysts, automobile catalysts, glass fiber bushings, electronic scrap, laboratory equipment, and other sources. Catalysts and PGM-bearing solutions can be processed to increase their grade for resale. As an increasing number of automobile catalysts and electronics parts are retired, more PGM-bearing waste streams will be available for PGM recovery. In 1991, the U.S. Bureau of Mines released a publication tracing the flow of PGMs through their metallurgical, catalytic, and chemical applications. This document highlighted areas in which significant issues arise involving downgrading, export, or disposal. To exploit recoverable sources and minimize losses of PGMs, the recommendations of this publication should be considered and implemented.[155]

Platinum recovery from hazardous wastes in the United States is currently being encouraged through the precious metal exemption in RCRA Subtitle C regulations (40 CFR Part 266 Subpart F). The provision conditionally exempts precious metal recovery from full Subtitle C regulation while retaining notification and recordkeeping requirements for storage.

7.2.2 U.S. Net Import Reliance of Strategic Metals

Net import reliance as a percent of apparent consumption was an important criterion in OTA's designation of first tier metals in the 1985 report. Net import reliance measures the U.S. balance of trade in metals and the extent to which the U.S. is reliant on other countries for its supply of a given metal. Table 7.3 shows the U.S. net import reliance for metals identified in the OTA report.[156] As Table 7.3 indicates, average U.S. net import reliance decreased for chromium and cobalt between the periods of 1978 to 1982 and 1988 to 1992. Average net import reliance for manganese and platinum group metals increased between these periods. The following discussion addresses the changes that have occurred in world production and U.S. import sources for each first tier metal since the 1985 OTA report was published as well as the political situation in key producer countries that may impact future trade in a given metal.

When the OTA report was published in 1985, the Soviet Union, South Africa, and Zaire accounted for 67 percent of the world's production of chromium, cobalt, manganese, and platinum group metals. In 1991, Russia (USSR), South Africa, and Zaire still produced 64 percent of the world's supply of first tier metals. However, various other countries have begun to increase their output and, more importantly, the U.S. has begun the important process of reducing its reliance on these three countries for its supply of first tier metals.

Since publication of the 1985 OTA report, the U.S. has decreased its average net import reliance on chromium by over 14 percent. During the 1980s the U.S. was able to eliminate its reliance on Soviet (Russian) supplies of chromium and reduce its reliance on supplies from South Africa. Despite these efforts, however, the U.S. must continue diversifying its sources of chromium imports. Decreasing U.S. reliance on unstable supplies of chromium will be difficult given the limited number of countries producing chromium. To the extent it is possible, then, the U.S. must continue investigating chromium substitutes and new sources of recovered chromium.

Table 7.3 U.S. Net Import Reliance for OTA Tier and Tier 2 Metals --Selected Years

Metal	Annual Average Net Import Reliance (1978-1982)[1]	Annual Average Net Import Reliance (1988-1993)	Percent Change
Manganese	98.0	100.0	2.04
Bauxite	94.2	98.2	4.24
Cobalt	93.0	82.0	-11.82
Chromium	90.0	76.8	-14.66
Platinum	87.0	90.4	3.90
Tin	77.4	74.6	-3.61
Tantalum	93.0	86.0	-7.52
Columbium	100.0	100.0	0.00

[1] Expressed as a percent of apparent consumption

U.S. average net import reliance on cobalt decreased by almost 12 percent since publication of the OTA report, and as discussed earlier, consumption of cobalt has also decreased markedly. The U.S. decreased its reliance on Zaire for cobalt imports by 27 percent, due in part to greatly reduced Zairian output, while increasing the share of imports from Canada by 150 percent, from Zambia by 77 percent and from Norway by 57 percent. At present, the demand for cobalt has not revived from the recession and supply of cobalt, while important, isn't as critical as at other times. There is still a large supply of Russian cobalt that has been dumped on the market and the U.S. government is beginning to sell much of the cobalt in the national defense stockpile. Despite these supplies, the situation is critical enough in the primary cobalt-producing countries that the U.S. should work towards a sustained recycling program and further investigation of substitutes in alloying.

The United States is totally reliant on foreign sources of manganese. However, over the past decade the U.S. has radically altered the structure of import sources. Imports of manganese ore from South Africa were eliminated for the 1988-1991 period, reducing U.S. reliance on South Africa for manganese ore and ferromanganese by more than 50 percent since the early 1980s. This is quite significant, considering that South Africa increased their output of manganese between 1981 and 1991.

Perhaps as a result of expectations over the North American Free Trade Agreement, the U.S. increased manganese imports from Mexico by 80 percent. Manganese imports from Brazil also increased by 68 percent and imports from Gabon were up 55 percent. Although U.S. average apparent consumption of manganese has decreased significantly, the decrease in reliance on South African imports and increase in imports from Gabon, France, Mexico and Brazil seem to constitute positive steps toward smoothing potential supply disruptions, and may also contribute to improved relations between the U.S. and its trading partners in the Americas.

Platinum Group Metals represent a somewhat different case than the other three first tier metals. Because of their use as a catalyst in catalytic converters and increasingly stringent air emission regulations applicable to automobiles, PGM apparent consumption and net import reliance have both increased. Further, production of PGMs is almost exclusively centered in South Africa and the former-Soviet Union. At the end of 1992, Russian platinum output was running at 68% the 1991 rate. Recession in South Africa, low metal prices, and labor strife may disrupt PGM production in South Africa.

The U.S. decreased imports from the former-Soviet Union and South Africa by 19 percent and 11 percent, respectively, since publication of the OTA report, while imports from the United Kingdom increased by 45 percent. U.K. production of PGMs, however, is from ores originating in South Africa and Canada.

Given the extreme reliance on PGMs across the U.S. manufacturing sector and the tenuous nature of their supply, the U.S. must work toward fostering the recovery of secondary PGMs, increasing the use of substitutes, and investigating the alteration of production processes so that they are less reliant on PGMs. At present the U.S. accounts for almost 3 percent of world PGM production. The possibility of increasing domestic production and tailoring domestic manufacturing processes to use the PGMs produced domestically should also be investigated further.

The supply situation for chromium, cobalt, manganese, and PGMs has deteriorated since the 1985 OTA report with the deterioration of conditions in South Africa, the former-Soviet Union, and Zaire. Substitute materials are being pursued to reduce reliance on these metals but development is progressing at a slow pace and it may be a long time before such substitutes as composite materials have reached a level of uniformity where they are available for widespread use.

The most obvious track the U.S. should follow, then, to reduce its overall reliance on imported metal supplies is that which decreases demand for the metals. This can be accomplished through applying measures to increase U.S. production efficiency, recycling scrap material and recovering metals from alternative sources such as metal-bearing hazardous waste streams when such sources are available.

7.2.3 National Defense Stockpile

In addition to the basic commercial need for strategic materials to the U.S. economy, these materials have specific application to the Nation's defense. Its importance has declined somewhat with the end of the Cold War. However, conservation of these materials in hazardous and nonhazardous waste streams may be one strategy to ensure our national security in the event that need arises.

Under the Strategic and Critical Materials Stock Piling Act of 1946, the Department of Defense (DOD) has maintained a stockpile of strategic and critical materials to sustain military, industrial and essential civilian needs during a 3-year conventional global war. At the end of 1992, the stockpile contained 99 strategic and critical materials worth approximately $9 billion. This Act was amended by the Defense Authorization Act of 1993 (hereafter referred to as the Act), and DOD is currently in the process of downsizing the stockpile to reflect the changes caused by the dissolution of the Soviet Union, although the value of the stockpile will still contain many metals which have been discussed as candidates for recovery from hazardous waste streams. Increasing our domestic supply of strategic and critical materials, and thus mitigating the reliance on potentially instable import sources, is a major objective of the Act.

The Act defines strategic and critical material to include materials that would be needed to supply the military, industrial, and essential civilian needs of the United States during a national emergency and are not found or produced in the United States in sufficient quantities to meet such needs. A national emergency means a general declaration of emergency with respect to the national defense made by the President or by the Congress.

A 1992 report by the General Accounting Office (GAO) determined that the disposal of six materials from the stockpile could be considered a high risk from a national security perspective based on a sensitivity analysis of the reliability of the source country. These metals were antimony, refractory grade chromite, iridium, palladium, platinum and tungsten. Furthermore, the GAO considered the sensitivity analysis of country reliability to be the most influential factor in yielding high stockpile requirements for a material. Therefore, increasing the domestic supply of all strategic and critical materials would be the most beneficial towards increasing national security.

Section 8 of the Act recognizes the need for increasing the domestic supply of materials, and supports the rationale for the increased recovery of metals from hazardous waste streams. The section states that the President shall make scientific, technological, and economic investigations concerning the development, mining, preparation, treatment, and utilization of ores and other mineral substances that are found in the United States in inadequate quantities or grades, and are strategic material. Such investigations shall be carried out in order to determine and develop new domestic sources of supply of such ores and mineral substances and develop substitutes for such essential ores and mineral products

7.2.4 Conclusion: Strategies To Increase Opportunities For Strategic Metal Recovery From Hazardous Wastes

For the United States to take advantage of additional supplies of strategic metals in hazardous wastes, several steps may be necessary. First, hazardous waste streams that contain recoverable levels of strategic metals should identified. To date, comprehensive analysis has not been completed on which hazardous waste streams contain recoverable levels of strategic metals. Second, technical, economic and regulatory barriers to recovery of these materials must be determined and analyzed to develop strategies to remove these barriers. Third, cost-effective incentives that are environmentally protective would need to be implemented. Generator concerns of compliance cost and long term liability would need to be addressed in the development of these incentives. Finally, end markets for secondary strategic metals would need to be developed and encouraged by the Federal government through procurement, subsidies, grants or other means. The opportunity for strategic metal recovery of hazardous waste may depend largely on the specific metal being recovered.

Chromium recovery has the greatest potential for strategic metal recovery due to its prevalence in hazardous waste streams. And while Inmetco (the case study respondent in Chapter 6) is recovering ferrochrome alloy from chromium-bearing K061, there are probably substantial quantities of other chromium-bearing wastes that are amenable to recovery. Data presented in Chapter 3 indicates that characteristic chromium waste, D007, accounts for over 3 million tons, by far the leading quantity of any single metal-bearing hazardous waste stream. While only a portion D007 contains recoverable levels of chromium, the total mass of recoverable chromium in these wastes may be substantial. Chromium may also be available in plating wastes such as F006, the second largest metal-bearing waste stream identified in Chapter 3. Further research on chromium recovery of hazardous waste is warranted.

As mentioned above, platinum recovery from hazardous waste streams is already being encouraged through the precious metal exemption in RCRA Subtitle C. However, precious metal industry representatives remain concerned that RCRA Subtitle C may be discouraging precious metal recovery by subjecting precious metal recovery operations to hazardous waste manifesting requirements.

Less is known about the potential for cobalt and manganese recovery in hazardous waste streams. Scrap and non-hazardous waste streams may be the most likely source of these metals. Cobalt is believed to exist in recoverable levels in spent petroleum catalysts which may be nonhazardous. As with chromium, additional research may be warranted.

Chapter 8 Encouraging Environmentally Sound Metal Recovery

The second issue Congress asked EPA to study is how metal recovery can be encouraged. The regulated community has provided a series of proposals reviewed above in Chapter 5. The case studies in Chapter 6 provide insight about specific RCRA Subtitle C regulatory provisions that might be modified to facilitate metal recovery in the United States. This Chapter reviews current EPA activities that may encourage environmentally sound metal recovery of hazardous waste including the Hazardous Waste Identification Program and the Definition of Solid Waste Task Force. This Chapter also reviews a series of non-regulatory alternatives such as waste exchanges and incentive-based alternatives to traditional command and control regulation such as pollution taxes and marketable permits.

8.1 Current EPA Activities Encouraging Environmentally Sound Metal Recovery of Hazardous Waste

EPA is currently conducting three activities (one initiative and two rulemakings) that will affect metal recovery of hazardous waste: the Definition of Solid Waste Task Force (Task Force), the proposed Part 273 Special Collection System regulations, the proposed universal treatment standards for metal constituents in hazardous wastes. While none of these activities was established solely to promote metal recovery of hazardous waste, each initiative will play an important role in modifications to Subtitle C regulation affecting metal recovery.

8.1.1 Definition of Solid Waste Task Force

On October 1, 1992, EPA's Office of Solid Waste (OSW) established the Definition of Solid Waste Task Force (Task Force). The Task Force was created to develop a comprehensive strategy to modify Subtitle C regulation to simplify the current regulatory scheme, to reduce disincentives to safe recycling and innovative technologies and to address concerns about increased risk from expanded use of products derived from hazardous wastes.

The Task Force has been established to conduct followup to prior definition of solid waste activities including the RCRA Implementation Study (July 1990), RCRA Forums (November/December 1990) and the RCRA Implementation Study Update (July 1992). Since its inception, the Task Force has conducted important public outreach with various stakeholders on Subtitle C regulatory issues includes industry, environmental groups and state governments.

In completing this outreach, the Task Force has built upon the previous EPA initiative mentioned above through the consideration of options to modify the definition of solid waste in order to encourage environmentally sound recycling. These options have included modifications to RCRA jurisdiction and regulatory requirements over secondary materials, including metal-bearing secondary materials, to better optimize RCRA's dual objective of resource recovery and environmental protection.

One option currently under consideration include establishing a new recycling system that tailors management requirements to the type of recycling, e.g., dividing recycling into categories based on the source of the recyclable materials and the recycling location. In evaluating all of the options, the Task Force has relied on several key operating principles for recycling under RCRA jurisdiction:

- Safe recycling operations use equipment designed to prevent releases of hazardous constituents to the environment, especially groundwater.
- Recyclers must quickly and effectively respond to releases of hazardous constituents that occur despite these prevention measures.
- Government regulators must know the identity of recycling facilities and basic recycling data to enforce compliance with the appropriate management standards.
- An effective regulatory system must assure safe transportation and tracking of secondary materials from "cradle to grave."
- Waste-derived products must pose no more threat to human health and the environment than the virgin products they replace or compete with.
- The community surrounding a recycling facility should be notified if the facility will be receiving and recycling hazardous waste generated at another facility.

8.1.2 Part 273 Special Collection System Regulations

Recently, EPA proposed a rulemaking (58 FR 8102, February 11, 1993) to establish a streamlined set of regulatory requirements for collection of certain hazardous wastes such as batteries and certain recalled pesticides that may be widely distributed in commerce, generated by a large number of users, and problematic in municipal solid waste streams. These proposed requirements known as Part 273 or Special Collection System regulations are designed to facilitate collection of batteries, certain recalled pesticides and possibly other "universal" hazardous wastes to ensure proper management prior to recycling or treatment/disposal. Part 273 would facilitate collection in part by simplifying requirements (such as reduced recordkeeping and reporting requirements) for generators, transporters and owner/operators of interim storage facilities known as "consolidation points"). Part 273 would also facilitate collection through lower compliance costs (e.g., use of a non-hazardous waste hauler for some shipments; operation of a consolidation point without a storage permit).

Although Part 273 was not specifically proposed to encourage metal recovery in particular, when final it may facilitate metal recovery of certain metal-bearing hazardous waste such as hazardous waste batteries and other mercury-containing wastes such as thermostats by removing disincentives to collection and consolidation. For many of these wastes (cadmium-containing batteries, lead-acid batteries, high category mercury containing batteries and mercury-containing thermostats), thermal recovery is already required under the Land Disposal Restriction program. Part 273 would improve the efficiency of collecting these wastes prior to recovery. Potentially, in the future Part 273 could be applied to other metal-bearing hazardous waste streams that may be appropriate for recovery.

8.1.3 Universal Treatment Standards for Metal Hazardous Constituents

On September 14, 1993 (58 FR 48092) EPA has proposed a rulemaking that would establish uniform performance-based treatment standards, called "universal treatment standards" under the Land Disposal Restriction (LDR) program for 14 metals: antimony, arsenic, barium, beryllium, cadmium, chromium, lead, mercury, nickel, selenium, silver, thallium, vanadium and zinc. Currently, metal constituents present in different hazardous wastes may be required to be treated to different levels depending upon what type of hazardous waste the constituent is part of.

For example, cadmium present in D006 nonwastewaters, waste which exhibits the toxicity characteristic for cadmium, must be treated to the characteristic level of 1 ppm prior to being land disposed while cadmium present in F006 nonwastewaters, wastewater treatment sludge from electroplating operations, must be treated to 0.066 ppm prior to land disposal. Under proposed universal treatment standards, cadmium present in either D006 or F006 nonwastewaters would need to be treated to 0.19 ppm prior to land disposal thus simplifying the LDR program. The proposed universal treatment standards would not modify treatment standards where a technology has been specified as the treatment standard for a particular waste stream.

Because the proposed universal treatment standards would be performance-based rather than technology-based, they would not encourage metal recovery of hazardous through mandating recovery. However, the proposed universal treatments standards for 13 of the 14 metal hazardous constituents are based upon either high temperature metal recovery or stabilization (the proposed arsenic standard is based upon slag vitrification). This may be an incentive for generators to chose high temperature metal recovery as a preferred management choice for their waste since this technology is the basis for achieving performance levels required prior to land disposal. It may also preclude generators from using other non-recovery management treatment options than do not meet the levels required by the proposed universal treatment standards.

8.2. Non-regulatory and Incentive-based Approaches To Encouraging Metal Recovery From Hazardous Waste

In addition to traditional regulatory approaches to managing hazardous waste, non-regulatory approaches such as technical or financial assistance and incentive-based approaches may play an important role in facilitating metal recovery of hazardous waste in the United States. EPA has reviewed one non-regulatory approach (waste exchanges) and several incentive-based approaches (pollution taxes/fees, marketable permits/recycling credits, deposit/refund systems, and removal of federal subsidies for primary metals) that have been used in other countries and may have value in facilitating metal recovery in the United States.

8.2.1 Non-regulatory Approaches To Encouraging Metal Recovery From Hazardous Waste/ Waste Exchanges

Historically, non-regulatory approaches such as financial and technical assistance to encouraging metal recovery of hazardous waste have been used by countries such as Japan as a compliment to strict regulation of industry. In 1980, the GAO reported that the Japanese government was providing financial assistance to the private sector to invest in metal recovery equipment.[157] The GAO found that comparatively little such assistance was being provided by the U.S. government to the private sector.

In addition to financial assistance to encourage investment in metal recovery, waste exchanges are another type of non-regulatory alternative designed to encourage metal recovery and reduce disposal of metal-bearing hazardous waste.[158] Waste exchanges are public or private institutions that are dedicated to promoting the reuse and recovery of hazardous and non-hazardous wastes.

The history of waste exchanges dates back to World War II, when waste exchanges were established by the British in 1942. When World War II ended, most exchanges had met their original goals consequently ceased to exist.

In 1972, the concept of promoting transfers of industrial waste was reborn in the Netherlands. This first modern-day exchange was known as the VNCI Waste Exchange. Shortly after the VNCI Waste Exchange began, other European nations began to recognize the environmental benefits of promoting the reuse of industrial wastes and established their own exchanges. From 1972 to 1976, approximately 12 exchanges were established in Europe.

At the same time, other nations outside of Europe also began to focus on programs that helped to protect the Earth's resources. During the early to mid-1970's waste exchanges were set up in New Zealand. The government of Australia in 1977 set up an Industrial Waste Exchange which still operates today as part of the government. The first North American Waste Exchanges were established in 1973.

Waste exchanges in the United States are comparatively new to those in Europe. European waste exchanges successfully exchange about 30 to 40 percent of wastes listed compared with 10 percent for U.S. exchanges. In 1978, Canada established a National Waste Materials Exchange. The GAO reports that the Canadian national waste exchange was relatively successful its first year in operation.

Most of the early waste exchanges served strictly as information exchanges and did not provide for actively pursuing matches of industrial waste generators and users. While some of the early exchanges operated for-profit, most were not-for-profit. The for-profit exchanges tended to deal solely with surplus inventories, while the not-for-profit exchanges dealt surplus inventories, off specification products, and waste products.

Hazardous wastes were included on many of the waste exchanges and, in fact, some exchanges dealt primarily with hazardous wastes. Waste exchanges were generally limited to trades on a regional basis and not on a national basis. Funding for early exchanges came from several sources: government (federal, state and local), private donations, listing fees, and subscription fees.

In recent years, computers and telecommunications technology has greatly facilitated the ease with which waste exchanges can be set up and managed. For instance, a national computerized bulletin board is linking together regional markets. States and municipalities are starting more localized exchanges, and some exchanges are actively seeking wastes and markets for waste as opposed to serving only as informational exchanges, as in the past.

Throughout their history, waste exchanges worldwide have faced similar problems as they attempt to expand and grow. As the waste exchange concept grows and becomes part of the standard business operating procedure, operational problems that exist today (e.g., funding, marketing, liability concerns) will need to be addressed in order for exchanges to succeed.

High purity, steady supply and high disposal costs avoided are primary factors contributing to success of materials successfully matched at waste exchanges. Data from California indicates that solvents, oils and aqueous metal solutions are the materials most commonly recycled off-site. Additional materials that are technically and economically feasible to recycle through waste exchanges include alkalis, acids, metals and metallic compounds and catalysts. Specific data on which metal-bearing hazardous wastes were listed on exchanges has not been available.

Recently, EPA awarded a contract for $350,000 to Pacific Materials Exchange (PME) to develop a computerized National Material Exchange Network (NMEN). NMEN became operational in January 1993. Although it is too early to tell what effect NMEN will have on waste exchanges in the United States, the hope is that greater access to materials and markets on a national basis will improve the probability of matching buyers and sellers of secondary materials. With the help of state and local waste reduction requirements, NMEN facilitated the development of new waste exchanges by reducing start up costs for new exchanges. As of May 1993, 22 exchanges are being developed in 19 states.

Waste exchanges may provide additional opportunities to encourage metal recovery of hazardous wastes. Financial and technical assistance to regional and local waste exchanges could compliment NMEN to encourage metal recovery.

Studying which metal-bearing hazardous wastes are currently amenable to recovery but not being listed at waste exchanges is a another opportunity. The objective of all alternatives would be to facilitate establishing end markets for partially recovered metals from metal recovery operations as well as encouraging generators to manage metal-bearing hazardous waste for recovery.

8.2.2 Incentive-Based Approaches To Encouraging Metal Recovery of Hazardous Wastes

Today, economists and environmental policy analysts speak of a dichotomy between "command and control regulation" and "incentive-based approaches" to environmental protection. This dichotomy is based on how government influences or directs changes in a polluter's behavior.

Command and control regulation is the traditional means that government uses to achieve environmental protection. Command and control regulation directs polluters **how** to reduce or manage pollution as well as prescribing **what level** of pollution is permissible. Command and control regulation is a characterization which includes traditional permitting (non-transferable, location specific); performance, design or technology-based standards, and traditional compliance monitoring/enforcement procedures (e.g., issuance of orders, civil penalties). RCRA Subtitle C is an example of a command and control system. Examples of modifications to command and control regulation include proposed modifications to Subtitle C regulation presented by the regulated community in Chapter 5 and those currently under deliberation by the Definition of Solid Waste Task Force.

Incentive-based approaches rely on market behavior of polluters to achieve a reduction in levels of pollution or to improve pollutant management. Incentive-based approaches usually do not direct a polluter how to reduce pollution. Rather, these approaches set performance levels (based on quantity) or charges (based on price). In contrast to command and control regulation, incentives-based approaches influence rather than dictate the behavior of polluters. Pollution taxes or fees, transferable permits and deposit/refund systems are examples of incentive-based approaches.

Economists have traditionally been critical of command and control approaches to environmental protection, preferring incentive-based approaches instead. They assert that command and control approaches are economically inefficient because they do not take into account the varying cost of reducing pollution from facility to facility. Environmental groups have traditionally favored command and control approaches believing that they provide a greater level of certainty and uniformity than incentive-based approaches and that compliance can be enforced.

The use of incentive-based approaches is gaining in popularity across the globe. According to a review by the Organization of Economic Cooperation and Development (OECD), there are 150 different applications of economic instruments in 14 countries.[159] For example, Green Taxes have been adopted across Europe - though more as a revenue raiser than as a tool for behavior modification.

In the United States, some forms of incentives (such as tradeable permits) have been studied for several years. Through the Clean Air Act Amendments of 1990 and elsewhere, the Agency is expanding the use of incentive-based approaches such as fees, charges and marketable permits. For example, incentive-based approaches are now a major part of EPA's approach to the problem of acid rain. The Clean Air Act Amendments include provisions for the use of tradeable emission allowances to more cost-effectively reduce sulfur dioxide emissions from utility plants that contribute to acid rain.

On a local level, waste management officials in many communities are working to send a stronger market signal directly to consumers of disposal services. Through "unit pricing programs," homeowners and commercial entities are charged a fee per unit (volume or weight) of waste disposed. Generators of waste may then decide (independent of any kind of mandate) whether or not to change their disposal practices, increase their source reduction/re-use behavior or step up their recycling efforts. EPA is evaluating the effectiveness of unit based programs across the country.

This section on incentive-based approaches is presented to provide a full range of alternatives to encourage metal recovery of hazardous wastes. This section includes discussion of several categories of incentive-based programs that could be considered for managing the metals reclamation industry along with questions a policy-maker or analyst would ask in deciding which among them might be most effective. Finally, the chapter concludes with a brief discussion of some of the limitations of an incentive based system and barriers to their acceptance.

EPA is beginning to analyze the use of several types of incentive-based programs that may be relevant to the metals reclamation industry.[160] Typically, these programs fall into four categories:

1. Pollution Charges (Both Fees and Taxes) (Section 8.2.2.1);
2. Tradeable Waste Generation Permits and Recycling Credits (8.2.2.2);
3. Deposit/Refund Programs (8.2.2.3);
4. Removal of Federal Subsidies (those that support the use of virgin products) (8.2.2.4).

Because further evaluation is needed on a case-by-case basis, neither this chapter nor this report endorses any of the incentives described. Rather, this report provides a starting point for discussions with legislators, industry and environmentalists.

8.2.2.1 Pollution Charges (Both Fees and Taxes)[161]

Pollution fees and taxes impose a charge per unit of pollution or per unit of production or activity. Pollution charges tend to be effective when the policy question is how much (as opposed to whether) waste generation is acceptable.[162] Government levies a fee or tax on the inputs or outputs of manufacturing, recycling or reclaiming metals. Pollution charges create an incentive for industry to reduce pollution up to the point where the incremental cost of controlling pollution equals the pollution fee or tax rate.

Two approaches can be used in setting fee or tax levels. First, fees could be set to approximate the harm imposed by pollutants forcing the cost to be paid by the polluter rather than the public. In this approach, industry would determine total waste generation levels. The second approach hybridizes an incentive-based system and a performance-based system. Waste generation targets are calculated using economic and scientific assessments. Via this approach, charges are computed as a tool for reaching those targets.

The effectiveness of a pollution charge is directly tied to: 1) the calculation of the fee or tax rate; and, 2) enforcement and oversight of industry. According to environmental economics, if environmental goals are to be achieved, the policy maker must calculate the "correct" charge. The "correct" charge is that which results in the generation of an "optimal" amount of pollution - the amount of pollution at which the incremental cost of controlling pollution equals the value of damage avoided by reducing pollution.

In order to calculate the correct charge, the policy-maker must know the private costs of pollution control and the costs to society of pollution damages (i.e., the benefits to society of reducing pollution). The cost to society is typically viewed as the cost of health and environmental damage - often very contentious issues. Because private costs of control are heavily guarded and damages occur to essentially public goods (on a local - not a national - level), this is an especially difficult task.

Failure to calculate the "correct" charge and/or provide adequate enforcement can have severe and far-reaching implications. For example, a tax on an inelastic input will yield no reduction in waste generation and only increase regulatory burden. If the charge is too high, industry may employ pollution controls that are excessive and economically inefficient (i.e., environmental control costs exceed their environmental benefit). If the charges are too low, goals for reduced waste generation will not be achieved.

The calculation of pollution charges may ultimately be an iterative process with the charges rising and falling until the "correct" charge is found. This volatility is, perhaps, the most significant obstacle to a successful program. Investments in pollution control may make sense when pollution charges are high but not when charges are low. To industry, it may be optimal to wait for charges to stabilize (itself, distorting the economics by adding bias to the supply and demand curves) before investing in pollution control.

For these reasons, policy-makers generally take a conservative approach in the early stages of a pollution charge system.[163] Adjusting the charge upward over time toward "optimal" levels serves to reduce economic impacts at the early stages of the program (as firms evaluate methods for increased waste reduction) while still encouraging some reductions so as in waste generation. However, it would be important to make future increases predictable to ensure that industry could anticipate the economics of future reductions in waste generation rates.

Pollution charges and taxes give industry two incentives: to reduce waste generation and also the incentive to misrepresent waste generation. This latter distortionary effect is one which adds a significant cost to the system: the costs of enforcement and oversight. Currently, though some of the wastes are captured by RCRA's various reporting requirements, many are not. Though random monitoring of facilities may discourage under-reporting, it does so only at some cost.

Some state governments have tried pollution charges on hazardous waste generation. As mentioned above in Chapter 6 in the U.S. Filter Recovery Services (USFRS) case study, the State of Minnesota has levied a tax on releases tied to the Federal definition under the Emergency Planning and Community Right-To-Know Act (EPCRA). Unfortunately, USFRS reports that the tax creates no distinction between off-site recycling and traditional treatment or disposal. This is likely due to the fact that the Federal definition of release under EPCRA made no such distinction. Recent revisions to Form R used to report EPCRA release now contain additional data elements distinguishing between off-site treatment or disposal and recycling.

In 1985, Noll et. al. reported several variations on state hazardous waste taxes.[164] Some state government structure higher hazardous waste taxes on treatment and disposal than for recovery. Other states provide lower permit application fees for recovery facilities. Noll reports that in 1985 both Kansas and Tennessee had authorized their regulatory agencies to impose a tax based upon risk of the material and the cost of treatment and disposal. Indiana imposed a $1.50 per ton tax on waste disposal but not recovery. The state of Kentucky structured its fee system in a manner that assess hazardous waste fees for on-site treatment and disposal at one-half the fee for off-site treatment and disposal. On-site treatment and recovery is exempt from assessment unless there is landfilling of process residuals.

What is not made clear in the review of state regulations is whether the fees are simply used as revenue sources, or as a mechanism to reduce hazardous waste generation. If it is the latter, the administrative costs of such a system would be greater due to economic adjustments required to set fees at levels to reduce waste generation rates. The review also does not make clear how revenue raised from pollution charges is to be allocated. It may be added to general revenue to reduce any deficit. Alternatively, revenue may be used to subsidize metal recovery operations, research and development grants for innovative technologies or loans for pollution prevention projects.

In summary, if the charge is calculated correctly and if properly administered and enforced, a pollution charge system will yield four significant benefits. First, the incentive system minimizes the aggregate costs of pollution control. Second, pollution fees and taxes give generators continuing incentives to develop and adopt more efficient and effective pollution control technologies. Third, pollution fees and taxes tend to be a comparatively progressive form of taxation - the per entity fraction of tax paid increases in direct proportion to income.[165] Fourth, pollution fees are revenue raisers which will serve to reduce the federal or state deficit (or reduce the need for other, more regressive taxes), albeit for a short time only. Nevertheless, the policy-maker must recognize that the costs of administering and monitoring such a system could place a heavy incremental burden on government.

8.2.2.2 Tradeable Waste Generation Permits and Recycling Credits[166]

Tradeable waste generation permits and recycling credits are collectively referred to as "marketable permits." Tradeable waste generation permits are used when the environmental goal is to minimize waste generation rates and to achieve a national waste generation target. These permits are entitlements to emit or generate specified amounts of a pollutant during a specified time in a specified location. Locations may be defined in terms of facilities, bubbles,[167] ecosystems[168] or nations. Every generator of waste must have a permit in order to operate.

As with traditional command and control regulations (i.e., performance standards), tradeable waste generation permits ration the total amount of pollution that the control authority is willing to allow. Just as when performance standards are applied, those entities with permits can only generate the amounts of pollutants specified in the permits that they own. Unlike performance standards, however, these permits are not entity specific: they can be purchased, sold, leased or bartered across entities. They are freely transferable.

Recycling credits, in contrast, are devices used when the environmental goal is to either maximize recycling of certain waste streams or to realize pre-determined national recycling rates (or content standard). Through the use of recycling credits, entities could do their part to satisfy the environmental goal by either diverting wastes to recyclers (or by using the required percentage of secondary materials) or by purchasing "credits" from other entities which have exceeded their recycling requirements. An entity must achieve a total "use" of secondary materials either in practice or through some combination of waste diversion (or use of secondary materials) and credit purchase. Ultimately, the same amount of recycling should occur as under a uniform standard, but the total costs of compliance are less since those entities best suited for recycling (or using recycled materials) would essentially be paid by other entities to undertake the bulk of the recycling (or recycled material usage) burden.

This transferability of either mechanism provides industry with much more flexibility than traditional command and control regulations.[169] For instance, if the Agency were to develop a marketable permit program, waste generators with low pollution control costs and/or low reformulation costs would have the incentive (assuming the entity is a profit-maximizer) to alter their processes and market their excess waste generation capacity. Less flexible entities would be required to purchase marketable permits in order to continue operating in instances where they exceed their original allotment. Generators who wish to increase their levels of waste generation could also go out on the market and acquire permits for waste generation greater than their individual allotment. Finally, environmental organizations which hope to reduce aggregate generation beyond the government allowance could purchase permits.

Historically, marketable permit schemes have been applied to air and water quality management. More recently the concept of "Debt for Nature" swaps has gained in popularity. In the future, marketable permits may be used to manage waste, phase out the use of certain materials[170] or foster recycling.[171]

The establishment and implementation of any marketable permit scheme involve several discrete policy decisions: 1) specifying a policy objective; 2) selecting a target; 3) allocating permits; and 4) monitoring and enforcing the system. Each is described briefly below.[172]

The economics literature tends to focus on two objectives with regard to marketable permits: efficiency and cost-effectiveness.[173] When efficiency is the objective, the regulator "balances... the damage cost incurred from remaining uncontrolled pollution with the costs of avoiding this damage." In other words, the regulator seeks an allocation which minimizes the sum of damage costs and avoidance costs. In contrast, cost effectiveness, "suggests that the 'best' allocation is the one which achieves a specified policy target at a minimum cost."

Creating an efficiency-based program, like a pollution charge program, requires knowledge of both control and damage costs: a resource intensive endeavor. Thus, because the costs of developing an efficient policy are often prohibitive, the cost effectiveness criterion is more readily adopted. Cost effectiveness, in contrast, separates the two components integral to a marketable permit program: the selection of a policy target and the adoption of a system to meet that target. Cost effectiveness always addresses the latter component and, only occasionally, the former. Economic efficiency addresses both.

Target selection tends to fall into one of two categories: aggregate emissions cost effectiveness (ECE) or performance standards. Tietenberg writes that the, "ECE criterion envisions the establishment of some standard - a legal ceiling - on the allowable weight of [waste generation] and then allocates the responsibility for meeting that standard among the [generators] in such a way as to minimize the resources committed to pollution control." The cost is that the individual generator will select a waste output level based on economic criterion and not on individual risk and that the resulting distribution of waste generation will not minimize risk (given a particular compliance cost). The benefit of the ECE is that it is comparatively simple to administer. In contrast, the performance standard, "represents target waste generation levels measured at specific regions at specified average times." The performance standard is more closely related, from a risk perspective, to environmental degradation than is the ECE. Unfortunately, the relationship of the waste generator to that standard is less clear.

The initial allocation of permits is, perhaps, the most difficult of the four key decisions regarding marketable permits.[174] The government specifies an acceptable level of pollution. The total acceptable level is divided among polluting firms and then allotted in the form of permits. Should the permits then be allocated by auction or endowment? Should they be allocated free of charge? If they are allocated free of charge, what should be the criteria? What about new entities that enter the market after the original distribution? How should importers be addressed?

Depending upon the allocation method selected, the cost burden for pollution control may be borne by the government (if the entitlements are considered held by the generator), consumers, potential new entrants or the polluter itself (if the entitlements are considered vested in the state).[175] Currently, there is no preferred method of allocation. Like the details of any market-based program, the selection of an allocation method is case specific and dependent upon the environmental goals and industries involved.

Finally, like a pollution charge system, a marketable permit system will only be as good as the enforcement function and its ability to detect violations. Oversight is so crucial, because without the ability to detect non-compliance, entities need not acquire permits. All of the properties of an incentive system are lost in an environment where non-compliance exists. Those entities that are non-compliant must be subject to sufficiently large fines or penalties so as to make non-compliance an extremely unattractive option. Moreover, violations must be broadcast to the broader regulated community.

Despite the fact that marketable permit systems are in their infancy, several conditions have been identified which will assist in the development of efficient markets:[176]

a. Compliance: Entities must accurately report waste generation (or use of materials) and acquire the number of permits needed to conform to usage.

b. Transaction Costs: Effectiveness and efficiency of marketable permit systems are achieved only if transaction costs (including the costs of finding buyers and sellers and trade approval) are sufficiently low.

c. Competitive Market Conditions for Permits: Sufficient quantities of buyers and sellers are needed to avoid conditions where a single entity can influence the price of the permit. Economic efficiency will only be realized if ample buyers and sellers participate in the market.

d. Certainty in the Permit Market: Trading will only occur if the rights of permits are clearly defined and there is little or no question concerning the legitimacy of transactions. If accountability is placed with permit sellers (not buyers) and permits are registered with the government, the certainty issue is minimized.

Marketable permit systems offer real potential for achieving environmental goals at private costs equal to or lower than conventional command and control alternatives.[177] There are, however, numerous issues that must be addressed as these systems evolve. Like pollution charges, the cost of control is not known in advance. Thus, economic efficiency is an iterative process.

Also like pollution charges, success is in large part dependent upon the enforcement function; detection of violations and the legal ability to deal with violations once detected. The costs of enforcement and oversight can be high if the regulated universe is large or if imports are involved.

The use of marketable permit trading has not been extensive either in the United States or abroad. Isolated cases, (controlling the use of chlorofluorocarbons and reducing lead in gasoline) have yielded promising results. Research concerning the further development of marketable permit systems should continue. Specifically, research must be conducted on the short- and long-run elasticities of supply and demand of potential targets.Analysis concerning the distributional effects of these systems should also be conducted. Finally, with regard to certain metals, foreign trade issues (sales and subsequent enforcement of permits oversees and balance of trade issues) must be more closely examined.

8.2.2.3 Deposit/Refund Programs[178]

Deposit/Refund programs are designed to accomplish several goals. First, the refund provides an incentive to follow the rules for proper disposal by raising the costs of illegal disposal. Second, deposit/refund programs that encourage proper disposal produce a desired composition of demand.[179] Third, deposit/refund program foster the conservation of raw materials. Deposit/Refund programs often promote the least-cost means for collecting waste.[180]

Deposit/refund programs are probably the easiest economic incentive program to develop, implement, understand and enforce. Essentially, a deposit/refund program is a front end tax on waste precursors. For example, a deposit/refund program might be used to control the disposal of sealed lead-acid batteries. A surcharge could be applied at any point along the production chain: from the acquisition of raw materials, through the manufacturing process or at the point of wholesale or retail purchase. The "taxed" party pays a surcharge which is refunded to them when either the battery is sold (by the subsequent purchaser who then bears the responsibility for proper disposal) or the product is sent on for recycling or proper disposal.

In principle, the size of the deposit equals the social cost of illegal disposal. Ideally, as the product moves through the sales chain (from manufacturer → wholesaler → retailer → consumer) the purchaser of the battery repays a deposit to the seller - mirroring the shift in responsibility for disposal from one party to another. This continues until the ultimate consumer returns the battery to a certified collection center responsible for recycling or disposal.

Refunds are paid from tax revenues that are paid out to collection centers upon verification of proper disposal. The certified recycling center repays the taxed party. Refund monies that are not repaid to consumers might be split between the government and the private sector.

Like other economic incentives, there are problems which limit the utility and effectiveness of deposit/refund programs. First, they are successful only where the targeted product or material is easily identifiable. Sealed lead-acid batteries are easily identifiable (except that it may be difficult for the consumer to distinguish between sealed lead-acid batteries and other types of rechargeable batteries such as Ni-Cds) and their sources are fairly limited. Clearly, deposit/refund programs create the incentive to turn toward imitations, substitutes and counterfeit products. If the targeted product is not identifiable, fraud will be prevalent, revenues will be insufficient to repay depositors and environmental goals will not be achieved.

Second, the transportation costs associated with proper disposal vary by location and may exceed the cost of the refund. Thus, not all waste may be properly disposed.

Third, collection facilities may face the significant incremental costs of handling hazardous waste subject to RCRA Subtitle C simply by virtue of the volumes of waste managed.

Finally, the policy-maker must look at the reaction/distortion chain: How will impacted manufacturers and consumers react? What substitutions will occur in the marketplace? Will there be shifts toward riskier (but not addressed) materials? Will the programs yield increases in the theft of recyclable goods? Will it undermine the viability of more or marginally successful waste management programs?

According to the Project 88 Report, deposit/refund programs are most appropriate when the incidence and consequences (to human health and the environment) of illegal waste disposal are great. There are three reasons:

i. Relative to command and control regulation, enforcement costs are lowered dramatically;

ii. Industry has a far greater incentive to conserve in process materials relative to virtually every other regulatory and incentive-based program; and,

iii. Because materials are always lost in process, industry has a greater incentive to look for materials that are "safer" (i.e., that are not subject to the deposit/refund system).

For these reasons, deposit/refund systems hold the greatest potential for containerizable hazardous wastes, batteries and other recognizable and verifiable goods.

8.2.2.4 Removal of Federal Subsidies[181]

For more than 100 years, the federal government has granted subsidies for the extraction and refining of certain natural resources - minerals, timber and energy stocks. These programs were originally implemented to encourage and maintain the development of mineral and other natural resources during periods of national economic difficulty. Though many were conceived to be temporary, many of the subsidies have remained in place over time. These programs endure, in large part, because of claims that they are important to national security and that they foster local stability. Federal subsidy programs generally fall into one of two categories: federal tax code provisions or federal programs.

It is generally held that a potential disincentive to recycling exists where a federal tax policy increases the cost of using recycled materials (where they are practical substitutes) relative to the cost of the virgin material. A disincentive is, thus, created by increasing the price of a recycled material or by decreasing the price of a virgin material. A recent EPA draft report examined four tax disincentives that impact the metals reclamation industry:

i. Percentage/Cost Depletion Allowances: Available to primary minerals and oil/gas extraction companies. In fiscal year 1988, beneficiaries received a tax break of greater than $1 billion.[182]
ii. Tax Provisions for the Development of Energy: Via expending (rather than capitalizing) costs associated with exploration and development.
iii. Financing Provisions: The investment tax credit (rescinded in 1986) was the most popular of these provisions. Private activity bonds and industrial development bonds now serve to provide low cost capital for capital intensive endeavors.
iv. Other Tax Considerations: Pollution control equipment expenditures are subject to a five year (not a seven year) amortization schedule, thereby providing a tax benefit for dirtier industries.

The same report also examined federal programs which impact the mining industries. Historically, among the most vital programs to this industry has been the below-cost leasing program.

The extraction of hardrock minerals is governed by the Mining Law of 1872. Essentially, federal lands are relinquished as the government leases the lands below cost. Provisions of this law allow a miner or company to stake a claim on federal lands which contain potentially valuable minerals. Once the claim is staked, the miner need only spend $100 per year on exploration and development to retain the claim. The miner is entitled to any revenues extracted from the claim. Revenues for any other extracted commodity require the claimant to pay royalties to the government. The Mining Law of 1872 makes this unnecessary.

Moreover, the Mining Law's patent provision allows the claim holder to transfer property rights (surface and sub-surface) to private ownership for between $2.50 and $5.50 per acre. Between 1872 and 1989, 3.2 million acres (nearly the size of Connecticut) have been sold under this provision.[183] Over time, the scope of the Mining Law has been narrowed. Today, several "fuel minerals" (oil, gas and coal) and "common variety minerals" (including sand, gravel stone and cinders) are excluded. Additionally, several million acres are now protected against mining. Nevertheless, the low cost of mining federal lands creates a market inefficiency with regard to virgin metals. This inefficiency virtually eliminates one of the most crucial components of social costs: the public value of land and the cost of resource depletion. Relative to recycled or reclaimed metals, the Mining Law of 1872 serves to lower the cost basis of raw materials.

Subsidies create market inefficiencies for several reasons. First, they support extraction and refining industries and businesses that are known to generate large volumes of waste and consume large volumes of water and energy: actions that hold the greatest potential to result in environmental degradation. By subsidizing these industries, the federal government prevents the market from properly valuing the social <u>and</u> private costs of these industries. Subsidies create a second inefficiency: they work against conservation goals by reducing the relative competitiveness of secondary (recycled) materials vis-a-vis virgin materials. Subsidies create other inefficiencies like excessive consumption of virgin materials and excessive waste.

In general, federal subsidies like those described above were intended to spur economic development. The impacts on the environment, on waste management and on recycling markets and industries were an unintended adverse side effect. Removing or reducing these subsidies could have dramatic positive <u>and</u> negative consequences. The range of responses could span a fairly large continuum and include:

a. No change in recycling rates;
b. Substitution of foreign materials in place of domestic raw materials (and a subsequent increase in the balance of trade deficit);
c. Substitution of recycled materials in place of domestic raw materials;
d. Substitution of other subsidized materials in place of domestic raw materials;
e. Reduced consumption.

Regardless of the response, the effect of a reduction or elimination of subsidies could reverberate throughout the economy. Thus, it is important for the policy-maker to make every effort to anticipate reactions in all sectors. In certain instances, where responses can not be anticipated, resolving the imbalance posed by preferential subsidies might be better answered by extending similar subsidies to recycling industries. In other instances, the existing subsidies could be phased out over a five or ten year period.

8.2.2.5 Evaluation Criteria: Questions for the Policy-maker

Economic incentives are not a panacea for waste policy. Clearly, there are circumstances where they hold the potential to be more effective and efficient than traditional command and control mechanisms. Sometimes, however, the command and control approach better protects human health and the environment. In order for the policy-maker to better assess which paradigm is likely to be more effective, we suggest that a good point of departure is presented by the answers to the questions below:

a. What is the problem that the policy is supposed to address?
b. Is the environmental problem the result of some externality?
c. How significant is the resulting environmental problem?
d. What jurisdiction can most effectively address the problem?
e. Is an incentive-based approach feasible?
f. Will an incentive-based approach help to maximize net social benefits?
g. Which particular incentive-based policy be effective?
h. What are the risk/benefit tradeoffs?
i. Will this encourage pollution prevention?
j. What distortions are likely to occur (e.g., fraud, illegal dumping)?

Clearly, this forces the policy-maker to look at the spectrum of regulatory and non-regulatory alternatives on a case-by-case basis. This has, historically, been perhaps the greatest challenge to waste policy in the United States: overcoming the minor differences in industries, products and processes that yield dramatic distinctions in risk, economics and the effectiveness of regulation.

8.2.2.6 Conclusion

There are philosophical barriers that must be overcome before economic incentives become more widely accepted. Author Charles Davis suggests that there are four philosophical barriers to the acceptance of economic incentives as a tool for regulating hazardous waste: administrative resistance to change; existing gaps and/or deficiencies in policy design; media attention focused on the perceived dangers of hazardous wastes and the presence or absence of selected policy and institutional characteristics on the state level.[184] In the four years since the printing of that article, the Agency has made progress in overcoming these barriers. The new Administration is looking for new and better ways to achieve environmental goals. EPA is now working more closely with industry, environmentalists, state and local government. Today, economic incentives are playing a greater part than ever before in the protection of human health and the environment. They will continue to provide an effective alternative to command and control in the future.

Chapter 9 Findings

Based on information collected and analyzed in completion of this report, EPA finds the following with respect to metal recovery of hazardous waste and its relationship to RCRA Subtitle C regulation:

1. RCRA Subtitle C regulation includes both incentives and disincentives to metal recovery of hazardous waste. Overall, RCRA Subtitle C regulation has been a substantial contributing factor to the increase in metal recovery of hazardous waste over 1980 levels. Currently, EPA estimates that between 2.6 and 2.8 million tons of hazardous waste are managed for metal recovery. In 1980, the GAO reported that fewer than 15,000 tons of metal were being recovered from industrial sludges, by-products and spent materials. Increases in world metal demand in the mid-1980 were also a major contributing factor. Major RCRA Subtitle C incentives include Land Disposal Restriction treatment standards and general requirements for Subtitle C management. These requirements encourage metal recovery by raising treatment and disposal costs thereby influencing generators to look for alternative forms of management such as metal recovery.

2. RCRA Subtitle C regulation is also apparently constraining metal recovery from reaching its potential in the United States. Compliance costs and liability concerns with RCRA Subtitle C regulation may limit waste generators selection of metal recovery as an option. These costs and concerns also limit the ability of metal recovery operations to expand their capacity and invest in new projects. Major RCRA Subtitle C disincentives to metal recovery include the derived-from rule, storage permit requirements, facility-wide corrective action and hazardous waste shipping costs. These requirements are the most costly and cumbersome for metal recovery operations to comply with.

3. RCRA Subtitle C regulation may inhibit innovative metal recovery technologies. The Molten Metal Technology case study in this report indicates that several RCRA Subtitle C provisions including research, demonstration and development permits and mass limits on regulatory exemptions for treatability studies may not be adequate for encouraging innovative metal recovery to develop at a faster rate. The case study also shows that innovative technologies may face a more difficult burden than established technologies in overcoming regulatory impediments to operation.

4. Notwithstanding the disincentives posed by RCRA Subtitle C regulation, damage incidents (including Superfund sites) involving metal recovery operations indicate that mismanagement of these materials can pose a significant risk to human health and the environment. Therefore, proposals to modify RCRA Subtitle C statutory or regulatory authority must assess the potential environmental/economic benefits against the potential for increased risk to human health and the environment. EPA has created the Definition of Solid Waste Task Force to assess these types of proposals.

5. Recovery of metals from metal-bearing hazardous waste has the potential to ameliorate the current U.S. balance of trade deficit. It may also become an important source of supply of strategic metals, particularly chromium.

6. Available data shows that metal recovery of hazardous waste should continue to increase in the 1990's as landfill capacity decreases and alternative forms of management are increasingly need to support the U.S. hazardous waste management system.

NOTES

1. PPA §6603(5), 42 U.S.C. §13102(5).

2. Source Reduction Opportunities in the Plating Industry, Terry Foecke, Minnesota technical Assistance Program (MnTAP), Presented at the 1989 Symposium on Metal Waste Management Alternatives: Minimizing, Recycling, and Treating Hazardous Metal Wastes.

3. For a more detailed discussion of metal recovery technologies that are available for hazardous wastes, please consult PEI Associates, Inc. Cincinnati, OH, "Overview of Metals Recovery Technologies for Hazardous Wastes", Prepared for Environmental Protection Agency, Cincinnati, OH, NTIS # PB91-176792, December 1990. Also see James W. Patterson, "Metals Separation and Recovery" in Metal Speciation, Separation and Recovery, (Chelsea, MI: Lewis Publishers, 1987), pp.63-93 and ICF Inc., "Profiles of Metal Recovery Technologies For Mineral Processing Wastes And Other Metal-Bearing Hazardous Wastes" prepared for U.S. Environmental Protection Agency, Office of Solid Waste, Waste Treatment Branch, Draft August 31, 1992.

4. American Society of Metals, Metals Handbook, Desk Edition, (Metals Park, OH: American Society of Metals, 1985), p. 1-30. **Winning** (a type of extractive metallurgy) refers to recovering metal from an ore or chemical compound. In contrast, **refining** refers to the purification of crude or impure metals. Both winning and refining are types of **process metallurgy**, the science of separating metals from their ores and purifying metals.

5. ICF, p.i.

6. ASM, p. 21-8.

7. ASM, p. 1-21.

8. ICF, p.ii.

9. Recall from Chapter 1 that the term "related secondary materials" refers to metal-bearing secondary materials such as sludges and by-products that exhibit a characteristic of a hazardous waste but are nonetheless not within the definition of solid waste when reclaimed. These materials would be regulated as hazardous wastes if discarded in manner other than reclamation.

10. U.S. Environmental Protection Agency, Office of Solid Waste and Emergency Response, National Biennial RCRA Hazardous Waste Report (Based on 1989 data), February 1993.

11. Between January and April 1993, EPA received information from five trade associations representing generators of metal-bearing hazardous wastes and metal reclaimers of these wastes. The trade associations included the National Association of Metal Finishers, the Steel Manufacturers Association, the American Iron and Steel Institute, the Metal Recovery Coalition, and the Association of Battery Recyclers.

12. Each source of data has limitations on its utility for this study. First, the BRS data are now over three years old. A number of new metal recovery operations have become commercial or expanded capacity. Second, certain metal-bearing secondary materials such as sludges or by-products of an industrial process which exhibit a characteristic for toxicity, reactivity, corrosivity or ignitability are not solid wastes and therefore hazardous wastes when reclaimed (40 CFR §261.2(c)(3)). Therefore, these materials would ordinarily be exempt from BRS reporting requirements (40 CFR §262.41). These same materials would be hazardous waste under the federal rules if land disposed or applied to the land. Based on the information

reviewed in completion of this study, it is probable the BRS data underestimates the total quantity of metal-bearing hazardous wastes being managed for metal recovery and the United States. Although more current than the BRS data, the trade association information submitted to the EPA was completed in a limited time frame and represents only a portion of the regulated community subject to RCRA regulation.

13. Note: EPA has proposed a rule, (Part 273, Special Collection System, for encouraging the efficient collection and transport of nickel-cadmium batteries. 58 FR 8102, February 11, 1993. Although the proposed rule does not specify management in metal recovery operation, land disposal restriction treatment standards specify that these batteries must be managed for reclamation prior to land disposal 40 CFR §268.42. EPA believes that the proposed Part 273 regulations would increase the recovery rate for nickel-cadmium batteries.

14. National Research Council, Environmental Epidemiology: Public Health and Hazardous Wastes, (Washington D.C.: National Academy Press, 1991).

15. NRC identified substances that were present at more than 100 Superfund sites and are either animal or human carcinogens and also classified as group 1 substances of the Agency for Toxic Substances and Disease Registry (ATSDR)/EPA list of the 100 most hazardous substances, National Research Council, p 104.

16. Ibid., p.106.

17. Ibid., p. 105.

18. EPA, RCRA Implementation Study Update: The Definition of Solid Waste, July 1992. Appendices C and D. (hereafter RIS update).

19. Robert A. Goyer, M.D., Chapter 19 "Toxic Effects of Metals" in Mary O. Amdur, Ph.D., John Doull, Ph.D, M.D., Curtis D. Klaassen, Ph. D. eds, Casarett and Doull's Toxicology: The Basic Science of Poisons, 4th ed., (United States of America: McGraw-Hill Inc. 1993. Lars Friberg, Gunnar F. Nordberg, Velimir B. Vouk, Handbook on The Toxicology of Metals, Vols. 1 & 2, (Amsterdam, New York, Oxford: Elsevier Science Publishers, 1986); Pradyot Patnaik, A Comprehensive Guide to the Hazardous Properties of Chemical Substances, (New York, New York: Van Nostrand Reinhold, 1992); John Harte, Cheryl Holdren, Richard Schneider, Christine Shirley, Toxics A to Z: A guide to everyday pollution hazards, (Berkeley and Los Angeles, CA: University of California Press, 1991).

20. United States Environmental Protection Agency, Office of Pollution Prevention and Toxics, 1991 Toxics Release Inventory: Public Data Release, EPA 745-R-93-003, May 1993.

21. Ibid., p.19.

22. Note that precious metals recovery is subject to a reduced set of requirements. Persons recovering precious metals must comply with RCRA §3010 notification requirements and must maintain records to document that they are not accumulating materials speculatively (as defined in 40 CFR §261.1(c)). In addition, generators, transporters and TSDs must comply with manifest requirements. Precious metals include economically significant amounts of gold, silver, platinum, palladium, iridium, osmium, rhodium, ruthenium, or any combination of these.

23. The term "land disposal" means placement in or on the land except in a corrective action management unit, and includes, but is not limited to, placement in a landfill, surface impoundment, waste pile, land treatment facility, salt dome formation, salt bed formation, underground mine or cave, or concrete vault or bunker intended for disposal.

24. Limited exceptions exist. See 40 CFR §268.1; §268.5, and §268.6.

25. Because the metal-bearing wastes are generally listed sludges that will be reclaimed, they are defined as solid wastes under 40 CFR §261.2. Given that these solid wastes are listed hazardous wastes under 40 CFR §261.31 and §261.32, they are subject to all applicable RCRA regulations. Such hazardous wastes include F006-F009 (electroplating), F010-F012 (metal heat treating), and F019 (sludges from aluminum coating). They also include K-listed wastes from iron and steel plants, secondary lead smelters, and inorganic pigment production.

26. 40 CFR §261.3(c).

27. 54 FR 41176; 8/19/91.

28. Rotary kilns, flame reactors, electric furnaces, plasma arc furnaces, slag reactors, rotary hearth furnace/electric furnace combinations, or industrial furnaces. In addition, the rule imposes testing and notification requirements.

29. 40 CFR §261.4(d)(1). Note that recent litigation may affect both the derived-from rule and the applicability of the LDR requirements. See, Shell Oil Co. v. EPA, U.S. Court of Appeals for the District of Columbia Circuit, No. 80-1532 et al. (12/6/91); and Chemical Waste Management, Inc. v. EPA, U.S. Court of Appeals for the District of Columbia Circuit, No. 90-1230 et al., (9/25/92).

30. 40 CFR §261.1(c)(7).

31. Tank storage facilities and some piles and surface impoundments that intend to clean close are not required to provide post-closure financial assurance. (See 40 CFR §264.140(b)). Also, State and Federal facilities are not subject to closure and post-closure financial assurance requirements (40 CFR §264.140(c) and §265.140(c)).

32. 40 CFR §266, Subpart H.

33. On-site furnaces, exempt under small quantity generator provisions, burning their own hazardous waste are exempt from regulation under Parts 264/265 and 270 with respect to the storage of mixtures of hazardous waste and fuel in tanks that feed directly to the furnace.

34. Ore or mineral furnaces subject to §261.4(b)(7) must process at least 50 percent by weight normal, non-hazardous raw materials.

35. EPA has exempted selected mining wastes from the definition of hazardous waste including slags from primary copper and lead production, as well as from iron blast furnaces and open hearth/basic oxygen furnace carbon steel production. 40 CFR §261.4(b)(7).

36. DPRA Inc., Comparative Analysis of RCRA Treatment and Disposal Costs and Recycling Costs With and Without Regulatory Modifications, Final Report, (St. Paul, MN: DPRA Incorporated, March 1991) Prepared for Regulatory Analysis Branch, Office of Solid Waste, U.S. Environmental Protection Agency.

37. Spent-lead acid batteries are actually subject to reduced RCRA regulatory requirements for collection and transport under 40 CFR §266.80. Person reclaiming these materials are subject to full Subtitle C regulation including storage permit requirements prior to reclamation.

38. Personal communication between Paul Borst, U.S.E.P.A./Office of Solid Waste and Lyle Salsbury, National Steel Corp./Great Lakes Division, May 26, 1993.

39. Disposal costs for untreated K061 were approximately $200 per ton. Shipping the same material to Palmerton, PA for metal recovery was estimated at approximately $400 per ton including both shipping cost and user fees. Metal recovery was considered at least as cost effective as treatment and disposal costs at a Subtitle C facility.

40. Spent lead-acid batteries are typically sawed or shredded prior to being smelted to remove lead plates and groups. LDR requirements prohibits the storage of a restricted waste (e.g., the shredded battery material) through placement on the land (40 CFR §268.50). In 1992, EPA promulgated a final rule which allows owners/operators of hazardous waste treatment, storage or disposal facilities to place restricted wastes in **containment buildings** without considering the placement of the restricted waste to constitute land disposal as defined in §3004(k) of RCRA (57 FR 37211, August 18, 1992). Containment building standards are stated in Subpart DD of 40 CFR Parts 264 and 265.

41. Under RCRA, hazardous wastes being reclaimed remain hazardous wastes until the reclamation process is complete. 50 FR 633,634,655, January 4, 1985. Because the Agency recognized that some secondary materials that are partially-reclaimed are more commodity-like than waste-like, it has promulgated a variance from the definition of solid waste for materials that are partially-reclaimed. 40 CFR §260.30(c). The appropriate regulatory agency will grant or deny this variance based upon a series of criteria promulgated by EPA. 40 CFR §260.31(c).

42. This exclusion exempt materials that are returned to the original process from which they are generated without first being reclaimed. The material must substitute for raw material feedstock and the process must use raw materials as the principal feedstocks.

43. The concern is that producers of waste-derived products may become potentially responsible parties (PRPs) under Superfund remedial actions if metal recovery residuals used to produce their products remain hazardous waste because of the derived-from rule. CERCLA §107 defines covered persons for purposes of liability as any person who arranged for the treatment or disposal of a hazardous substance. Because the CERCLA definition of hazardous substance includes RCRA Subtitle C hazardous wastes, some people believe that the risk of PRP liability is greater if materials are designated as a hazardous waste.

44. DPRA Inc., Comparative Analysis of RCRA Treatment and Disposal Costs and Recycling Costs With and Without Regulatory Modifications, Final Report, (St. Paul, MN: DPRA Incorporated, March 1991) Prepared for Regulatory Analysis Branch, Office of Solid Waste, U.S. Environmental Protection Agency.

45. The DPRA analysis also included other wastes such as K048-52 petroleum wastes, F003-5 solvents, and K088 spent aluminum potliners. However, because these wastes do not involve metal recovery, the DPRA results for these wastes have not been included in this report.

46. Ibid., p.6

47. For example, the study assumes that electroplating rinsewaters may be evaporated in smaller facilities and have the metal concentrate reused in the plating bath. Based on the Agency's experience, electroplating rinsewaters typically commingle several types of metals from several different plating baths. This being the case, one could not reuse metal concentrates in a single plating bath without contaminating the plating bath with other metals. Evaporation might be used successfully if either the plating shop used only one kind of metal or if rinsewaters were kept segregated with only one type of metal.

48. For low zinc (5 percent) K061, electric arc furnace dust, treatment and disposal is less expensive than metal recovery at a large commercial metal recovery facility. This is true for recycling under current regulations or with regulatory modifications.

49. DPRA, p. 40.

50. See Chapter 3, p.20

51. DPRA, p.42

52. EPA is not commenting in this report on the extent of Subtitle C regulatory disincentives identified by the regulated community in this section since the Agency has not had the opportunity to verify the claims of the regulated community on the significance of the disincentives. In theory, any type of RCRA Subtitle C regulatory compliance cost for metal reclaimers is a disincentive to the extent that it displaces capital that could otherwise be used for investment for additional metal recovery capacity. The more relevant question is not whether RCRA Subtitle C regulatory requirements are disincentives, but rather what is the extent of the disincentives relative to incentives provided by the regulation.

53. Roy O. Ball, Gregory P. Verret, Philip L. Buckingham, Stephen Mahfood, "Economic Feasibility of a State-Wide Hydrometallurgical Recovery Facility", Metal Speciation, Separation and Recovery, James W. Patterson and Roberto Passino Eds., (Chelsea, MI: Lewis Publishers, 1986), pp. 690-711.

54. Leading Edge Reports, A Competitive Analysis of Hazardous Waste Management, (Cleveland Heights, OH: Leading Edge Reports, 1990), p.140.

55. ICF Inc., 1990 Survey of Selected Firms In The Hazardous Waste Management Industry: Final Report, Prepared for the United States Environmental Protection Agency, Office of Policy Analysis, July 1992 (Fairfax, VA: ICF Inc, July 1992), p.2-6

56. Ibid., 2-24, 3-1.

57. Ibid., p. 2-27.

58. U.S. Environmental Protection Agency, Office of Policy, , Environmental Investments: The Cost Of A Clean Environment: A Summary, EPA-230-12-90-084 , December 1990, p.3-4. According to the executive summary of this report, historic data are based on surveys conducted by the Department of Commerce. Projected costs are extrapolations of spending trends and EPA estimates of the costs of new regulations.

59. ICF. Inc., 1990 Commercial Survey..., p.2-33.

60. Ibid., p. 3-2.

61. Ibid., p. 5-2.

62. Part of U.S. Filter Recovery Service's success is that the firm is able to keep rinsewaters from electroplating operations segregated so that cross-contamination of metals does not occur. This produces a purer product than would occur if the rinsewaters were commingled and the processed to separate the metal using conventional leaching and precipitation techniques.

63. Putnam, Hayes & Bartlett, The Impacts of Lead Industry Economics and Hazardous Waste Regulations On Lead-Acid Battery Recycling: Revision and Update, Prepared for Office of Policy Analysis, September 1987, pp. 22-30.

64. John E. Tilton (ed.)World Metal Demand: Trends and Prospects, (Washington D.C.: Resources For The Future, 1990), pp.1-11.

65. Tilton, p.7.

66. National Research Council, Competitiveness of The U.S. Minerals and Metal Industry, (Washington D.C.: National Academy Press, 1990), pp. 11-13.

67. National Research Council, p. 19.

68. U.S. Bureau of Mines, Mineral Yearbooks 1984 to 1989.

69. U.S. Bureau of Mines, Metal Prices In The United States Through 1991, 1991.

70. Price information is adjusted for inflation using 1987 dollars.

71. Putnam, Hayes, & Bartlett, pp. 1, 27.

72. Data in Table 5.2 were taken from data submitted to EPA by Weinberg, Bergeson and Neuman on behalf of Battery Council International, May 25, 1993.

73. 1993 Data From Battery Council International.

74. Ibid., p.46.

75. See Section 5.1.1.4. supra.

76. Letter from Robert N. Steinwurtzel, Counsel to the Association of Battery Recyclers, to William K. Reilly, Administrator, Environmental Protection Agency, March 10, 1992., p.4.

77. Note: alternative treatments that can achieve the same degree of performance may be submitted via an application to the EPA administrator who may at his or her discretion approve the use of the alternative treatment standard. 40 CFR §268.42(b).

78. N.R.C., p.16.

79. Ibid., pp. 34-35.

80. General Accounting Office, Industrial Wastes: An Unexplored Source of Valuable Minerals, (Washington D.C.: GAO, May 15, 1980), p.51.

81. Ibid., p. 51.

82. Refer to the Inmetco case study below in Chapter 6.

83. Ibid., p.13.

84. Please note that this estimate has been developed from data of metals recovered between 1989 and 1993.

85. Environmental Protection Agency, Office of Pollution Prevention and Toxics, 1991 Toxics Release Inventory: Public Data Release, EPA 745-R-93-003, May 1993, pp. 60-63. TRI data are estimates of the manufacturing sector (SIC codes 20-39) on quantities of toxic and hazardous chemicals released to the environment. The data estimates release of materials that would be **hazardous constituents of hazardous waste.** Thus, for example, the data includes release of lead or cadmium as opposed to quantities of materials

that contain lead or cadmium. In contrast, Biennial Reporting Systems data that EPA uses to evaluate hazardous waste management reports quantities of materials (wastes) that contain hazardous constituents. While TRI data does not allow direct comparison with BRS or other hazardous waste data, it is a useful proxy especially for estimating metal totals being reclaimed that may originate form related secondary materials such as characteristic sludges and by-products being reclaimed that are not normally estimated in BRS data.

86. Ibid. p.63.

87. The reader should note however that large quantities of industrial D wastes such as mining wastes are not included in the TRI data base since they do not fall within the 20-39 SIC code manufacturing sector range.

88. These include P015, beryllium dust; P087, osmium trioxide; P092 phenyl mercury acetate, U151 mercury.

89. U.S. Bureau of Mines, Mineral Yearbooks 1984 to 1989.

90. U.S. Bureau of Mines, Metal Prices In The United States Through 1991, 1991.

91. Research Triangle Institute, Center For Economics Research, Characterization of Recycled Wastes by SIC Code, Waste Source Code, Waste Description Code and Metals Present, Prepared for Office of Policy, Planning and Evaluation, U.S. Environmental Protection Agency, July 1991, Chart 1-Characterization of Recycled Wastes: Summary Data.

92. Please note that this data was analyzed from National Survey of Hazardous Waste Generators conducted in 1987 for calendar year 1986. Data limitations preclude using this data set to conduct trend analysis with the other EPA estimates of metal recovery of hazardous waste cited in this report.

93. For example, the National Association of Metal Finishers estimates that 15 to 20 percent of F006 was recovered in 1992. There are no reported quantities of F006 being managed for metal recovery in 1989 BRS data (although EPA is aware that some F006 recovery did occur at operations exempt from BRS reporting requirements such as Cyprus Mines in Arizona). Also, K061 recovery remains high in 1992 with 90 percent (500,000 tons) recovered. In addition, the K061 market appears to becoming increasingly competitive with a number of new firms entering the market such as Metal Recovery Technologies, Zia Technologies of Texas, Glassification International Limited (vitrifies K061 for use in glass frit) at a time when the price of zinc has declined over the last three years.

94. For purposes of this report, a central recovery facility can be considered to be an off site metal recovery operation that reclaims metals from hazardous waste. As mentioned later in this case study, U.S. Filter representatives believe that a central recovery facility can be distinguished from other off site recovery facilities by the degree of involvement in customer operations and greater likelihood of generator compliance.

95. From 1980 to 1986, private parties in Cleveland and New York City tried unsuccessfully to initiate central recovery facilities despite the fact that each operation was believed to be economically viable. The Cleveland initiative failed when the federally mandated compliance date for categorical pretreatment standards of April 27, 1984 for plating facilities forced several major platers to install on-site pretreatment systems to achieve faster compliance. As a result the market for the proposed central recovery facility, collapsed. Illinois Department of Energy and Natural Resources, ILENR/RE-WR-86/12, Feasibility of a Central Recovery Facility For The Metal Finishing Industry In Cook County, November 1986, p.47.

The New York initiative suffered a similar setback when 20 plating firms backed out to avoid civil

penalties for noncompliance with federal pretreatment regulations. The time required to obtain a RCRA Part B permit for the proposed central recovery facility contributed to this result by extending the time of noncompliance for the plating firms. Ibid. p.50. The New York initiative to cite a central recovery facility ultimately failed when remaining platers backed out after paying civil penalties for noncompliance with federal pretreatment regulations. Personal communication between Paul Borst, EPA/Office of Solid Waste and representatives of U.S. Filter Recovery Services Inc., Roseville, MN, February 12, 1993.
Personal communication between Paul Borst, EPA and David Norwine, VP Haward Corp, May 17, 1993.

96. Illinois Department of Energy and Natural Resources, Ibid.; Roy O. Ball, Gregory P. Verret, Philip L. Buckingham, Stephen Mahfood, "Economic Feasibility of a State-Wide Hydrometallurgical Recovery Facility", Metal Speciation, Separation and Recovery, James W. Patterson and Roberto Passino Eds., (Chelsea, MI: Lewis Publishers, 1986), pp. 690-711. The Illinois study concludes that a CRF would probably not be cost-effective in Cook Co. because civil penalties would drive metal finishers to install on-site pretreatment units and eliminate the market for CRF services. In contrast, Ball. et. al. conclude that a CRF in Missouri would not be cost-effective because treatment and disposal cost of plating sludges in a hazardous waste landfill would be considerably cheaper than recovery at a CRF.

97. Personal communication between Paul Borst, EPA Office of Solid Waste and representatives of U.S. Filter Recovery Services Inc., Roseville, MN, February 12, 1993.

98. On the other hand, EPA regulations favor pyrometallurgical metal recovery operations in two ways. First, Land Disposal Restriction (LDR) treatment standards that specify a recovery technology (40 CFR §268.42) only specify pyrometallurgical technologies. So, if a metal-bearing hazardous waste such as high category mercury waste or nickel-cadmium batteries was amenable to recovery hydrometallurgically, it would still need to be recovered from a high temperature (pyrometallurgical) process to meet LDR treatment standards prior to land disposal. Second, generic exclusion levels for residues generated from high temperature metal recovery operations (HTMR) disposed in Subtitle D facilities (e.g., a nonhazardous landfill) by definition do not apply to residues from hydrometallurgical operations. These RCRA Subtitle C provisions may favor pyrometallurgical recovery by creating markets and reducing compliance costs for metal-bearing hazardous wastes. BIF permit requirements cut the other way favoring hydrometallurgical operations.

99. Ibid. note 1.

100. Jim Bishop and Mary Melody, "Inorganics treatment and recovery", Hazmat World, February 1993, p.24.

101. Inco Limited Annual Report, 1991, p.26.

102. Inmetco- Best Demonstrated Available Technology Project, Volumes 1 and 2 (October 18, 1991).

103. EPA representatives from the Office of Solid Waste visited Inmetco's Ellwood City facility on December 18, 1993. The company provided a paper to EPA, dated December 17, 1993, entitled "Some Observations on Regulatory Costs Associated with Operation of a Metals Reclamation Facility Under the Provision of Subtitle C of RCRA".

The company also submitted a separate response to EPA's Metal Reclamation Study Survey which the Agency had distributed in January 1993 to the Metal Recovery Coalition and the Association of Battery Recyclers to solicit the input of these trade associations. Letter From Richard H. Hanewald, President of Inmetco to Paul Borst, EPA Office of Solid Waste dated February 17, 1993. Inmetco is a member of the Metal Recovery Coalition.

104. Paper submitted by Inmetco to EPA entitled "Proposed Structure for Regulating the Recycling of Hazardous Secondary Materials Through Metals Recovery", dated January 28, 1993 and attached with a letter from Richard H. Hanewald, President of Inmetco to James R. Berlow, EPA, Office of Solid Waste, dated January 28, 1993.

105. Paper submitted to EPA by Inmetco dated January 28, 1993 and entitled "The Risks and Benefits of Recycling Compared to the Risks and Benefits of Primary Manufacturing and the Use of Virgin Materials" and attached with a letter from Richard H. Hanewald, President of Inmetco to James R. Berlow, EPA, Office of Solid Waste, dated January 28, 1993.

106. Inmetco, "Some Observations on Regulatory Costs Associated with Operation of a Metals Reclamation Facility Under the Provisions of Subtitle C of RCRA", December 17, 1992, p.6. Although it is possible that some of this cost could be passed on to Inmetco's customers, stainless steel producers could choose to export their waste or manage it in an alternative manner.

107. Personal communication between Paul Borst, EPA/Office of Solid Waste and Sigma Toth, PADER, Meadville Region, March 25, 1993.

108. Infra Note 4., January 28, 1993 letter from Richard H. Hanewald to Jim Berlow. Inmetco believes based on their current customers or publicly available information that most of these materials are currently being landfilled or exported for reclamation or disposal.

109. A strategic material is defined by OTA as:

> "[a material] for which the quantity required for essential civilian and military uses exceeds the reasonably secure domestic and foreign supplies, and for which acceptable substitutes are not available within a reasonable period of time"

Therefore, a strategic material is defined by both the critical nature of its use and the vulnerability of its supply. Office of Technology Assessment, Strategic Materials: Technologies to Reduce U.S. Import Vulnerability, 1985, p.11. Chromium is one of four first tier strategic materials identified by OTA along with manganese, cobalt and platinum group metals.

110. Inmetco, "Proposed Structure for Regulating the Recycling of Hazardous Secondary Materials Through Metal Recovery", January 28, 1993.

111. Jeffrey D. Smith, "Molten Metal Technology, Technology Destroys Waste and Recovers Salable Products", EI Digest, July 1991, p.8.

112. Molten Metal Technology, Prospectus, 1993, p. F-7.

113. Jim Bishop and Mary Melody, "Inorganics treatment and recovery", Hazmat World, February 1993, p.28.

114. David Stamps, "Molten Metal Technology, Soon-to-Open R&D Center Will Test Company's Claims of Turning Hazardous Waste into Useful Materials", EI Digest, November 1992, p. 13.

115. Smith, p.11.

116. Stamps, p. 13.

117. Stamps. p.13.

118. Stamps, p.13.

119. Letter from Eugene Berman, Vice-President For Regulatory Affairs, MMT to Paul A. Borst, EPA Office of Solid Waste, February 17, 1993.

120. Personal communication between Paul Borst, EPA Office of Solid Waste and Eugene Berman, MMT, Vice-President for Regulatory Affairs, January 26, 1993. See also, Stamps. p.14.

121. This assumes that the CEP unit either is not subject to the Boiler and Industrial Furnace requirements at 40 CFR Part 266, Subpart or that the unit is subject to Subpart H requirements and is conditionally exempt as metal recovery operation burning solely for metal recovery.

122. September 23, 1992 letter from Ed Kunce, Deputy Commissioner, MADEP to Merrill S. Homan, Director, Office of Waste Management, U.S. Environmental Protection Agency, Region 1 on MMT. Personal communication between Paul Borst, EPA, Office of Solid Waste and Eugene Berman, Vice-President For Regulatory Affairs, MMT, January 26, 1993.

123. Stamps, p.14.

124. April 26, 1989 Memorandum from Sylvia K. Lowrance to Hazardous Waste Management Division Directors on F006 Recycling. The attachment of this memorandum recognizes the economics of the recycling process as a relevant factor although it looks more at the disparity of revenue derived from recovered materials versus user fees rather than the value of recovered materials versus their cost of processing. EPA does not consider this to be a test or requirement.

125. April 26, 1989 Lowrance Memorandum, p.1.

126. EPA, Office of Solid Waste and Emergency Response, "The Nation's Hazardous Waste Management Program at a Crossroads, The RCRA Implementation Study", EPA/530-SW-90-069, July 1990, p.111.

127. Final Rule on Land Disposal Restrictions for Electric Arc Furnace Dust, 56 FR 41164 (August 19, 1991).

128. The information presented in the Horsehead Resource Development Company, Inc. case study not otherwise noted was obtained from personal conversations between Charlotte Mooney, EPA Office of Solid Waste, and Bruce Conrad, Director of External Relations, Horsehead Resource Development Company, Inc. and from company personnel during a site visit at the Palmerton, Pennsylvania facility conducted by EPA staff on May 7, 1993.

129. In comments on this case study and in the context of enforcement proceedings, HRD has argued that their operations are not reclamation of hazardous waste and that the term reclamation should not be used to describe the operations. HRD thus argues that they are not actually subject to RCRA at all. In this case study the Agency uses the word recovery to describe HRD's operations, because recovery is a specific form of reclamation and HRD's operations constitute recovery of metal from hazardous waste. See section 1.3 of this study for a general discussion of these terms.

130. October 14, 1993 letter from William L Miller, Chief, Division of Policy Analysis, Bureau of Mines, U.S. Department of the Interior to Paul Borst, U.S. Environmental Protection Agency, Office of Solid Waste, and personal communication between Paul Borst, U.S. EPA, and James F. Collins, Steel Manufacturers Association, October 21, 1993.

131. Derby, James V., Recycling of Zinc-Bearing Materials, Zinc Corporation of America, undated, p. 5.

132. Under the federal hazardous waste regulations, recycling units are exempt from RCRA permitting unless they are boilers or industrial furnaces (40 CFR 261.6(c)(2)). Industrial furnaces conducting metal recovery are also exempt from permitting (40 CFR 266.100(c)). However, units that store hazardous wastes prior to recycling generally do require permits (40 CFR 261.6(c)(1)).

133. The information presented in this section was obtained from the following sources:

-- Derby, James V., Recycling of Zinc-Bearing Materials, Zinc Corporation of America, undated.

-- Horsehead Resource Development Company, Inc., HRD Flame Reactor Flash Smelter, Eliminating Waste and Landfill Liability Through High-Temperature Processing, marketing materials, undated.

-- Horsehead Resource Development Company, Inc., HRD Metals Recovery Services, Eliminating Wastes and Liability Through Recycling Technology, marketing materials, undated.

-- ICF Inc., Profiles of Metal Recovery Technologies for Mineral Processing Wastes and Other Metal-Bearing Hazardous Wastes, prepared for U.S. Environmental Protection Agency, Office of Solid Waste, Draft, August 31, 1992.

-- James, S.E. and Bounds, C.O., Recycling Lead and Cadmium, As Well As Zinc, From EAF Dust, Proceedings of Lead-Zinc '90, The Minerals, Metals, and Materials Society, 1990.

-- Smith, Jeffrey D., Horsehead Resources Development, EAF Recycling Stalwart Expands Within and Beyond its Core Business, EI Digest, Environmental Information Ltd., May 1991.

134. Letter from Metals Recovery Coalition to EPA, Office of Solid Waste., March 1, 1993.

135. Under 40 CFR 266.20(b), zinc-containing fertilizers using EAF dust that are produced for the general public's use are not presently subject to RCRA regulation.

136. EPA has determined that use of EAF dust to produce "glass frit" that is used in roofing shingles, abrasive blast, glass ceramic, and ceramic glazes is direct reuse of EAF dust as a product rather than reclamation of a waste and thus is not subject to RCRA regulation.

137. EPA has promulgated "generic delisting" concentrations for slag from high temperature metal recovery (40 CFR 261.3(c)(2)(ii)(C)). To meet the generic delisting criteria the slag must not exceed concentrations specified for 13 constituents. Once these criteria are met, the slag may be managed in a Subtitle D (non-hazardous waste) unit.

138. In addition, some wastes from primary metal production are excluded from hazardous waste regulations based on the statutory "Bevill" exclusion (40 CFR 261.4(b)(7)). The excluded wastes are generated in high volumes and are of relatively low toxicity, and include, for example, slag from primary zinc processing (40 CFR 261.4(b)(7)(xx)).

139. There is a case-by-case variance available by petitioning the EPA and demonstrating that a partially-reclaimed material is more commodity-like than waste-like (40 CFR 260.30(c)). This variance has been used infrequently.

140. The majority of the information in the East Penn Manufacturing Company, Inc. case study was obtained from company marketing materials and from personal conversations between Charlotte Mooney, EPA Office of Solid Waste, and Richard Leiby, Vice President of Metals Operations, East Penn

Manufacturing Company, Inc.

141. Smith, Bucklin & Associates, Inc., 1990 National Recycling Rate Study, prepared for Battery Council International, May 1992, p. 1.

142. Personal communication between Charlotte Mooney, EPA Office of Solid Waste and Ann Noll of the Battery Council International.

143. Smith, Bucklin & Associates, Inc., 1991 National Recycling Rate Study, prepared for Battery Council International, April 1993, p. 7.

144. 50 FR 6649, January 4, 1985, and 48 FR 14498 - 499.

145. It is difficult to tell, however, how much other variables may also be affecting the recycling rate of do-it-yourselfers and conditionally exempt small quantity generators. These variables might include state laws mandating recycling and banning landfilling, landfills' unwillingness to accept batteries (which are relatively large and thus easy to identify), and people's natural disinclination to store batteries or manage them improperly because the acid electrolyte makes the hazards posed by batteries relatively obvious.

146. According to the U.S. Bureau of Mines, Mineral Commodity Summaries, in 1992, total U.S. chromium usage was estimated at 288 thousand metric tons. Although it is not possible with current data limitations to directly estimate the amount of chromium discarded in hazardous waste, 1991 Toxic Release Inventory (TRI) data indicates that the manufacturing sector discarded 21,000 tons of chromium through releases to the land or transfers for disposal. This represents 7.3 percent of total chromium use in the United States. Most of this discarded material included industrial wastewaters (chromium used as a corrosion inhibitor) and chromium-bearing sludges and by-products of manufacturing. Many of these materials are likely to be hazardous wastes under RCRA Subtitle C.

147. Based on the difference between imports and exports of each commodity as reported in McClaskey, Jacqueline A. and Smith, Stephen D., "Survey Methods and Statistical Summary of Nonfuel Minerals," U.S. Department of the Interior, Bureau of Mines, 1991.

148. GAO, Industrial Wastes: An Unexplored Source of Valuable Minerals, Washington D.C.: GAO, 1980), pp. 10-13.

149. See Shamsuddin, M. "Metal Recovery from Scrap and Waste," *Journal of Metals*, February, 1986; and Brooks, Clyde S., "Metal Recovery from Industrial Wastes," *Journal of Metals*, July, 1986.

150. OTA, p.11.

151. (1978-1982) U.S. Bureau of Mines, "Mineral Commodity Summaries", 1983 and 1984 (as reported in OTA...1985), (1988-1992) U.S. Bureau of Mines, "Mineral Commodity Summaries", 1993.

152. Rutile, a mineral precursor to the production of Titanium, has been excluded because of insufficient data.

153. Purchasing Vol: 107 Iss: 2 Date: Jul 20, 1989

154. U.S. Bureau of Mines, Mineral Commodity Summaries, 1993.

155. Gabler, R.C., Jr., "A Platinum-Group Metals Consumption and Recycling Flow Model," U.S. Bureau of Mines, IC 9303, 1991.

156. Comprehensive data are only available for the first tier metals and a few others, so this table is limited to the first tier metals.

157. General Accounting Office, Industrial Wastes: An Unexplored Source of Valuable Minerals, (Washington D.C.: GAO, May 15, 1980), pp. 33-34. The GAO mentioned three Japanese government agencies providing such assistance: the Environmental Pollution Control Service Corporation (EPCSC), the Japan Development Bank (JDB) and the Small Business Finance Corporation (SBFC). The EPCSC financed pollution prevention and metal recovery projects and sells them on a long term, low interest basis. It also extended loans to finance the installation of pollution prevention projects at various facilities. The JDB and SBFC provided loans for pollution prevention and metal recovery projects for large and small businesses.

158. Support for this section was developed from the following sources. Bill Quan, "Waste Exchanges" in Standard Handbook of Hazardous Waste Treatment and Disposal, Harry M. Freeman ed., (New York: McGraw-Hill Book Company, 1989), pp. 5-29 to 5-37.; Kenneth E. Noll, Charles N. Haas, Carol Schmidt, Prasad Kodukula, Industrial Waste Management, James Patterson ed., Chelsea MI: Lewis Publishers, Inc, 1985), pp. 61-63., GAO, supra, pp. 35-36.

159. See Economic Instruments for Environmental Protection, OECD, Paris, 1989.

160. Note that the discussions that follow and each of the economic hypotheses assume a profit maximizing motive on the part of regulated entities.

161. See U.S. Environmental Protection Agency, Economic Incentives: Options for Environmental Protection, Office of Policy, Planning and Evaluation, March 1991, 2IP-2001; and, Tietenberg, Tom, Environmental and Natural Resource Economics Scott Foresman and Company, 1984 for a further discussion of pollution charges.

162. Marshall, Will and Schram, Martin, Mandate for Change, The Progressive Policy Institute, Berkley Books, January, 1993.

163. Such an approach would involve first setting the pollution charge below the incremental cost of controlling pollution in order to encourage firms with relatively low control costs to reduce their generation of waste.

164. Noll, et. al., supra, Note 138., p.56-60.

165. This assumes that those entities which generate the greatest amount of waste also generate the greatest amount of taxable income.

166. See U.S. Environmental Protection Agency, Economic Incentives: Options for Environmental Protection, Office of Policy, Planning and Evaluation, March 1991, 2IP-2001; and, Tietenberg, Tom, Environmental and Natural Resource Economics Scott Foresman and Company, 1984 for a further discussion of marketable permit systems.

167. There have been numerous interpretations of "bubble" by the courts and by EPA. In general, the term is used when describing some unit of area which may encompass contiguous or non-contiguous stacks, pipes or other outlets for the disposition of waste. The limits of a "bubble" may span all or part of a facility or region.

168. Regional efforts include, for example the Great Lakes Initiative.

169. See Anderson, Terry L. and Leal, Donald R. Free Market Environmentalism Pacific Research Institute for Public Policy, Westview Press, Inc., 1991, Chapter 10.

170. See Macauley, Molly K., Bowes, Michael D and Palmer, Karen L., Using Economic Incentives to Regulate Toxic Substances, Resources for the Future, 1992. Chapter 4.

171. Marshall and Schram. In order to develop a tradeable permit for recycling, the federal government would set a minimum recycled content standard which entities would satisfy in one of two ways: either they would meet the standard or they would, like other programs, acquire permits to satisfy the difference.

172. See Tietenberg, Thomas H. "Transferable Discharge Permits and the Control of Stationary Source Air Pollution, from *Land Economics*, v.5 (1980) pp 391-416.

173. Tom Tietenberg, Environmental and Natural Resource Economics, (U.S.A.: Harper Collins Publishers, 1988).

174. Note that the ultimate allocation of permits will be driven by the market.

175. See Tietenberg (1980).

176. See Project 88 - Round II Incentives for Action: Designing Market-Based Environmental Strategies, A public policy study sponsored by Senator Tim Wirth and Senator John Heinz, Washington D.C. May 1991, Chapter 3.

177. Public costs are likely to approximate the costs of conventional command and control regulations. See U.S. Environmental Protection Agency, Economic Incentives: Options for Environmental Protection, Office of Policy, Planning and Evaluation, March 1991, 2IP-2001.

178. See U.S. Environmental Protection Agency, Economic Incentives: Options for Environmental Protection, Office of Policy, Planning and Evaluation, March 1991, 2IP-2001; and, Project 88 - Round II Incentives for Action: Designing Market-Based Environmental Strategies, A public policy study sponsored by Senator Tim Worth and Senator John Heinz, Washington D.C. May 1991, Chapter 3. for a further discussion of Deposit/Refund Systems.

179. See Tietenberg (1984) pages 164 and 174. Composition of demand is an incentive whereby consumers have a tendency to switch to products made with cheaper, recycled raw materials. Deposit/refund systems lower the costs of collection to recyclers thereby lowering the cost of processing. Theoretically, via a deposit/refund system, recycled materials may present industry with a more efficient alternative than virgin materials.

180. Also see Bohm, Peter. Deposit-Refund Systems: Theory and Application to Environmental, Conservation and Consumer Policy (Baltimore, Maryland: Johns Hopkins University Press for Resources for the Future), 1981.

181. See U.S. Environmental Protection Agency, Economic Incentives: Options for Environmental Protection, Office of Policy, Planning and Evaluation, March 1991, 2IP-2001; and, Federal Disincentives to Recycling, Office of Policy, Planning and Evaluation, Office of Policy Analysis, **Draft Report**: November, 1991.

182. As cited in the Federal Disincentives Report, U.S. EPA, and the Center for Economic Policy Analysis, Economic Incentives and Disincentives for Recycling of Municipal Solid Waste, Draft, December, 1988. Prepared for the Office of Technology Assessment.

183. As cited in the Federal Disincentives Report: Alice Rivlin, Chair of the Governing Council of the Wilderness Society and Senior Fellow in the Economic Studies Program of the Brookings Institute, Statement before the Senate Budget Committee, March 15, 1989, p.9.

184. Davis, Charles, Approaches to the Regulation of Hazardous Wastes Environmental Law, Volume 18, pp. 505-535.

APPENDIX A

The following examples illustrate opportunities for source reduction in industries that generate metal-bearing hazardous waste.

1. Change from Chromic Acid to Sulfuric Acid in an Aluminum Anodizing Operation (Material Substitution, Process Modification)[1]

An armament manufacturer (General Dynamics) in Pomona, CA reduced the volume and metal (chromium) content of an acid wastestream that presumably was classified as a hazardous waste.[2] The plant

> used chromic acid in the original aluminum anodizing process due to military contract specifications....This process, in spite of its higher operating costs, is used by the aerospace industry, the military, and military contractors.
>
> General Dynamic's motivation for converting to a sulfuric acid anodizing system was that its original chromic acid system could not be modified cost-effectively to meet production requirements and maintain compliance with current and anticipated air and water regulatory requirements. Besides the chemical substitution to eliminate chromium releases, the addition of automated hoists and the on-demand water bath rinse system helped to reduce wastewater treatment requirements....from approximately 15-20 gallons per minute...to approximately 6-8 gallons per minute.[3]

Assuming that during the substitution, the metals present in the wastestream as a result of the anodizing operation [if any] remained constant during the switch to sulfuric acid, then the company would have achieved a reduction in chromium present in the wastestream through the technique of materials substitution.

2. Removal of Cyanide from Plating Operations (Material Substitution)

Prior to 1986, a California electronic instrument manufacturer (Hewlett Packard, or HP) used zinc cyanide in its precision plating operations, and generated waste zinc cyanide when replacing the plating baths.[4] The company

> "attempted to treat this waste in the wastewater treatment plant. However, this wastestream caused significant operational difficulties for HP's treatment plant and the environmental manager chose to send the waste off-site for treatment and disposal. Because the zinc cyanide caused similar problems for the commercial treatment facility, this alternative was very expensive.
>
> For these reasons, HP staff committed themselves to developing a plating process that did not use cyanide. Since processing protocols require complex engineering to develop, HP had to overcome the inertia of established protocols and dedicate staff resources to find an appropriate alternative zinc compound that excluded cyanide.
>
> The HP process engineers were successful in their efforts. The new zinc compound is an effective plating medium with a much longer lifespan. Although the plating bath is periodically replenished, HP has not had to replace it since it implemented the process over a year ago. Moreover, HP believes that waste from this plating solution could easily be treated in its wastewater treatment plant. Therefore, the cost of off-site treatment/disposal has been eliminated. A total of 16,650 pounds of waste were disposed in 1986 at a total cost of $6,862. The cost of off-site treatment/disposal has increased to $0.82 per pound in 1987, creating an effective savings of $13,653..."[5]

3. Process Modifications at a Circuit Board Manufacturing Plant[6]

Also documented at the General Dynamics Pomona Division printed circuit board manufacturing plant are two process changes: eliminating process rinse tanks reduced rinsewaters from 60 gallons per minute to 10 gallons per minute, and initiating a copper-recovery technique for the process waste streams which consisted of ion exchange columns and "electrowinning" (generally, running electric current through a metal-bearing solution to capture the metal ions in a usable form); these changes resulted in cost savings with a payback period of 8.3 years.[7] For the purposes of this study, EPA is assuming that the wastewater treatment sludge that would have resulted from the higher rinsewater volume and from the copper that was recovered was classified as a hazardous waste.

4. Product Reformulation of Sealers in Automotive Body Repair Firm

KD Auto Body in Washington State won the Governor's Award for Outstanding Achievement in Pollution Prevention. One of the wastestreams that KD Auto Body reduced at the source was their sealers - their "yellow-based sealers" contained high levels of lead and chromium; they instead began using "gray-based sealers" which had lower lead and chromium concentrations, thus reducing their disposal costs.[8]

NOTES

1. Kathryn Barwick, et al. Economic Implications of Waste Reduction, Recycling, Treatment and Disposal of Hazardous Wastes: The Fourth Biennial Report, p. 24. California Department of Health Services, Toxic Substances Control Division, Alternative Technology Section, 1988; Johnny Springer, Pollution Prevention Case Studies Compendium, pp. 8 & 9. U.S. Environmental Protection Agency, Office of Research and Development, Risk Reduction Engineering Laboratory, Cincinnati, OH, EPA/600/R-92/046, 1992.

2. Either the waste met a listing in 40 CFR 261.31, or the waste was hazardous because of corrosivity (40 CFR 261.22) and/or toxicity (40 CFR 261.24).

3. Springer, Johnny. Pollution Prevention Case Studies Compendium, p. 8. U.S. Environmental Protection Agency, Office of Research and Development, Risk Reduction Engineering Laboratory, Cincinnati, OH, EPA/600/R-92/046, 1992.

4. Which possibly would be classified as F007 under the federal hazardous waste regulations at 40 CFR 261.31.

5. Barwick, pp. 17-18.

6. Springer, p.5.

7. It is unclear whether the process change described in this paragraph is the same process change documented in the California Department of Health Services Economic Implications... report.

8. Turning Point Newsletter (Volume 3, No. 1, p.2), published by EPA Region 10 in Seattle, WA.

APPENDIX B

This Appendix provides more specific information regarding the hazards associated with selected metals found in metal-bearing hazardous waste. These summaries were developed from sources cited in Section 3.3.2.

Lead

Lead is a silver-gray metal that is used in the production of storage batteries, solder, ammunition, ceramics and crystal glass, radiation shielding and other uses. Lead is an acute and chronic toxin. Acute toxic symptoms include headaches, convulsion, tremors and coma. Chronic exposure symptoms include affects to the central nervous system (restlessness, irritability, memory loss), kidney dysfunction, and changes to the liver (resulting from inhalation of lead dusts). Permanent brain damage in children has been observed from lead poisoning. Carcinogenicity in humans resulting from lead exposure has not been established. Exposure routes for lead include food, air and water. These routes are believed to account for 60 percent, 30 percent and 10 percent of blood lead levels in humans respectively. Lead behaves like calcium in the human body and bioaccumulates in the bones and teeth.

Blood lead levels (ug per 100 Ml) in people are reported in the following ranges: rural children, 7-11; urban children, 9-33; adults, 15-22; children living near a smelter 35-68. The following health effects have been observed at varying blood lead levels (ug per 100 mL) in humans: level of concern for fetal effects, 10-15; blood enzyme changes, 15-20; IQ deficiencies in children, <25; clinical anemia, children, 40; clinical anemia, adults, 80; reproductive effects in adults, 60; mental losses (writing and speech problems, mental retardation), 50-60; irreversible brain damage, 100.

Cadmium

Cadmium is a silver or bluish-white metal that is malleable and resistant to corrosion. It is used for the production of nickel-cadmium batteries, pigments, coating and painting, plastics and synthetic products, and alloys. It is both an acute and chronic toxin. Acute cadmium toxicity has been linked with chemical pneumonitis causing fatality. Additional symptoms of acute cadmium poisoning include nausea, vomiting and abdominal pain. The oral LD^{50} (lethal dose required to kill 50 percent of the mass of specimens) of cadmium for rats is 250 mg/kg.

Chronic exposures of cadmium are linked in humans to emphysema, chronic bronchitis, heart disease, anemia, kidney and liver disease. Cadmium caused kidney disease is the most well studied of these effects and is irreversible. Cadmium is classified as a probable human carcinogen and is linked with lung cancer in occupational studies. Evidence linking cadmium exposure to prostate cancer is less certain. Airborne cadmium may be attach to fly ash, dust, soil particles or sediments and stay in the atmosphere for a week or more. Cadmium deposition becomes absorbed in soils and water bodies where it enters the food chain. Food accounts for about 80 to 90 percent of the dose received by most people. Smoking is an additional source of exposure.

Cadmium is a trace contaminant in fertilizers that is slowly building up in agricultural soils. Literature reviewed in completion of this report states that might be one of the most important sources of cadmium exposure in the future. One of the main end uses proposed for cadmium-bearing hazardous wastes is either direct use as a fertilizer or reclamation for zinc to be used in a micronutrient in fertilizer.

Arsenic

Arsenic varies in form from a shiny gray metal to a white powder. It main uses are wood preservatives, hardening metals such as copper and lead, a doping agent in solid-state products of silicon and germanium. Arsenic salts are used in making herbicides, rodenticides, semiconductors and pyrotechnics.

Arsenic is both a acute and chronic toxic as well as a carcinogen. Arsenic is much more toxic in the inorganic form than the organic form. Ingestion of doses between 70 to 180 mg of arsenic may be fatal. Acute arsenic toxicity causes severe gastrointestinal damage causing shock, coma and death. Several hundred deaths from arsenic poisoning in food have been reported, but none in the United States. Chronic exposure to arsenic may lead to noncancerous lesions, peripheral nerve effects.

Arsenic is classified by both the International Agency for Research on Cancer (IARC) and the Cancer Assessment Group of EPA in the highest category of carcinogens. Arsenic is associated with a higher incidence of lung cancer through inhalation and liver, blood, skin and lung cancer through ingestion. Confirming the carcinogenicity of arsenic in animal experiments has been difficult.

Exposure to arsenic is occurs mainly through food (70 percent), however most of this is in the organic, inert form of the metal. Drinking water and air contribute smaller total amounts but a much higher proportion of the toxic inorganic form. High risk groups for arsenic exposure include children, smelter workers, farm workers and carpenters who work with wood preservatives.

Chromium

Chromium is a grayish, hard, lustrous metal. It is used in the production of steel alloys, metal plating, wood preservatives.

Chromium occurs in three forms in three forms: metal, trivalent (chromium III) and hexavalent (chromium VI). Hazards caused by chromium to human health and the environment come primarily from the hexavalent form. Hexavalent chromium is rapidly transformed in nature by organic matter to the trivalent form. Some of the literature reviewed reports that significant quantities of hexavalent chromium in nature are most likely to be the result from human sources. In addition to being the most toxic, hexavalent chromium is much more mobile in groundwater than trivalent chromium.

Acute chromium toxicity is rare. Only six cases have been reported since 1935, but most were fatal. Chronic chromium toxicity results in perforated and ulcerated nasal septa, inflammation of the nasal passages, nose bleeds, and skin ulcers and dermatitis. Chromium VI is believe to cause lung cancer. EPA classifies hexavalent chromium as Class A carcinogen indicating there is sufficient evidence to show it causes cancer in humans. Hexavalent chromium is also very toxic to plants and aquatic life. Water quality standards to protect aquatic life have been promulgated by EPA.

Steel production, fossil fuel combustion and chemical production account for most of chromium released to the air. Electroplating operations, textile manufacturing and leather tanneries are the main source of water release. Chromium chemical plants and chromite ore refineries are the largest source of chromium-bearing solid wastes (not necessarily subject to Subtitle C regulation).

Mercury

Mercury is a silvery-white metal that is liquid at room temperature. Mercury is used for electrical uses (thermostats, mercury switches), the manufacture of chlorine and caustic soda, dental amalgam, thermometers, batteries and light bulbs.

Mercury is a neurotoxin. Inorganic mercury such as metal mercury is less toxic than methylmercury. Symptoms of mild mercury exposure include memory loss, tremors, insomnia and a loss of appetite. At higher levels, mental disorders and motor disturbances and kidney damage result. High short term exposure leads to lung damage and death. High risk populations include workers exposed to mercury vapors (especially women), pregnant women, young children and people who consume large quantities of seafood products. Risk of cancer in humans from mercury has not been established.

Mercury evaporates readily once it is exposed to air. This problematic because of the risk of inhalation of mercury vapors and absorbed into the bloodstream. Mercury is also an ecotoxin to aquatic species including, fish, invertebrates and algae.

Nickel

Nickel is a white-silver lustrous hard metal used in the production of steel alloys, nickel-cadmium battery production, electroplating, petroleum catalysts, and household products. Inhalation of nickel dust may cause cancer of the lung, nasal passages and possibly the larynx, primarily through occupational exposure. Acute nickel toxicity is limited to exposure that is several thousand times the average daily does or linked with nickel carbonyl (a highly toxic nickel compound limited mainly to nickel refineries since it easily degrades to less toxic forms in the environment).

High risk groups for nickel include workers in nickel refining, stainless steel makers, welders, electroplaters, battery makers, jewelers, spray painters, paintmakers and varnish makers. It has been reported that 250,000 worked are exposed to nickel on the job. Although generally nickel has not been identified as causing a problem in the environment, it has been reported to biomagnify in aquatic flora and fauna.

Selenium

Selenium varies in physical form from a dark red to bluish-black amorphous solid to a dark red or grey crystal. Selenium is used in the manufacture of colored glass, photocells, semiconductors and rubber manufacture.

Although selenium is both an acute and chronic toxin, recorded cases of selenium poisoning in humans are rare. Acute selenium poisoning in Venezuela caused illness in natives ingesting selenium-rich nuts. Symptoms included vomiting, nausea and diarrhea. All patients recovered. Chronic selenium poisoning in China reports villagers had loss of hair and fingernails, disorders of the skin, nervous system and teeth. There are no recorded cases of selenium poisoning in the United States.

Selenium is an ecotoxin. There are reports of selenium rich irrigation water in California killing and causing birth defects in ducks and other waterfowl in the Kesterson Wildlife Preserve. Selenium intoxication of farm animals from grazing on plants grown in selenium rich soils has been recorded.

Zinc

Zinc metal is a bluish-white with a luster. It is mainly used as an alloy with copper and tin to make brass and bronze and as a galvanizing agent in metal plating. Although acute exposure through ingestion to zinc can cause nausea in humans, there is little risk of buildup over chronic exposures because the body efficiently excretes the metal. In contrast to ingestion, workers who inhale zinc oxide fumes may develop symptoms known as "metal fume fever". Short term effects include rapid breathing and chest pain usually lasting 2 to 3 days. Long term effects from such exposure are not known. Zinc is not associated with cancer in humans.

Zinc is an ecotoxin. Depressed plant growth, impaired aquatic life and waterfowl, and fish kills are associated with zinc releases from smelters and mine runoff. Zinc is also an essential mineral for human health and a micronutrient for plant and animal life. Zinc is used in micronutrient fertilizer formulations for agricultural commodities.

Barium

Barium is a silvery-white to a yellowish-white shiny, malleable metal. It is used in electric tubes and as a carrier for radium. Barium salts are used in paints, ceramics, lubricating oils, analytical work. Barium sulfate is the most common form of the metal in nature. Barium chloride is the most toxic form of the metal.

Barium is an acute toxin. Fatal doses in human are about 1 to 15 grams depending upon the compound. Barium ion is toxic to muscle. Absorption of barium causes sustained and prolonged contractions of muscles including the heart. Muscular weakness and paralysis of the limbs follow. No relationship between barium and cancer in humans has been established.

Beryllium

Beryllium is a gray metal. It is used for developing a copper alloy which goes into instruments, aircraft parts, and other components. Some beryllium is used in ceramics for high heat conductivity. Small quantities of pure beryllium metal are used in missile and rocket parts, aircraft, heat shields and nuclear weapons.

Beryllium is both an acute and chronic toxin; it mainly affects the lungs. Acute beryllium poisoning in humans causes pneumonitis, a chemically induced inflammation of the respiratory tract. Chronic beryllium exposure in humans cause berylliosis, an inflammatory lesion of the lungs. After a 25 year latency period, victims can develop fibrosis of the lungs, emphysema and death. Beryllium is known to cause cancer in animals. Although evidence is insufficient to establish the beryllium causes cancer in humans, it is suspected of causing lung cancer in humans. EPA classifies beryllium as a probable human carcinogen. Exposure routes of beryllium in humans are estimated at 70 percent drinking water, 30 percent from food with very little from air or dust.

Thallium

Thallium is a bluish-white, soft, fusible metal. Thallium is used in superconductor formulations, pharmaceuticals, photoelectric cells and low grade thermometers. Thallium salts are used as rodent poisons. Thallium is a by-product of zinc, copper and lead smelting. Thallium is highly toxic. Fatal doses of thallium in humans is about 500 mg. Chronic toxicity can cause liver and kidney damage. Patnaik reports that ingestion of thallium salts in children has caused neurological abnormalities, mental retardation and psychoses.

NOTES