Part V
Ensuring Long-Term Protection

Chapter 9
Monitoring Performance

Contents

I. Ground-Water Monitoring ..... 9 - 2
A. Hydrogeological Characterization ..... 9 - 2
B. Monitoring Methods ..... 9 - 4
1. Conventional Monitoring Wells ..... 9 - 4
2. Direct-Push Ground-Water Sampling ..... 9 - 4
3. Geophysical Methods ..... 9 - 5
C. Number of Wells ..... 9 - 6
D. Lateral and Vertical Placement of Wells ..... 9 - 7
1. Lateral Placement ..... 9 - 7
2. Vertical Placement and Screen Lengths ..... 9 - 8
E. Monitoring Well Design, Installation, and Development ..... 9 - 9
1. Well Design ..... 9 - 9
2. Well Installation ..... 9 - 12
3. Well Development ..... 9 - 12
F. Duration and Frequency of Monitoring ..... 9 - 13
G. Sampling Parameters ..... 9 - 13
H. Potential Modifications to a Basic Ground-Water Monitoring Program ..... 9 - 14
1. Duration and Frequency of Monitoring ..... 9 - 14
2. Sampling Parameters ..... 9 - 16
3. Vadose-Zone Monitoring ..... 9 - 16

II. Surface-Water Monitoring ..... 9 - 21
A. Monitoring Storm-Water Discharges ..... 9 - 22
B. Monitoring Discharges to POTWs ..... 9 - 25
C. Monitoring Surface Water Conditions ..... 9 - 26

III. Soil Monitoring ..... 9 - 28
A. Determining the Quality of Soil ..... 9 - 29
B. Sampling Location and Frequency ..... 9 - 30
C. Sampling Equipment ..... 9 - 31
D. Sample Collection ..... 9 - 31

IV. Air Monitoring ..... 9 - 32
A. Types of Air Emissions Monitoring ..... 9 - 33
1. Emissions Monitoring ..... 9 - 33
2. Ambient Monitoring ..... 9 - 33
3. Fugitive Monitoring ..... 9 - 34
4. Meteorological Monitoring ..... 9 - 34

Contents

B. Air Monitoring and Sampling Equipment ..... 9 - 36
1. Ambient Air Monitoring ..... 9 - 36
2. Source Emissions Monitoring ..... 9 - 37
C. Test Method Selection ..... 9 - 38
D. Sampling Site Selection ..... 9 - 38

V. Sampling and Analytical Protocols and Quality Assurance and Quality Control ..... 9 - 39
A. Data Quality Objectives ..... 9 - 41
B. Sample Collection ..... 9 - 41
C. Sample Preservation and Handling ..... 9 - 42
D. Quality Assurance and Quality Control ..... 9 - 42
E. Analytical Protocols ..... 9 - 44

VI. Analysis of Monitoring Data, Contingency Planning, and Assessment Monitoring ..... 9 - 45
A. Statistical Approaches ..... 9 - 45
B. Contingency Planning ..... 9 - 46
C. Assessment Monitoring ..... 9 - 46

Monitoring Performance Activity List ..... 9 - 48

Resources ..... 9 - 50

Tables:
Table 1: Factors Affecting Number of Wells Per Location ..... 9 - 9
Table 2: Potential Parameters for Basic Groundwater Monitoring ..... 9 - 15
Table 3: Recommended Components of a Basic Ground-Water Monitoring Program ..... 9 - 16
Table 4: Comparison of Manual and Automatic Sampling Techniques ..... 9 - 24
Table 5: Types of QA/QC Samples ..... 9 - 43

Figures:
Figure 1: Cross-Section of a Generic Monitoring Well ..... 9 - 5
Figure 2: Major Methods for In Situ Monitoring of Soil Moisture or Matrix Potential ..... 9 - 18
Figure 3: Example Methods for Collecting Soil-Pore Samples ..... 9 - 19
Figure 4: Soil Gas Sampling Systems ..... 9 - 20
Figure 5: Schematic Diagram of various Types of Sampling Systems ..... 9 - 36
Figure 6: Sampling Train ..... 9 - 38

Monitoring Performance

This chapter will help you:

- *Carefully design and implement a monitoring program that is essential to evaluating whether a unit meets performance objectives and whether there are releases to, and impacts on, the surrounding environment that need to be corrected.*
- *Design effective monitoring programs that protect the environment, improve unit performance, and help reduce long-term costs and liabilities associated with industrial waste management.*

Monitoring the performance of a waste management unit is an integral part of a comprehensive waste management system. A properly implemented monitoring program provides an indication of whether a waste management unit is functioning in accordance with its design, and detects any changes in the quality of the environment caused by the unit. The detection information obtained from a monitoring program can be used to ensure that the proper types of wastes are being managed in the unit, discover and repair any damaged area(s) of the unit, and determine if an alternative management approach might be appropriate. By implementing a monitoring program, facility managers can identify problems or releases in a timely fashion and take the appropriate measures to limit contamination. Continued detection of contamination in the environment could result in the implementation of more aggressive corrective action measures to remediate releases.

This chapter will address the following questions.

- What site characterizations are needed to develop an effective monitoring program?
- What are the basic elements of a monitoring program?
- How should sampling and analytical protocols be used in a monitoring program?
- What procedures should be used to evaluate monitoring data?
- What elements of the basic monitoring program can be modified to address site conditions?

This chapter highlights issues associated with establishing a ground-water monitoring program because most industrial waste management units need to have such a program. The chapter also provides a discussion of air, surface water, and soil monitoring that might be applicable to some units managing industrial waste. You should consult with qualified professionals, such as engineers and ground-water specialists,[1] for technical assistance in making decisions about the design and operation of a ground-water monitoring program. In

[1] For the purpose of this chapter, a qualified "ground-water specialist" refers to a scientist or engineer who has received a baccalaureate or post-graduate degree in the natural sciences or engineering and has sufficient training and experience in ground-water hydrology and related fields as demonstrated by state registration, professional certifications, or completion of accredited university programs that enable that individual to make sound professional judgements regarding ground-water monitoring, contaminant fate and transport, and corrective action.

addition when questions arise concerning soil, air, or surface-water monitoring, you should also consult specialists in these areas as each media requires different expertise.

I. Ground-Water Monitoring

The basic elements of a ground-water monitoring program include:

- The monitoring method.
- The number of wells.
- Location and screened intervals of wells.
- Well design, installation, and development.
- The duration and frequency of monitoring.
- Sampling parameters to be monitored.

The remainder of this section provides a brief overview of the six basic elements of a ground-water monitoring program, along with a discussion of the importance of a hydrogeological characterization.

A. Hydrogeological Characterization

An accurate hydrogeological characterization is the foundation of an effective ground-water monitoring system. The goal of a hydrogeological characterization is to acquire site-specific data to enable the development of an appropriate ground-water monitoring program for a site. In some instances, a complete hydrogeological characterization might not be necessary due to the type of unit being considered, the type of waste being managed, or the climate. The design of the ground-water monitoring program should be based upon the following site-specific data:

Why is it important to use a qualified professional?

- Site characterizations can be extremely complex.
- Incorrect or incomplete characterizations could result in inaccurate detection of contamination in the ground water due to improper placement of ground-water monitoring wells and can cost a significant amount of money. Incorrect or incomplete characterizations could also result in the installation of unnecessary monitoring wells at significant cost.
- You should always use a qualified professional to conduct site characterizations. Check to see if the professional has sufficient training and experience in ground-water hydrology and related fields, as demonstrated by state registration, professional certification, or completion of accredited university programs. These professionals should be experienced at analyzing ground-water flow and contaminant fate and transport and at designing ground-water monitoring systems. Ensure that these professionals are familiar with the contaminants in the waste and thoroughly check their references.

- The lateral and vertical extent of the uppermost aquifer.
- The lateral and vertical extent of the upper and lower confining units/layers.
- The geology at the waste management unit's site, such as stratigraphy, lithology, and structural setting.
- The chemical properties of the uppermost aquifer and its confining layers

relative to local ground-water chemistry and wastes managed at the unit.

- Ground-water flow, including:
  - The vertical and horizontal directions of ground-water flow in the uppermost aquifer.
  - The vertical and horizontal components of the hydraulic gradient in the uppermost aquifer and any hydraulically connected aquifer.
  - The hydraulic conductivities of the materials that comprise the uppermost aquifer and its confining units/layers.
  - The average linear horizontal velocity of ground-water flow in the uppermost aquifer.

To perform a hydrogeological characterization and develop an understanding of a site's hydrogeology, a variety of sources and kinds of information should be considered.

- **Existing information.** This can include the history of the site, including documented records describing wastes managed on site and releases. This information can help you characterize the area of the waste management unit and better understand background conditions. Some hydrogeological information might also have been developed in the past, for example during the siting process (see Chapter 4–Considering the Site). It might be useful to conduct literature reviews for research performed in the area of the unit and examine federal and state geological and environmental reports related to the site or to the region where the site is to be located. This review can often assist in better understanding the overall site geology and ground-water flow beneath the unit.
- **Site geology.** A geologic unit is typically considered to be any distinct or definable native rock or soil stratum. Characterize thickness, stratigraphy, lithology, and hydraulic characteristics of saturated and unsaturated geologic units and fill materials overlying the uppermost aquifer, in the uppermost aquifer, and in the lower confining unit of the uppermost aquifer using soil borings, drilling, or geophysical methods. Conventional soil borings are typically used to characterize onsite soils through direct sampling. Geophysical equipment, such as ground-penetrating radar, electromagnetic detection equipment, and electrical resistivity arrays, can provide non-invasive measurements of physical, electrical, or geochemical properties of the site. Understanding the different strata can help identify the appropriate ground-water monitoring well locations and screen depths.
- **Ground-water flow beneath the site.** Across the United States, ground-water flow velocities range from several feet to over 2,000 feet per year. To determine hydraulic gradient and flow rate, you should implement a water-level monitoring program and estimate hydraulic conductivity. This program should include measurements of seasonal and temporal fluctuations in flow, the effect of site construction and operations on ground-water flow direction, and variations in ground-water elevation. Information on water-level monitoring programs and procedures for obtaining accurate water level measurements can be found in EPA's *Municipal Solid Waste Landfill Technical Guidance Document* (U.S. EPA, 1988).

The level of effort one employs to characterize a site sufficiently to design an adequate ground-water monitoring system depends on the geologic and hydrogeologic complexity of the site. The complexity of a site should not be assumed; a soil boring program can help determine the complexity of a site's hydrogeology. The American Society for Testing and Materials' (ASTM) *Annual Book of ASTM Standards*[2] provides more than 80 guides and practices related to waste and site characterization and sampling. For additional information on ground-water monitoring, see EPA's *Ground-Water Monitoring: Draft Technical Guidance* (U.S. EPA, 1993a) and *Solid Waste Disposal Facility Criteria: Technical Manual* (U.S. EPA, 1993b).

B. Monitoring Methods

Ground-water monitoring usually involves the installation of permanent monitoring wells for periodic collection of ground-water samples. Waste constituent migration can be monitored by sampling ground water for either contaminants or geophysical parameters. Ground water also can be sampled through semi-permanent conventional monitoring wells or by temporary direct-push sampling. Conventional monitoring wells, direct-push sampling, and geophysical methods are described below.

1. Conventional Monitoring Wells

The conventional monitoring well is the most common type used to target a single screened interval. Figure 1 presents an illustration of a single screened interval. Specific construction features are described in more detail below. The conventional monitoring well is semi-permanent, meaning it can be used for sampling over an extended period of time and should be located by professionally surveyed reference points. To monitor more than one depth at a single location, you should install conventional monitoring wells in clusters or with multilevel sampling devices.

2. Direct-Push Ground-Water Sampling

Using the direct-push technique, ground water is sampled by hydraulically pressing and/or vibrating a probe to the desired depth and retrieving a ground-water sample through the probe. The probe is removed for reuse elsewhere after the desired volume of ground water is extracted. It is important to clean the probe with an appropriate decontamination protocol after each use to avoid potential cross-contamination.

What are the benefits of direct-push sampling?

Given favorable geology, the direct-push method of ground-water sampling can be a simpler and less expensive alternative to conventional wells. Conventional monitoring wells, because they are semi-permanent, generally cost more and take longer to install. Direct-push technology, however, does not provide a semi-permanent structure from which to sample the ground water over an extended period of time, as do conventional wells. Also, some states only allow the use of direct-push technology as an initial screening technique or as a complement to conventional monitoring wells.

In sandy aquifers, however, the direct-push technology can be used to install a well similar to a conventional monitoring well. Relatively recent advances in direct-push technology use pre-packed screens with grouts and seals attached to a metal pipe that are driven into the ground, forming an assembly similar to a conventional well. The appropriate state agency will be able to tell you whether direct-push well installations are acceptable.

[2] ASTM's *Annual Book of ASTM Standards* is available in hard copy or on CD-ROM through ASTM's online bookstore at **<www.astm.org>**.

Figure 1. Cross-Section of a Generic Monitoring Well

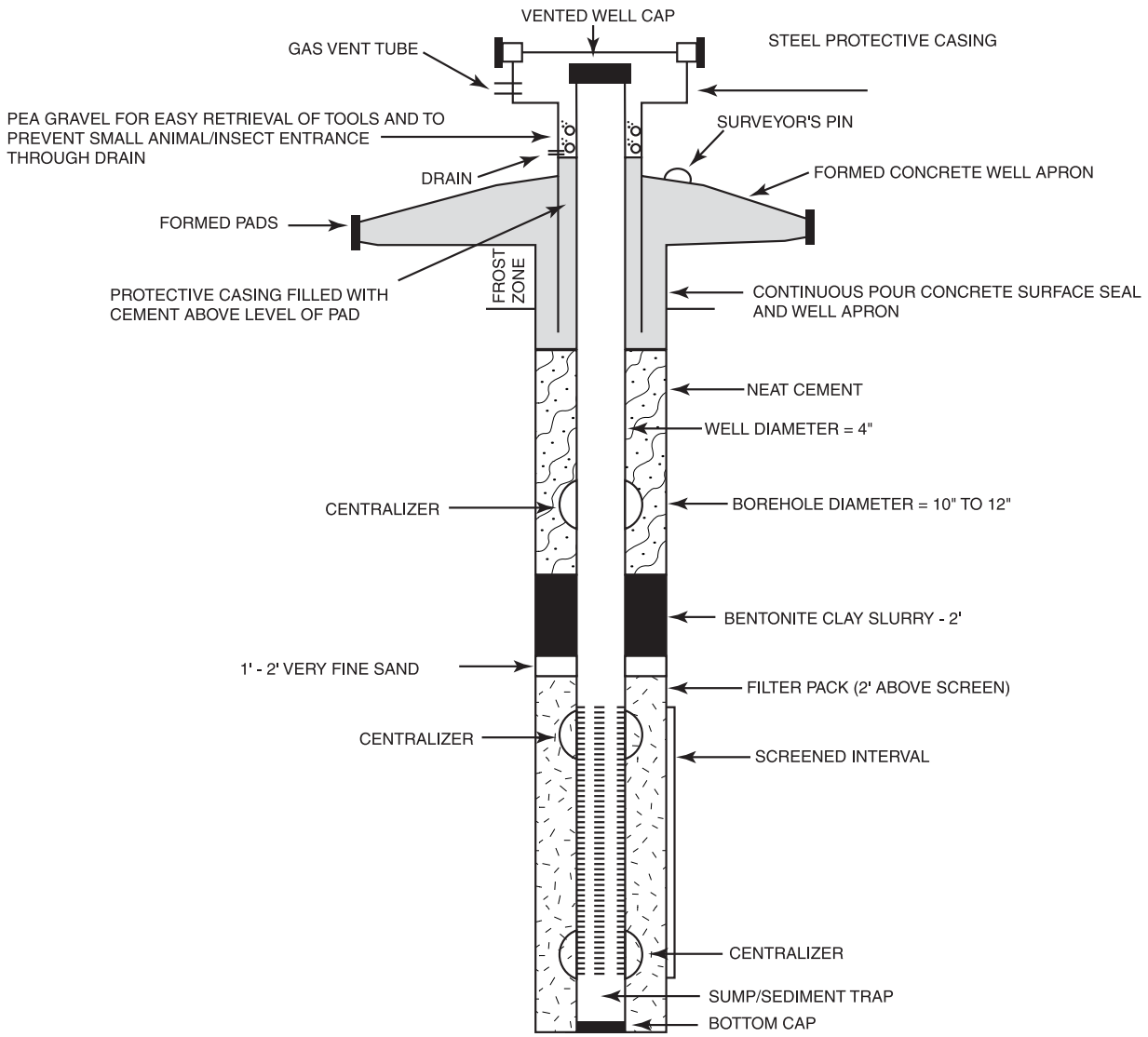

Source: U.S. EPA, 1993a

3. *Geophysical Methods*

Geophysical methods measure potential changes in ground-water quality by measuring changes in the geophysical characteristics of the sub-surface soils, and in some cases, in the ground water itself. For example, increases in the levels of certain soluble metals in ground water can change the resistive properties of the ground water, which can be measured using surface resistive technologies. Similarly, changes in the resistive properties of the vadose zone might indicate the migration of leachate toward ground water.

Geophysical characteristics, such as DC-resistivity, electromagnetic induction, pH, and temperature, can provide important preliminary indications of the performance of the liner system design. You should consult with the appropriate state agency regarding the use of a geophysical method. (See *Subsurface Characterization and Monitoring Techniques* (U.S. EPA, 1993) for additional information on the use of geophysical methods).

How useful is geophysical method data?

Geophysical methods are more commonly used to map the initial extent of contamination at waste management units than for ongoing monitoring. Initial monitoring data can guide the placement of permanent monitoring wells for ongoing monitoring. As discussed later, geophysical methods, used in conjunction with ground-water monitoring, can reduce the frequency of well sampling, which could reduce monitoring costs. The usefulness of geophysical methods, however, will depend on the local hydrogeology, the contaminant concentration levels, and type of contaminants.

C. Number of Wells

It is recommended that a ground-water monitoring system have a minimum of one upgradient (or background) monitoring well, and three downgradient monitoring wells to make statistically meaningful comparisons of ground-water quality. The upgradient or background well(s) permit the assessment of the background quality of onsite ground water. The downgradient wells permit detection of any contaminant plumes from a waste management unit. The actual number of upgradient and downgradient wells will vary from unit to unit depending on the actual site-specific conditions. The actual number of upgradient and downgradient monitoring wells and their distribution will influence the selection of appropriate statistical method. If an insufficient number of background wells are used, the use of an inter-well evaluation might not be possible. Site-specific conditions that influence the number of upgradient and downgradient wells include:

- Geology of the waste management unit site.
- Ground-water flow direction and velocity, including seasonal and temporal fluctuations.
- Permeability or hydraulic conductivity of any water-bearing formations.
- Physical and chemical characteristics of contaminants.
- Area of waste management unit.

The number of wells is dependent on the lateral and vertical placement of monitoring wells, which is determined by the geology and hydrogeology of the site. Other factors influencing the number of wells include the number of potential contaminant migration pathways; the spatial distribution of potential contaminant migration pathways; and the depth and thickness of stratigraphic horizons that can serve as contaminant migration pathways. The number of wells needed will also vary according to the need for samples from different depths in the aquifer. This is a function of hydrogeologic factors and the chemical and physical characteristics of contaminants. The next section provides a detailed discussion of the lateral and vertical placement of monitoring wells.

A larger number of monitoring wells might be needed at sites with complex hydrogeology. If a site has multiple waste management units, use of a multi-unit ground-water monitoring system can reduce the necessary number of wells. You should consult with the appropriate state agency when determining a site's ground-water monitoring well requirements.

D. Lateral and Vertical Placement of Wells

The lateral and vertical placement of monitoring wells is very site-specific. (Monitoring wells should yield ground-water samples from the targeted aquifer(s) that are representative of both the quality of background ground water and the quality of ground water at a downgradient monitoring point.) Locate monitoring wells at the closest practicable distance from the waste management unit boundary to detect contaminants before they migrate away from the unit. Early detection provides a warning of potential waste management unit design failure and allows time to implement appropriate abatement measures and potentially eliminate the need for more extensive corrective action. It also reduces the area exposed and can limit overall liability.

1. Lateral Placement

Monitoring wells should be placed laterally along the down-gradient edge of the waste management unit to intercept potential contaminant migration pathways. Ground-water flow direction and hydraulic gradient are two major determining factors in monitoring well placement. Placement of monitoring wells should also take into account the number and spatial distribution of potential contaminant migration pathways and the depths and thickness of stratigraphic horizons that can serve as contaminant migration pathways. In homogeneous, isotropic hydrogeologic sites, ground-water flow direction and hydraulic gradient, along with the potential contaminant's chemical and physical characteristics, will primarily determine lateral well placement. In a more complex site where hydrogeology and geology are variable and preferential pathways exist, (a heterogeneous, anisotropic hydrogeologic site, for example) the well placement determination becomes more complex. Potential migration pathways are influenced by site geology including changes in hydraulic conductivity, fractured or faulted zones, and soil chemistry. Human-made features that influence ground-water flow should also be considered. These features include ditches, filled areas, buried piping, buildings, leachate collection systems, and other adjacent disposal units.

Another point of consideration is seasonal change in ground-water flow. Seasonal changes in ground-water flow can result from seasonal changes in precipitation patterns, tidal influences, lake or river stage fluctuations, well pumping, or land use pattern changes. At some sites it might even be possible that ground water flows in all directions from a waste management unit. These contingencies might call for placement of monitoring wells in a circular pattern to monitor on all sides of the waste management unit. Seasonal fluctuations might cause certain wells to be downgradient only part of the time, but such configurations ensure that releases will be detected.

Lateral placement of monitoring wells also depends upon the chemical and physical characteristics of a waste management unit's constituents. Consider potential contaminant characteristics such as solubility, Henry's law constant, partition coefficients, specific gravity (density), potential for natural attenuation and the resulting reaction or degradation products, and the potential for contaminants to degrade confining layers. A dense non-aqueous phase liquid (DNAPL), for instance, because of its density might not necessarily migrate only in the direction of the ground-water flow. The presence of DNAPLs, therefore, can result in placing wells in more locations than just the normal downgradient sites.

2. Vertical Placement and Screen Lengths

Similar to lateral placement, vertical well placement in the ground water around a waste management unit is determined by geologic and hydrogeologic factors, as well as the chemical and physical characteristics of the potential contaminants. The vertical placement of each well and its screen lengths will be determined by the number and spatial distribution of potential contaminant migration pathways and the depth and thickness of potential migration pathways. Site-specific geology, hydrogeology, and constituent characteristics influence the location, size, and geometry of potential contaminant plumes, which in turn determine monitoring well depths and screen lengths.

The chemical and physical characteristics of potential contaminants from a waste management unit play a significant role in determining vertical placement. The specific properties of a particular contaminant will determine what potential migration pathway it might take in an aquifer. The specific characteristics of a contaminant, such as its solubility, Henry's law constant, partition coefficients, specific gravity (density), potential for natural attenuation and the resulting reaction or degradation products, and the potential for contaminants to degrade confining layers, will all influence the vertical placement and screen lengths of a unit's monitoring wells. A DNAPL, for instance, will sink to the bottom of an aquifer and migrate along geologic gradients (rather than hydrogeologic gradients), thus a monitoring well's vertical placement should correspond with the depth of the appropriate geologic feature. LNAPLs (light non-aqueous phase liquids), on the other hand, would move along the top of an aquifer, and result in placement of wells and wells screens at the surface of the aquifer.

Well screen lengths are also determined by site- and constituent-specific parameters. These parameters and the importance of taking vertically discrete ground-water samples, factor into the determination of well screen size. Highly heterogeneous (complex) geologic sites require shorter well screen lengths to allow for the sampling of discrete migration pathway. Screens that span more than a single contaminant migration pathway can cause cross contamination, possibly increasing the extent of contamination. Shorter screen lengths allow for more precise monitoring of the aquifer or the portion of the aquifer of concern. Excessively large well screens can lead to the dilution of samples making contaminant detection more difficult.

The depth or thickness of an aquifer also influences the length of the well screen. Sites with highly complex geology or relatively thick aquifers might require multiple screens at varying depths. Conversely, a relatively thin and homogenous aquifer might allow for fewer wells with longer screen lengths. Table 1 below summarizes the recommended factors to consider when determining the number of wells needed per sampling location.

You should consult with state officials on the lateral and vertical placement of monitoring wells including well screening lengths. In the absence of specific state requirements, it is recommended that the monitoring points be no more than 150 meters downgradient from a waste management unit boundary, on facility property, and placed in potential contamination migration pathways. This maximum distance is consistent with the approach taken in many states in order to protect waters of the state.

Table 1
Factors Affecting Number of Wells Per Location (CLUSTER)

One Well per Sampling Location	More Than One Well Per Sampling Location
No light non-aqueous phase liquids (LNAPLs) or dense non-aqueous phase liquids (DNAPLs) (immiscible liquid phases)	Presence of LNAPLs or DNAPLs
Thin flow zone (relative to screen length) Horizontal flow predominates	Thick flow zones Vertical gradients present
Homogeneous isotropic uppermost aquifier, simple geology	Heterogeneous anisotropic uppermost aquifier, complicated geology - multiple, interconnected aquifiers - variable lithology - perched water zones - discontinuous structures Discrete fracture zones in bedrock Solution conduits, such as caves, in karst terrains Cavernous basalts

E. Monitoring Well Design, Installation, and Development

Ground-water monitoring wells are tailored to suit the hydrogeologic setting, the type of constituents to be monitored, the overall purpose of the monitoring program, and other site-specific variables. You should consult with the appropriate state agency and qualified professionals to discuss the design specifications for ground-water monitoring wells before beginning construction. Figure 1 illustrates the design components that are discussed in this section. The *Annual Book of ASTM Standards* includes guides and practices related to monitoring well design, construction, development, maintenance, and decommissioning. EPA's *Handbook of Suggested Practices for the Design and Installation of Ground-Water Monitoring Wells* (U.S. EPA, 1989) also contains this information.

1. Well Design

The typical components of a monitoring well include a well casing, a well intake, a filter pack, an annular and surface seal, and surface completion. Each of these components is briefly described below.

Well Casing

The well casing is a pipe which is installed temporarily or permanently to counteract caving and to isolate the zone being monitored. The well casing provides access from the surface of the ground to some point in the subsurface. The casing, associated seals, and grout prevent borehole collapse and interzonal hydraulic communication. Access to the monitored zone is through the casing and either the screened intake or the open borehole. (Note: some states do not allow the use of open borehole monitoring wells. Check with the state agency to determine whether this type of monitoring well design is acceptable.) The casing thus permits piezometric head measurements and ground-water quality sampling.

A well casing can be made of an appropriate rigid tubular material. The most frequently evaluated characteristics that directly influence the performance of casing material in ground-water monitoring applications are strength, chemical resistance, and interference. The monitoring well casing should be strong enough to resist the forces exerted on it by the surrounding geologic materials and the forces imposed on it during installation. Casings should exhibit structural integrity for the expected duration of the monitoring program under natural and man-induced subsurface conditions. Well casing materials should also be durable enough to withstand galvanic or electrochemical corrosion and chemical degradation. Metallic casing materials are most subject to corrosion and thermoplastic casing materials are most subject to chemical degradation. In addition, casing materials should not exhibit a tendency to either sorb chemical constituents from (i.e., take constituents out of solution by either adsorption or absorption) or leach chemical constituents into the water that is sampled from the well. If casing materials sorb selected constituents, the water-quality sample will not be representative.

The three most common types of casing materials are fluoropolymer materials, including polytetrafluoroethylene (PTFE) and tetrafluoroethylene (TFE); metallic materials, including carbon steel, galvanized steel, and stainless steel; and thermoplastic materials, including polyvinyl chloride (PVC) and acrylonitrile butadiene styrene (ABS). Threaded, flush casing joints that do not require glue should be used. Another option is the use of PTFE tape or o-rings at the threaded joints.

Well Screen

A well screen is a filtering device used to retain the primary or natural filter pack; it is usually a cylindrical pipe with openings of a uniform width, orientation, and spacing. It is often important to design the monitoring well with a well intake (well screen) placed opposite the zone to be monitored. The intake should be surrounded by materials that are coarser, have a uniform grain size, and have a higher permeability than natural formation material. This allows ground water to flow freely into the well from the adjacent formation material while minimizing or eliminating the entrance of fine-grained materials, such as clay or sand, into the well.

A well screen design should consider: intake opening (slot) size, intake length, intake type, and corrosion and chemical-degradation resistance. Proper sizing of monitoring well intake openings is one of the most important aspects of monitoring well design. The selection of the length of a monitoring well intake depends on the purpose of the well. Most monitoring wells function as both ground-water sampling points and piezometers[3] for a discrete interval. To accomplish these objectives, well intakes are typically 2 to 10 feet in length and only rarely equal or exceed 20 feet in length. The hydraulic efficiency of a well intake depends primarily on the amount of open area available per unit length of intake. The amount of open area in

[3] A piezometer is a non-pumping well, generally of small diameter, used to measure the elevation of the water table.

a well intake is controlled by the type of well intake it is and its opening size. Many types of well intakes have been used in monitoring wells, including: the louvered (shutter-type) intake, the bridge-slot intake, the machine-slotted well casing, and the continuous-slot wire-wound intake.

Filter Pack

Filter pack is the material placed between the well screen and the borehole wall that allows ground water to flow freely into the well while filtering out fine-grained materials. It is important to minimize the distortion of the natural stratigraphic setting during construction of a monitoring well. Hence, it might be necessary to filter-pack boreholes that are over-sized with regard to the casing and well intake diameter. The filter pack prevents formation material from entering the well intake and helps stabilize the adjacent formation. The filter-pack materials should be chemically inert to avoid the potential for alteration of ground-water sample quality. Commonly used filter-pack materials include clean quartz sand, gravel, and glass beads. You should check with the state regulatory agency to determine if state regulations specify filter pack grain size, either in absolute terms or relative to the grain size of the water bearing zone, or a uniformity coefficient.

The filter pack should generally extend from the bottom of the well intake to approximately two to five feet above the top of the well intake, provided the interval above the well intake does not result in a hydraulic connection with an overlying zone. To ensure that filter pack material completely surrounds the screen and casing without bridging, the filter pack can be placed with a tremie pipe (a small diameter pipe that carries the filter pack material directly to the filter screen without creating air pockets within the filter pack). A layer of fine sand can also be placed on top of the filter pack to minimize migration of annular seal material (see below) into the filter pack.

Annular Seal

Annular space is the space between the casing and the borehole wall. Any annular space that is produced as a result of the installation of well casing in a borehole provides a channel for vertical movement of water and/or contaminants unless the space is sealed. The annular seal in a monitoring well is placed above the filter pack in the annulus between the borehole and the well casing. The seal serves several purposes: to provide protection against infiltration of surface water and potential contaminants from the ground surface down the casing/borehole annulus; to seal off discrete sampling zones, both hydraulically and chemically; and to prohibit vertical migration of water. Such vertical movement can cause “cross contamination” which can influence the representativeness of ground-water samples. The annular seal can be comprised of several different types of permanent, stable, low-permeability materials including pelletized, granular, or powdered bentonite; neat cement grout; and combinations of both. The most effective seals are obtained by using expanding materials that will not shrink away from either the casing or the borehole wall after curing or setting.

Surface Seal

A surface seal is an above-ground seal that protects a monitoring well from surface water and contaminant infiltration. Monitoring wells should have a surface seal of neat cement or concrete surrounding the well casing and filling the annular space between the casing and the borehole at the surface. The surface seal can be an extension of the annular seal installed above the filter pack, or it can be a separate seal placed on top of the annular

seal. The surface seal will generally extend to at least three feet away from the well casing at the surface and taper down to the size of the borehole within a few feet of the surface. In climates with alternating freezing and thawing conditions, the cement surface should extend below the frost depth to prevent potential well damage caused by frost heaving.

Surface Completions

Surface completions are protective casings installed around the well casing. Two types of surface completions are common for ground-water monitoring wells: above-ground completion, and flush-to- ground completion. The primary purposes of either type of completion are to prevent surface runoff from entering and infiltrating down the annulus of the well and to protect the well from accidental damage or vandalism.

In an above-ground completion, which is the preferred alternative, a protective casing is generally installed around the well casing by placing the protective casing into the cement surface seal while it is still wet and uncured. The protective casing discourages unauthorized entry into the well, prevents damage by contact with vehicles, and reduces degradation caused by direct exposure to sunlight. The protective casing should be fitted with a locking cap and installed so that there are at least one to two inches clearance between the top of the in-place, inner well, casing cap and the bottom of the protective casing locking cap when in the locked position.

Like the inner well casing, the outer protective casing should be vented near the top to prevent the accumulation and entrapment of potentially explosive gases and to allow water levels in the well to respond naturally to barometric pressure changes. Additionally, the outer protective casing should have a drain hole installed just above the top of the cement level in the space between the protective casing and the well casing. This drain allows trapped water to drain away from the casing. In high-traffic areas or in areas where heavy equipment might be working, consider the installation of additional protection such as “bumper guards.” Bumper guards are brightly-painted posts of wood, steel, or some other durable material set in cement and located within three or four feet of the well.

2. *Well Installation*

To ensure collection of representative ground-water samples, the well intake, filter pack, and annular seal need to be properly installed. In cohesive unconsolidated material or consolidated formations, well intakes should be installed as an integral part of the casing string by lowering the entire unit into the open borehole and placing the well intake opposite the interval to be monitored. Centralizing devices are typically used to center the casing and intake in the borehole to allow uniform installation of the filter pack material around the well intake. In non-cohesive, unconsolidated materials there are other standardized techniques to ensure the proper installation of wells, such as the use of a casing hammer, a cable tool technique, the dual-wall reverse-circulation method, or installation through the hollow stem of a hollow-stem auger.

3. *Well Development*

Monitoring well development is the removal of fine particulate matter, commonly clay and silt, from the geologic formation near the well intake. If particulate matter is not removed, as water moves through the formation into the well, the water sampled will be turbid, and the viability of the water quality analyses will be impaired. When pumping during well development, the movement of water is unidirectional toward the well. Therefore, there is a tendency for the particu-

lates moving toward the well to "bridge" together or form blockages that restrict subsequent particulate movement. These blockages can prevent the complete development of the well capacity. This effect potentially impacts the quality of the water entering the well. Development techniques should remove such bridges and encourage the movement of particulates into the well. These particulates can then be removed from the well by bailer or pump and, in most cases, the water produced will subsequently be clear and non-turbid.

In most instances, monitoring wells installed in consolidated formations can be developed without great difficulty. Monitoring wells also can usually be developed rapidly and without great difficulty in sand and gravel deposits. However, many installations are made in thin, silty, and/or clayey zones. It is not uncommon for these zones to be difficult to develop sufficiently for adequate samples to be collected.

F. Duration and Frequency of Monitoring

The duration of ground-water monitoring will depend on the length of the active life of the waste management unit and its post-closure care period. Continued monitoring after a waste management unit has closed is important because the potential for contaminant releases remains even after a unit has stopped receiving waste. Monitoring frequency should be sufficient to allow detection of ground-water contamination. This frequency usually ranges from quarterly to annually.

What site characteristics should be evaluated to determine the frequency of monitoring?

Ground-water flow velocity is important in establishing an appropriate ground-water monitoring frequency to ensure that samples collected are physically and statistically independent. For example, in areas with high ground-water flow velocity, more frequent monitoring might be necessary to detect a release before it migrates and contaminates large areas. In areas with low flow velocity, less frequent monitoring might be appropriate. It is important to analyze background ground-water conditions, such as flow direction, velocity, and seasonal fluctuations to help determine a suitable monitoring frequency for a site. You should consult with the appropriate state agency to determine an appropriate monitoring frequency. In the absence of state requirements, it is recommended that semi-annual monitoring be conducted to detect contamination as part of a basic monitoring program.

G. Sampling Parameters

Selection of parameters to be monitored in a ground-water monitoring program should be based on the characteristics of waste in the management unit. Additional sampling and analysis information can be found in EPA *SW-846 Test Methods for Evaluating Solid Waste* (U.S. EPA, 1986) and in ASTM's standards. The *Annual Book of ASTM Standards* also identifies 18 ASTM guides and practices for performing waste characterization and sampling.

What are sampling parameters?

Analyzing a large number of ground-water quality parameters in each sampling episode can be costly. To minimize expense, select only contaminants and geochemical indicators that can be reasonably expected to migrate to the ground water. These are called sampling parameters. Sampling parameters should provide an early indication of a release from a waste management unit. Once contamination is detected, consider expanding the original

sampling parameters and monitor for additional constituents to fully characterize the chemical makeup of the release.

What sampling parameters should be used?

Due to the broad universe of industrial solid waste, it is not possible to recommend a list of indicator papameters that are capable of identifying every possible release. It is recommended to begin by analyzing for a broad range of parameters to establish background ground-water quality, and then use the results to select the sampling parameters to be monitored subsequently at a site. Table 2 lists potential parameters for a basic ground-water monitoring program, by different categories. Modify these parameters, as appropriate, to address site-specific circumstances. Your knowledge of the actual waste streams or existing analytical data is a preliminary guide for what should be monitored, and leachate sampling data is also useful to select or adjust sampling parameters. Where there is uncertainty concerning the chemistry of the waste, you should perform metal and organic scans at a minimum. You should consult with the appropriate state agency to ensure that appropriate sampling parameters are selected.

What are the minimum components of a basic monitoring program?

Table 3 summarizes the recommended minimum components of a basic ground-water monitoring program described above. Potential modifications to the basic monitoring program that might be appropriate based on site-specific waste management unit conditions are discussed later in this chapter.

H. Potential Modifications to a Basic Ground-Water Monitoring Program

It might be appropriate to modify certain elements of the basic ground-water monitoring program described above to accommodate site-specific circumstances. When using the IWEM software to evaluate the need for a liner system, if the recommendation is to use a composite liner, then the basic ground-water monitoring program should probably be enhanced. If the recommendation using the software is that no liner is appropriate, then it might be possible to scale back some aspects of the basic ground-water monitoring program.

Components that might be subject to modification include the duration and frequency of monitoring, sampling parameters, and the use of vadose zone monitoring. Possible modifications of these elements are discussed further below. You should consult with the appropriate state officials on their requirements for ground-water monitoring programs. In some states, a unit might be eligible for a no-migration exemption from the state's ground-water monitoring requirements.

1. Duration and Frequency of Monitoring

The duration of monitoring (active life plus post-closure care) is not likely to be modified in either a reduced or an enhanced ground-water monitoring program. Adjustments to the frequency of monitoring, however, might be appropriate, based primarily on the mobility of contaminants and ground- water velocity. For example, if the sampling parameters are slow moving metals, annual rather than semi-annual monitoring might be appropriate. Conversely, quarterly monitoring might be considered at a unit with a rapid ground-water flow rate or a

Table 2
Potential Parameters for Basic Ground-Water Monitoring
(Potential Parameters Should be Selected Based on Site-Specific Circumstances)

Category	Specific Parameters
Field-Measured Parameters	Temperature pH Specific electrical conductance Dissolved oxygen Eh oxidation-reduction potential Turbidity
Leachate Indicators	Total organic carbon (TOC-filtered) pH Specific conductance Manganese (Mn) Iron (Fe) Ammonium (NH_4) Chloride (Cl) Sodium (Na) Biochemical oxygen demand (BOD) Chemical oxygen demand (COD) Volatile organic compounds (VOCs) Total Halogenated Compounds (TOX) Total Petroleum Hydrocarbons (TPH) Total dissolved solids (TDS)
Additional Major Water Quality Parameters	Bicarbonate (HCO_3) Boron (Bo) Carbonate (CO_3) Calcium (Ca) Fluoride (Fl) Magnesium (Mg) Nitrate (NO_3) Nitrogen (disolved N_2) Potassium (K) Sulfate (SO_4) Silicon (H_2SiO_4) Strontium (Sr) Total dissolved solids (TDS)
Minor and Trace Inorganics	Initial background sampling of inorganics for which drinking water standards exist (arsenic, barium, cadmium, chromium, lead, mercury, selenium, silver); ongoing monitoring of any constituents showing background near or above drinking water standards.
Waste-Specific Constituents	Selected based on knowledge of waste characteristics (initial metals and organic scans at a minimum).

Table 3 Recommended Components of a Basic Ground-Water Monitoring Program

Monitoring Component	Recommended Minimum
Number of Wells	Minimum 1 upgradient and 3 downgradient.[4]
Point of Monitoring	Waste management unit boundary or out to 150 meters down gradient of the waste management unit area.[5]
Duration of Monitoring	Active life plus post-closure care.
Frequency of Monitoring	Semi-annual during active life.[6]
Sampling Parameters	Metal and organic scans, use of indicators, leachate analysis, and/or knowledge of the waste. See the categories listed in Table 2.

mobile contaminant such as cyanide over a permeable sand and gravel aquifer.

2. *Sampling Parameters*

The basic recommended ground-water monitoring program already recommends the use of a parameter list that is tailored to the waste characteristics and site hydrogeology. Where the use of the IWEM software indicates no liner is appropriate, it might be possible to reduce the list of parameters routinely analyzed in downgradient wells to only a few indicator parameters. More complete analysis would only be initiated if a significant change in the concentration of an indicator parameter had occurred.

3. *Vadose-Zone Monitoring*

The vadose zone is the region between the ground surface and the saturated zone. Depending on climate, soils, and geology, it can range in thickness from several feet to hundreds of feet. Vadose-zone monitoring can detect migration of contaminants before they reach ground water, serving as an early warning system if a waste management unit is not functioning as designed. It can also reduce the time and cost of remediation, and the extent of subsequent ground-water monitoring efforts.

If site conditions permit, it might be desirable to include vadose-zone monitoring as part of the overall ground-water program. If vadose-zone monitoring is incorporated, the recommended number of ground-water monitoring wells would be determined by the basic ground-water monitoring program, and background quality would still need to be characterized with ground-water monitoring. The ground-water monitoring program becomes a backup, however, with full use only being initiated if contaminant migration is detected in the vadose zone. The sections

[4] The actual number of both upgradient and downgradient wells will vary from unit-to-unit and will depend on the actual site-specific conditions.

[5] Discussion of EPA's rationale for the point of monitoring being out to 150 meters from a unit's boundary can be found in 40 CFR Part 258 criteria.

[6] Ground-water flow rate might dictate that more or less frequent monitoring might be appropriate. More frequent monitoring might be appropriate at the start of a monitoring program to establish background. Less frequent and/or reduced in scope monitoring might also be appropriate during the post-closure care period.

below describe some of the commonly used methods for vadose zone monitoring, vadose zone characterization, and elements to consider in the design of a vadose zone monitoring system.

Vadose-Zone Monitoring Methods

There are dozens of specific techniques for indirect measurement and direct sampling of the vadose zone. The more commonly used methods with potential value for waste management units are described briefly below.

Soil-Water and Tension Monitoring

Measuring changes over time in soil-water content or soil-water tension is a relatively simple and inexpensive method for leak detection. Periodic measurements of soil water content or soil moisture tension beneath a lined waste management unit, for example, should show only small changes. Significant increases in water content or decreases in moisture tension would indicate a leak.

> *What method should be used to measure soil moisture?*

Soil-moisture characteristics can be measured in two main ways: 1) water content, usually expressed as weight percentage, and 2) soil-moisture tension, or suction, which measures how strongly water is held by soil particles due to capillary effects. As soil-water content increases, soil-moisture tension decreases. Measurements will not indicate, however, whether contaminants are present.

Figure 2 shows three major methods that are available for insitu monitoring of soil-moisture changes. Porous-cup tensiometers (Figure 2a) measure soil-moisture tension, with the pressure measurements indicated by using either a mercury manometer, a vacuum gauge, or pressure transducers. Soil-moisture resistivity sensors (Figure 2b) measure either

water content or soil-moisture tension, depending on how they are calibrated. Time-domain reflectometry probes (Figure 2c) measure water content using induced electromagnetic currents. For vadose-zone monitoring applications, the devices are usually placed during construction of a waste management unit and electrical cables run to one or more central locations for periodic measurement. The other commonly used method for monitoring soil-water content is to use neutron or dielectric probes. These require placement of access tubes, through which probes are lowered or pulled, and allow continuous measurement of changes in water content along the length of the tubes.

Soil-Pore Liquid Sampling

Sampling and analysis of soil-pore liquids can determine the type and concentration of contaminants that might be moving through the vadose zone. Soil-pore liquids can be collected by applying either a vacuum that exceeds the soil moisture tension, commonly done using vacuum or pressure-vacuum lysimeters, or by burying collectors that intercept drain water. Figures 3a and 3b illustrate different methods for collecting soil-pore liquids.

Soil-Gas Sampling

Soil-gas sampling is a relatively easy and inexpensive way to detect the presence or movement of volatile contaminants and gases associated with degradation of waste within a

Figure 2. Major Methods for In Situ Monitoring of Soil Moisture or Matrix Potential

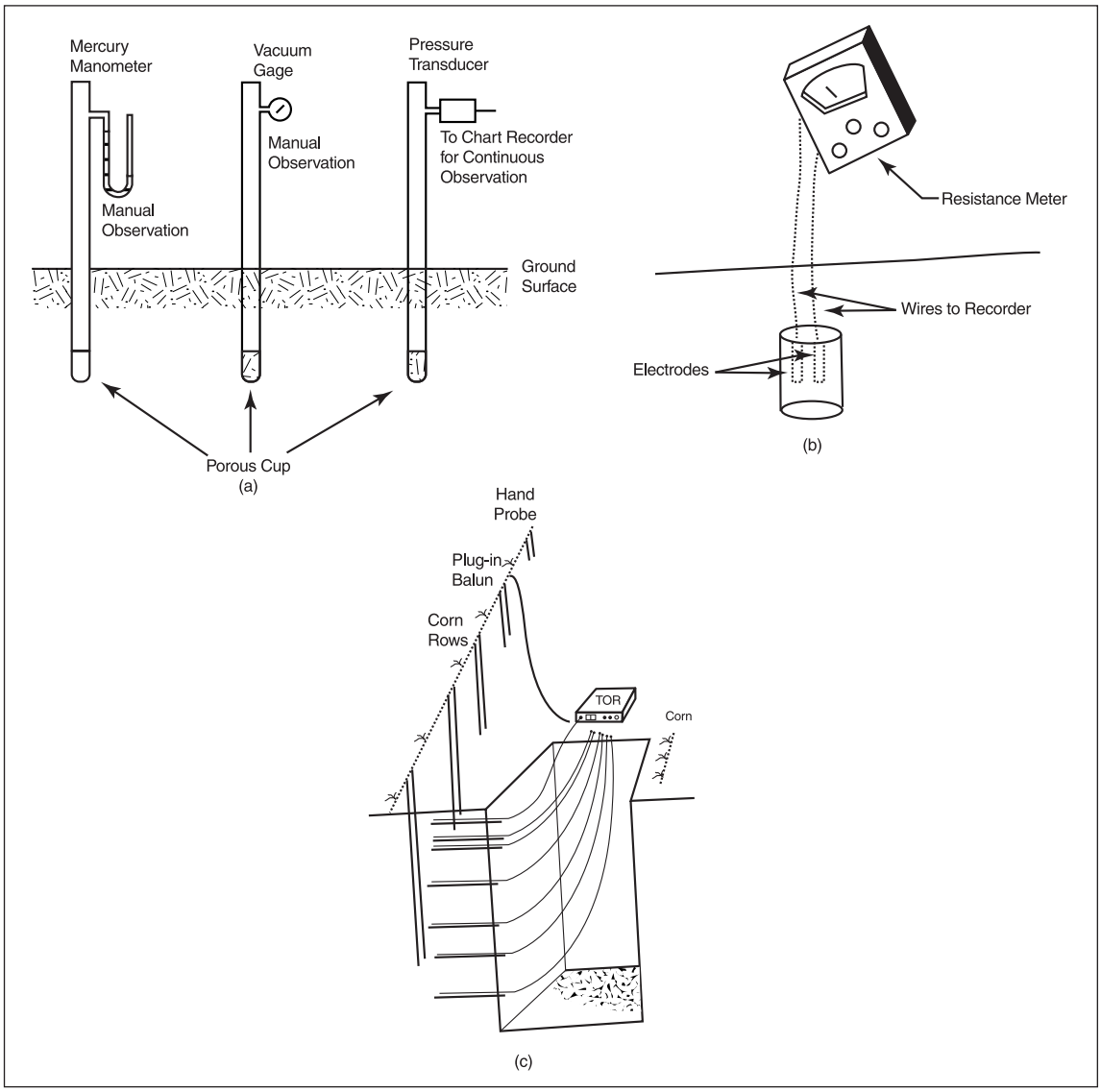

(a) Three Types of Porous Cup Tensiometers, (b) Resistance Sensors, and (c) Time Domain Reflectometry Probes
Sources: (a) Morrison, 1983. (b) U.S. EPA, 1993. (c) Topp and Davis, 1985, by permission.

waste management unit, such as carbon dioxide and methane. Of particular concern are gases associated with the breakdown of organic materials and toxic organic compounds. Permanent soil-gas monitoring installations consist of a probe point placed above the water table, a vacuum pump which draws soil-gas to the surface, and a syringe used to extract the gas sample, as shown in Figure 4a. Installing soil-gas probes at multiple levels, as shown in Figure 4b, allows detection of downward or upward migration of soil gases. It is important to note, however, that the performance of soil-gas sampling can

Figure 3. Example Methods for Collecting Soil-Pore Samples

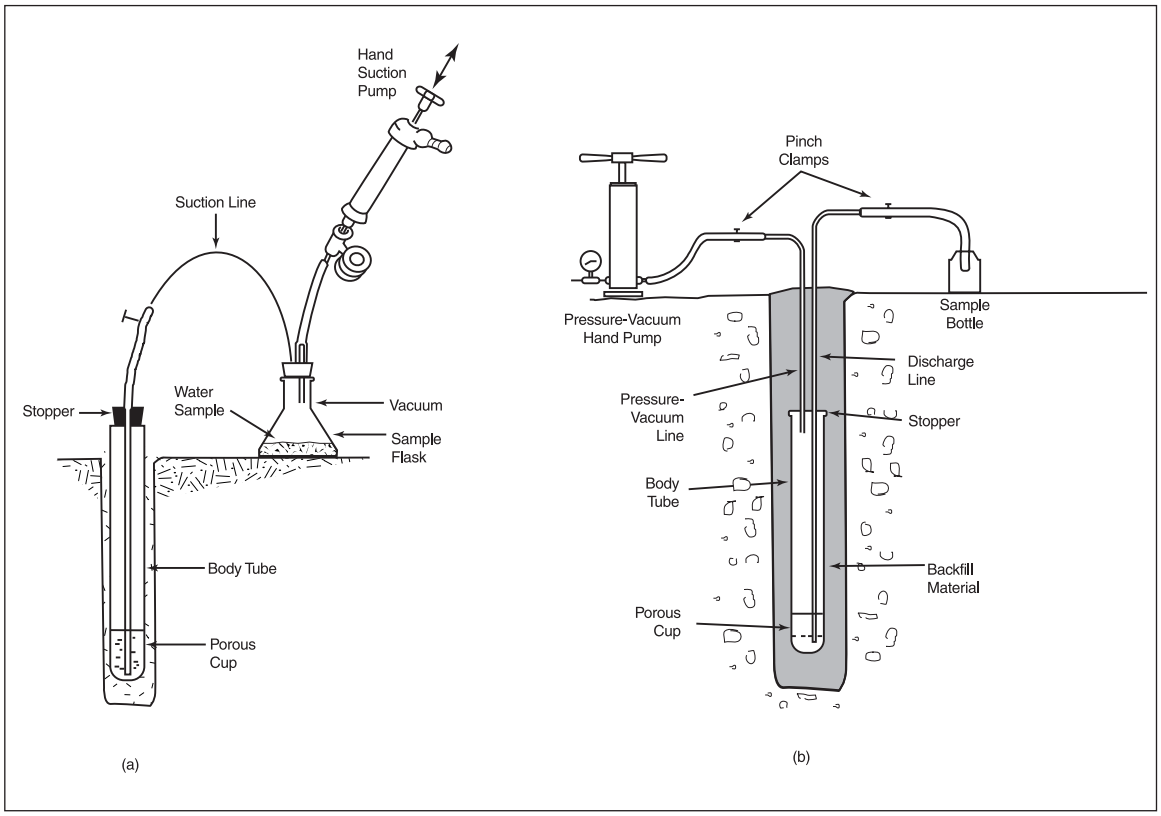

(a) Vacuum Lysimeter, (b) Pressure-Vacuum Lysimeter
Source: ASTM, 1994. Copyright ASTM. Reprinted with permission.

be limited by some types of soil, such as tight clays or tight, saturated clays.

Vadose Zone Characterization

Just as the design of ground-water monitoring systems requires an understanding of the ground-water flow system, the design of vadose zone monitoring systems requires an understanding of the vadose zone flow system. For example, in ground water systems, hydraulic conductivity does not change over time at a particular-location, whereas in the vadose zone, hydraulic conductivity changes with soil-water content and soil-moisture tension. To estimate the speed with which water will move through the vadose zone, the relationship between soil-water content, soil-moisture tension, and hydraulic conductivity should be measured or estimated. Unsaturated zone numerical modeling programs, such as HYDRUS 2-D or Seep (2-D) are designed to characterize the vadose zone.

Vadose-Zone Monitoring System Design

A vadose zone monitoring system combined with a ground-water monitoring system can reduce the cost of corrective measures in the event of a release. Remedial action is usually easier and less expensive if employed before contaminants reach the ground-water flow system.

The design and installation of a vadose-zone monitoring system are easiest with new waste

Figure 4. Soil Gas Sampling Systems

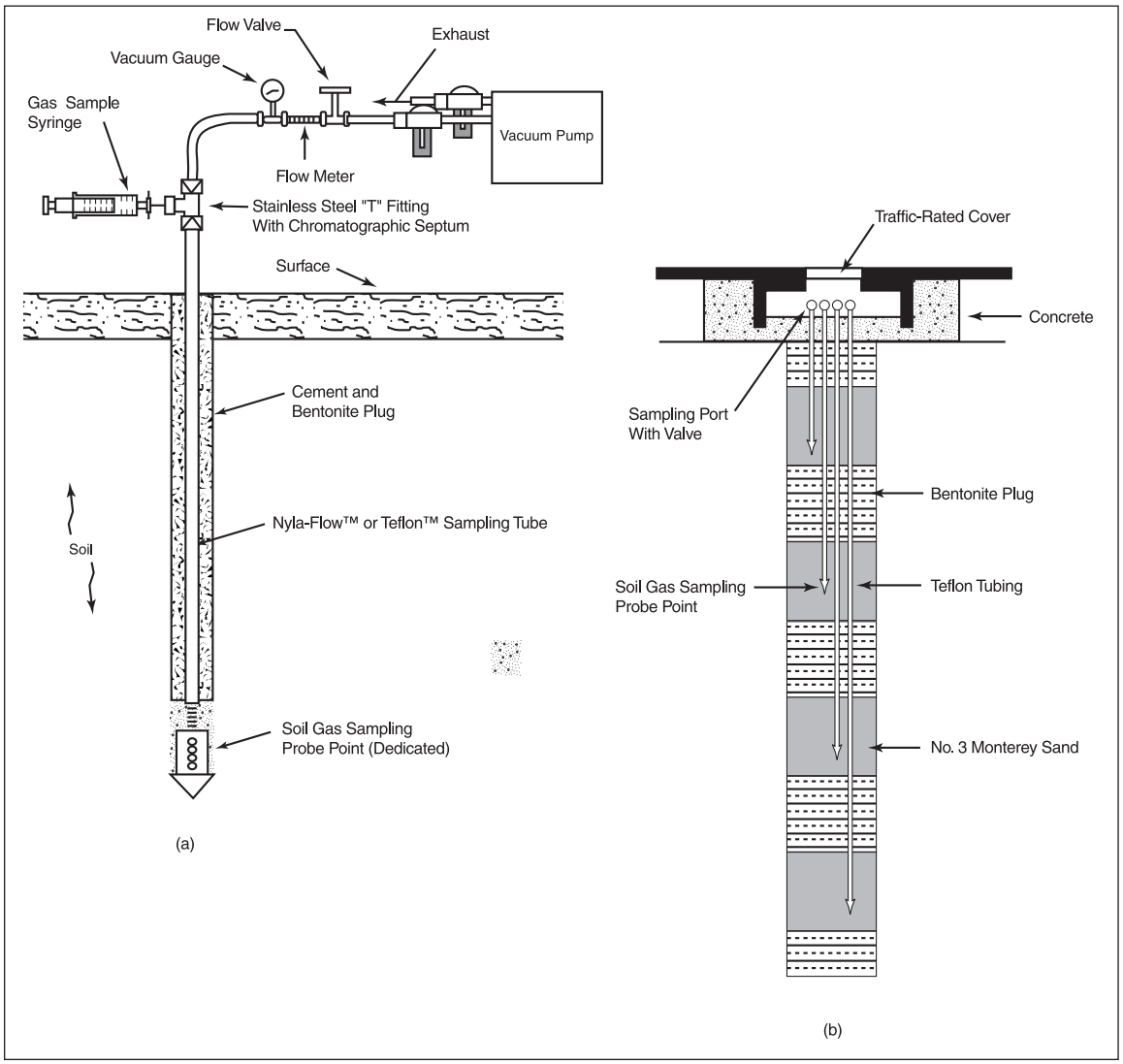

(a) Gas Sampling Probe and Sample Collection Systems, (b) Typical Installation of Nested Soil Gas Probes
Source: Reprinted with permission from Wilson, et al., *Handbook of Vadose Zone Characterization and Monitoring*, 1995. Copyright CRC Press, Boca Raton, Florida.

management facilities, where soil-water monitoring and sampling devices can be placed below the site. Relatively recent improvements in horizontal drilling technology, however, now allow installation of access tubes for soil-moisture monitoring beneath existing facilities. Important factors in choosing the location and depth of monitoring points in a leak-detection network include: 1) consideration of the potential area of downward leakage, and 2) determination of the effective detection area of the monitoring device.

Cullen et al. (1995) suggest an approach to vadose zone monitoring that includes the following:

- Identification and prioritization of critical areas most vulnerable to contaminant migration.
- Selection of indirect monitoring methods that provide reasonably comprehensive coverage and cost-effective, early warning of contaminant migration.
- Selection of direct monitoring methods that provide diagnostic confirmation of the presence and migration of contaminants.
- Identification of background monitoring points that will provide hydrogeologic monitoring data representative of preexisting site conditions.
- Identification of a cost-efficient, temporal monitoring plan that will provide early warning of contaminant migration in the vadose zone.

This approach is very similar to what is described for the basic ground-water monitoring program.

II. Surface-Water Monitoring

Controlling constituent discharges to surface water from industrial waste management units is another component of responsible waste management. Monitoring can be conducted for many purposes, such as:

- Characterizing surface-water conditions and identifying changes or trends in water quality over time.
- Identifying existing or emerging water quality problems.
- Identifying the types and amounts of constituents present in the water body.
- Designing a pollution prevention program or establishing best management practices (BMPs).
- Determining whether surface-water regulations and permit conditions are being satisfied.
- Responding to emergencies, such as accidental discharges or spills.

Some types of monitoring activities meet several of these purposes simultaneously, while others are specifically designed for one purpose, such as to determine compliance with permit conditions.

If your facility is subject to a federal, state, or local permit that requires monitoring and sampling, you must collect and analyze samples according to the permit requirements. Otherwise, you should consider implementing a sampling program to monitor the quality of runoff, the performance of BMPs, and any impacts on surface waters. For further information on BMPs relating to surface-water quality, refer to Chapter 6–Protecting Surface Water. Implementation of BMPs, along with regular maintenance inspections and upkeep, will greatly reduce the potential for surface-water contamination.

When establishing any type of sampling and monitoring program, there are certain common sense guidelines to follow. Inadequate frequency of data collection and incomplete monitoring might be useless while high-frequency monitoring and sampling for numerous constituents can be costly and could create a backlog of unusable data. The following discussion summarizes what you should consider when establishing sampling programs to effectively perform surface water monitoring.

A. Monitoring Storm-Water Discharges

As discussed in Chapter 6–Protecting Surface Water, NPDES permits establish limits on what constituents (and at what amounts or concentrations) facilities may discharge to receiving surface waters. Some waste management units, such as surface impoundments, might have an NPDES permit to discharge wastewaters directly to surface waters. Other units might need an NPDES permit for storm-water discharges. An NPDES permit will also contain limits on what can be discharged, monitoring and reporting requirements, and other provisions to ensure that the discharge does not impair surface-water quality or human health. Due to the variable nature of storm-water flows during a rainfall event and the different analytical considerations for certain constituents, the sampling requirements for different waste management unit types and sampling locations will vary as well. The guidelines and general sampling procedures outlined below should be considered when developing a storm-water sampling program to comply with permit requirements or to monitor the quality of runoff and determine the effectiveness of BMPs.

Sampling a representative storm. Using climatic data, you can determine the average rainfall depth and duration of rainfall events at the waste management unit site. You should sample during a representative storm event. The representative storm should be preceded by at least 72 hours of dry weather and, when possible, should be between 50 and 150 percent of the average depth and duration. The time to collect individual grab samples is during the first flush (i.e., the first 30 minutes of the event), and composite samples should then be collected over the first 3 hours, or the entire event if less than 3 hours. These guidelines help ensure that constituents in the sampled runoff will not be so concentrated or so dilute as to be unrepresentative of the overall runoff.

Determining the sample type. A grab sample is a discrete, individual sample taken within a short period of time, usually less than 15 minutes. Analysis of a grab sample characterizes the quality of a storm water-discharge at the time the sample was taken. These types of samples can be used to characterize the maximum concentration of a constituent in the discharge.

A composite sample is a mixed or combined sample that is formed by combining a series of individual and discrete samples of specific volumes at specified intervals. These intervals can be either time-weighted or flow-weighted. Time-weighted composite samples are collected and combined in proportion to time, while flow-weighted composite samples are combined in proportion to flow. Composite samples characterize the quality of a storm-water discharge over a specific period of time, such as the duration of a storm event.

Determining the sample techniques. Grab and composite samples can be collected by either manual or automatic sampling techniques. Manual samples are simply collected by hand, while automatic samples are collected by powered devices according to preprogrammed criteria. Both techniques have advantages and disadvantages that need to be weighed when choosing a sampling technique for a specific site. The advantages of manual sampling include its appropriateness for all constituents and its lower cost compared to automatic sampling. Manual sampling, however, can be labor intensive, can expose personnel to potentially hazardous conditions, and is subject to human error.

The advantages of automatic sampling are the convenience it offers, its minimum labor requirements, its reduction of personnel

exposure to hazardous conditions, and its low risk of human error. Unfortunately, automatic sampling is not suitable for all constituent types. Volatile organic compounds (VOC), for example, can not be sampled automatically due to the agitation during sample collection. This agitation can cause the VOC constituents to completely volatilize from the sample. Other constituents such as fecal streptococcus, fecal coliform, and chlorine might also not be amenable to automatic sampling due to their short holding times. Since sample temperature and pH need to be measured immediately, the option for using automatic sampling for these parameters is limited as well. Automatic sampling can also be expensive, and does require a certain amount of training. Table 4 presents a comparison of manual and automatic sampling techniques.

Sampling at the outfall point. Stormwater samples should be taken at a stormwater point source. A "point source" is defined as any discernible, confined, and discrete conveyance. The ideal sampling location is often the lowest point in a drainage area where a conveyance discharges, such as the discharge at the end of a pipe or ditch. The sample point should be easily accessible on foot and in a location that will not cause hazardous sampling conditions. You should not sample during dangerous wind, lightning, flooding, or other unsafe conditions. If these conditions are unavoidable during an event, then the sampling should be delayed until a less hazardous event occurs. Preferably, the sampling location will be located onsite, but if it is not, obtain permission from the owner of the property where the discharge is located. Inaccessible discharge points, numerous small point discharges, run-on from other properties, and infinite other scenarios can cause logistical problems with sampling locations. If the discharge is inaccessible or not likely to be representative of the runoff, samples might need to be taken at a point further upstream of the discharge pipe or at several locations to best characterize site runoff.

Coordinating with the laboratory. It is important to collect adequate sample volumes to complete all necessary analyses. When testing for certain constituents, samples might need to be cooled or otherwise preserved until analyzed to yield meaningful results. Section 3.5 of EPA's *NPDES Storm Water Sampling Guidance Document* (U.S. EPA, 1992) contains information on proper sample handling and preservation procedures. Submitting the proper information to the laboratory is important in ensuring proper sample handling by the laboratory. Proper sample documentation guidelines are outlined in Section 3.7 of the *NPDES Storm Water Sampling Guidance Document*. Coordination with the laboratory that will be performing the analysis will help ensure that these issues are adequately addressed.

You are required to follow all sampling and monitoring requirements in an NPDES permit. If there are no sampling requirements, analyze runoff for basic constituents, such as oil and grease, pH, biochemical oxygen demand (BOD), chemical oxygen demand (COD), total suspended solids (TSS), phosphorus, and nitrogen, as well as any other constituents known or suspected to be present in the waste, such as heavy metals or other toxic constituents.

Additional sampling guidance can be obtained from EPA's *NPDES Storm Water Sampling Guidance Document* (U.S. EPA, 1992) and *Interim Final RCRA Facility Investigation (RFI) Guidance: Volume III* (U.S. EPA, 1989). In addition, state and local environmental agencies also have guidance on appropriate sampling methods.

There is a national system that provides permitting information for facilities holding

Table 4
Comparison of Manual and Automatic Sampling Techniques

Sample Method	Advantages	Disadvantages
Manual Grabs	• Generally appropriate for all constituents • Minimum equipment required	• Labor-intensive • Environment possibly dangerous to field personnel • Might be difficult to get personnel and equipment to the storm water outfall within the first 30 minutes of the event • Possible human error
Manual Flow-Weighted Composites (multiple grabs)	• Generally appropriate for all constituents • Minimum equipment required	• Labor-intensive • Environment possibly dangerous to field personnel • Human error can have significant impact on sample representativeness • Requires that flow measurements be taken during sampling
Automatic Grabs	• Minimizes labor requirements • Low risk of human error • Reduced personnel exposure to unsafe conditions • Sampling can be triggered remotely or initiated according to present conditions	• Samples not collected for oil and grease, might not be representative • Automatic samplers generally cannot properly collect samples for VOC analysis • Costly if numerous sampling sites require the purchase of equipment • Can require equipment installation and maintenance; can malfunction • Can require operator training • Might not be appropriate for pH and temperature • Might not be appropriate for parameters with short holding times (e.g., fecal streptococcus, fecal coliform, chlorine) • Cross-contamination of aliquot if tubing/bottles not washed
Automatic Flow-Weighted Composites	• Minimizes labor requirements • Low risk of human error • Reduced personnel exposure to unsafe conditions • Can eliminate the need for manual compositing of aliquots • Sampling can be triggered remotely or initiated according to onsite conditions	• Generally not acceptable for VOC sampling • Costly if numerous sampling sites require the purchase of equipment • Can require equipment installation and maintenance; can malfunction • Can require operator training • Can require that flow measures be taken during sampling • Cross-contamination of aliquot if tubing/bottles not washed

Source: U.S. EPA, 1992.

NPDES permits. This system is called the Permits Compliance System (PCS) and it allows users to retrieve information regarding facilities holding NPDES permits, including permit limits and actual monitoring data. You can specify the desired information by using any combination of facility name, geographic location, standard industrial classification (SIC) code, and chemical names. The PCS database can be accessed at **<www.epa.gov/enviro/html/water.html#PCS>**.

B. Monitoring Discharges to POTWs

As discussed in the Chapter 6–Protecting Surface Water, industrial facilities discharging to a POTW might have to meet "pretreatment standards." If so,, they will be subject to certain requirements under a local pretreatment program. The National Pretreatment Program requires certain POTWs in defined circumstances to develop a local pretreatment program (see 40 CFR Section 403.8(a)). The actual requirement for a POTW to develop and implement a local program is a condition of the POTW's NPDES permit.

Sampling is the most common method for verifying compliance with pretreatment standards. Monitoring locations are usually designated by the local municipality administering the pretreatment program and will be such that compliance with permitted discharge limits can be determined. Monitoring locations should be appropriate for waste stream conditions, be representative of the discharge, have no bypass capabilities, and allow for unrestricted access at all times (see 40 CFR Section 403.12).

EPA's General Pretreatment Regulations require POTWs to monitor each significant industrial user (SIU) at least annually (see 40 CFR Section 403.8 (f)(2)(v)) and each SIU to self-monitor semi-annually, although permits issued by the local control authority might require more frequent monitoring (see 40 CFR Section 403.12 (g) and (h)). The local municipality will develop and implement standard operating procedures and policies that specify the sample collection and handling protocols in accordance with 40 CFR Part 136.

Sampling for constituents such as pH, cyanide, oil and grease, flashpoint, and VOCs will require manual collection of grab samples (see 40 CFR Section 403.12 (b)(5)). Similar to composite samples, grab samples must be representative (see 40 CFR Section 403.12 (g)(4)) of the discharge and must be collected from actively flowing waste streams. Fluctuations in flow or the nature of the discharge might require collection and hand-compositing of more than one grab sample to accurately access compliance. Flow-weighted composite samples are preferred over time-weighted composite samples, particularly where the monitored discharge is intermittent or variable. The local authorities can waive flow-weighted composite sampling if an industrial user demonstrates that flow-weighted sampling is not feasible. In these cases, time-weighted composite samples can be collected (see 40 CFR Section 403.12 (b)(5)(iii)). Refer to EPA's *Industrial User Inspection and Sampling Manual for POTWs* (U.S. EPA, 1994a) for additional information on sample collection and analysis procedures for the pretreatment program.

If you are subject to pretreatment requirements and must conduct sampling to demonstrate compliance, the requirements established for your site by the local control authority apply. These include following the proper sample collection and handling protocols and being able to prove that you did so (i.e., by keeping sampling records; noting location, date, and time of sample collection; maintaining chain of custody forms showing the link between field personnel and the lab-

oratory) (see 40 CFR Section 403.12(o)). Consult EPA's *Introduction to the National Pretreatment Program* document (U.S. EPA, 1999) for further information on monitoring requirements under the National Pretreatment Program.

C. Monitoring Surface Water Conditions

In order to determine if runoff from your waste management unit is impacting adjacent surface waters you might want to consider establishing a surface-water quality monitoring program. Chemical, physical, and biological data can provide information about the effectiveness of BMPs. The data collected will help you to characterize any overall water quality at the selected monitoring sites, identify problem areas, and document any changes in water quality.

In designing your program, one of the most important things to consider is what types of parameters to monitor (chemical, physical, and/or biological) that will enable you to determine how your waste management unit might be impacting the aquatic ecosystem. Determining where you should set-up a monitoring station is also very important and will depend on relevant hydrologic, geologic, and meteorologic factors. For assistance and more information on establishing water quality sampling stations and a sampling program you should consult with state and local water quality planning agencies. Additional guidance on establishing sampling and monitoring programs can be obtained from EPA's *Volunteer Stream Monitoring Document* (U.S. EPA, 1997) and *Volunteer Lake Monitoring Document* (U.S. EPA, 1991). Monitoring can be conducted at regular sites on a continuous basis ("fixed station" monitoring); at selected sites on an as needed basis or to answer specific questions ("intensive surveys"); on a temporary or seasonal basis (e.g., during periods of intense rainfall); or on an emergency basis (i.e., an accidental spill or discharge).

Why is the monitoring taking place?

You should first determine the purpose of establishing a surface-water monitoring program. Reasons for monitoring surface water can include developing baseline characterization data prior to a waste management unit being constructed, documenting water quality changes over time, screening for potential water quality problems, determining the effectiveness of BMPs, or determining the impact of the waste management unit on surface waters.

How will the data be used?

The data collected will help you to identify constituents of concern, the impacts of pollution and pollution control activities (i.e., BMPs), and trends in water quality. Note that the data you collect might also be useful to regional or local water quality planning offices that might already be collecting similar data in other parts of the watershed.

What parameters or conditions will be monitored?

The basic parameters that are indicators of general water quality health, include dissolved oxygen (DO), pH, total suspended solids (TSS), nitrogen, hardness, temperature, and phosphorous. In addition, you might choose to monitor parameters that would indicate whether the designated use (e.g., fisheries, recreation) of the water body is being met (as discussed in Chapter 6–Protecting Surface Water). Further, based on the types of constituents associated with the waste management unit, you should also sample for contaminants that would indicate whether your surface-water protection measures are

functioning properly (e.g., heavy metals, organics, or other materials associated with the unit). In many cases, a few surrogate constituents can be selected instead of analyzing a complete spectrum of constituents. For example, lead, zinc, or cadmium are often selected to indicate pollution by toxic metals. Instead of analyzing for every possible pathogenic microorganism, total and fecal coliform bacteria analyses are commonly used to indicate bacterial and viral contamination. Chemical oxygen demand (COD) and total organic carbon (TOC) are used in high-frequency grab sampling programs as indicators of pollution by organics.

Where should the monitoring sites/stations be located?

In order to determine if the waste management unit is having an impact on surface water it is important to determine the quality of the water upstream from the unit as well as downstream. You should also consider the number of sites to establish how accessible, safe, and convenient potential sites are. In addition, it is important to determine if potential sites are near tributary inflows, dams, bridges, or other structures that might affect the sampling results. You should also determine if you will establish permanent sampling stations (i.e., structures or buildings) or if the stations will simply be designated points within the watershed.

What sampling methods should be used?

You must decide how the samples will be collected, what sampling equipment will be used (e.g., automatic samplers or by hand), what equipment preparation methods are necessary (e.g., container sterilization, meter calibration), and what protocols will be followed. Refer to Part II, Section A of this chapter for a discussion of determining sampling methods. EPA's SW-846 also provides guidance on selecting the appropriate sampling methods.

When will the monitoring occur?

You need to establish how frequently monitoring will take place, what time of year is best for sampling, and what time of day is best for sampling. Monitoring at the same time of day and at regular intervals helps ensure comparability of data over time. In general, monthly chemical sampling and twice yearly biological sampling are considered adequate to identify water quality changes over time. If you are conducting biological sampling, it should be conducted at the same time each year because of natural seasonal variations in the aquatic ecosystem. Note that the frequency of sampling should be increased during the rainy season as this is when contamination from waste management units is expected to increase due to stormwater runoff.

How can the quality of the data collected be ensured?

You should develop a quality assurance plan to ensure that quality assurance and quality control procedures are implemented at all times. In addition, the personnel conducting the sampling should be properly trained and consider how to manage the data after the data have been collected.

Hydrologic and water quality information is also collected and published regularly by EPA and the U.S. Geological Survey (USGS). Both agencies have computerized systems for storing and retrieving information on water quality that are available on the Internet. Water quantity and flow data in streams is also available from USGS which has offices in every state. USGS also operates two national stream water quality networks, the Hydrologic Benchmark Network (HBN) and

EPA's Water Quality Data Management Systems

EPA maintains two data management systems containing water quality information: the Legacy Data Center (LDC) and STORET. The LDC contains historical water quality data dating back to the early part of the 20th century and collected up to the end of 1998. STORET (short for STOrage and RETrieval) contains data collected beginning in 1999, along with older data that has been properly documented and migrated from the LDC.

Both systems contain biological, chemical, and physical data on surface and ground water collected by federal, state and local agencies, Indian Tribes, volunteer groups, academics, and others. All 50 states, territories, and jurisdictions of the U.S. are represented.

Each sampling result in these databases is accompanied by information on where the sample was taken (e.g., latitude, longitude, state, county, Hydrologic Unit Code), when the sample was gathered, the medium sampled (e.g., water, sediment, fish tissue), and the name of the organization that sponsored the monitoring. In addition, STORET contains information on why the data were gathered; the sampling and analytical methods used; and the quality control checks used when sampling, handling, and analyzing the data.

The LDC and STORET databases are Web-enabled. With a standard Web browser, you can browse both systems interactively or create files to be downloaded to your computer. For more information on the LDC and STORET data management systems and how the water quality data can be obtained visit EPA's STORET Web site at **<www.epa.gov/storet>**.

the National Stream Quality Accounting Network (NASQAN). These networks were established to provide national and regional descriptions of stream water quality conditions and trends, based on uniform monitoring of selected watersheds throughout the United States, and to improve our understanding of the effects of the natural environment and human activities on water quality. Stream water quality measurements are available for the approximate periods 1973 to 1995 for NASQAN and 1962 to 1995 for HBN. For more information on how to obtain this water quality information, visit the USGS Web site at **<water.usgs.gov/pubs/FS/fs-014-00/index.html>**.

III. Soil Monitoring

This section focuses primarily on establishing a soil monitoring program for land application purposes. Much of the following discussion concerning sampling methods, protocols, and quality assurance and quality control, however, also is applicable to soil monitoring for corrective action site assessments. Part I of Chapter 10–Taking Corrective Action outlines which parameters to consider when performing soil investigations for corrective action purposes. For more information on corrective action unit assessments, refer to the North Carolina Cooperative Extension Service's *Soil facts: Careful Soil Sampling - The Key to Reliable Soil Test Information* (AG-439-30), the University of Nebraska Cooperative Extension Institute of Agriculture and Natural Resources' *Guidelines for Soil Sampling* (G91-1000-A), and EPA's *RCRA Facility Investigation Guidance: Volume II: Soil, Ground Water and Subsurface Gas Releases* (U.S. EPA, 1989). As discussed in Part I of this chapter, soil monitoring can be used to detect the presence of waste constituents in the soil and track their

migration before they reach ground water. Characterizing the soil properties at a land application site can also help you determine the application rates that will maximize waste assimilation.

To obtain site-specific data on actual soil conditions, the soil should be sampled and characterized. The number and location of samples necessary for adequate soil characterization is primarily a function of the variability of the soils at a site. If the soil types occur in simple patterns, a composite sample of each major soil type can provide an accurate picture of the soil characteristics. The depth to which the soil profile is sampled, and the extent to which each horizon is vertically subdivided, will depend on the parameters to be analyzed, the vertical variations in soil character, and the objectives of the soil sampling program. You should rely on a qualified soil scientist to perform this characterization. Poorly conducted soil sampling can result in an inaccurate soil characterization which could lead to improper application of waste and failure of the unit to properly assimilate the applied waste.

A. Determining the Quality of Soil

Soil quality is an assessment of how well soil performs all of its functions, not just how well it assimilates waste. Measuring crop yield, nutrient levels, water quality, or any other single outcome alone will not give you a complete assessment of a soil's quality. The minerals and microbes in soil are responsible for filtering, buffering, degrading, immobilizing, and detoxifying organic and inorganic materials, including those applied to the land and deposited by the atmosphere. Determining the quality of a soil is an assessment of how it performs all of these functions in addition to waste assimilation. For assessing soil quality in relation to land application units, it will be

Examples of Indicators of Soil Quality

Indicator	Relationship to Soil Health
Soil organic matter (SOM).	Soil fertility, structure, stability, nutrient retention, soil erosion.
PHYSICAL: soil structure, depth of soil, infiltration and bulk density, water holding capacity.	Retention and transport of water and nutrients, habitat for microbes, estimate of crop productivity potential, compaction, water movement, porosity, workability.
CHEMICAL: pH, electrical conductivity, extractable nitrogen-phosphorous-potassium.	Biological and chemical activity thresholds, plant and microbial activity thresholds, plant available nutrients and potential for nitrogen and phosphorous loss.
BIOLOGICAL: microbial biomass, carbon and nitrogen, potentially mineralizable nitrogen, soil supplying potential, microbial activity measure.	Microbial catalytic potential and repository for carbon and nitrogen, soil productivity and respiration.

important for the soil to be able to filter the waste constituents and cycle nutrients such as carbon, nitrogen, and phosphorus.

Measuring soil quality requires the use of physical, chemical, and biological indicators, which can be assessed by qualitative or quantitative techniques. After measurements are collected, they can be evaluated by looking for patterns and comparing results to measurements taken at a different time or field. For more information, consult the *Guidelines for Soil Quality Assessment* prepared by the Soil Quality Institute of the Natural Resources Conservation Service (formerly the U.S. Soil Conservation Service).

B. Sampling Location and Frequency

Prior to sampling, divide the land application unit into uniform areas, then collect representative samples from each area. These divisions should be based upon soil type, slope, degree of erosion, cropping history, known crop growth differences, and any other factors that might influence nutrient levels in the soil. One recommended approach is to divide the unit into areas no larger than 20 acres and to collect at least one sample from each of these areas.

Each sample for a designated area consists of a predetermined number of soil cores. A soil core is an individual boring at one spot in the field. The recommended number of cores per sample are 15-20 cores for a surface soil sample and 6-8 cores for a subsurface sample. If using a soil probe, a single core can be separated into its horizontal layers to provide samples for each layer being analyzed. For example, a single core could be divided into four predefined layers such as surface soil, subsurface soil, and two deep subsurface soil. For a designated area, all the individual cores are combined according to soil level and mixed to provide a composite sample for the area. From the mixed cores a composite subsample should be taken and analyzed. Each grab sample can be analyzed individually, rather than combined, as part of a composite sample (discussed below), but composite samples generally provide reliable data for soil characterization.

Soil core grab samples can be collected at random or in a grid pattern. Random collection generally requires the least amount of time, but cores must be collected from the entire area to ensure reliable site characterization. When performed properly, random sampling will provide an accurate assessment of average soil nutrient and constituent levels. While the preparation required for collecting core samples in a grid pattern can be more costly and time consuming, it does ensure that the entire area is sampled. An advantage of grid sampling is the ability to generate detailed nutrient level maps for a land application unit. This requires analysis of each individual grab sample from an area, rather than compositing samples. Analyzing each individual grab sample is time consuming and expensive, but software and computerized applicators are becoming available that can use these data to tailor nutrient application to soil needs.

You should determine baseline conditions by sampling the soil before waste application begins. Subsequent sampling will depend on land use and any state or local soil monitoring requirements. After waste is applied to the land application unit, you should collect and analyze samples at regular intervals, or after a certain number of applications. You should sample annually, at a minimum, or more frequently, if appropriate.

The frequency of sampling, the micronutrients, the macronutrients, and the constituents to be analyzed will depend on site-specific soil, water, plant, and waste

characteristics. Local agricultural extension services, which have experience with designing soil-sampling programs, can assist in this area. Soil monitoring, especially when coupled with ground-water monitoring, can detect contamination problems. Early detection allows changes to be made to the land application process to remedy the problems and to conduct corrective action if necessary. Finally, soil testing after the active life of the unit has ended is recommended to determine if any residues remain in the soil.

C. Sampling Equipment

There are a number of soil sampling devices available. A soil probe or tube is the most desirable, as it provides a continuous core with minimal disturbance of the soil. Sample cores from a soil probe can be divided by depth and provide surface, subsurface, and deep subsurface samples from a single boring. When the soil is too wet, too dry, or frozen, however, soil probes are not very effective. The presence of gravel in the soil will also prevent the use of a soil probe.

When sampling excessively wet, dry, or frozen soils, or soils with gravel, a soil auger can be used in place of a soil probe. Because of their tendency to mix soils from different depths during sample collection, a soil auger should only be used when the use of a soil probe is not possible. A spade can also be used for surface samples, but it is not effective for subsurface sampling. Post-hole diggers can be used for collecting deeper subsurface samples, but they present the same mixing problem as soil augers. EPA's *Description and Sampling of Contaminated Soils: A Field Pocket Guide* (U.S. EPA, 1991) contains a description of various hand-held and power-driven tube samplers. The guide also outlines the recommended applications and limitations for each sampling device.

D. Sample Collection

Initial soil characterization samples are typically taken from each distinct soil horizon down to a depth of 4-5 feet (120-150 cm). For example, a single core sample might provide the following four horizon samples: surface (0-6 inches), subsurface (6-18 inches), and two deep subsurface (18-30 inches and 30-42 inches). For subsequent evaluations, it is important to sample more than just the surface layer to determine if the land application rate is appropriate and that the quality of soil is not being detrimentally affected. Sampling subsurface layers will indicate whether waste constituents are being removed and assimilated as expected and are not leaching into subsurface layers or the groundwater. As a minimum practice, sample at least the upper soil layer (0-6 inches) and at least one deeper soil layer (e.g., 18-30 inches). You should consult the local agricultural extension service, the county agricultural agent, or other soil professionals for recommended soil sampling depths for the specific area in which your land application unit is located.

Once the samples have been obtained, they must be prepared for chemical analysis. This typically is done by having the sample air dried, ground, and mixed, and then passed through a 2 millimeter sieve as soon as possible after collection. If the samples are to be analyzed for nitrate, ammonia, or pathogens, then they should be refrigerated under moist field conditions and analyzed as soon as possible. For more information on handling and preparing soil samples, refer to the "General Protocol for Soil Sample Handling and Preparation" section in EPA's *Description and Sampling of Contaminated Soils: A Field Pocket Guide* (U.S. EPA,1991). ASTM method D-4220 *Practices for Preserving and Transporting Soil Samples* also addresses proper soil sample handling protocols.

The exact procedure for drying is not critical as long as contamination is minimized and excessive temperatures are avoided. The recommended drying procedure for routine soil analysis is to dry the samples overnight, using forced air at ambient temperatures. Supplemental heating can be used, but it is recommended that soil samples to be used for routine analyses not be dried at greater than 36°C. Microwave drying can alter the analytical results and should be avoided.

Because soil is defined as having a particle size of less than 2 millimeters, this sieve size (# 10 mesh) is recommended for routine soil testing. Commercial soil grinders and crushers, such as mortar and pestles, hammermills, or roller-crushers, are typically long and motorized. The amount of coarse fragments common in some samples limits the use of some of these. In general, it is desirable to get most of the sample to less than 2 mm with the least amount of grinding. If the sample is to be analyzed for micronutrients, all contact with metal surfaces should be avoided during crushing and sieving unless it has been clearly demonstrated that the metal is not a source of contamination. Cross-contamination between samples can be avoided by minimizing soil-particle carry over on the crushing and sieving apparatus. For macronutrient analysis, removal of particles by brushing or jarring should be adequate. If micronutrient or trace element analysis is to be performed, a more thorough cleaning of the apparatus by brushing or wiping between samples might be required.

The bulk soil sample should be thoroughly homogenized by mixing with a spatula, stirring rod, or other implement. As much of the sample as possible should be loosened and mixed together. No segregation of the sample by aggregate size should be apparent after mixing. You should dip into the center of the mixed sample to obtain a subsample for analysis.

Prior to sampling, all containers and equipment that are to be used for soil collection (i.e., those that will come in contact with the soil being sampled) should be rinsed in warm tap water to remove any residual soil particles from previous sampling runs. They should then be rinsed with an aluminum chloride solution. Avoid using anhydrous aluminum chloride due to its violent reaction with water. A four percent hydrogen chloride solution can also be used if the soil is not to be analyzed for chlorine. The containers and equipment should be rinsed twice in distilled or deionized water and allowed to dry prior to use.

You should obtain professional assistance from qualified soil scientists and laboratories to properly interpret the soil-sample results. For more information about how to obtain representative soil samples and submit them for analysis, you can consult various federal manuals, such as EPA's *Laboratory Methods for Soil and Foliar Analysis in Long-Term Environmental Monitoring Programs* (U.S. EPA, 1995b), or state guides, such as Nebraska's *Guidelines for Soil Sampling* (G91-1000-A). The following ASTM methods might also prove useful when conducting soil sampling: D-1452 *Practice for Soil Investigation and Sampling by Auger Borings*; D-1586 *Test Method for Penetration Test and Split-Barrel Sampling of Soils*; D-1587 *Practice for Thin-Walled Tube Sampling of Soils*; and D-3550 *Practice for Ring-Lined Barrel Sampling of Soils.*

IV. Air Monitoring

The development of appropriate air-monitoring data can be technically complex and resource intensive. The Industrial Waste Air (IWAIR) Model on the CD ROM version of this Guide provides a simple tool that relies on waste characterization information, rather than actual air monitoring data, to evaluate

risks from VOC emissions at a unit. The air-modeling tool uses an emissions model to estimate emissions from a waste management unit based on the waste characterization. You should review Chapter 5–Protecting Air Quality, and the supporting background document developed for the IWAIR model to understand the limitations of the model and determine whether it is applicable to a specific unit. If the model is not appropriate for a specific site or if it indicates that there is a problem with VOC emissions, use an alternative (emissions) model that is more appropriate for the site or consider air monitoring to gather more site-specific data.

A. Types of Air Emissions Monitoring

There are generally four different types of air emissions monitoring: source, ambient, fugitive, and indoor. Source, ambient, and fugitive monitoring can provide data for use in emission and dispersion modeling. In addition, the monitoring of meteorological conditions at sites is generally conducted whenever source emissions or ambient monitoring is performed, as discussed below. As the vast majority of industrial waste management units are located outdoors, indoor air quality and monitoring issues typically will not apply. Consequently, this guide does not address this issue. For more information on indoor air quality and monitoring visit the Occupational Safety and Health Administration's (OSHA) Web site at **<www.osha-slc.gov/SLTC/indoorairquality/index.html>**.

1. Emissions Monitoring

Stationary-source emissions monitoring involves the direct sampling of an air stream in a duct, stack, or pipe that is the end source of an emission release point. A stationary source is an immobile unit from which air pollutants are released. Examples include incinerators, boilers, industrial furnaces, landfills, waste piles, surface impoundments, and other waste management units. The purpose of source sampling is to obtain as accurate a sample as possible of the material entering the atmosphere. The major reasons for which source testing is required are to demonstrate compliance with regulations or permit conditions, to collect engineering data (e.g., to evaluate the performance of air pollution control equipment), to support performance guarantees (e.g., checking to confirm that the air pollution control equipment is meeting the guaranteed degree of performance), and to provide data for air modeling.

2. Ambient Monitoring

The second type of air monitoring involves ambient air monitoring at selected locations around the waste management unit or site. The data are used to monitor dispersion of airborne contaminants to the surrounding areas. Ambient testing usually involves "fenceline" testing. Typically, the air is monitored at the four fenceline compass points. At least one additional measuring station is placed either in the predominant upwind (or downwind) location or in a direct line between your site and a neighboring facility or property. The resulting data should yield information concerning the concentration of ambient emissions leaving your property (minus the emissions from adjacent facilities).

In many areas of the country, several facilities share property boundaries delineated by a fenceline. Since each facility is regulated according to total emissions, it is critical that a neighboring facility's "drifting" emissions be qualified and quantified. Depending on the neighboring facility's production rate, the atmospheric conditions, and the seasonal climate, the neighboring facility's emissions could

impact the operation of your facility. For example, many facilities are required to continuously monitor downwind fenceline emission of hydrocarbons. If a neighboring facility's emissions of hydrocarbons or adjacent freeway hydrocarbon emissions drift across your fenceline and combine with your own hydrocarbon emissions, your total facility hydrocarbon emission limit could be violated.

3. Fugitive Monitoring

Fugitive testing is a hybrid of ambient and source testing and generally involves the monitoring of either particulate or gaseous emissions from sources open to the atmosphere. It can involve testing sources such as valves, flanges, pumps, and similar equipment and hardware for leaks, and it can include quantifying emissions from open drums, open vats, landfills, waste piles, and surface impoundments such as lagoons, pits, and settling ponds. It is typically conducted using one or more of the following techniques: use of a handheld organic analyzer; "bagging" suspect sources for subsequent analysis; capturing and scrubbing fugitive emissions using a floating flux chamber/summa canister; or measuring particulate matter greater than or less than 10 microns in diameter (PM10) following promulgated EPA test methods.

Selection of the test method depends on factors such as the type of emissions, source type, temperature, pressure, constituent concentration, etc. (test methods are discussed later in this chapter). For example, a plant operator who suspects that a valve is leaking might use a handheld organic analyzer to verify the presence of a leak. If the analyzer is not able to quantify the concentration of the leaking gas, then the bagging technique can be employed. To determine the amount and type of organic emissions escaping from a settling pond or wastewater treatment tank, a floating flux chamber/summa canister might be preferred. This is a box that isolates a portion of the pond to determine volumetric flow. The box acts as a floating stack in which emissions are captured into a canister for analysis. For material transfer operations or vehicular traffic from unpaved roads, it is obviously not practical to use a handheld analyzer or to "bag" the source (especially something as large as a waste pile). In such cases of particulate matter fugitive emissions, a high-volume ambient PM10 sampling system is used, or the emissions are ducted through a temporary stack for direct measurement using a sampling train (see Figure 6).

4. Meteorological Monitoring

Another form of air monitoring measures meteorological conditions at a site. Site-specific meteorological information can be collected for use in air emission and dispersion modeling. This type of monitoring involves measurement of wind speed, wind direction, temperature, etc., and can be performed when other offsite meteorological information might not adequately characterize the weather conditions at the site. Local wind systems are usually quite significant in terms of the transport and dispersion of air constituents. Therefore, local meteorological monitoring will most likely be important for mountainous or hilly terrain (where solar heating and radiational cooling influence how wind moves) or for a site near a large body of water (where the differential heating of land and water can result in thermals and subsidence over water). Also, the initial direction of transport of constituents from their source is determined by the wind direction at the source.

To make meteorological measurements, three components are typically needed: a detector or sensor, an encoder or digitizer, and a data logger. Most detectors are analog, providing a continuous output as a function

of varying meteorological conditions. The output signal must then be sampled to produce a discrete digital record, using some sort of encoder or analog-to-digital converter. The resulting discrete series of data must be recorded, often on magnetic tape, magnetic disks, or optical disks. "Instrument system" or "instrument package" is the name given to the set of all three components listed above.

Additional components might also be necessary including: an instrument platform, a means of calibration, and display devices. Platforms, such as a tower, can often hold many instrument systems. Calibration against known standards should be performed periodically during the measuring program, or should be accomplished continuously as a function of the sensor or instrument package. All data must be calibrated. Finally, the measured values should be displayed on printers, plotters, or video displays in order to confirm the proper operation of the instrument.

A large variety of sensors have been developed to measure various meteorologic parameters. Direct sensors are ones that are placed on an instrument platform to make in situ measurements of the air at the location of the sensor. Remote sensors measure waves that are generated by, or modified by, the atmosphere at locations distant from the sensor. These waves propagate from the generation or modification point back to the sensor. Disadvantages of direct sensors include modification of the flow by the sensor or its platform and the requirement to physically position the sensor where the measurement is to be made. Disadvantages of remote sensors include their size, cost, and complexity. Advantages of direct sensors include sensitivity, accuracy, and simplicity. Advantages of remote sensors include the fact that they can quickly scan a large area while remaining stationary on the ground.

Sensors Used To Measure Meteorologic Parameters

The following types of sensors can be used to monitor meteorological conditions at a site (note that this list is not meant to be exhaustive):

Temperature—thermometers.

Direct sensors:	*Remote sensors:*
wax thermostat	microwave sounders
thermistor	sodar
bimetallic strip thermistor	
thermocouple	
liquid (mercury or alcohol) in glass	
radiometers	

Humidity—hygrometers.

Direct sensors:	*Remote sensors:*
psychrometers	lidar
hair hygrometer	radar
chilled mirror (dew pointer)	
hygristor	

Wind—velocity (anemometers) and direction (vanes).

Direct senors:	*Remote sensors:*
cup	Doppler radar
propellar	
wind vane	
bivane	

Pressure—barometers and microbarographs.

Direct sensors:
aneroid elements
capacitive elements
mercury in glass

Remote sensors:
None that use wave propagation directly, but some that measure temperature and velocity fluctuations as mentioned above, and infer pressure perturbations as residual from governing equations.

Radiation—radiometers.
Radiometers can be designed to measure radiation in specific frequency bands coming from specific directions: radiometer, net radiometer, pyranometer, and net pyranometer.

B. Air Monitoring and Sampling Equipment

1. Ambient Air Monitoring

For ambient air monitoring, the principal requirement of a sampling system is to obtain a sample that is representative of the atmosphere at a particular place and time. The major components of most sampling systems are an inlet manifold, an air mover, a collection medium, and a flow measurement device. The inlet manifold transports material from the ambient atmosphere to the collection medium, or analytical device, preferably in an unaltered condition. The inlet opening can be designed for a specific purpose. All inlets for ambient sampling must be rainproof. Inlet manifolds are made out of glass, Teflon, stainless steel, or other inert materials and permit the remaining components of the system to be located at a distance from the sample manifold inlet. The air mover (i.e., pump) provides the force to create a vacuum or lower pressure at the end of the sampling system. The collection medium for a sampling system can be a liquid or solid sorbent for dissolving gases, a filter surface for collecting particles, or a chamber to contain an aliquot of air for analysis. The flow device measures the volume of air associated with the sampling system. Examples of flow devices include mass flow meters and rotameters.

Gaseous Constituents

Sampling systems for gaseous constituents can take several forms and might not necessarily have all four components as shown in Figure 5. The sampling manifold's only function is to transport the gas from the manifold inlet to the collection medium. The manifold must be made of nonreactive material and no condensation should be allowed to occur in the sampling manifold. The volume of the manifold and the sampling flow rate determine the time required for the gas to move from the inlet to the collection medium. This residence time can be minimized to decrease the loss of reactive species in the manifold by keeping the manifold as short as possible.

The collection medium for gases can be liquid or solid sorbents, and evacuated flask,

Figure 5. Schematic Diagram of Various Types of Sampling Systems

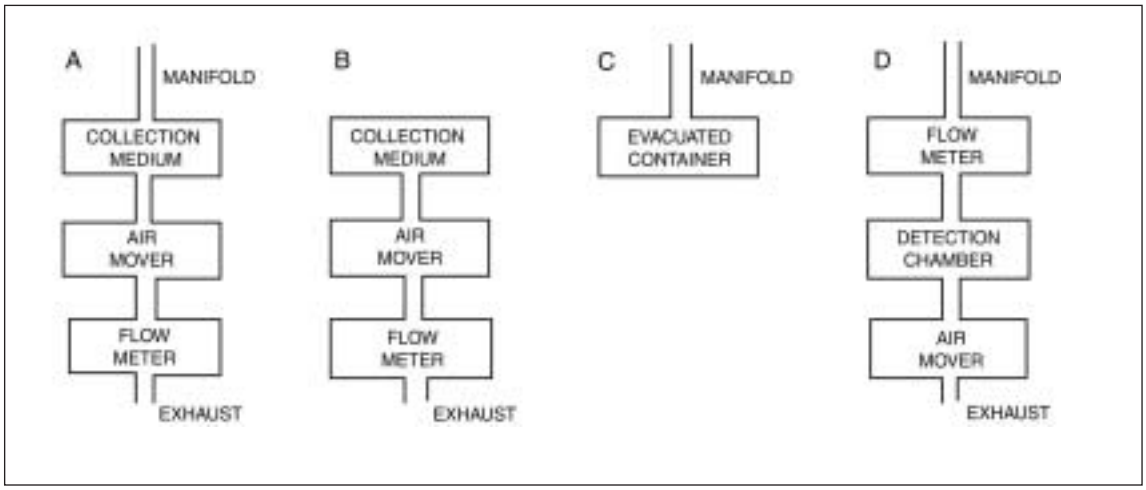

Source: *Fundamentals of Air Pollution.*

or a cryogenic trap. Each design is an attempt to optimize gas flow rate and collection efficiency. Higher flow rates permit shorter sampling times. Liquid collection systems take the form of bubblers which are designed to maximize the gas-liquid interface. However, excessive flow rates can result in lower collection efficiency.

Diagram A is typical of many extractive sampling techniques (e.g., SO_2 in liquid sorbents and polynuclear aromatic hydrocarbons on solid sorbents). Diagram B is used for "open-face" filter collection, in which the filter is directly exposed to the atmosphere being sampled. Diagram C is an evacuated container used to collect an aliquot of air or gas to be transported to the laboratory for chemical analysis, (e.g., polished stainless steel canisters are used to collect ambient hydrocarbons for air toxic analysis). Diagram D is the basis for many of the automated continuous analyzers, which combine the sampling and analytical processes in one piece of equipment (e.g., continuous ambient air monitors for SO_2, O_3, and NOx).

Particulate Constituents

Sampling for particulate constituents in the atmosphere involves a different set of parameters from those used for gases. Particles are inherently larger than the molecules of N_2 and O_2 in the surrounding air and behave differently with increasing diameter. When sampling for particulate matter in the atmosphere, three pieces of information are of particular interest: the concentration, the size, and the chemical composition of the particles. Particle size is important in determining adverse effects and atmospheric removal processes.

The primary approach is to separate the particles from a known volume of air and subject them to weight determination and chemical analysis. The principle methods for extracting particles from an airstream are filtration and impaction.[7] All sampling techniques must be concerned with the behavior of particles in a moving airstream. Care must be taken to move the particles through the manifold to the collection medium in an unaltered form. Potential problems arise if manifold systems are too long or too twisted. Gravitational settling in the manifold will remove a fraction of the very large particles. Larger particles are also subject to loss by impaction on walls at bends in a manifold. Particles can also be subject to electrostatic forces which will cause them to migrate to the walls of nonconducting manifolds. Other potential problems include condensation or agglomeration during transit time in the manifold. These constraints require particulate sampling manifolds to be as short as possible and to have as few bends as possible.

2. Source Emissions Monitoring

For source emissions monitoring, the sampling system is tailored to the unique properties of the emissions from a particular process. It is necessary to take into account the specific process, the nature of the control devices, the peculiarities of the source, and the use of the data obtained. In source monitoring, the sample is obtained from a stack that is discharging to the atmosphere using a "sampling train". A typical sample train is shown in Figure 6. The figure shows the minimum number of components, but in some systems the components can be combined. Extreme care must be exercised to assure that no leaks occur in the train and that the components of the train are identical for both calibration and sampling. Standard sampling trains are specified for some tests. Continuous emission monitors (CEMs) are also available to monitor opacity and certain gaseous emissions.

[7] Filtration consists of collecting particles on a filter surface by three processes: direct interception, inertial impaction, and diffusion. Filtration attempts to remove a very high percentage of the mass and number of particles by these processes. Any size classification is done by a preclassifier, such as an impactor, before the particle stream reaches the surface of the filter

Figure 6. Sampling Train

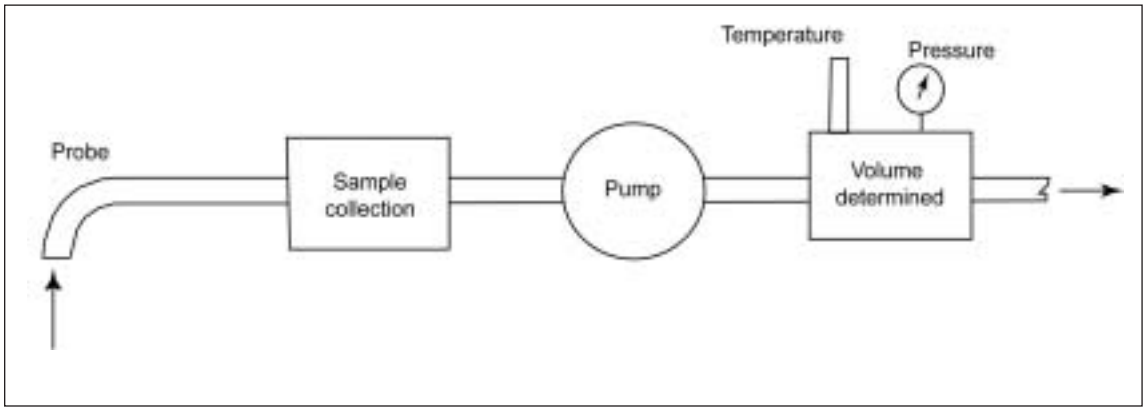

Source: *Fundamentals of Air Pollution.*

C. Test Method Selection

Correct method selection is both scientific and subjective. Knowing when to utilize the appropriate method for a given circumstance is very important, since incorrect or inaccurate measurement can lead to incorrect results. The test methods to be used for air emission monitoring are typically specified by applicable regulations; and the type of facility will often determine the regulations or standards which are applicable. In general, most EPA test methods applicable to a facility will be contained in the Code of Federal Regulations (40 CFR Parts 60, 61, 63, and 51). Other test methods might be specified by the EPA Office of Solid Waste or the National Institute for Occupational Safety and Health (primarily for indoor air monitoring). Additionally, some states and local air pollution control agencies have their own test methods that differ from EPA methods, the use of which might be required in lieu of EPA methods. The CFR specifies test methods for testing for numerous compounds and various parameters necessary for determining constituent concentrations and emission rates. New regulations, however, are being developed for many compounds that, as yet, have no promulgated test methods. Air emission testing specialists or consultants can often determine appropriate test methods for most of these compounds. Usually, the testing involves adapting an existing method to the constituent of interest. It is best to use an existing method whenever possible. If using an existing method is impractical, you can develop a test method particular to that constituent to monitor for it. You should seek the advice or assistance of a professional if this is the case and consult your state and local air quality offices.

D. Sampling Site Selection

Sampling activities are typically undertaken to determine the ambient air quality for compliance with air quality standards, to evaluate the effectiveness of air pollution control techniques being implemented at the site, to evaluate hazards associated with accidental spills, and to collect data for air emissions and dispersion modeling. The purpose or use of the results of the monitoring program determines the sampling site selection. The fundamental reason for controlling air pollution sources is to limit the concentration of contaminants in

the atmosphere so that adverse effects do not occur. Sampling sites should therefore be selected to measure constituent levels close to or representative of exposed populations of people, plants, trees, materials, or structures. As a result, ambient air monitoring sites are typically located near ground level, about 3 meters above ground (Boubel, p. 192.), in a place where the results are not influenced by a nearby source such as a roadway. Sampling sites might require electrical power and adequate protection (which can be as simple as a fence). A shelter, such as a small building, might be necessary. Permanent sampling sites (when necessary) will require adequate heating and air conditioning to provide a stable environment for the sampling and monitoring equipment.

EPA Test Methods

EPA test methods are available for a variety of compounds and parameters, including but not limited to the following examples:

- Particulate Matter
- Volatile Organic Compounds (VOC)
- Sulfur Dioxide
- Nitrogen Oxide
- Visible Emissions
- Carbon Monoxide
- Hydrogen Sulfide
- Inorganic Lead
- Total Fluoride
- Landfill Gas (gas production flow rate)
- Nonmethane Organic Compounds (NMOC) (in landfill gases)
- Hydrogen Chloride
- Gaseous Organic Compounds
- Polychlorinated Dibenzo-p-dioxins and Polychlorinated Dibenzofurans
- Stack Gas Velocity and Volumetric Flow Rate
- Gas Analysis for Carbon Dioxide, Excess Air, and Dry Molecular Weight
- Moisture Content in Stack Gases

V. Sampling and Analytical Protocols and Quality Assurance and Quality Control

The best designed monitoring program will not provide useful data in the absence of sound sampling and analytical protocols. Sampling and analytical protocols are generally contaminant specific. A correctly designed and implemented sampling and analysis protocol helps ensure that sampling results accurately represent media quality and can be compared over time. The accurate representation is demonstrated through statistical analysis.

Whether or not an established quality assurance and quality control (QA/QC) program is required on a federal, state, or local level, it is a good management practice to develop and strictly implement such a plan. The sampling protocol should incorporate federal, state, and local QA/QC requirements. Sampling QA/QC procedures detail steps for collection and handling of samples. Sample collection, preservation, shipment, storage,

and analysis should be performed in accordance with an approved QA/QC program to ensure data of known quality are generated.

You should rely on qualified professionals who are properly trained to conduct sampling. Poorly-conducted sampling can give false evidence of a contamination problem or can miss early warnings of contaminant leaching. Erring in either direction is an avoidable and costly mistake.

At a minimum, you should include the following in your sampling protocol:

- Data quality objectives including lists of important tracking parameters, such as the date and name of samples.
- Sample collection procedures, including description of sample collection methods, and lists of necessary field analyses.
- Instructions for sample preservation and handling.
- Other QA/QC procedures such as chain-of-custody.
- The name of the person who conducted the sampling.

Quality control operations are defined by operational procedures and might contain the following components for an air monitoring program:

- Description of the methods used for sampling and analysis.
- Sampling manifold and instrument configuration.
- Appropriate multipoint calibration procedures.
- Zero/span checks and record of adjustments.
- Control specification checks and their frequency.
- Control limits for zero, span, and other control limits.
- The corrective actions to be taken when control limits are exceeded.
- Preventative maintenance.
- Recording and validation of data.
- Documentation of quality assurance activities.

States have developed guidance documents addressing sampling plans, protocols, and reports. You should work with the state to develop an effective sampling protocol.

- You should consult with soil specialists at the state and local environmental/planning offices, your local cooperative extension service office, or the county conservation district office before implementing a soil monitoring program for your unit. (For more information, visit the USDA Cooperative State Research, Education, and Extension Service Web site at: **<www.reeusda.gov/1700/statepartners/usa.htm>**). These agencies likely will be able to provide you with maps showing the location and extent of soils, data about the physical and chemical properties of soils, and information derived from the soil data about

potentialities and problems of use for the soils in your area. You can also consult the Natural Resources Conservation Service (NRCS) Web site at **<www.wv.nrcs.usda.gov>**. The NRCS manages the national cooperative soil survey program which is a partnership of federal land management agencies, state agricultural experiment stations, and state and local agencies that provide soil survey information necessary for understanding, managing, conserving, and sustaining soil resources. The NRCS maintains various on-line databases that can help you to characterize local soil.

- You should consult with air modeling professionals, state and local air quality offices, EPA Regional air program offices, or EPA's Office of Air Quality Planning and Standards (OAQPS) in Research Triangle Park, North Carolina, before implementing an air monitoring program for your unit or choosing alternative emission and dispersion models to evaluate risks associated with air emissions. For information concerning emission test methods, you can contact the Emission Measurement Center (EMC) within the Office of Air Quality Planning and Standards. The EMC is EPA's point of contact for providing expert technical assistance for EPA, state, and local officials and industrial representatives involved in emission testing. The Center has produced numerous methods of measuring air constituents emitted from a multitude of industries. A 24-hour automated telephone information hotline known as the "SOURCE" at 919 541-0200, provides callers with a variety of technical emission testing information. The SOURCE also includes connections to technical material through an automatic facsimile link and with technical staff during working hours. For more information concerning the EMC, visit EPA's Web site at: **<www.epa.gov/ttn/emc>**.

  OAQPS also maintains the Support Center for Regulatory Air Models (SCRAM). The SCRAM Web site <www.epa.gov/scram001> is a source of information on various atmospheric dispersion (air quality) models that support regulatory programs required by the Clean Air Act. The computer code, data, and technical documents provided by SCRAM deal with mathematical modeling for the dispersion of air constituents. Documentation and guidance for these computerized models are a major feature of the Web site.

A. Data Quality Objectives

In any sampling and analysis plan, it is important to understand the data needs for a monitoring program. Tailoring sampling protocol and analytical work to data needs ensures cost-efficient sampling. A sampling and analysis plan should specify: 1) clear objective, such as what data are needed and how the data are to be used, 2) target contaminants, and 3) level of accuracy requirements for data to be conclusive. Chapter 1 of EPA SW-846 *Test Methods for Evaluating Solid Waste* (U.S. EPA, 1986) and ASTM Guide D5792 provide guidance on developing data quality objectives for waste management activities.

B. Sample Collection

Sample collection techniques should be carefully designed to ensure sampling quality and avoid cross-contamination or background

contamination of samples. (As an example of some of the sample collection guidance available, Section A.4 of the *Annual Book of ASTM Standards* lists guides for ground-water sampling.) You should consider the following factors when preparing for sample collection.

- **Sample collection.** The equipment used to collect samples should be appropriate for the monitoring parameters. Sampling equipment should cause minimal agitation of the sample and reduce or eliminate contact between the sample and environmental contaminants during transfer to ensure it is representative.
- **Field analysis.** Some constituents or parameters can be physically or chemically unstable and should be tested in the field rather than waiting for shipment to a laboratory. Examples of unstable parameters include pH, redox (oxidation-reduction) potential, dissolved oxygen, temperature, and specific conductance.

C. Sample Preservation and Handling

Sample preservation and handling protocols are designed to minimize alterations of the chemistry of samples between the time the sample is collected and when it is analyzed. You should consider the following.

- **Sample containers.** To avoid altering sample quality, transfer samples from the sampling equipment directly into a contaminant free container. SW-846, identifies proper sample containers for different constituents and media. Samples should not be combined in a common sample container and then split later in the field.
- **Sample preservation.** The time between sampling and sample analysis can range from several hours to several weeks. Immediate sample preservation and storage assists in maintaining the natural chemistry of the samples. The latest edition of SW-846 provides specific preservation methods and holding times for each constituent analyzed. SW- 846 recommends preservation methods, such as pH adjustment, chemical addition, and refrigeration.
- **Sample transport.** To document sample possession from the time of collection to the laboratory, include a chain-of-custody record in every sample shipment. A chain-of- custody record generally includes the date and time of collection, signatures of those involved in the chain of possession, time and dates of possession, and other notations to trace samples.

D. Quality Assurance and Quality Control

To verify the accuracy of field sampling procedures, you should collect field quality control samples, such as trip blanks, field blank, equipment blanks, spilt samples, blinds, and duplicates. Table 5 below summarizes these common types of QA/QC samples. Analyze quality control samples for the required monitoring parameters. Other QA/QC practices include sampling equipment calibration, equipment decontamination, and use of chain-of-custody forms. ASTM Guide D-5283 *Standard Practice for Generation of Environmental Data Related to Waste Management Activities: Quality Assurance and Quality Control Planning and Implementation* provides guidance on QA/QC

Table 5 Types of QA/QC Samples

Type of Sample	Purpose	Frequency
Trip Blank Used for volatile organic compounds (VOCs) only. Trip blanks are prepared at the analyzing laboratory and transported to the field with the empty vials to be used in the VOC field sampling. They consist of a sealed vial filled with analyte-free water (i.e., de-ionized water). The water should be the same as the water the laboratory will use in analyzing the actual samples collected in the field, and include any preservatives or additives that will be used. They are handled, stored, and transported in the exact same manner as the field samples. Trip blanks should never be opened in the field.	Trip blanks provide a quality assurance test for detecting contamination from improper sample container (vial) cleaning prior to shipping to the field, the use of contaminated water in analyzing the samples in the laboratory, VOC contamination occurring during sample storage or transport, and any other environmental conditions that could result in VOC contamination of samples during the sampling event.	One trip blank for each cooler used during a sampling episode should be prepared for each volatile organic method to be used in the field. For example, if 2 volatile organic methods are to be used over 2 days with samples being sent to the lab at the end of each day, then a total of 4 trip blanks would be needed (i.e., Day 1: 1 cooler with samples from 2 methods = 2 trip blanks; Day 2: 1 cooler with samples from 2 methods = 2 trip blanks; total trip blanks = 4).
Field Blank A sample collected in the field by filling a vial with analyte-free water and all preservatives or additives that will be added to actual samples. Field blanks should be prepared under the exact same conditions in the same location as actual samples either in the middle or at the end of each sampling episode. They also should be handled, stored, and transported in the exact same manner as the actual samples.	Field blanks are used to evaluate the effects of onsite environmental contaminants, the purity of the preservatives and additives used, and general sample collecting and container filling.	One field blank should be prepared for each parameter being sampled and analyzed per day, or at a rate of 5 percent of the samples in a parameter group per day, whichever is larger. For example if 3 parameter groups were to be sampled over 2 days then 6 field blanks would be required (i.e., 3 parameter groups x 2 days = 6 field blanks).
Equipment Blank A sample prepared by pouring analyte-free water through or over a decontaminated piece of sampling equipment. The blank should be prepared on site. Equipment blanks should be handled, stored, and transported in the exact same manner as the actual samples.	Equipment blanks are used to determine the effectiveness of the field cleaning of sampling equipment. Generally, they are necessary when sampling equipment must be cleaned in the field and reused for subsequent sampling.	At least one equipment blank should be prepared for each piece of equipment used in sampling that must be field cleaned. Each time an equipment blank is required, a sample should be prepared for each parameter group being assessed. For example, if samples are taken for 3 parameter groups, and a piece of sampling equipment requires cleaning then a total of 3 equipment blanks will be required for each required cleaning (i.e., 1 piece of equipment x 3 parameter groups = 3 equipment blanks per cleaning).

Table 5 Types of QA/QC Samples (cont.)

Type of Sample	Purpose	Frequency
Split (Replicate) Sample A sample that is divided into 2 or more containers and sent for analysis by separate laboratories.	Split samples are used to assess sampling and analytical techniques. Samples can be divided into portions (split) at different points in the sampling and analysis process to assess the precision of various components of the sampling and analysis system. For example, a sample split in the field (field replicate) is used to assess sample storage, shipment, preparation, analysis, and data reduction. A sample split just prior to laboratory analysis (analysis replicate) is used to assess the precision of analytical instrumentation.	(No guidance on frequency provided)
Duplicates Samples collected simultaneously from the same source under identical conditions (e.g., same type of sampling techniques and equipment).	Duplicate samples are used to assess the precision of sampling techniques and laboratory equipment.	(No guidance on frequency provided)
Blinds A sample prepared prior to a sampling episode by the laboratory or an independent source. The blind contains a specific amount of analyte known by the preparer, but that is unknown to the analyst at the time of analysis.	Blinds are used to validate the accuracy and precision of the analyzing laboratories sample analyses.	(No guidance on frequency provided)

planning and implementation for waste management activities. Chapter 1 of SW-846 also provides guidance on QA/QC practices.

E. Analytical Protocols

Monitoring programs should employ analytical methods that accurately measure the constituents being monitored. SW-846 recommends specific analytical methods to test for various constituents. Similarly, individual states might recommend other analytical methods for analysis.

Ensure the reliability and validity of analytical laboratory data as part of the monitoring program. Most facility managers use commercial laboratories to conduct analyses of samples; others might use their own internal laboratories if they are equipped and qualified to perform such analyses. In selecting an analytical laboratory, check for the following: laboratory certification by a state or professional association for the type of analyses needed; qualified lab personnel; good quality analytical equipment with back-up instrumentation; a laboratory QA/QC program; proper lab documentation; and adherence to standard procedures for data handling, reporting, and record keeping. Laboratory QA/QC programs should describe chain-of-custody procedures, calibration procedures and frequency, analytical

standard operating procedures, and data validation and reporting procedures. A good QA/QC program helps ensure the accuracy of laboratory data.

VI. Analysis of Monitoring Data, Contingency Planning, and Assessment Monitoring

Once monitoring data have been collected, the data are analyzed to determine whether contaminants are migrating from a waste management unit. You should develop a contingency plan to address the situations where contamination is detected.

A. Statistical Approaches

Statistical procedures should be used to evaluate monitoring data and determine if there is evidence of a release from a waste management unit. Anomalous data can result from sampling uncertainty, laboratory error, or seasonal changes in natural site conditions. Qualified statistical professionals can determine if statistically significant changes have occurred or whether the quantified differences could have arisen solely because of one of the above-listed factors. Selecting the appropriate statistical method is very important to avoid generating false positive or false negatives. In monitoring groundwater, for example, the selection of the appropriate statistical method will be contingent upon an adequate review and evaluation of the background groundwater data. These data should be evaluated for properties such as independence, trends, detection frequency and distribution (e.g., normal or lognormal). Examples of two statistical approaches include inter-well (upgradient vs. downgradient) or intra-well comparisons. After consulting with the state agency and statistical professional and selecting a statistical approach, continue to use the selected method in all statistical analyses. Do not switch to a different test when the first method generates unfavorable results.

What is important in selecting a statistical approach?

An appropriate statistical approach will minimize false positives or negatives in terms of potential releases. The approach should account for historical data, site conditions, site operating practices, and seasonal variations. While there are numerous statistical approaches used to evaluate monitoring data, check with the state to determine if a specific statistical approach is recommended.

Common methods for evaluating monitoring data include the following statistical approaches:

- **Tolerance intervals.** Tolerance intervals are statistical intervals constructed from data designed to contain a portion of a population, such as 95 percent of all sample measurements.
- **Prediction intervals.** These intervals approximate future sample values from a population or distribution with a specific probability. Prediction

intervals can be used both for comparison of current monitoring data to previous data for the same site.

- **Control charts.** These charts use historical data for comparison purposes and are, therefore, only appropriate for initially uncontaminated sites.

There are many different ways to select an appropriate statistical method. For more detailed guidance on statistical methods for ground-water contaminant detection monitoring, consult *Addendum to Interim Final Guidance Document on Statistical Analysis of Ground-Water Monitoring Data at RCRA Facilities* (U.S. EPA, 1993); *Guidance Document on Statistical Analysis of Ground-Water Monitoring Data at RCRA Facilities-Interim Final Guidance* (U.S. EPA, 1989); and ASTM provisional guide PS 64- 96 in the *Annual Book of ASTM Standards*.

B. Contingency Planning

Contingency plans identify the procedures to follow if a statistically significant change in one or more constituents has been detected. A contingency plan should include procedures to determine whether a change in sample concentrations was caused by the waste management unit or by unrelated factors; procedures for developing and conducting an assessment monitoring program; procedures for remediating the waste management unit to stop the release of contaminants; and a determination of the magnitude of contamination that would require initiation of corrective action, such as a statistical exceedance of an HBN, an MCL for surface or ground water, or a site-specific risk-based number.

C. Assessment Monitoring

The purpose of assessment monitoring is to evaluate the rate, extent, and concentrations of contamination. Once a statistically significant change has been confirmed for one or more of the sampling parameters, you should determine whether the change was caused by factors unrelated to the unit. Factors unrelated to the unit that might cause a change in the detected concentration(s) are:

- Contaminant sources other than the waste management unit being monitored.
- Natural variations in the quality of the media being monitored.
- Analytical errors.
- Statistical errors.
- Sampling errors.

If the change was caused by a factor unrelated to the unit, then additional measures might not be necessary and the original monitoring program can be resumed. If, however, these factors have been ruled out, you should begin an assessment monitoring program. You should consult with the state agency to determine the type of assessment monitoring to conduct at the unit. Assessment monitoring typically involves resampling at all sites, and analyzing the samples for a larger list of parameters than used during the basic monitoring program. More than one sampling event might be necessary and additional monitoring might need to be performed to adequately determine the scope or extent of any contamination. It is recommended that you work with state officials to establish background concentrations and protection standards for all additional constituents that were detected during assessment monitoring.

If assessment monitoring results indicate there is not a statistically significant change in the concentrations of one or more of the constituents over the established protection standards, then you can resume the original monitoring program. If, however, there is a

statistically significant change in any of these constituents, consult with state officials to identify the next steps. It might be necessary to perform additional monitoring to characterize the nature and extent of the contamination and to notify persons who own or reside on any land directly impacted by the contamination if it has migrated beyond the facility boundary.

Detection of contamination can be an indicator that the waste management unit's containment system is not working properly. During this assessment phase, component(s) of the unit (cover, liner, or leachate collection system) that are not working properly should be identified and, if possible, remediated. For example, sometimes sealing a hole in the liner of a small surface impoundment can be sufficient to stop the source of contamination. Other times, more extensive response might be required. One example could be the extensive subsidence of a unit's final cover creating the need for repair. In some cases, liner and leachate collection system repairs might not be possible, such as in a large surface impoundment or a landfill with several tons of waste already in place. If remediation is not possible, consult with state officials about beginning assessment monitoring and consult Chapter 10–Taking Corrective Action.

Monitoring Performance Activity List

You should consider the following for each media when developing a monitoring program for industrial waste management units:

Ground Water

- ❑ Perform a site characterization, including investigation of the site's geology, hydrology, and subsurface hydrogeology to determine areas for ground-water monitoring; select parameters to be monitored based on the characteristics of the waste managed.
- ❑ Identify qualified engineers and ground-water specialists to assist in designing and operating the ground-water monitoring program.
- ❑ Consult with qualified professionals to identify necessary program components including the monitoring well design, the number of monitoring wells, the lateral and vertical placement of the wells, the duration and frequency of monitoring, and the appropriate sampling parameters.
- ❑ Determine the appropriate method(s) of ground-water monitoring, including conventional well monitoring, direct push sampling, geophysical monitoring, and vadose zone monitoring as possibilities.
- ❑ Use qualified laboratories to analyze samples.

Surface Water

- ❑ Collect and analyze samples according to the requirements of a site's federal or state storm-water permit.
- ❑ If not subject to permit requirements, implement a storm-water sampling program to monitor the quality of runoff and determine the effectiveness of BMPs.
- ❑ If applicable, collect and analyze discharges to POTWs according to any requirements of a local pretreatment program.
- ❑ Implement a surface-water sampling program to monitor water quality and determine the effectiveness of BMPs.
- ❑ Perform regular inspections and maintenance of surface-water protection measures and BMPs to reduce the potential for surface-water contamination.
- ❑ Use qualified laboratories to analyze samples.

Soil Monitoring

- ❑ Determine the number and location of samples needed to adequately characterize soil according to the variability of the soil at a site.
- ❑ Follow established soil-sampling procedures to obtain meaningful results.
- ❑ Use qualified laboratories to analyze samples.

Monitoring Performance Activity List (cont.)

- ❑ Determine baseline soil conditions by sampling prior to waste application.
- ❑ Collect and analyze samples at regular intervals to detect contaminant problems.

Air Monitoring

- ❑ Use the Industrial Waste Air (IWAIR) Model to evaluate risks from VOC emissions.
- ❑ Use an alternative emissions model if the IWAIR Model indicates a problem with VOC emission or is not appropriate for your site.
- ❑ If collecting air monitoring data, determine the type of monitoring necessary to evaluate the effectiveness of air pollution control techniques employed on site or for input into air emissions and dispersion models.
- ❑ Select the proper test methods.
- ❑ Establish guidelines to ensure the quality of the data collected prior to implementing an air monitoring program.
- ❑ Consult with air modeling professionals, state and local air quality offices, EPA regional air program offices, or EPA's Office of Air Quality Planning and Standards before implementing an air monitoring program or choosing an alternative emission model to evaluate risks.
- ❑ Use qualified laboratories to analyze samples.

Sampling and Analytical Protocols QA/QC

- ❑ Develop sample collection, preservation, storage, transport, and handling protocols tailored to data needs, and establish quality assurance and quality control procedures to check the accuracy of the monitoring samples.
- ❑ Eliminate cross-contamination or background contamination of any samples by purging the wells, using appropriate sampling equipment, and ensuring that any unstable parameters, such as pH, dissolved oxygen, and temperature, have been tested at the site.
- ❑ Identify the appropriate analytical methods and statistical approach for the sampling data including parametric analysis of variance (ANOVA), tolerance intervals, prediction intervals, and control charts as possibilities.
- ❑ Evaluate the need for assessment monitoring and abatement.

Resources

Site Characterization

American Society for Testing and Materials. 2001. Annual Book of ASTM Standards. ASTM.

American Society for Testing and Materials. 1994. ASTM Standards on Ground Water and Vadose Zone Investigations, 2nd Edition. ASTM.

ASTM D-1452. 1980. Practice for Soil Investigation and Sampling by Auger Borings.

ASTM D-1586. 1984. Test Method for Penetration Test and Split-Barrel Sampling of Soils

ASTM D-1587. 1983. Practice for Thin-Walled Tube Sampling of Soils.

ASTM D-3550. 1988. Practice for Ring-Lined Barrel Sampling of Soils..

ASTM D-4220. 1989. Practices for Preserving and Transporting Soil Samples.

ASTM D-5792. 1995. Standard Practice for Generation of Environmental Data Related to Waste Management Activities: Development of Data Quality Objectives.

Boulding, J.R. 1995. Practical Handbook of Soil, Vadose Zone, and Ground Water Contamination: Assessment, Prevention and Remediation. Lewis Publishers.

CCME. 1994. Subsurface Assessment Handbook for Contaminated Sites, CCME EPC-NCSRP-48E, Canadian Council of Ministers of the Environment.

Morrison, R.D. 1983. Groundwater Monitoring Technology. Timco Mfg. Inc.

Sara, M.N. 1994. Standard Handbook for Solid and Hazardous Waste Facility Assessments. Lewis Publishers.

Topp, G.C. and J.L. Davis. 1985. "Measurement of Soil Water Using Time-Domain Reflectometry (TDR): A Field Evaluation," Soil Science Society of America Journal. 49:19-24.

U.S. EPA. 1993. Subsurface Characterization and Monitoring Techniques: A Desk Reference Guide. Volume I: Solids and Ground Water, Appendices A and B. EPA625-R-93-003a.

U.S. EPA. 1993. Subsurface Characterization and Monitoring Techniques: A Desk Reference Guide. Volume II: The Vadose Zone, Field Screening and Analytical Methods, Appendices C and D. EPA625- R-93-003b.

Resources (cont.)

U.S. EPA. 1988. Criteria for Municipal Solid Waste Landfills: Draft background Document. EPA530- SW-88-042.

U.S. EPA. 1987. DRASTIC: A Standardized System for Evaluating Ground Water Pollution Potential Using Hydrogeologic Settings. EPA600-2-87-035.

Wilson, L.G., L.G. Everett, and S.J. Cullen (eds.). 1995. Handbook of Vadose Zone Characterization and Monitoring. Lewis Publishers.

Ground-Water Monitoring Well Design, Installation, and Development

Cullen, S.J. 1995. Vadose Zone Monitoring: Experiences and Trends in the United States. Ground Water Monitoring Review 15(3):136-143.

Cullen, S.J., J.K. Kramer, and J.R. Luellen. 1995. A Systematic Approach to Designing a Multiphase Unsaturated Zone Monitoring Network. Ground Water Monitoring Review 15(3):124-135.

Geoprobe Systems. 1996. Geoprobe Prepacked Screen Monitoring Well: Standard Operating Procedure. Technical Bulletin No. 96-2000.

Hayes, J.P. and D.C. Tight. 1995. Applying Electrical Resistance Blocks for Unsaturated Zone Monitoring at Arid Sites. Handbook of Vadose Zone Characterization and Monitoring. L.G. Wilson, L.G. Everett, and S.J. Cullen (eds.). Lewis Publishers. pp. 387-399.

Kramer, J.H., S.J. Cullen, and L.G. Everett. 1992. Vadose Zone Monitoring with the Neutron Moisture Probe. Ground Water Monitoring Review 12(3):177-187.

Ohio Environmental Protection Agency. 1995. Technical Guidance Manual for Hydrogeologic Investigations and Ground Water Monitoring.

Robbins, G.A. and M.M. Gemmell. 1985. Factors Requiring Resolution in Installing Vadose Zone Monitoring Systems. Ground Water Monitoring Review 5:76-80.

U.S. EPA. 1993a. Ground-Water Monitoring: Draft Technical Guidance. EPA530-R-93-001.

U.S. EPA. 1993b. Solid Waste Disposal Facility Criteria: Technical Manual. Chapter 5. EPA530-R-93- 017.

U.S. EPA. 1991. Handbook: Ground Water. Volume II: Methodology. EPA625-6-90-016b.

Resources (cont.)

U.S. EPA. 1990. Handbook: Ground Water. Volume I: Ground Water and Contamination. EPA625-6-90- 016a.

U.S. EPA. 1989. Handbook of Suggested Practices for the Design and Installation of Ground-Water Monitoring Wells. EPA600-4-89-034.

Sample Procedures

ASTM. D-5283. 1997. Standard Practice for Generation of Environmental Data Related to Waste Management Activities: Quality Assurance and Quality Control Planning and Implementation.

Benson, R.C., R.A. Glaccum, and M.R. Noel. 1984. Geophysical Techniques for Sensing Buried Wastes and Waste Migration. EPA600-7-84-064.

Bond, W.R. 1995. Case Studies of Vadose Zone Monitoring and Sampling Using Porous Suction Cup Samplers. Handbook of Vadose Zone Characterization and Monitoring. L.G. Wilson, L.G. Everett, and S.J. Cullen (eds.). Lewis Publishers. pp. 523-532.

Federal Remediation Technologies Roundtable. 2001. Field Sampling and Analysis Technologies Matrix. Version 1.0. **<www.frtr.gov/site>**

Gibbons, R.D. 1990. Estimating the Precision of Ground-Water Elevation Data. Ground Water, 28, 357- 360.

Minnesota Pollution Control Agency. 1995. Ground Water Sampling Guidance: Development of Sampling Plans, Protocols and Reports.

Texas Natural Resource Conservation Commission. 1994. TNRCC Technical Guidance: Guidelines for Preparing a Ground-Water Sampling and Analysis Plan (GWSAP).

Thomson, K.A. 1995. Case Studies of Soil Gas Sampling. Handbook of Vadose Zone Characterization and Monitoring. L.G. Wilson, L.G. Everett, and S.J. Cullen (eds.). Lewis Publishers. pp. 569-588.

U.S. EPA. 1995a. Ground Water Sampling—A Workshop Summary. EPA600-R-94-205.

U.S. EPA. 1995b. Laboratory Methods for Soil and Foliar Analysis in Long-term Environmental Monitoring Program. EPA600-R-95-077

Resources (cont.)

U.S. EPA. 1995c. Low Flow Ground-Water Sampling. EPA540-S-95-504.

U.S. EPA. 1994a. Industrial User Inspection and Sampling Manual for POTWs.

U.S. EPA. 1994b. Region VIII Guidance, Standard Operating Procedures for Field Sampling Activities.

U.S. EPA. 1992. NPDES Storm Water Sampling Guidance Document. EPA833-B-92-001.

U.S. EPA. 1991. Description and Sampling of Contaminated Soils: A Field Pocket Guide. EPA625-12-91-002

U.S. EPA. 1989. Interim Final RCRA Facility Investigation (RFI) Guidance: Volumes I-III. EPA530- SW-89-031.

U.S. EPA. 1986. Test Methods for Evaluating Solid Waste—Physical/Chemical Methods. EPA SW-846, 3rd edition. PB88-239-233.

Surface Water Monitoring

Novotny, V., and H. Olem. 1994. Water Quality: Prevention, Identification, and Management of Diffuse Pollution. Van Nostrand Reinhold.

U.S. EPA. 1999. Introduction to the National Pretreatment Program. EPA833-B-98-002.

U.S. EPA. 1997. Volunteer Stream Monitoring Document. EPA841-B-97-003.

U.S. EPA. 1991. Volunteer Lake Monitoring Document. EPA440-4-91-002.

Soil Monitoring

Delaware Cooperative Extension Service. 1995. Recommended Soil Testing Procedures for the Northeastern United States. 2nd Edition. Northeastern Regional Publication No. 493.

North Carolina Cooperative Extension Service. 1994. Soil facts: Careful Soil Sampling - The Key to Reliable Soil Test Information. AG-439-30.

Rowell, D.L. 1994. Soil Science: Methods and Applications.

Soil Quality Institute of the National Resources Conservation Service, USDA. 2001. Guidelines for Soil Quality Assessment in Conservation Planning. **<www.statlab.iastate.edu/survey/SQI/>**

Resources (cont.)

University of Nebraska Cooperative Extension Institute of Agriculture and Natural Resources. 1991. Guidelines for Soil Sampling. G91-1000-A. February. **<www.ianr.unl.edu/pubs/soil/g1000.htm>**

U.S. EPA. 1995d. Laboratory Methods for Soil and Foliar Analysis in Long-Term Environmental Monitoring Programs. EPA600-R-95-077.

U.S. EPA. 1989. RCRA Facility Investigation Guidance: Volume II: Soil, Ground Water and Subsurface Gas Releases. EPA530-SW-89-031

Air Monitoring

Boubel, R. W., D. L. Fox, D. B. Turner, and A. C. Stern. 1994. Fundamentals of Air Pollution. 3rd Edition. Academic Press.

Stull, Roland B. 1988. An Introduction to Boundary Layer Meteorology. Kluwer Academic Publishers.

Yoest, H. and R. W. Fitzgerald. February 1996. Chemical Engineering Progress. Stationary Source Testing: The Fundamentals.

U.S. EPA. 1993. Air/Superfund National Technical Guidance Study Series: Compilation of Information on Real-time Air Monitoring for Use at Superfund Sites. EPA451-R-93-008.

U.S. EPA. 1993. Air/Superfund National Technical Guidance Study Series: Volume 4: Guidance for Ambient Air Monitoring at Superfund Sites, Revised. EPA451-R-93-007.

U.S. EPA. 1990. Guidance on Applying the Data Quality Objectives Process for Ambient Air Monitoring Around Superfund Sites (Stages 1 and 2). EPA450-4-90-005.

U.S. EPA. 1990. Air/Superfund National Technical Guidance Study Series: Contingency Plans at Superfund Sites Using Air Monitoring. EPA450-1-90-005.

U.S. EPA. 1989. Air/Superfund National Technical Guidance Study Series, Volume 4: Procedures for Dispersion Modeling and Air Monitoring for Superfund Air Pathway Analysis, Interim Report, Final. EPA450-1-89-004.

U.S. EPA. 1986. Test methods for Evaluating Solid Waste. 3rd Edition. Office of Solid Waste and Emergency Response. SW-846.

Statistical References

Davis, C.B. and McNichols, R.J. 1987. One-Sided Intervals for at Least p of m Observations from a Normal Population on Each of r Future Occasions. Technometrics, 29, 359-370.

Resources (cont.)

Gibbons, R.D. 1994. Statistical Methods for Ground-Water Monitoring. John Wiley & Sons.

Gibbons, R.D. 1992. An Overview of Statistical Methods for Ground-Water Detection Monitoring at Waste Disposal Facilities. In Ground-Water Contamination at Hazardous Waste Sites: Chemical Analysis. S. Lesge and R.E. Jackson (eds.), New York: Marcel Dekker, Inc.

Gibbons, R.D., Dolan, D., Keough, H., O'Leary, K., and O'Hara, R. 1992. A Comparison of Chemical Constituents in Leachate from Industrial Hazardous Waste and Municipal Solid Waste Landfills. Proceedings of the Fifteenth Annual Madison Waste Conference, University of Wisconsin, Madison.

Gibbons, R.D., Gams, N.E., Jarke, F.H., and Stoub, K.P. 1992. Practical Quantitation Limits. Chemometrics and Intelligent Laboratory Systems, 12, 225-235.

Gibbons, R.D. 1991. Some Additional Nonparametric Prediction Limits for Ground-Water Monitoring at Waste Disposal Facilities. Ground Water, 29, 729-736.

Gibbons, R.D., Jarke, F.H., and Stoub, K.P. 1991. Detection Limits: For Linear Calibration Curves with Increasing Variance and Multiple Future Detection Decisions. Waste Testing and Quality Assurance. 3, ASTM, SPT 1075, 377-390.

Gibbons, R.D. and Baker, J. 1991. The Properties of Various Statistical Prediction Limits. Journal of Environmental Science and Health. A26-4, 535-553.

Gibbons, R.D. 1991. Statistical Tolerance Limits for Ground-Water Monitoring. Ground Water 29.

Gibbons, R.D. 1990. A General Statistical Procedure for Ground-Water Detection Monitoring at Waste Disposal Facilities. Ground Water, 28, 235-243.

Gibbons, R.D., Grams, N.E., Jarke, F.H., and Stoub, K.P. 1990. Practical Quantitation Limits. Proceedings of Sixth Annual U.S. EPA Waste Testing and Quality Assurance Symposium. Vol. 1, 126-142.

Gibbons, R.D., Jarke, F.H., and Stoub, K.P. 1989. Methods Detection Limits. Proceedings of Fifth Annual U.S. EPA Waste Testing and Quality Assurance Symposium. Vol. 2, 292-319.

Gibbons, R.D. 1987. Statistical Prediction Intervals for the Evaluation of Ground-Water Quality. Ground Water, 25, 455-465.

Resources (cont.)

Gibbons, R.D. 1987. Statistical Models for the Analysis of Volatile Organic Compounds in Waste Disposal Facilities. Ground Water 25, 572-580.

Gilbert, R.O. 1987. Statistical Methods for Environmental Pollution Monitoring. Van Nostrand Reinhold, New York.

Starks, T.H. 1988. Evaluation of Control Chart Methodologies for RCRA Waste Sites. U.S. EPA Technical Report CR814342-01-3.

Patil, G.P. and Rao, C.R. eds, Elsevier. 1993. Handbook of Statistics, Vol 12: Environmental Statistics.

U.S. EPA. 1993. Addendum to Interim Final Guidance Document Statistical Analysis of Ground-Water Monitoring Data at RCRA facilities. EPA530-R-93-003.

U.S. EPA. 1989. Guidance Document on Statistical Analysis of Ground-Water Monitoring Data at RCRA Facilities–Interim Final Guidance.