Chapter 3
Non-incineration Treatment Technologies and Trends

Of the still unresolved issues regarding medical waste management, one of the most critical is which technologies and controls are most appropriate for treatment.[1] Clearly, the answer depends on the particular circumstances of the medical waste generator and the host community for the treatment facility. Factors such as the nature (quantity and types) of the medical waste, the availability of permitted landfill space, local air quality conditions, and other demographic and geographic factors (e.g., urban v. rural locations) need to be considered when selecting the most appropriate management strategy. Safety, reliability, and costs of alternative treatment methods and the regulatory certainty associated with their use also affect selection of treatment alternatives. Knowledge of various incineration and non-incineration alternatives can also facilitate adoption of medical waste policies at all levels of government.

While some States and localities actively encourage incineration as a preferred method of treatment, others have enacted moratoriums on incinerators to suspend permitting until further information on the safety of the option is available or new regulations governing it are completed. Thus, incompleteness and uncertainty characterize regulatory activity for medical waste management.

The dilemma now facing New York State facilities, for example, can occur elsewhere depending upon how a State adopts regulations. Facilities there must make management decisions regarding whether to upgrade existing on-site incinerators no later than the fall of 1990 in order to be able to meet New York State's new air quality standards by January 1, 1992. At present many facilities are seeking treatment technologies alternative to incineration; however, to date the State Health Department has not developed and implemented standards for the approval of treatment alternatives. As a result, the State government is limiting the available treatment technologies to the previously approved methods of incineration and autoclaving. This delay in the evaluation and approval of alternative technologies may prevent many New York State facilities from using them, including technology already approved in other States and/or technology which could be more attractive from both financial and environmental perspectives (94).

This chapter, based on available information, addresses the variety of available and emerging non-incineration treatment alternatives, their technical capabilities, and their risks and costs. First, treatment of medical wastes by autoclaving (i.e., a process of steam sterilization), the most frequently employed alternative to incineration, is discussed. Then, a number of other alternative treatments are examined: steam disinfection and compaction; mechanical/chemical disinfection; microwaving; irradiation; and other emerging treatment technologies.[2] Chapter 4 discusses various incineration options, including co-incineration and regional incineration, and pollution control issues, as well as risk and cost implications. A comparison of non-incineration and incineration treatment alternatives is included in chapter 6.

Increasingly, questions are raised about the availability and performance of non-incineration treatment alternatives for medical wastes. While the majority of medical waste is autoclaved or incinerated, some medical waste (treated or untreated) is landfilled, including some categories of infectious wastes. The State of Washington found in its survey of medical facilities that some infectious wastes are about as frequently treated by autoclaving as by incineration (139). In addition, other treatment methods, including disposal into the sewer system, are not rare. It should be noted again that most treatment alternatives some form of solid waste disposal, usually either incineration or landfilling, will be necessary.

[1]It should be noted that treatment in this report refers to a process to render wastes noninfectious, unless otherwise indicated, such as treatment to reduce toxicity of wastes, or treatment to render wastes nonrecognizable.

[2]This chapter relies on the OTA contract report, "Medical Waste Treatment Technologies," completed by Robert Spurgin, Spurgin & Associates, March 1990. See also (30) and (73). **It should be noted that mention of a specific company or treatment technology does not constitute endorsement of it by OTA. OTA does not endorse any specific application of the various incineration and nonincineration treatment alternatives.**

The viability of alternative technologies has increased in recent years due to the increased cost of incineration, the difficulty associated with permitting incinerators, and the perceived desirability of reducing dependence on incinerators given concerns over their emissions. A number of States (e.g., New Jersey, California, Washington) are attempting to encourage adoption of alternative technologies for such reasons. EPA is conducting several research projects to evaluate various waste treatment technologies as required by MWTA (92).

The extent of detail contained in these EPA studies is not known, but the Agency does report that "most of the treatment technologies are as effective [as incineration] in rendering medical waste noninfectious" (141). In addition to the usually higher capital, maintenance, and operating costs of incineration, EPA cites the public perception problems and uncertain regulatory climate associated with incineration as disadvantages of incineration compared to alternative treatment technologies (141). Landfill availability and other factors, however, will also influence a medical or health-care facility's choice of treatment technology.

Alternative treatment technologies are less capital intensive and have fewer emission concerns than incineration processes. Although it is important to recognize that oftentimes more than one treatment technology may be needed to manage all components of the waste stream (e.g., incineration of pathological wastes that cannot be autoclaved). Further, the nature of emissions and efficacy of new treatment technologies must be demonstrated.

AUTOCLAVING

Historically, autoclaving or steam sterilization has been used as a treatment method in laboratory settings to sterilize microbiological laboratory cultures (104).[3] The first commercial steam sterilization process for *medical infectious waste* was introduced in California in 1978. As incineration requirements were tightening in California, it became clear that insufficient off-site capacity existed to replace closed on-site incinerators, which would not meet the State air emission standards (see ch. 5).

Autoclaving is a process by which wastes are either sterilized or disinfected prior to disposal in a landfill (114) (see figure 2).[4] Autoclaving can be a sterilization process if all microorganisms are exposed to the steam for a sufficient temperature/pressure/time period to assure their destruction. The routine achievement of sterilization can be monitored by placing *Bacillus stearothermophilus* spores into the center of a load to be autoclaved. If the spores survive, then the conditions for sterilization have not been achieved; if the spores are destroyed (i.e., fail to grow in microbiological media after steam sterilization), then the conditions for sterilization have been achieved (given the practical limitations of this routine test).

If the spores have not been destroyed during steam sterilization, then sterilization has not occurred. However, some level of *disinfection* of the waste would likely have resulted. Unfortunately, the level of disinfection cannot be routinely or practically measured. Sterilization of infectious waste is generally regarded as "overkill" for most waste disposal situations. Disinfection of infectious waste is probably a more reasonable goal for most infectious wastes, though some appropriate and measurable disinfection goal should be established (111).

Most steam sterilizers in use for treating infectious wastes are of the high-vacuum type (92). In the autoclaving process, bags of infectious waste are placed in a chamber and steam is introduced for a determined period of time (usually about 15 to 30 minutes) and pressure. The use of pressure helps reduce the required time for disinfection of medical wastes, yet the amount of time required will still vary depending on the type and volume of waste (141). Steam temperatures are usually maintained at 250 °F or slightly higher (to disinfect the waste more quickly and allow for shorter cycle times).

Autoclaving parameters, e.g., temperature and residence/cycle time, are determined by the factors influencing the penetration of steam to the entire

[3]Ethylene oxide and other gas sterilization processes are typically used to sterilize processes for medical equipment, but are also sometimes used to treat wastes. EPA, however, does not recommend ethylene oxide for treating infectious wastes because of its toxicity and given that other treatment options are available (122).

[4]Sterilization is a process that destroys all microorganisms (e.g., pathogens). Disinfection is a process intended to reduce the number of microorganisms or pathogens as low a level as possible, at least below the level at which exposure to a susceptible host could not result in an infectious disease. Actual sterilization is not likely to be maintained once wastes leave the autoclave, as is true of incineration ash residue (see studies cited in 134), thus, disinfection is a more accurate term.

Figure 2—Autoclave

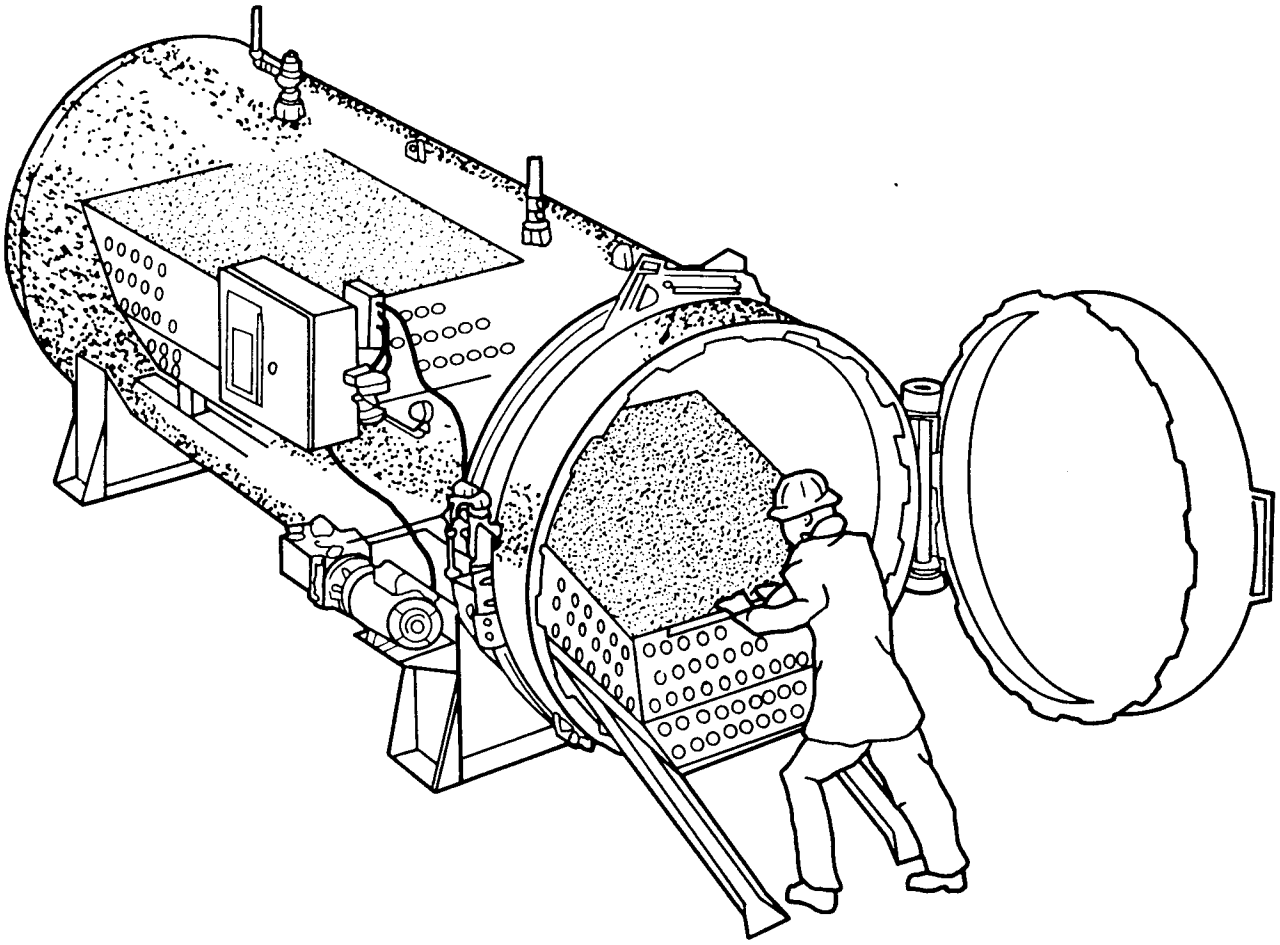

SOURCE: AMSCO, Erie, PA.

load and consequently the extent of pathogen destruction (114, 30) (see figure 3).[5] Generally, complete pathogen destruction should occur if sterilization is the goal of treatment (92; see discussion in 114).

A major advantage of autoclaving is its ability to scale to various on-site and off-site treatment requirements, including the possibility of multiple units that can be located close to the areas where wastes are generated. Most health-care facilities do not use the largest available autoclaves and some companies are beginning to market smaller, tabletop units for use by doctors' offices and other small generators (141). Autoclaving is considered appropriate for treating most regulated medical wastes, except pathological wastes (see below). Commercial spore indicator kits provide easy and reliable quality control capabilities for autoclave systems if sterilization is the goal of treatment (141, 92).[6]

Capacity and Siting Issues

Browning-Ferris Industries (BFI), the largest off-site waste management company for medical wastes, has employed autoclaving since 1976. Other large waste management companies and regional waste management firms use autoclaves as well (104). Indeed, one large waste management firm

[5]See OTA's background paper (114) on medical waste for a more complete description of the autoclaving process and operating parameters.

[6]If disinfection is the goal of treatment, spore strip testing would not have a use.

Figure 3—Typical Sterilization Destruction Curve

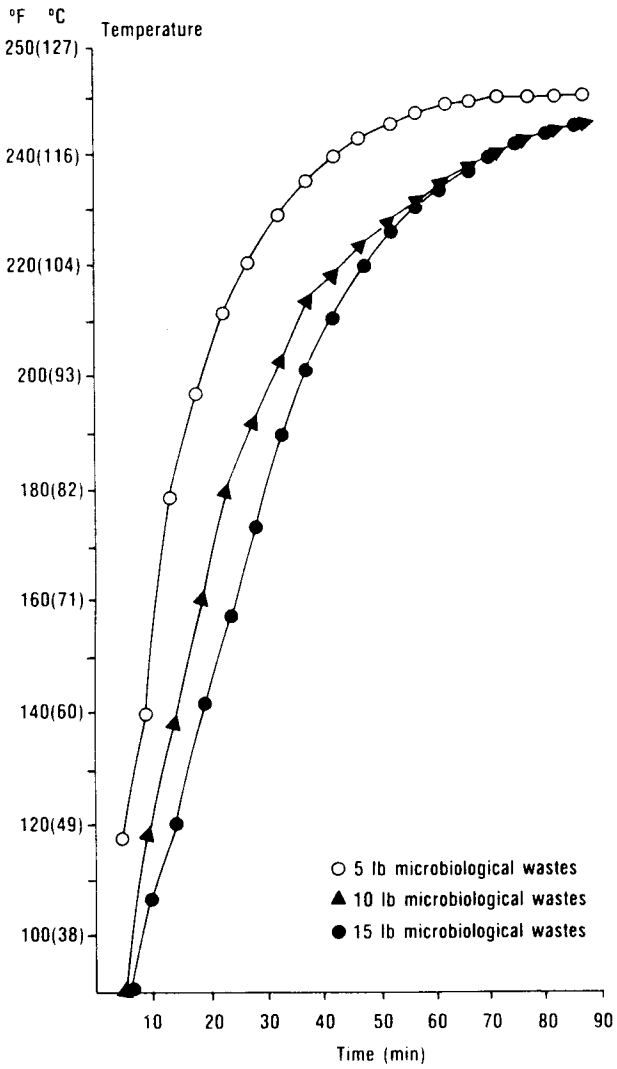

SOURCE: William Rutala et al., "Decontamination of Microbiological Waste by Steam Sterilization," *Applied Environmental Microbiology*, vol. 33, 1982.

reports that it is currently siting more autoclaves than incinerators. Meanwhile, some hospitals continue to use on-site autoclaves for treating their own medical waste. The demand for autoclaving appears to be increasing across the Nation, as the rest of the country begins to experience the shift from heavy reliance on incineration and the increased need for off-site medical waste treatment that emerged in California in the late 1970s.

A major advantage of autoclaving is the capacity a single unit can provide without the spatial requirements associated with incineration systems. The capacity of an autoclave is a function of its size and throughput.[7] For example, an autoclave capable of disinfecting 4,000 pounds per hour of medical waste measures 8 feet in diameter by 24 feet in length, which means it occupies about as much space as a 500-pound-per-hour incinerator (104).

Autoclaving may be limited in some applications because wastes that are only autoclaved are still recognizable—unless they are then shredded or compacted (see below).[8] EPA points out that the "recognizability" of medical wastes is only an issue in States covered by MWTA and that most States have not found it necessary or practical to adopt such a requirement (141). The potentially high costs of requiring the nonrecognizability of treated wastes have led some to question the wisdom of a requirement to address solely an aesthetic concern.

In the past, landfill refusals of autoclaved medical wastes frequently occurred. A variety of reasons account for these refusals, but usually they happened because landfill operators could not easily identify whether waste had been treated and disinfected. Efforts to use bags that change in some visible way in response to autoclaving (e.g., that melt in the autoclaving process or have a strip that changes color) apparently have met with mixed results (104). A nonrecognizability requirement is one solution to this problem, albeit a potentially costly one.

Another solution is for commercial users to have their own private, permitted landfills for disposal. Informal discussions by OTA with a number of hospital officials across the country indicate, however, that few refusals occur if a hospital works closely with landfill operators to explain their waste procedures. The State of Washington reports from its 1989 survey that 86 percent of the hospitals responding to the survey have not had a waste collector or landfill refuse to accept its waste because of its potentially infectious nature (139).

For States under the MWTA program, wastes must be treated and destroyed or rendered nonrecognizable to be exempt from the tracking program. This would necessitate that some form of shredding

[7]The size of the autoclave loading hopper and the cycle time needed for disinfection, however, affect and limit autoclave throughput (63).

[8]Historically, problematic operation has also been a factor leading some hospitals to abandon autoclaving (114). Apparently, recent improvements in the technology have minimized some of these concerns. Proper operation, however, is key to the effective functioning of any treatment technology.

be employed before shipping the autoclaved waste off-site; otherwise use of the manifest form would be required to meet the tracking requirements. **An option for Congress is to amend MWTA (or related follow-ons) to allow verified autoclaved wastes to be exempt from manifesting. This essentially means modifying the nonrecognizable criteria of the regulatory program.**

Suitability for Different Medical Wastes and Associated Risks

Some wastes are not suitable for autoclaving. "Suitability," however, is determined by both technical and nontechnical factors. For example, particular pathological wastes are sometimes considered unsuitable for autoclaving (principally for *aesthetic* reasons, i.e., they will not be rendered nonrecognizable).[9] In any case, approximately 90 percent of the regulated medical wastes generated are suitable for autoclaving (104). Autoclaving is considered particularly appropriate for microbiological wastes (e.g., laboratory cultures). In contrast, autoclaves are not suitable for cytotoxic and other toxic chemical wastes because of the *hazardous nature* of these wastes. In addition, contaminated animal bedding is not autoclaved.

To the extent that autoclaving is used for only a portion of medical wastes, then it can be used as a supplement, more than a substitute for incinerating medical wastes. Yet, if wastes are segregated for treatment based on their chemical and physical characteristics, it is likely that a smaller fraction of waste will *require* incineration. Additional segregation of the items requiring incineration (or other treatment) is not usually necessary since these wastes are generated and/or managed separately.[10]

Documented health impacts from autoclaving do not exist. It is of critical importance that certain wastes, due to their either hazardous or pathological nature, not be autoclaved. For example, autoclaving hazardous materials such as antineoplastic agents, radioisotopes, solvents, or other toxic wastes could lead to chemicals being volatilized by the steam and could result in possible worker exposure between process cycles. If autoclaves are of a gravity-displacement type, steam "escapes" through an outlet vent, most of which is condensed and drained into the sanitary sewer.[11]

Potentially, if the waste itself contains trace elements of formalin or other carcinogenic compounds, workers could be exposed to the aerosolized compounds if they come in contact with the venting steam (104). Once again, the importance of separating waste materials for diversion to the most appropriate treatment method is evident (e.g., in this case, hazardous materials to a hazardous waste treatment option). Further study of emissions from autoclaves is warranted based on the fact that infectious wastes may contain significant levels of cytotoxic compounds or low level radioactive wastes and concerns that the presence of such substances could lead to emission problems.

A noticeable odor in the steam discharge, described by one knowledgeable observer as "much like styrofoam cups tossed in a campfire," is not known to be harmful (104). Odor-controlling tablets that can be added to each autoclave load are available.[12] The potential for problems with landfill leachate associated with autoclaved waste is not known, but in general the survival of viruses in solid waste leachate does not seem to occur.[13]

Costs and Volume Reduction Issues

Autoclave units are generally not as costly as on-site or off-site incineration alternatives. An autoclave unit will cost between $30,000 and $100,000 installed (depending on the size of the unit), with annual operating costs at about $0.05 to 0.07 per pound plus labor, with an expected equip-

[9]The phrase "pathological wastes" throughout this report refers to wastes of human origin (e.g., tissues, organs, body parts). Pathogens and pathogenetic wastes should be distinguished from pathological wastes (of human origin). Pathogens and pathogenetic wastes are components of the microbiological waste type (see ch. 1).

[10]For example, in most hospitals all tissue samples are transferred to pathology for analysis before disposal and can be collected separately there for incineration.

[11]These discharges to the sanitary sewer system should be innocuous in their impact although an industrial waste water discharge permit may be required by the local sewage district authority (see ch. 5).

[12]OTA did not determine whether these tablets mask the odor or actually change the chemistry, or whether their effect makes a difference from a human health perspective.

[13]See literature review and discussion by Turnberg (110), from which the author concludes that research has not established a relationship between landfill leachate and solid waste and disease, and that obtaining evidence of such a relationship is difficult and further research is necessary. Also see refs. 138, 103, 44.

ment lifetime of 10 to 15 years. Landfill costs must also be taken into account, but overall this treatment option appears less expensive than incineration and management of its ash residue (if it has to be sent to a hazardous waste landfill). The State of California concluded from its preliminary cost data that autoclaving and other non-incineration alternatives may be more economical for some small medical facilities than retrofitting existing incinerators to meet their newly proposed air emission control measure (108).

If autoclaved waste is not subsequently compacted or shredded, there is no significant volume reduction. Yet, given that medical waste represents such a small percentage of the solid waste stream, it does not pose a significant contribution to landfill capacity problems experienced in some areas of the country (and landfill waste cost is usually charged on a weight rather than a volume basis). For example, California reports that if all on-site incinerators are abandoned for alternative treatment methods, the medical waste requiring landfilling would only represent 0.03 percent of the waste currently handled at MSW landfills in the State (108).

AUTOCLAVING AND COMPACTION

High-vacuum steam sterilization combined with the compaction of treated waste began in California in 1978 and is increasingly being used in the Northeast and Mid-Atlantic areas of the country. As of May 1990, over 100 units are in operation. This treatment process combines an autoclave with a stationary compaction unit intended to handle the regulated medical waste as well as the solid waste from a health-care facility (see figure 4). The system is designed to be used as an on-site treatment alternative (104, 48, 30).[14]

The high-vacuum autoclave removes air, which acts as a steam displacement barrier, and thereby shortens the time for the steam to achieve the necessary operating temperature (approximately 284 °F) and permeate the entire waste load. This means that exposure to the waste is faster and the cycle time is reduced, which is estimated to be between 40 and 50 minutes from loading to loading (104).

The disinfected waste is then hydraulically fed into the solid waste hopper, where it is compacted with general refuse from the facility and automatically fed into the refuse bin or trailer for hauling to a solid waste facility. Operators are not exposed to the treated medical wastes, reducing the risk of exposure to sharps, fluids, or other waste items. As with most autoclaves, no separate fuel source is usually needed since live steam from existing boilers in the facility's physical plant can usually power the system (104). The compaction process achieves a 60 percent reduction of volume of the waste, and higher levels of up to 80 can be achieved if corrugated cardboard and other recyclable materials are separated from the waste to be compacted and landfilled.

The system is increasingly being adopted on the east coast, even in States covered by MWTA (where the autoclaved/compacted waste must be tracked). In New York State, however, the two restrictions associated with compacted, autoclaved waste have limited the application and acceptance of this alternative. First, the New York State Department of Health is requiring that the sharps treated in autoclave/compaction units, such as the San-i-pak units, must be in compaction-resistant containers to prevent spillage and/or exposure to sharps when the compacted waste is placed in the landfill. Second, the "recognizability" of the compacted waste has resulted in refusal by many local landfills to accept the waste (94). As noted above, however, in other areas of the country such refusals appear less difficult to overcome with explanation and demonstration of the process to landfill operators.

The capital costs are approximately $115,000 to $130,000 for equipment suitable for a 400 bed hospital, with estimates of $35,000 to $60,000 for site preparation (including utilities, slab, drainage, etc.) (48, 94). Operating costs, according to the sole manufacturer, San-i-pak, range from $0.03 per pound when the solid waste disposal costs are $300 per pull (haul) to $0.10 per pound when pull costs run as high as $1,600. Fuel costs are stated to be $0.003 per pound of steam used (47). The operating cost estimate includes this steam and electricity cost, as well as repairs and maintenance, the capitalized cost of the equipment, labor, and bags (48). The systems have an expected lifetime of 15 years (similar to that of most incinerators). The operating

[14]Four sizes of the autoclave and compaction unit are available which will accommodate 1, 3, 7, or 16 autoclave bags, measuring approximately 38x44 inches each, in a given cycle. Some limited attempts have been made for a commercial off-site use of the technology; such use, however, does not appear as practical as the on-site application for which the unit was designed (104).

Figure 4—Autoclave and Compaction Unit

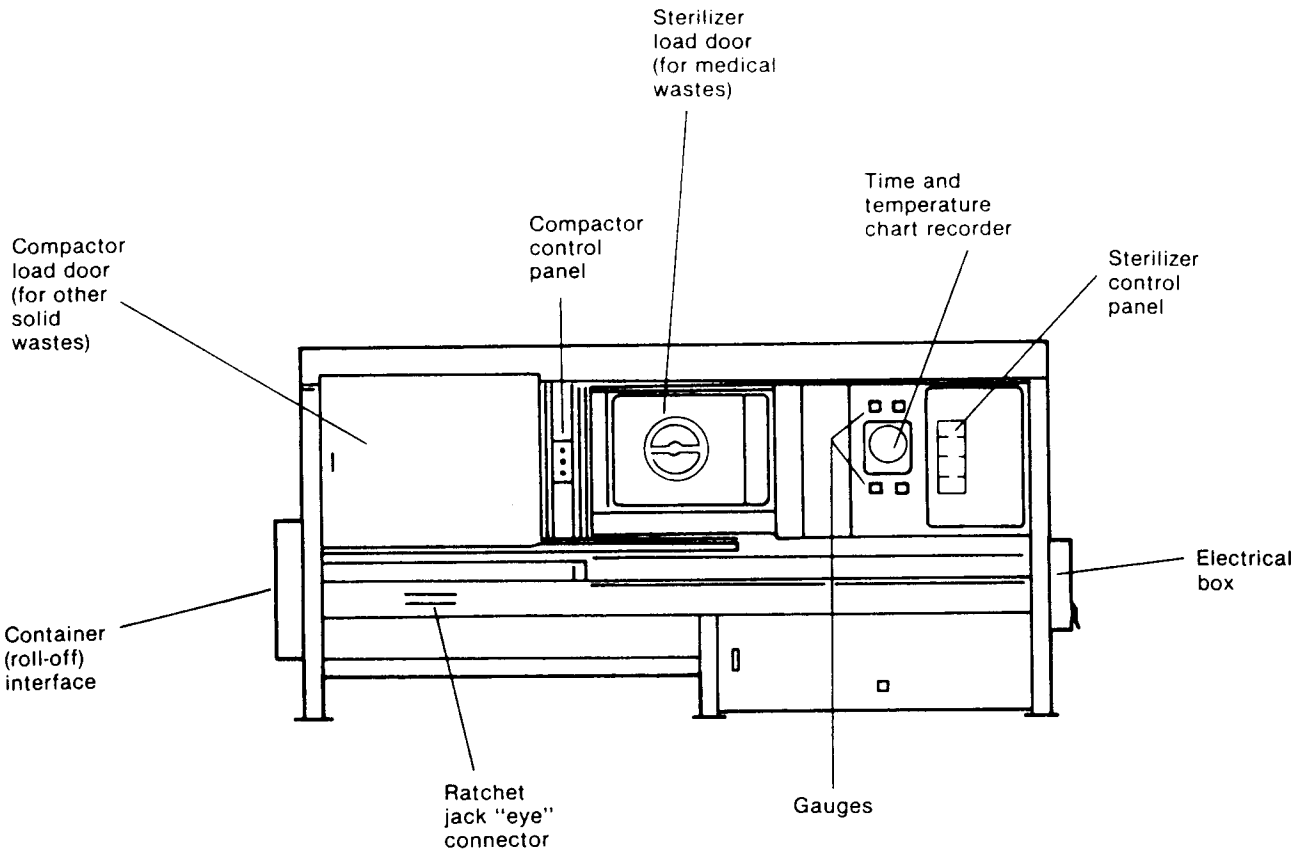

SOURCE: San-i-pak Pacific, Inc., Tracy, CA.

cost includes hauling costs for infectious and general wastes, and specially hauled wastes, i.e., chemotherapeutic, radioactive, and pathological wastes (estimated to be less than 1 percent of a facility's total waste).

MECHANICAL/CHEMICAL DISINFECTION

Chemical agents such as chlorine have been used as disinfectants for medical *products* for some time, although the application to large volumes of infectious *wastes* generated by hospitals and laboratories is more recent (104). This type of technology, which has been available since the mid-1980s, is referred to as "mechanical/chemical" because of mechanical maceration and chemical disinfection (a result of forcing a reaction that occurs to volatilize waste material and expose all of the pathogens to a chemical disinfectant in a controlled environment); the residue is discharged to the sewer system.[15]

Chemical disinfection processes, according to EPA, are most appropriate for liquid wastes, although they can be used to treat solid wastes (122). The appropriateness of the process for pathological wastes is not clear (92). A number of factors should be considered regarding the effective use of chemical disinfection, including: the types and biology of microorganisms in the wastes; degree of contamination; type of disinfectant used (usually sodium hypochlorite, commonly known as chlorine bleach) and its concentration and quantity; the contact time; mixing requirements; etc. (122). As with other treatment alternatives, efficacy of the method needs to be demonstrated through the development of a biological testing program and monitoring on a periodic basis using appropriate indicators in order for the system to be adopted and used on a routine

[15]This type of system is also sometimes referred to as "hydropulping" (see 30).

basis. Test results reported to date find the process, using chlorine bleach, to be an effective disinfectant for medical wastes contaminated with vegetable bacteria and viruses, but less effective against spore-forming bacteria (92).[16] No standard protocol has been developed to evaluate the efficacy of the system and to assist in developing standard operating procedures for it (92).

Maceration of the medical waste, involving high-speed hammermill blades and/or shredders, requires use of copious amounts of water. To keep the unit from overheating as well as to disinfect the waste, water is introduced along with the disinfectant (usually chlorine-based) during the maceration phase. The simultaneous volatilization and introduction of the disinfectant is designed to render the wastes noninfectious. The introduction of water creates a liquid waste, which is discharged to the sewer.[17] This means an industrial waste water discharge permit from the local sewage district may be required.

According to Research Triangle Institute's (RTI) contractor report to EPA, "Once the proper operating parameters such as the flow rates for water and chlorine solutions are established the device is simple to operate and requires little training" (92). The nonrecognizable nature of the byproduct of the mechanical/chemical treatment process and its ability to treat liquid medical waste before discharging it to the sewer system are important factors accounting for the favorable market response to this treatment alternative. The waste treated by the process is rendered nonrecognizable by the shredding and pulverizing phases, which are primarily for treatment efficiency but act to destroy the waste as well (104).[18] This means that the waste meets the nonrecognizability criteria of MWTA and would not have to be tracked under its manifest system.

Increased concern over the practice of discharging *untreated* liquids (e.g., blood and other body fluids) into the sewer system also makes the mechanical/chemical process with its discharge of *treated* liquids an attractive alternative. Yet, it is not clear that this system would reduce any risks that might exist as a result of *direct* discharges in a facility of blood and body fluids into the sewer system (see ch. 5). Further, the sewage system contains countless human pathogens from the vast quantity of human body waste. Liquid medical waste comprises only a minor fraction of this overall waste flow. Microbiologically, there is little difference between blood waste and fecal/urine waste (except that fecal wastes would be expected to have a far greater number of human pathogens) (111).

The process is designed for on-site use with possible applications to a variety of medical and health-care settings (see figure 5). The first company to manufacture such a system (Medical SafeTec., Inc.) currently offers three machines, one for larger applications and the other two for laboratory settings. A similar system was designed by a company for application in the funeral industry. This company also has a clinical machine for sharps and plans to offer over 200 separate machines for a wide variety of health-care applications. While the one company is offering a system that would require a large facility to purchase one unit, the other company is marketing smaller machines for use throughout the hospital (104).

States such as California and New Jersey, which are open to innovative technology for medical waste generally, are a responsive market for this alternative. Some large generators converted to this system, rather than replacing or retrofitting existing incinerators (104). Currently, about 40 of the smaller units are in use, primarily for sharps management. These systems can treat pathological waste (e.g., formalin-fixed tissue samples) and most other medical wastes.[19] The system is powered electrically with standard electrical requirements. Sewer connection is mandatory, and, as noted, a local discharge permit may be necessary. Concern has been raised over the level of metals, organics, and other contaminants that may be in the sewage discharge (5).

[16]Hazard and occupational risk from the handling, storage, and use of chlorine have been suggested as a potential disadvantage of this technology (94).

[17]Reportedly, systems that shred and disinfect medical wastes that will not require use of copious amounts of water or a sewer discharge are being developed (63). One such process will combine conventional shredding technology with the use of special red bags. These red bags have a small seam that envelops a few grams of formulated powder (a water-activated disinfectant). Treated material is "only slightly moist, no longer recognizable. . .disinfected and volume-reduced" (78).

[18]A preshredding system, which is part of the large hammermill, breaks up the waste materials before the hammermill pulverizes them.

[19]The EPA states, however, that these units are not normally recommended for pathological waste types (141).

Figure 5—Mechanical/Chemical Disinfection Unit

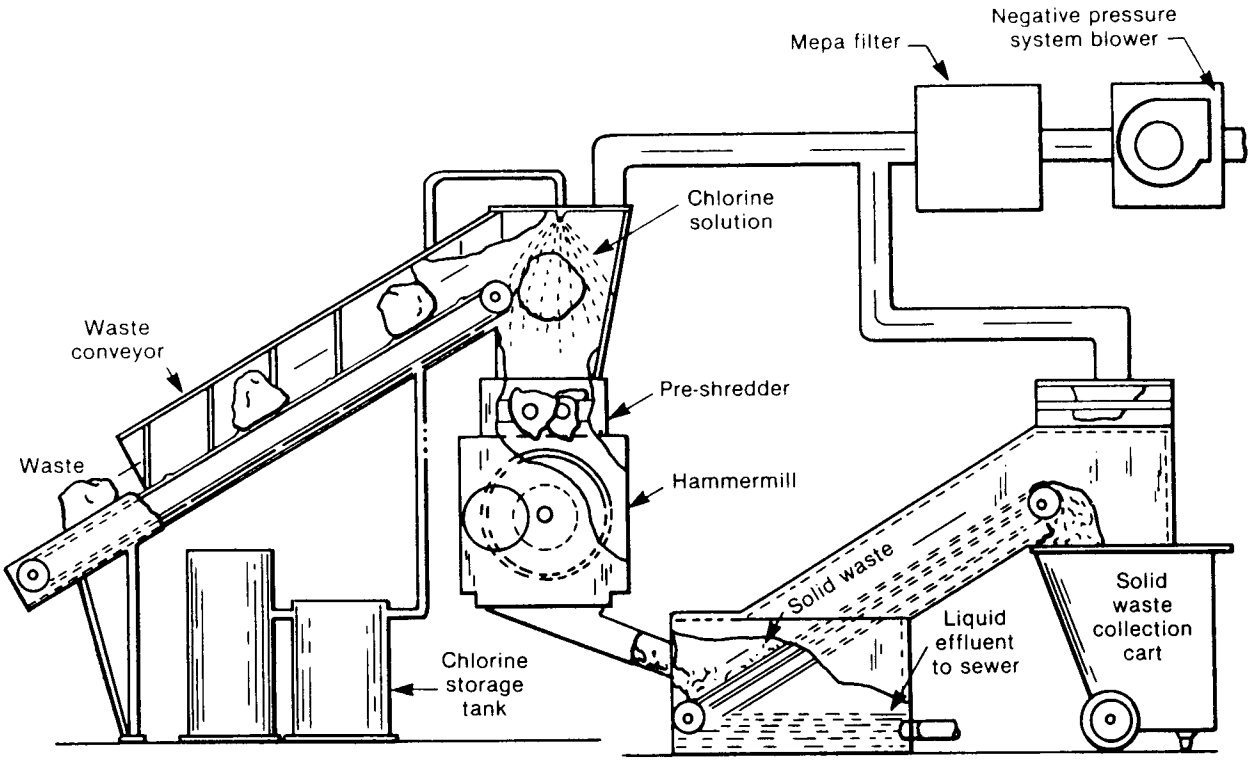

SOURCE: Medical SafeTec, Inc., Indianapolis, IN.

The percentage of dissolved solids in the discharge into the sewer is high (up to 10,000 ppm v. 300 ppm for residential users), but the manufacturer states that changes necessary to reduce the level to that of other points of discharges are now feasible (104). Even so, the liquid effluent contains high concentrations of substances, e.g., chlorine, that may require pretreatment before being discharged to the municipal sewer system. It would appear that local permit levels for sewage discharges would have to be met.[20]

There are no air quality regulations that are relevant. Although it is not clear there is a need for any air regulations, given that no known air emissions problems have been encountered, little has been reported about the nature of the emissions. There is some concern over the potential for producing volatile chemicals and/or microbes during the shredding process, although the system is designed to control emissions and force air through a series of prefilters and a chlorine-resistant filter before discharging it to the atmosphere (141, 5). The use of chlorine and the potential impact on sewage discharges is also raised as a concern with the chemical disinfection process. Further study of these issues is needed, possibly as part of EPA's current research on alternative treatment methods.

The mechanical nature of the equipment, with so many moving parts, means it could require a high level of maintenance. This also means there is more potential occupational exposure. The manufacturers note that no injuries involving equipment repair or maintenance have been reported.[21] As with an autoclave unit, the space needed for a mechanical/chemical unit is not large and the capacity is then mainly a factor of the throughput rate for the unit. The smaller units require an area approximately 10

[20]RTI (92) reports that waste treatment effluent from the Medical SafeTec unit has been tested according to the specifications published under the Clean Water Act for pollutant analysis (40 CFR, Part 136).

[21]Yet, as with other treatment alternatives, it is not clear how frequently accidents are reported (given concerns over potential impacts on insurance premiums, etc.).

feet by 9 feet and the units with additional capacity would require areas of 11 feet by 10 feet.

Capital costs are approximately between $40,000 and $50,000 (equipment and installation) for the smaller units and approximately $350,000 for the larger sized unit. Operating costs are reported to be $0.06 per pound of waste per hour of treatment (104).

MICROWAVE

The application of microwave technology to disinfect medical waste was introduced in Europe several years ago. The technology is from West Germany and just recently is being marketed in the United States (34). The units can be on-site or mobile facilities. The first on-site installation was in North Carolina in March 1990. A second commercial system began operation shortly after this in California as a supplemental technology to an existing regional incinerator (104, 34).

Powered by electricity, the unit shreds the waste in a controlled environment; the waste then enters the chamber for exposure to the microwaves (see figure 6). The disinfection process takes place through microwave heating, which occurs inside the waste material (unlike other thermal treatment methods which heat wastes externally) and wetting and shredding the waste to facilitate heating and steam penetration of the waste. The material is discharged to a storage bin for ultimate disposal.

Computerized controls, as with most other treatment technologies, are used to ensure the minimum parameters for disinfection and proper function of the equipment. Fire and temperature conditions necessary for waste sterilization are the same as those for autoclaving (92). Studies conducted in Germany by the Institute of Hygiene, University of Gottingen concluded that the process treated material to a lower level of bacteria content than ordinary household wastes (as reported by ref. 35). Performance tests at a unit operating in the United States, using a *Bacillus subtilis* microbiological spore test indicator, found the wastes to be treated under conditions to render it sterilized (35). Research Triangle Institute reports that although the method is essentially a steam sterilization method, it is necessary to confirm that conditions required for steam sterilization exist in the microwave process (92).

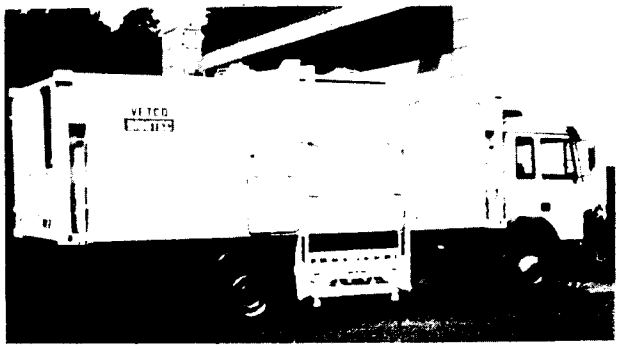

Photo credit: Vetco Sanitec Corp., Combustion Engineering, Stamford, CT

Microwave units can be installed on-site or be used as mobile units. Mobile units could facilitate collection of regulated medical wastes from home health-care settings, doctor offices, and other small generators of medical wastes. This type of mobile microwave unit has been used in Berlin, West Germany for several years.

As with autoclaving, approximately 90 percent of medical wastes can be treated by this method (it is not recommended for pathological wastes). The use of electricity averages about $0.02 per pound. Energy use is reportedly lower than that of an incinerator (35). The shredding process results in a volume reduction of 80 percent prior to disposal. Treated wastes are suitable for disposal in a solid waste landfill. Given that the process is used in Europe with no reported emission problems, its acceptance is anticipated in the United States (35, 104).

The microwave system is designed to be operated by unskilled labor. All adjustments in wastes levels and time are preprogrammed into the system (92). Operating and maintenance costs are reported to be approximately $0.10 or $0.07 per hour, depending on whether the system is operated 8 hours or 10 hours a day, respectively. Capital costs are about $500,000 for a unit (35). It appears that health risks associated with the unit would primarily be associated with the maintenance of the shredder component of the system. Potential operator exposure to volatized chemicals during loading or cleaning/maintenance should be examined, however.

IRRADIATION

A common practice is to treat medical *products* with radiation for sterilization purposes (104). The high cost of cobalt used in the process and high operating costs have discouraged commercial ventures from using the technology for medical waste management. In February 1990, however, the first

Figure 6—Mobile Microwave Medical Waste Disinfection Unit

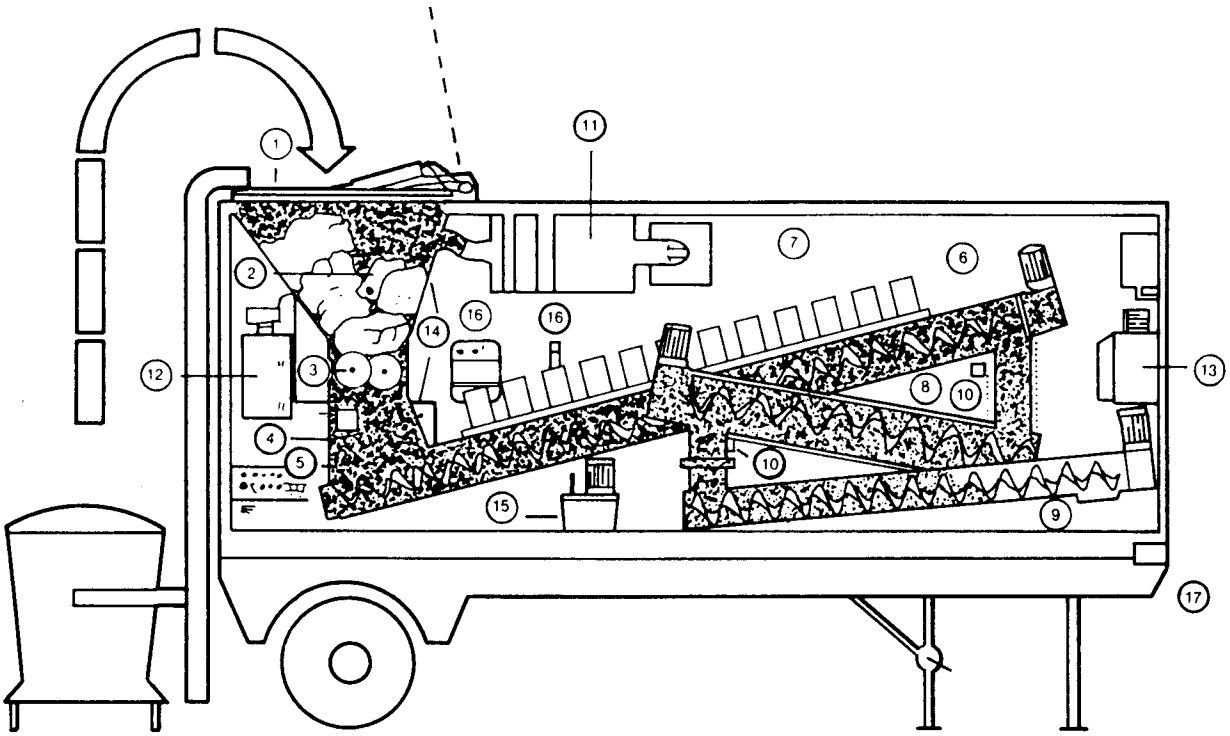

Process scheme of a mobile microwave-disinfection unit

1. Feeding hopper
2. Feeding crank
3. Shredder
4. Connecting hopper with inspection window
5. Level sensors
6. Main conveyor auger
7. Microwave generators
8. Temperature holding section
9. Discharge conveyor auger
10. Temperature sensors
11. Filter system, 2-stage
12. Water tank with pump and spraying connection
13. Steam generator
14. Steam connection
15. Hydraulic aggregate
16. Room heater
17. Container

SOURCE: Vetco Sanitec Corp., Combustion Engineering, Stamford, CT.

commercial medical *waste* irradiation facility was opened in Arkansas, and additional facilities are planned in California and New Jersey. Questions have been raised about the actual process of radiating the material and achieving adequate disinfection (104) (see figure 7). Gamma radiation sterilizes infectious waste by penetrating the waste and inactivating microbial contaminants. The ionizing radiation hydrolyzes the water molecules within the micro organisms and these intermediate hydrolysis products interact with the gamma radiation and biological compounds, are broken down and are rendered noninfectious. The company pursuing this treatment technology emphasizes that the waste will not be disposed of as solid waste. Rather, it is shredded, rendering it nonrecognizable, and is shipped to a cement kiln where it is burned as fuel (104).[22] Eventually, one such operator of a system

[22]It should be noted that concerns have also been raised about the practice of burning wastes in cement kilns, which typically are not subject to air emission standards (other than the new source performance standard (NSPS) for particulate matter emissions). The assumption is that these kilns operate at such high temperatures that wastes used as fuels are destroyed without producing harmful emissions. This is an unsettled regulatory issue. It is true, however, that any cement kiln burning MSW would be subject to air emissions standards for MSW incinerators as proposed by EPA in December 1989.

Figure 7—Irradiation Unit

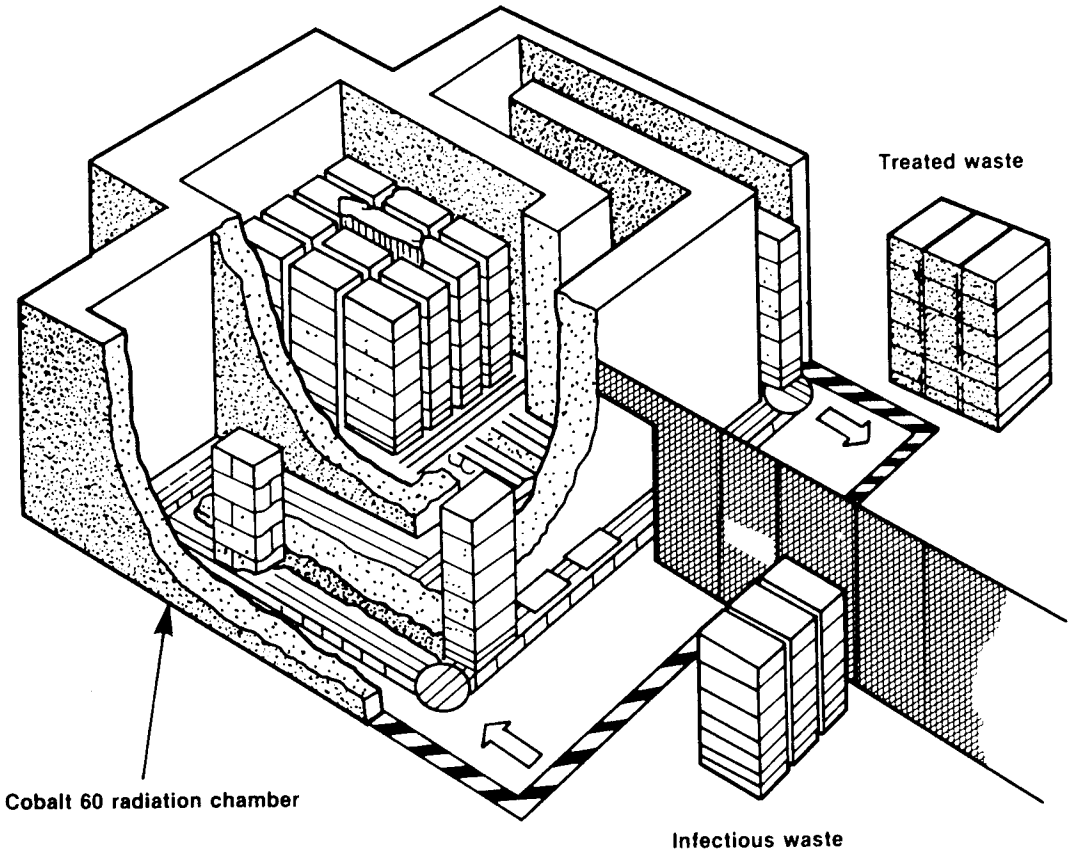

SOURCE: Technology Process, Inc.

plans to separate the plastic waste and sell the treated plastic residues for recycling (92, 101).

The process is highly predictable, according to RTI's analysis (92). Verification of the conditions for disinfection involves using *Bacillus pumilis* as a test indicator organism. According to RTI, no studies specifically addressing the efficacy of gamma irradiation of medical waste for disinfection (92). In addition, film is placed between every few boxes to quantify the amount of radiation each box receives (104).

Again, this treatment method is not recommended by EPA for pathological wastes. The capacity of these units is a factor of the throughput rate. The units are an off-site alternative and can manage all types of waste, except pathological wastes. The approximate operating cost could be $0.15 per pound. Potential risks of this alternative treatment technology are primarily associated with the possibility of radiation exposure to workers.[23]

OTHER POTENTIAL TREATMENT TECHNOLOGIES

Other technologies with potential application to medical waste management are in a conceptual or experimental stage in their development. Several are mentioned here to illustrate the variety of attempts to develop treatment alternatives for medical wastes.

One technology that has recently been announced as available and capable of thermally destroying biomedical wastes uses an electric molten glass furnace. At least with other waste types, the wastes are fed into the furnace and are subjected to intense heat (2,300 °F) and air and water vapor. The result

[23]Workers operating these systems would have to be trained according to the 10 CFR "Standards for Protection Against Radiation" regulations. Operators would need to be highly trained to ensure the efficient and safe operation of the process.

is the vaporization or oxidation of some wastes and a inert stable glass residue (87).

Electrohydraulic disinfection and pulse-power technology were created as disinfection systems for contaminated liquids. Their uses are not widespread, although the concept of applying the technology to medical waste disinfection has been suggested. It appears that the perceived high cost of this technology is a major reason it has not yet been developed. The process involves the use of pulsed plasma of electrical discharges in water, using ultraviolet radiation, hydrogen, hydroxil, ozone and shock waves to act as disinfectants. One application of pulse power technology does not require the use of radioisotopes (104).

Future application of plasma torch technology to medical wastes (and other hazardous wastes) has been suggested (42, 39, 31). A "pyroxidize," a small pyrolysis on-site laboratory waste disposal unit, is being developed (92). Another recently announced potential treatment technology is an electrocatalytic oxidation system (38).

Adaptations of existing technologies have been suggested, for example, a sterilization/dry grinding method (30). This system would combine an autoclave system with dry grinding/shredding in a hammermill to achieve both volume reduction and nonrecognizability of the wastes. Projected costs for this hypothetical alternative treatment are $0.08 per pound (30). It is not clear whether the increased maintenance cost usually associated with shredders is taken into consideration in these calculations. One reason frequently given for the limited application to date of shredders is that they require a high level of maintenance. Thermal inactivation or dry heat sterilization, reportedly sometimes used for both solid and liquid medical wastes, also could possibly be used in conjunction with a shredder or compactor (although it is not considered as efficient as steam disinfection) (73).

SUMMARY

Several non-incineration alternative treatment technologies for medical wastes are commercially available, others are at a conceptual or developmental stage. Autoclaves, autoclave/compaction units, mechanical/chemical units, and most recently microwaving and irradiation treatment alternatives are in use in medical facilities across the Nation. Most of these units are on-site treatment alternatives and most appear less costly than incineration. Many of the alternatives will achieve significant volume reduction (of 60 percent or more) of the medical waste and all can render wastes nonrecognizable (if a compactor or shredder is added). Weight reduction may or may not occur, particularly if water is added during the treatment process. In fact, some of these treatment alternatives can *add* to the weight of waste, given their use of water. These alternatives appear to have fewer emissions concerns (although these warrant further study) than incinerators. Most of these alternatives do not appear appropriate for pathological wastes.

Health risks associated with these technologies have not been thoroughly investigated. Further examination of potential health risks is warranted (particularly for the newest applications, e.g., microwave and irradiation). **When any waste treatment alternative is considered, any new or additional employee exposures that could result from utilizing the new method should be identified and evaluated.**

Before adopting a medical waste management strategy, medical waste generators must first know the applicable regulatory requirements and then assess the capabilities, costs, and associated health and environmental risks of various treatment technologies as applied to their facility in order to adopt the most appropriate technology for their needs. It is likely that the emergence of these non-incineration alternative treatment methods will reduce but *not* eliminate the current level of dependence on incineration for medical wastes. Many of these alternatives can be viewed as supplementing the use of incineration for treating medical wastes. Pathological wastes are the one type of regulated medical wastes for which incineration remains the preferred treatment alternative (122, 92).

It appears most prudent for any regulatory program for medical waste to avoid directly or indirectly encouraging a particular type or application of treatment technologies. Rather, flexibility for the generators to meet their management needs and comply with regulatory requirements will allow for adoption of the most appropriate treatment options and help ensure safe management of medical wastes.

Government agencies, particularly EPA, could facilitate the evaluation and adoption of new treatment alternatives by developing a program for demonstrating the efficacy of a treatment

method. A general protocol for the certification of approval of any type of waste treatment technology (e.g., hazardous, solid, medical) could be established with adjustments made for developing appropriate testing programs (e.g., biological testing of medical treatment methods).

Interim approval status might be given while test protocols and results are developed and/or pilot projects, perhaps at veterans' hospitals or other government facilities could be used. Monitoring new facilities on a periodic basis, perhaps with some supporting funding, could facilitate developing appropriate operating parameters and specifications. A program similar to the Superfund Innovative Technology Evaluation Program has been suggested as a model for a program evaluating new medical waste technologies (31, 124).

Such efforts could help ensure that government regulatory activity does not create barriers for evaluation and adoption of new technologies. An important task for State and Federal regulators then is to rid the current regulatory system of inconsistencies and ambiguities and enable the "market" to move ahead with optimum management solutions.