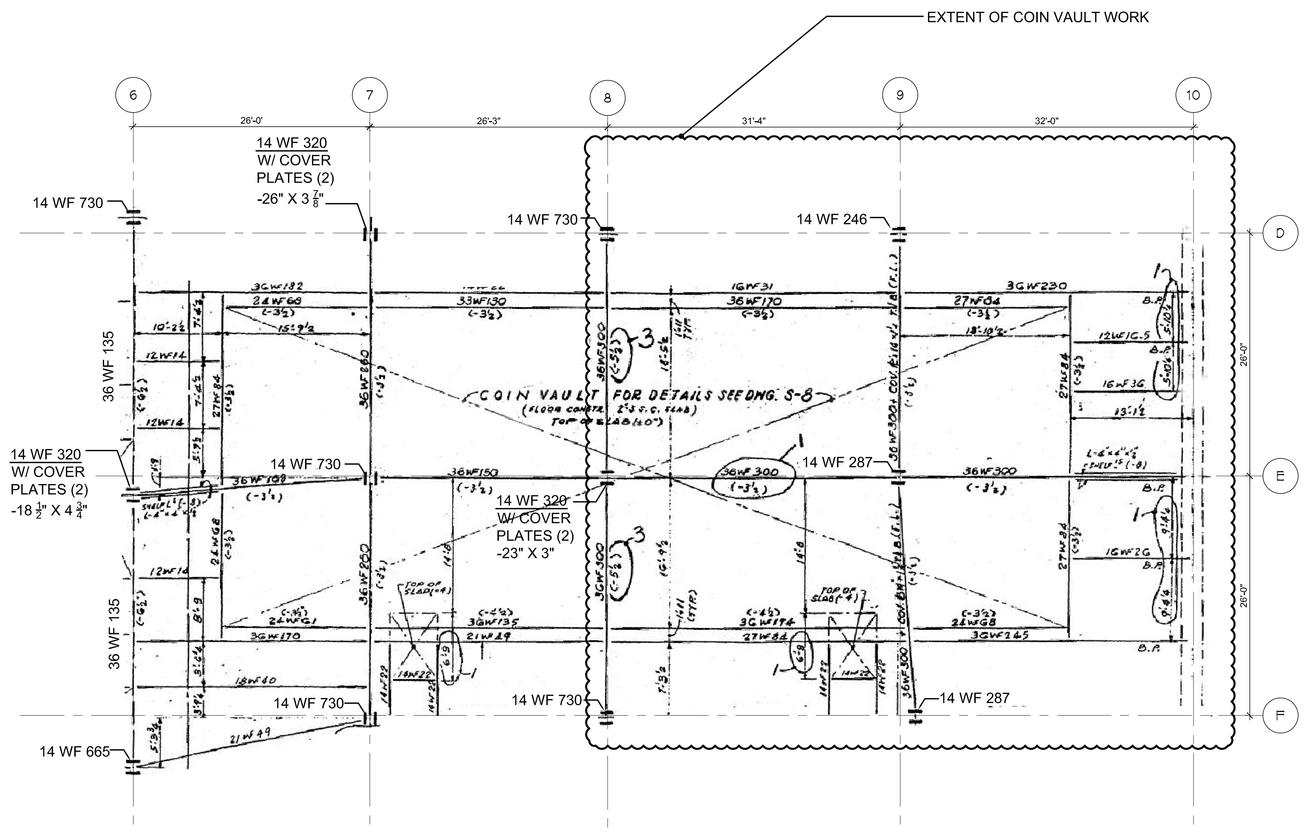

1 D-102 CELLAR A PLAN- EXISTING CONDITIONS
SCALE: N.T.S.

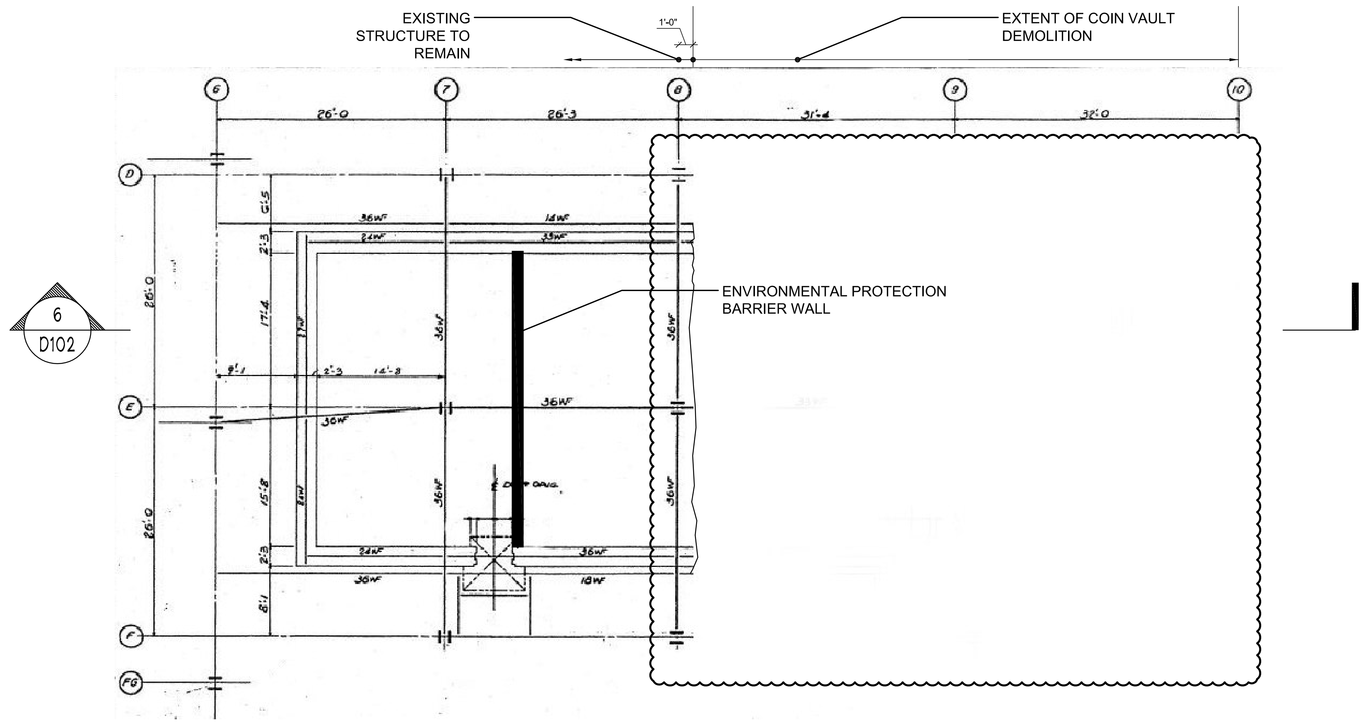

2 D-102 CELLAR A PLAN- PROPOSED CONDITIONS
SCALE: N.T.S.

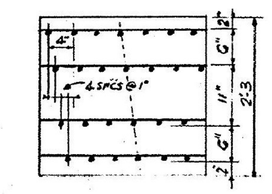

TYPICAL DETAIL OF REINFORCEMENT
(FOR ALL WALLS, SLAB & ROOF)
ALL REINF. #3@4" (UNLESS OTHERWISE NOTED.)

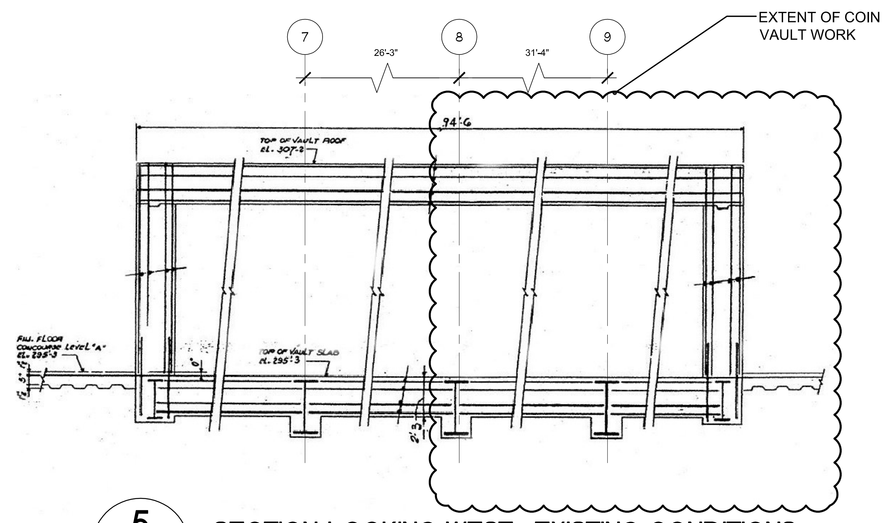

5 D-102 SECTION LOOKING WEST- EXISTING CONDITIONS
SCALE: N.T.S.

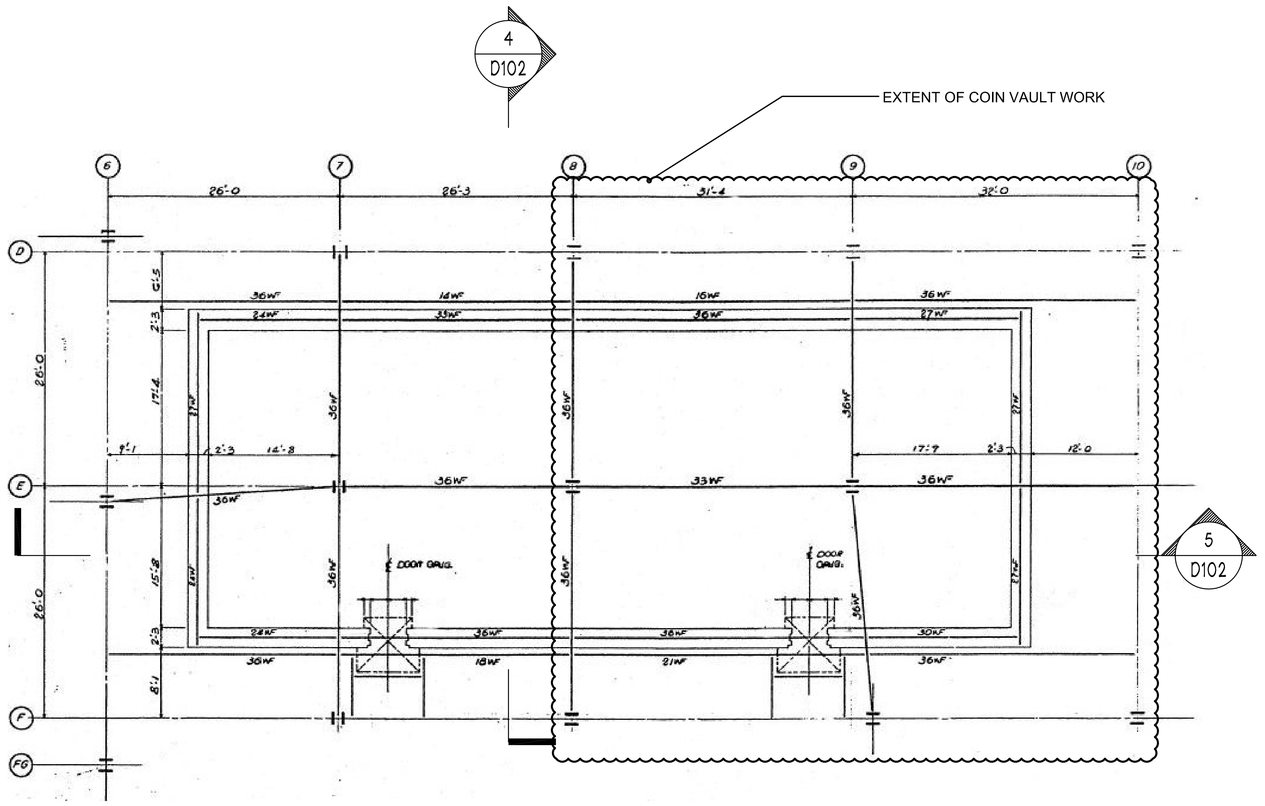

3 D-102 CELLAR A PLAN- EXISTING CONDITIONS
SCALE: N.T.S.

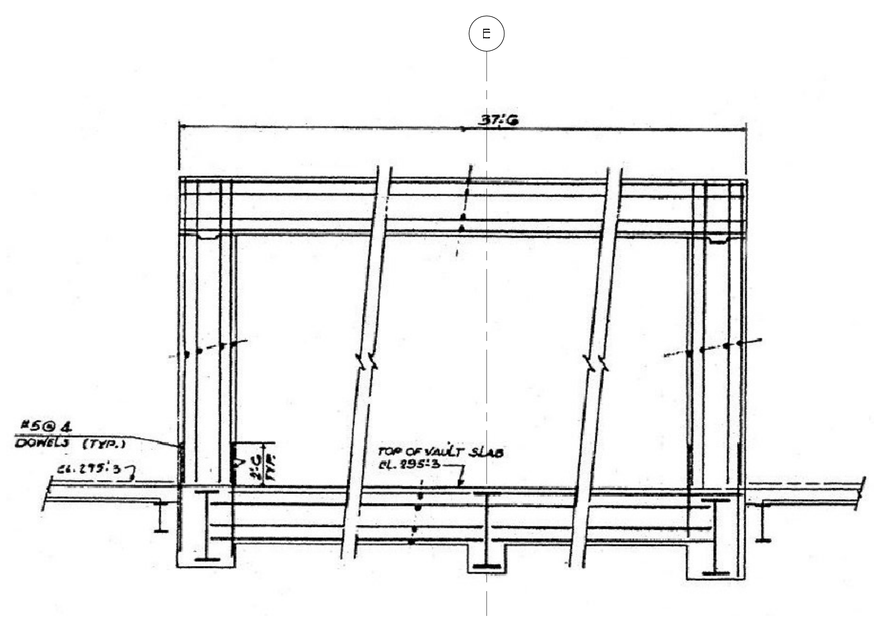

4 D-102 SECTION LOOKING NORTH- EXISTING CONDITIONS
SCALE: N.T.S.

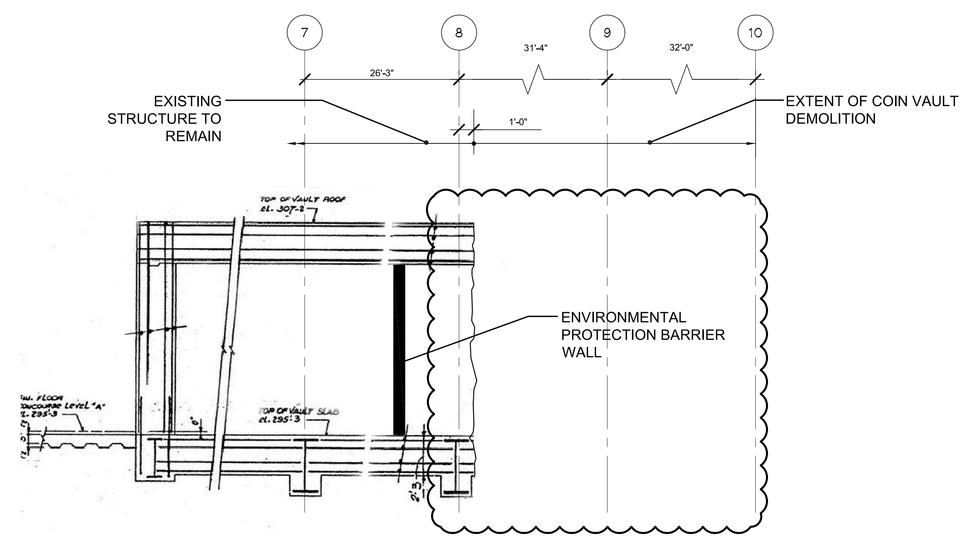

6 D-102 SECTION LOOKING WEST- PROPOSED CONDITIONS
SCALE: N.T.S.

PROGRESS SET
PENDING DOB APPROVAL

© COPYRIGHT - LZA ASSOCIATES 2003

CLIENT/ OWNER: LMDC Lower Manhattan Development Corporation; Bovis Lend Lease

PROJECT: DECONSTRUCTION OF 130 LIBERTY STREET
130 LIBERTY ST., NEW YORK, NY 10006

ISSUES/REVISIONS NO. | DESCRIPTION | DATES

KEY PLAN: NORTH

SEAL:

ARCHITECT/ ENGINEER: Thornton-Tomasetti Group
51 MADISON AVENUE , NEW YORK, NY 10010
TEL: (917) 661-7800; FAX: (917) 661-7801

DRAWING TITLE: CELLAR A - COIN VAULT EXISTING & PROPOSED CONDITIONS

LZA JOB NO.: 2564/00

DATE: MAY 3, 2006
DRAWING SCALE: AS NOTED
DRAWING NO.: D-102
SHEET NO. OF