The EPA Administrator signed the following proposed rule on August 16, 2004. It is being submitted for publication in the *Federal Register*. While EPA has taken steps to ensure the accuracy of this Internet version of the rule, it is not the official version of the rule for purposes of public comment. Please refer to the official version in a forthcoming *Federal Register* publication and on GPO's Web Site. The rule will likely be published in the *Federal Register* by early September 2004. You can access the *Federal Register* at: http://www.access.gpo.gov/su_docs/aces/aces140.html. When using this site, note that "text" files may be incomplete because they don't include graphics. Instead, select "Adobe Portable Document File" (PDF) files.

ENVIRONMENTAL PROTECTION AGENCY
40 CFR Parts 85, 86, 89, 90, 91, 92, 94, 1039, 1048, 1051, 1065, and 1068
[AMS-FRL-xxxx-x]

RIN 2060-xxxx

Test Procedures for Testing Highway and Nonroad Engines and Omnibus Technical Amendments

AGENCY: Environmental Protection Agency (EPA).

ACTION: Notice of Proposed Rulemaking.

SUMMARY: This regulation aims to revise and harmonize test procedures from the various EPA programs for controlling engine emissions. It will not address emission standards, nor is it intended to change the emission reductions expected from these EPA programs. Rather, it proposes to amend 40 CFR part 1065, which contains laboratory specifications for equipment and test fuels, instructions for preparing engines and running tests, calculations for determining final emission levels from measured values, and instructions for running emission tests using portable measurement devices outside the laboratory. Part 1065 currently applies to land-based nonroad diesel engines, land-based nonroad spark-ignition engines over 19 kilowatts, and recreational vehicles. These proposed revisions will update part 1065 to deal more effectively with the more stringent standards recently promulgated by EPA and will also clarify and better define certain elements of the required test procedures. In particular, the proposed amendments will better specify the procedures applicable to field testing under part 1065.

This notice also proposes to apply part 1065 to highway heavy-duty diesel engine regulations. This action is appropriate because EPA has historically drafted a full set of testing specifications for each vehicle or engine category subject to emission standards as each program was developed over the past three decades. This patchwork approach has led to some variation in test parameters across programs, which we hope to address by adopting a common set of test requirements. The primary goal of this effort is to create unified testing requirements for all engines, which when implemented will streamline laboratory efforts for EPA and industry.

This action will also include other technical changes intended to clarify and better define requirements for

several different EPA engine programs. These changes are relatively minor and are technical in scope.

DATES: Comments: Send written comments on this proposed rule by October 29, 2004. See Section IV for more information about written comments.

Hearings: We will hold an informal public workshop in Ann Arbor on October 1, 2004. If anyone requests a public hearing , we will hold it on September 27, 2004. To request a public hearing, send a request to the contact in "FOR FURTHER INFORMATION CONTACT" by September 20, 2004. See Section III for more information about public workshops and hearings.

ADDRESSES: You may submit comments, identified by docket number OAR-2004-0017, by any of the following methods:
Federal Rulemaking Portal: http://www.regulations.gov. Follow the on-line instructions for submitting comments.
Agency Web Site: http://www.epa.gov/edocket. Follow the instructions for submitting comments. Note that this is not available until after this proposal is published in the *Federal Register*.
E-mail: testamendments@epa.gov. Specify docket number OAR-2004-0017 in the body of the message.
Fax: (202) 260-4400.
Mail or Hand Delivery: Environmental Protection Agency, Air Docket, Mailcode 6102T, 1200 Pennsylvania Ave., NW, Washington, DC, 20460.
Hand Delivery or Courier: EPA Docket Center, (EPA/DC) EPA West, Room B102, 1301 Constitution Ave., NW, Washington, DC., Attention Docket ID No. A-2001-28. Such deliveries are only accepted during the Docket's normal hours of operation from 8:30 a.m. to 4:30 p.m., Monday through Friday, excluding legal holidays.
Instructions: Include the agency name and docket number in all submissions for this rulemaking. All comments received will be posted without change to http://www.epa.gov/edocket, including any personal information provided. For detailed instructions on submitting comments and additional information on the rulemaking process, see the "Public Participation" heading of the SUPPLEMENTARY INFORMATION section of this document.
Docket: For access to the docket to read background documents or comments received, go to the Web site at the URL identified above or to the Air Docket at the address identified above.

FOR FURTHER INFORMATION CONTACT: Alan Stout, U.S. EPA, Voice-mail (734) 214-4636; E-mail: stout.alan@epa.gov

SUPPLEMENTARY INFORMATION:

A. Regulated Entities

This proposed action would affect companies that manufacture or sell engines. Regulated categories and entities include:

Category	NAICS Codes[a]	Examples of Potentially Regulated Entities
Industry	333618	Manufacturers of new engines

[a]North American Industry Classification System (NAICS)

This list is not intended to be exhaustive, but rather provides a guide regarding entities likely to be regulated by this action. To determine whether particular activities may be regulated by this action, you should carefully examine the proposed regulations. You may direct questions regarding the applicability of this action to the person listed in "FOR FURTHER INFORMATION CONTACT."

B. How Can I Get Copies Of This Document and Other Related Information ?

1. *Docket.* EPA has established an official public docket for this action under Docket ID No. OAR-2004-0017. The official public docket consists of the documents specifically referenced in this action, any public comments received, and other information related to this action. Although a part of the official docket, the public docket does not include Confidential Business Information (CBI) or other information whose disclosure is restricted by statute. Documents in the official public docket are listed in the index list in EPA's electronic public docket and comment system, EDOCKET. Documents may be available either electronically or in hard copy. Electronic documents may be viewed through EDOCKET. Hard copy documents may be viewed at the EPA Docket Center, (EPA/DC) EPA West, Room B102, 1301 Constitution Ave., NW, Washington, DC. Docket in The EPA Docket Center Public Reading Room is open from 8:30 a.m. to 4:30 p.m., Monday through Friday, excluding legal holidays. The telephone number for the Public Reading Room is (202) 566-1744.

This proposal relies in part on information related to our November 2002 final rule, which can be found in Public Docket A-2000-01. This docket is incorporated by reference into the docket for this action, OAR-2004-0017.

2. *Electronic Access.* You may access this Federal Register document electronically through the EPA Internet under the "Federal Register" listings at *http://www.epa.gov/fedrgstr/* Or you can go to the federal-wide eRulemaking site at www.regulations.gov.

An electronic version of the public docket is available through EDOCKET. You may use EDOCKET at http://www.epa.gov/edocket/ to submit or view public comments, access the index listing of the contents of the official public docket, and to access those documents in the public docket that are available electronically. Once in the system, select "search," then key in the appropriate docket identification number.

Certain types of information will not be placed in the EDOCKET. Information claimed as CBI and other information whose disclosure is restricted by statute, which is not included in the official public docket, will not be available for public viewing in EPA's electronic public docket. EPA's policy is that copyrighted material will not be placed in EPA's electronic public docket but will be available only in printed, paper form in the official public docket. To the extent feasible, publicly available docket materials will be made available in EPA's electronic public docket. When a document is selected from the index list in EDOCKET, the system will identify whether the document is available for viewing in EPA's electronic public docket. Publicly available docket materials that are not available electronically may be viewed at the docket facility identified in Unit I.B. EPA intends to work towards providing electronic access to all of the publicly available docket materials through EPA's electronic public docket.

For public commenters, it is important to note that EPA's policy is that public comments, whether submitted electronically or in paper, will be made available for public viewing in EPA's electronic public docket as EPA receives them and without change, unless the comment contains copyrighted material, CBI, or other information whose disclosure is restricted by statute. When EPA identifies a comment containing copyrighted material, EPA will provide a reference to that material in the version of the comment that is placed in EPA's electronic public docket. The entire printed comment, including the copyrighted material, will be available in the public docket.

Public comments submitted on computer disks that are mailed or delivered to the docket will be transferred to EPA's electronic public docket. Public comments that are mailed or delivered to the Docket will be scanned and placed in EPA's electronic public docket. Where practical, physical objects will be photographed, and the photograph will be placed in EPA's electronic public docket along with a brief description written by the docket staff.

C. *How and To Whom Do I Submit Comments?*

We are opening a formal comment period by publishing this document. We will accept comments for the period indicated under "DATES" above. If you have an interest in the program described in this document, we encourage you to comment on any aspect of this rulemaking.

Your comments will be most useful if you include appropriate and detailed supporting rationale, data, and analysis. If you disagree with parts of the proposal, we encourage you to suggest and analyze alternate approaches to meeting the air quality goals described in this proposal. You should send all comments, except those containing proprietary information, to our Air Docket (see "Addresses") before the end of the comment period.

You may submit comments electronically, by mail, or through hand delivery/courier. To ensure proper receipt by EPA, identify the appropriate docket identification number in the body of your comment. Submit your comments within the specified comment period. Comments received after the close of the comment period will be marked "late." EPA is not required to consider these late comments. If you wish to submit CBI or information that is otherwise protected by statute, please follow the instructions in Section IX.D. Do not use EPA Dockets or e-mail to submit CBI or information protected by statute.

1. Electronically

If you submit an electronic comment as prescribed below, we recommend that you include your name, mailing address, and an e-mail address or other contact information in the body of your comment. Also include this contact information on the outside of any disk or CD ROM you submit, and in any cover letter accompanying the disk or CD ROM. This ensures that you can be identified as the submitter of the comment and allows us to contact you if we cannot read your comment or if we need further information on the substance of your comment. Our policy is that we will not edit your comment; any identifying or contact information provided in the body of a comment will be included as part of the comment that is placed in the official public docket and made available in EPA's electronic public docket. If we cannot read your comment due to technical difficulties and cannot contact you for clarification, we may not be able to consider your comment.

i. EPA Dockets

To submit comments on EPA's electronic public docket, go directly to EPA Dockets at

http://www.epa.gov/edocket and follow the online instructions for submitting comments. To access EPA's electronic public docket from the EPA Internet Home Page, select "Information Sources," "Dockets," and "EPA Dockets." Once in the system, select "Quick Search," and then key in Docket ID No. OAR-2004-0017. The system is an "anonymous access" system, which means we will not know your identity, e-mail address, or other contact information unless you provide it in the body of your comment.

ii. E-mail

Comments may be sent by electronic mail to testamendments@epa.gov. In contrast to EPA's electronic public docket, EPA's e-mail system is not an "anonymous access" system. If you send a comment via electronic mail directly to the Docket without going through EPA's electronic public docket, the e-mail system automatically captures your e-mail address. E-mail addresses that are automatically captured are included and made available as part of the comment that is placed in the official public docket.

iii. Disk or CD ROM

You may submit comments on a disk or CD ROM that you send to the mailing address identified in Section IX.A.2 below. Avoid the use of special software, characters, and any form of encryption.

2. By Mail

Send your comments to: Air Docket, Environmental Protection Agency, Mailcode: 6102T, 1200 Pennsylvania Ave., NW, Washington, DC, 20460.

3. By Hand Delivery or Courier

Deliver your comments to: EPA Docket Center, (EPA/DC) EPA West, Room B102, 1301 Constitution Ave., NW, Washington, DC., Attention Docket ID No. A-2001-28. Such deliveries are only accepted during the Docket's normal hours of operation from 8:30 a.m. to 4:30 p.m., Monday through Friday, excluding legal holidays.

D. How Should I Submit CBI to the Agency?

Do not submit information that you consider to be CBI electronically through EPA's electronic public docket or by e-mail. Send or deliver information identified as CBI only to the following address: U.S. Environmental Protection Agency, Assessment and Standards Division, 2000 Traverwood Drive, Ann Arbor, MI, 48105, Attention Docket No. OAR-2004-0017. You may claim information that you submit to EPA as CBI by marking any part or all of that information as CBI (if you submit CBI on disk or CD ROM, mark the outside of the disk or CD ROM as CBI and then identify electronically within the disk or CD ROM the specific information that is CBI). Information so marked will not be disclosed except in accordance with procedures set forth in 40 CFR part 2.

In addition to one complete version of the comment that includes any information claimed as CBI, a copy of the comment that does not contain the information claimed as CBI must be submitted for inclusion in the public docket and EPA's electronic public docket. If you submit the copy that does not contain CBI on disk or CD ROM, mark the outside of the disk or CD ROM clearly that it does not contain CBI. Information not marked as CBI will be included in the public docket and EPA's electronic public docket without prior notice. If you have any questions about CBI or the procedures for claiming CBI, please consult the person identified in the FOR FURTHER INFORMATION CONTACT section.

Table of Contents

I. Modified Test Procedures for Highway and Nonroad Engines
A. Incorporation of Nonroad Test Procedures for Heavy Duty Highway Engines
B. Revisions to Part 1065

II. Technical Amendments
A. Definitions and Penalties
B. Nonroad general compliance provisions (40 CFR part 1068)
C. Land-based nonroad diesel engines (40 CFR parts 89 and 1039)
D. Marine diesel engines (40 CFR part 94)
E. Small nonroad spark-ignition engines (40 CFR part 90)
F. Marine spark-ignition engines (40 CFR part 91)
G. Large nonroad spark-ignition engines (40 CFR part 1048)
H. Recreational vehicles (40 CFR part 1051)
I. Locomotives (40 CFR part 92)
J. Highway engines and vehicles (40 CFR part 86)

III. Public Participation

IV. Statutory and Executive Order Reviews

V. Statutory Provisions and Legal Authority

I. Modified Test Procedures for Highway and Nonroad Engines

A. Incorporation of Nonroad Test Procedures for Heavy Duty Highway Engines

As part of our initiative to update the content, organization and writing style of our regulations, we are proposing revisions to our test procedures.[1] We have grouped all of our engine dynamometer and field testing test procedures into one part entitled, "Part 1065: Test Procedures." For each engine or vehicle sector for which we have recently promulgated standards (such as land-based nonroad diesel engines or recreational vehicles), we identified an individual part as the standard-setting part for that sector. These standard-setting parts then refer to one common set of test procedures in part 1065. We intend in this rule to continue this process of having all our engine programs refer to a common set of procedures by applying part 1065 to all heavy-duty highway engines.

In the past, each engine or vehicle sector had its own set of testing procedures. There are many similarities in test procedures across the various sectors. However, as we introduced new regulations for individual sectors, the more recent regulations featured test procedure updates and improvements that the other sectors did not have. As

[1] For an overview of our new regulatory organization, refer to our fact sheet entitled, "Plain-Language Format of Emission Regulations for Nonroad Engines" EPA420-F-02-046, September 2002.

this process continued, we recognized that a single set of test procedures would allow for improvements to occur simultaneously across engine and vehicle sectors. A single set of test procedures is easier to understand than trying to understand many different sets of procedures, and it is easier to move toward international test procedure harmonization if we only have one set of test procedures. We note that procedures that are particular for different types of engines or vehicles, for example, test schedules designed to reflect the conditions expected in use for particular types of vehicles or engines, will remain separate and would be reflected in the standard-setting parts of the regulations.

In addition to reorganizing and rewriting the test procedures for improved clarity, we are proposing to make a variety of changes to improve the content of the testing specifications, including the following:

- Writing specifications and calculations in international units
- Adding procedures by which manufacturers can demonstrate that alternate test procedures are equivalent to specified procedures.
- Including specifications for new measurement technology that has been shown to be equivalent or more accurate than existing technology; procedures that improve test repeatability, calculations that simplify emissions determination; new procedures for field testing engines, and a more comprehensive set of definitions, references, and symbols.
- Defining calibration and accuracy specifications that are scaled to the applicable standard, which allows us to adopt a single specification that applies to a wide range of engine sizes and applications.

Some emission-control programs already rely on the test procedures in part 1065. These programs regulate land-based nonroad diesel engines, recreational vehicles, and nonroad spark-ignition engines over 19 kW.

In this notice, we are proposing to adopt the lab-testing and field-testing specifications in part 1065 for all heavy-duty highway engines, as described in Section II.J. These procedures would replace those currently published in subpart N in 40 CFR part 86. We are proposing a gradual transition from the part 86 procedures. We will allow the use of part 1065 procedures beginning in the 2006 model year. By the 2008 model year, part 1065 procedures will be required for any new testing. For all testing completed for 2007 and earlier model years, manufacturers may continue to rely on carryover test data based on part 86 procedures to certify engine families in later years. In addition, other subparts in part 86, as well as regulations for many different nonroad engines refer to the test procedures in part 86. We are including updated references for all these other programs to refer instead to the appropriate cite in part 1065.

Part 1065 is also advantageous for in-use testing because it specifies the same procedures for all common parts of field testing and laboratory testing. It also contains new provisions that help ensure that engines are tested in a laboratory in a way that is consistent with how they operate in use. These new provisions will ensure that engine dynamometer lab testing and field testing are conducted in a consistent way.

In the future, we may propose to apply the test procedures specified in part 1065 to other types of engines, so we encourage companies involved in producing or testing other engines to stay informed of developments related to these test procedures. We also request comment on whether we should make part 1065 applicable for light-duty vehicles, light-duty trucks, motorcycles, and aircraft in the future. Although light-duty vehicles, light-duty trucks, and motorcycles are tested on chassis dynamometers, rather than engine dynamometers, there are several aspects of

testing that are common. For example, emission sampling systems, dilution systems, gas analyzers, PM measurement equipment, some test sequences, fuels, analytical gas standards, and specifications related to oxygenated fuels are all similar. However, there are differences, such as chassis dynamometer specifications, vehicle intake air, exhaust system, and coolant specifications, some test sequences such as evaporative and refueling tests, vehicle preparation, and some emission calculations (e.g., g/mi vs g/kW-hr) that would have to be addressed in any future decision to apply part 1065 to these engines.

Although testing aircraft engines requires some special provisions, there are several aspects of testing that are common, such as emission sampling systems, dilution systems, gas analyzers, PM measurement equipment, some test sequences, fuels, analytical gas standards, and specifications related to oxygenated fuels.

B. Revisions to Part 1065

Part 1065 was originally adopted on November 8, 2002 (67 FR 68242), and was initially applicable to standards regulating large nonroad spark-ignition engines and recreational vehicles under 40 CFR parts 1048 and 1051. The recent rulemaking adopting emission standards for nonroad diesel engines has also made part 1065 optional for Tier 2 and Tier 3 standards and required for Tier 4 standards. The test procedures currently in part 1065 are sufficient to conduct testing, but we are proposing to reorganize and add content to improve these procedures. In particular, we propose to reorganize part 1065 by subparts as shown below:

Subpart A: general provisions; global information on applicability, alternate procedures units of measure, etc.
Subpart B: equipment specifications; required hardware for testing
Subpart C: measurement instruments
Subpart D: calibration and performance checks; for measurement systems
Subpart E: engine selection, preparation, and maintenance
Subpart F: test protocols; step-by-step sequences for testing and test validation.
Subpart G: calculations and required information
Subpart H: fuels, fluids, and analytical gases
Subpart I: oxygenated fuels; special test procedures
Subpart J: field testing
Subpart K: definitions, references, and symbols

We propose to scale specifications for test equipment and measurement instruments by parameters such as engine power, engine speed and the emission standards to which an engine must comply. That way a single set of specifications will cover the full range of engine sizes and our full range of emission standards and our regulations will therefore specify equipment and instruments that are appropriate for a given engine size and emission standard. Manufacturers will be able to use these specifications to determine what range of engines and emission standards may be tested using a given laboratory or field testing system.

The new content that we are proposing for part 1065 is mostly a combination of content from our most recent updates to other test procedures and from test procedures specified by the International Organization for Standardization (ISO). In some cases, however, new content is proposed that never existed in previous regulations. This new content addresses very recent issues such as measuring very low concentrations of emissions, using new

measurement technology, and performing field testing. A full description of the changes is in the Regulatory Support Document that accompanies this proposal.

The new content we are proposing also reflects a shift in our philosophy for specifying measurement performance. In the past we specified numerous calibration accuracies for individual measurement instruments, and we specified some performance checks for individual components, such as NO2 to NO converters. We have shifted our focus away from individual instruments and toward the overall performance of complete measurement systems. We did this for several reasons. First, some of what we specified in the past precluded the implementation of new measurement technologies. These new technologies, sometimes called "smart analyzers", combine signals from multiple instruments to compensate for interferences that were previously tolerable at higher emissions levels. These analyzers are useful for detecting low concentrations of emissions. They are also useful for detecting emissions from raw exhaust, which can contain high concentrations of interferences, such as water vapor. This is particularly important for field testing, which will most likely rely upon raw exhaust measurements. Second, this new "systems approach" challenges complete measurement systems with a series of periodic performance checks, which we feel will provide a more robust assurance that a measurement system as a whole is operating properly. Third, the systems approach provides a direct pathway to demonstrate that a field test system performs similarly to a laboratory system. This is explained in more detail in item 10., below. Finally, we feel that our systems approach will lead to a more efficient way of assuring measurement performance in the laboratory and in the field. We believe that this efficiency will stem from less frequent individual instrument calibrations, and higher confidence that a complete measurement system is operating properly.

We organized the new content relating to measurement performance into subparts C, D, F, and J. We specified measurement instruments in subpart C and periodic performance checks in subpart D. These two subparts apply to both laboratory and field testing. We organized content specific to laboratory testing in subpart F, and specific to field testing in subpart J.

In subpart C we specified the types of acceptable instruments, but we only recommend individual instrument performance. We provided these recommendations as guidance for procuring new instruments. We feel that the periodic performance checks that we required in subpart D will sufficiently evaluate the individual instruments as part of an overall measurement system. In subpart F we specified measurement performance validations that must be conducted as part of every laboratory test. In subpart J we specified similar measurement performance validations for field testing that must be conducted as part of every field test. We feel that the periodic performance checks in subpart D and the validations in subparts F and J that are required for every test ensure that complete measurement systems are operating properly.

In subpart J we also specified an additional overall performance check for a field test system. This check is a comprehensive comparison of a field test system versus a laboratory, and it may take several days of laboratory time to set up, run, and evaluate. We propose that this performance check must be performed at least once for a given make, model, and configuration of a field test system. We request comment on whether or not we should additionally require that this check be performed on every individual field test system at least once. We request comment on whether or not we should require the end-user of a field test system to perform this overall check. We believe that the performance checks in subpart D and the test validations in subpart J will ensure that an individual field test system is operating properly, however, we request comment on whether or not this comprehensive overall

check must also be required to completely ensure proper operation of an individual field test system.

Below is a brief description of the content of each subpart, highlighting some of the new content.

1. Subpart A General Provisions

In Subpart A we identify the applicability of part 1065 and describe how procedures other than those in part 1065 may be used to comply with a standard-setting part. We specify that testing must be conducted in a way that represents in-use engine operation, such that in the rare case where provisions in part 1065 result in unrepresentative testing, other procedures would be used. In subpart A we indicate the conventions we use regarding units and certain measurements and we discuss recordkeeping. We also provide an overview of how emissions and other information are used to determine final emission results. The regulations in §1065.15 include a figure illustrating the different ways we allow brake-specific emissions to be calculated.

In Subpart A we describe how continuous and batch sampling may be used to determine total emissions. We also describe the two ways of determining total work. Note that the figure indicates our default procedures and those procedures that would require additional approval before we would allow them for use.

2. Subpart B Equipment Specifications

Subpart B first describes engine and dynamometer related systems. Many of these specifications are scaled to an engine's size, speed, torque, exhaust flow rate, etc. We specify the use of in-use engine subsystems such as air intake systems wherever possible in order to best represent in-use operation when an engine is tested in a laboratory.

Subpart B next describes sampling dilution systems. These include specifications for the allowable components, materials, pressures, and temperatures. We describe how to sample crankcase emissions. We also propose to allow limited use of partial-flow dilution for PM sampling. We request comment on whether or not our specifications for partial-flow dilution and our specifications for proportional-sampling validation (i.e., §1065.140(d) and §1065.545) are sufficient for us to allow partial-flow dilution for all PM sampling without requiring alternate system approval.

Subpart B also specifies environmental conditions for PM filter stabilization and weighing. Although these provisions mostly come from our recent update to part 86, subpart N, we also describe some new aspects in detail.

The regulations in §1065.101 include a diagram illustrating all the available equipment for measuring emissions.

3. Subpart C Measurement Instruments

Subpart C specifies the requirements for the measurement instruments used for testing. In subpart C we recommend accuracy, repeatability, noise, and response time specifications for individual measurement instruments, but note that we require that overall measurement systems meet the calibration and performance checks in Subpart D.

In some cases we allow new instrument types to be used where we previously did not allow them. For example, we propose to allow the use of a nonmethane cutter for NMHC measurement, we propose to allow the use of non-dispersive ultra-violet analyzers for NO_x measurement, we propose to allow the use of zirconia sensors for NO_x and O_2 measurement, we propose to allow various raw exhaust flow meters for laboratory and field testing measurement,

and we propose to allow ultrasonic flow meters for CVS systems.

4. Subpart D Calibration and Performance Checks

Subpart D describes what we mean when we specify accuracy, repeatability and other performance parameters. We propose calibration and performance checks that scale with engine size and the emission standards to which an engine is certified. We propose to replace some of what we have called "calibrations" in the past with a series of performance checks, such as a linearity check, that essentially checks the calibration of an instrument without specifying how the instrument must be initially calibrated. Because new instruments have built-in routines that linearize signals and compensate for various interferences, our typical calibration specifications sometimes conflicted with an instrument manufacturer's instructions. In addition we propose new performance checks in subpart D to ensure that the new instruments we specified in Subpart C are used correctly.

5. Subpart E Engine Selection, Preparation, and Maintenance

Subpart E describes how to select, prepare, and maintain a test engine. We updated these provisions to include both gasoline and diesel engines. This subpart is relatively short, and we did not make many changes to its original content.

6. Subpart F Test Protocols

Subpart F describes the step-by-step protocols for engine mapping, test cycle generation, test cycle validation, pre-test preconditioning, engine starting, emission sampling, and post-test validations. We propose an improved way to map and generate cycles for constant-speed engines. The constant-speed mapping procedure we propose better represents in-use engine operation. We propose a more streamlined set of test cycle and proportional validation criteria. We propose to allow modest corrections for noise and drift of emission analyzer signals within a certain range. We also propose a recommended procedure for weighing PM samples.

7. Subpart G Calculations and Required Information

Subpart G describes all of the calculations that are required in part 1065. We propose definitions of statistical quantities such as mean, standard deviation, slope, intercept, t-test, F-test, etc. By defining these quantities mathematically we intend to resolve any potential mis-communication when we discuss these quantities in other subparts. We propose all of the calculations for calibrations and emission calculations in international units to comply with 15 CFR 1170, which removes the voluntary aspect of the conversion to international units for Federal agencies. Furthermore, Executive Order 12770 (56 FR 35801, July 29, 1991) reinforces this policy by providing Presidential authority and direction for the use of the metric system of measurement by Federal agencies and departments. For our standards that are not completely in international units (i.e. grams/horsepower-hour, grams/mile), we specify in part 1065 the correct use of internationally recognized conversion factors.

We also propose to calculate emissions based on molar quantities for flow rates, instead of volume or mass. This change eliminates the frequent confusion caused by the use of different reference points for standard pressure and standard temperature. Instead of declaring standard densities at standard pressure and standard temperature to convert volumetric concentration measurements to mass-based units, we declare molar masses for individual elements and compounds. Since these values are independent of all other parameters, they are known to be constant.

8. Subpart H Fuels, Fluids, and Analytical Gases

Subpart H specifies test fuels, lubricating oils and coolants, and analytical gases for testing. Because standard-setting parts for diesel engines now refer to part 1065, we are proposing diesel fuel specifications in part 1065. These fuel specifications are consistent with those previously adopted, with one exception. We propose to eliminate the Cetane Index specification for all diesel fuels because the existing specification for Cetane Number sufficiently determines the cetane levels of diesel test fuels. We propose to eliminate any detailed specification for service accumulation fuel. Instead, we propose that service accumulation fuel may be a commercially available in-use fuel. This change helps ensure that testing is representative of in-use engine operation. We propose to scale analytical gas specifications with the standards, which an engine must meet.

In addition, we request comment on whether or not we should consider revising our specifications for ultra low-sulfur diesel test fuel to reflect the expected lower distillation range relative to fuels with higher sulfur levels. We request comment on whether or not widening the distillation ranges by lowering the lower limit by 5 °C would better reflect in-use diesel fuels with sulfur concentrations below 15 ppm. The following table shows alternative distillation temperatures for ultralow-sulfur diesel test fuel, with the lower end of the distillation ranges lowered by 5 °C.

Alternate Distillation Range for Ultra Low-sulfur Diesel Fuel

Distillation Range:	Value
Initial Boiling Point	(166 to 204) °C
10% point, °C	(199 to 238) °C
50% point, °C	(238 to 282) °C
90% point, °C	(288 to 332) °C
End point, °C	(316 to 366) °C

9. Subpart I Oxygenated Fuels

Subpart I describes special procedures for measuring certain hydrocarbons whenever oxygenated fuels are used. We updated the calculations for these procedures in Subpart G. This subpart is relatively short, and we did not make many changes to its original content. We request comment on whether or not we should provide additional guidance for testing with oxygenated fuels. For example, the regulations currently include a general reference to 40 CFR part 86 for sampling procedures related to oxygenated fuels. We request comment on the degree to which any specific provisions in part 86 should be included in Subpart I.

10. Subpart J Field Testing

Although Subpart J Field Testing existed prior to this proposal, we are proposing many changes to this subpart. We are proposing that in general, field testing equipment and measurement instruments meet the same specifications and performance checks that laboratory instruments must meet, according to subparts B, C, and D. However, for field testing instruments, we propose to allow certain deviations from the laboratory specifications. In addition to meeting many of the laboratory system requirements, we propose that a field test system meet an overall performance check versus a laboratory. This check involves repeating a duty cycle several times. The duty cycle

itself must have several individual field test intervals (e.g., NTE events) against which the field test system is compared to the laboratory system. This is a comprehensive check of the field test system. We also propose a procedure for preparing and conducting a field test, and we propose additional drift and noise allowances for emission analyzers. Given the evolving state of portable emissions measurement technology, the proposed field testing procedures provide for a number of known measurement techniques. We request comment on the relative efficacy of these approaches and/or the need to consider additional methods. We plan to expand on this topic in an upcoming memo to the docket.

11. Subpart K Definitions, References, and Symbols

In Subpart K we propose some new and revised definitions of vocabulary that we frequently use in part 1065. For example we have revised our definitions of "brake power", "constant-speed engine", and "aftertreatment" to provide more clarity, and we have added new definitions for things such as "300 series stainless steel", "barometric pressure", and "operator demand". We propose definitions such as "duty cycle" and "test interval" to distinguish the difference between a single interval over which brake-specific emissions are calculated and the complete cycle over which emissions are evaluated in a laboratory. We also propose a thorough and consistent set of symbols, abbreviations, and acronyms. We propose to update our references to include references of the National Institute of Standards and Technology and the International Organization for Standardization (ISO).

II. Technical Amendments

A. Definitions and Penalties

We are proposing to revise several definitions that apply over more than one part of our regulations. These changes are designed to harmonize our regulations.

We are proposing to change the definition of Marine engine and Marine vessel to harmonize our approach to amphibious vehicles and clarify other issues. We have treated amphibious vehicles differently whether they had a diesel engine or a spark-ignition engine. We are proposing to harmonize our treatment of amphibious vehicles by consistently treating these as land-based products. We are also adding a provision defining amphibious vehicles are those that are designed primarily for operation on land to clarify that we don't consider hovercraft to be amphibious vehicles. See the Technical Support Document for additional information related to these definitions. In particular, note that we describe our interpretation of what it means for an engine to be "installed in a marine vessel." Manufacturers have raised several questions related to this issue, especially as it relates to portable engines installed on barges.

We are also considering changes to the definition for Spark-ignition and Compression-ignition. We define Compression-ignition as relating to reciprocating internal-combustion engines that are not spark-ignition engines. We limit these definitions to reciprocating engines to avoid including gas turbines under the definition of Compression-ignition. We currently do not have emission standards for gas turbines. A question has come up regarding how we should treat rotary engines, such as the Wankel engine. We request comment regarding whether the definition of Compression ignition should refer to "reciprocating and rotary engines" to clarify that rotary engines not meeting the definition for Spark-ignition engines would fall under our provisions for compression ignition engines.

We currently define Spark-ignition as follows:

> Spark-ignition means relating to a gasoline-fueled engine or any other type of engine with a spark plug (or other sparking device) and with operating characteristics significantly similar to the theoretical Otto combustion cycle. Spark-ignition engines usually use a throttle to regulate intake air flow to control power during normal operation.

This definition has left some confusion regarding natural gas engines that have a throttle, but perhaps do not clearly have operating characteristics that are significantly similar to the theoretical Otto combustion cycle. As an alternative, we are considering the following definition to remove this ambiguity:

> Spark-ignition means relating to a gasoline-fueled engine or any other type of engine with a spark plug (or other sparking device). Engines that use diesel fuel are not spark-ignition engines.

Such a simple approach would be very clear, but could have the effect of defining some natural gas engines that have operating characteristics that are significantly similar to the theoretical diesel combustion cycle as spark-ignition engines. This may be appropriate, but it would represent a change from our existing policy for these engines. We are also considering another definition, as follows:

> Spark-ignition means relating to a gasoline-fueled engine or any other type of engine with a spark plug (or other sparking device) and with operating characteristics similar to the theoretical Otto combustion cycle. Spark-ignition engines usually burn a premixed charge of air and fuel. Engines that use diesel fuel are not spark-ignition engines.

This definition aims for consistency with the existing policy, but focuses on premixed combustion instead of the throttle to indicate whether natural gas engines are more appropriately regulated as compression-ignition or spark-ignition engines.

We welcome comment on all of these possible definitions of spark-ignition, as well as other possible approaches to this definition.

The Clean Air Act specifies maximum penalty amounts corresponding to each prohibited Act. These maximum penalty amounts are periodically adjusted for inflation, based on the provisions of the Debt Collection Improvement Act. These maximum penalties have been updated under 40 CFR part 19. The new maximum penalties are $32,500 for introducing noncompliant engines into commerce for manufacturers guilty of tampering, and $2,750 for non-manufacturers guilty of tampering. In addition, the maximum penalty we can recover using administrative procedures is $270,000. We are proposing to extend these revised penalties into each of our emission-control programs.

B. Nonroad general compliance provisions (40 CFR part 1068)

In addition to the changing test procedures described above, we are proposing or considering changes that would affect multiple engine categories.

We are proposing several amendments to the provisions of 40 CFR part 1068, which currently apply to land-based nonroad diesel engines, recreational vehicles, and nonroad spark-ignition engines over 19 kW. We encourage manufacturers of other engines to take note of these changes, since we intend eventually to apply the provisions of part 1068 to all engines subject to EPA emission standards. Note that we are not requesting comment on the whole range of provisions in part 1068, but rather on those items that are included in this proposal. These changes include the following:

- §1068.10: Clarify confidentiality provisions to address how we treat information that we collect from on-site visits or testing, as opposed to information that manufacturers send to us.

- §1068.30: Add or correct definitions to coordinate with the standard-setting parts and clarify various terms.
- §1068.105: Expand paragraph (a) to better explain requirements for equipment manufacturers to use current model-year engines. This relates especially to the existing provision that allows equipment manufacturers to use up their normal inventories of engines from previous model years in cases where a new emission standard takes effect. We propose to change §1068.101(a)(1) to reflect these changes.
- §1068.110: Clarify that the manufacturers' warranty obligation includes all expenses related to diagnosing and repairing or replacing emission-related parts. This is not intended to include incidental expenses (such as replacement units during warranty service), consequential damage (such as damage caused by engine malfunction), or opportunity costs (such as foregone revenue from engine downtime).
- §1068.115: Add text to paragraph (a) to provide a complete list of reasons for manufacturers to deny warranty claims. This clarifies that the list of reasons given in paragraph (b) is descriptive, and is not intended to be comprehensive.
- §1068.245: Clarify that manufacturers applying for hardship must use the provisions of §1068.250 (if applicable) before applying for hardship under §1068.245. This is necessary to remove the ambiguity resulting from the current approach, which specifies that both §§1064.245 and 1068.250 are provisions of last resort.
- §1068.260: Clarify that including the cost of separately shipped components means that the cost of shipping must also be addressed.
- §1068.265: Add provisions that clarify what manufacturers must do when they are required to meet emission standards for engines that are not certified. A typical example would be an exemption that applies to new engines that replace an old engine that was certified to emission standards. We already require these engines to have the same degree of emission control as the replaced engine. We do not want manufacturers to certify these engines, but we are proposing to add requirements to clarify how manufacturers can show that the new engines meet an older set of emission standards. This involves either using an engine that is the same as one that was certified in an earlier model year, or performing tests to show that the engines meet the specified emission levels. In any case, manufacturers would not need to go through the process or pay the fees associated with certification. We recently adopted these same provisions for nonroad diesel engines and are proposing to extend them to the other engine categories covered by part 1068.
- §1068.315: Reduce the ownership requirement for the identical configuration exemption from one year to six months; also, change the qualifying criterion from "the same as" to "identical to."
- §1068.410: Add provisions allowing manufacturers to test engines up to three times total if an engine family reaches a fail decision under selective enforcement auditing, consistent with the provisions that apply under most of our programs.
- §1068.510: Clarify that manufacturers must describe the qualifications of repair personnel, rather than simply stating that they are qualified.

C. Land-based nonroad diesel engines (40 CFR parts 89 and 1039)

We recently adopted a new tier of emission standards for nonroad diesel engines, codifying these standards in 40 CFR part 1039. This rulemaking led us to make several regulatory changes to the existing tiers of standards for these engines in 40 CFR part 89. In cases where we discovered the need for changes after publishing the proposed rule, but we did not make those changes to part 89 in the final rule out of concern that the public had not had an opportunity for comment. Similarly, we are proposing some adjustments to part 1039, based on information that

surfaced late in that rulemaking. We are proposing the following changes in part 89 and part 1039:

- §89.102: Clarify that equipment manufacturers using allowances under this section may use lower-emitting engines than we currently require.
- §89.110 and §89.1009: Allow manufacturers to identify a different company's name and trademark on the emission control information label, with additional provisions to ensure that operators take certain steps to ensure that operators have the full benefit of the emission-related warranty.
- §89.130: Refer to the nearly identical provisions for rebuilding engines in §1068.120.
- §89.410: Allow manufacturers to use ramped-modal testing, as specified for engines that must meet the Tier 4 standards.
- Appendix A to subpart F: Correct the ranges of values to address an unintentional gap for sales volumes between 300 and 500.
- §89.603: Clarify that standards applicable to Independent Commercial Importers (ICIs) are those of the year in which the imported engine was originally produced, for up to five engines per year. See the Technical Support Document and the discussion below related to highway engines and vehicles for additional information.
- §§89.913 and 89.914: Allow engine and equipment manufacturers to use the engine-dressing provisions in §§1039.605 and 1039.610.
- §89.1003: Clarify that engine manufacturers may ensure that the replaced engine is destroyed instead of taking possession of it; add a new label requirement for replacement engines that are allowed to meet a less stringent set of standards that are in effect when the replacement engine is built (to address the case where the engine being replaced was subject to emission standards less stringent than the current standards).
- §89.1003: Clarify that violating the requirements to rebuild an engine to its original configuration is considered tampering with respect to the applicable penalties.
- §89.1 and §1039.5: Allow manufacturers to include marine auxiliary engines in an engine family certified under part 89 or 1039, subject to certain limitations.
- §1039.1: Clarify that residence-time limits do not apply to engines used in stationary applications if they have been certified to nonroad emission standards.
- §1039.104, 1039.625, and 1039.655: Change cross-reference from §1039.260 to §1068.265.
- §1039.125: Clarify that a manufacturer's obligation to pay for scheduled maintenance under certain situations is limited to the useful life of the engine.
- §1039.225: Include a modified FEL as the basis for a change to the application for certification, consistent with current practice.
- §1039.240: Adding section references that were inadvertently omitted.
- §1039.510: Remove provisions that are covered by part 1065.
- §1039.605 and §1039.610: Clarify the ABT responsibilities relative to engines or vehicles that are certified under the motor-vehicle program and used in nonroad applications.
- §1039.705: Add a constraint for averaging, banking, and trading to prevent manufacturers from including credits earned in California if there would ever be a situation where they are required to meet separate standards in California (or another state).
- §1039.740: Correct the provisions allowing the use of emission credits to from previous tiers of emission standards to include an item that was inadvertently omitted from the Tier 4 final rule, as described in the preamble to that final rule.

- §1039.801: Update various definitions to reflect the change to move the full text of these definitions to part 1068.

In the Tier 4 final rule, we adopted a revised provision allowing manufacturers to request a useful life shorter than that specified for engines generally. Our recent experience with a similar provision for marine diesel engines has shown that it can be difficult to implement. The main difficulty relates to the extent and quality of the information manufacturers must supply to establish an alternate useful-life period. As a result, we are interested in changing this provision. A similar provision has been in place in part 89 since the beginning of emission standards, but we are not aware of anyone requesting a shorter useful life for any particular application. In the similar consideration of this provision for nonroad spark-ignition engines, the only manufacturers that we would expect to consider a shorter useful life would be for engines used in concrete saws, concrete pumps or similar severe-duty applications. To establish a shorter useful life for a set of engines, manufacturers would need to establish a separate engine family and pay the associated fees for certification. It is not clear that any manufacturer of nonroad diesel engines would make the extra effort or face the extra expense of segregating a family for a shorter useful life. We therefore request comment on removing this provision. We also request comment on the approach under consideration for spark-ignition engines, namely to remove the current approach of requesting a shorter useful life and replacing it with a useful life of 1500 hours for engines used in concrete saws, concrete pumps, and similar severe-duty engines. The useful life in years would be the same for all engines.

During the Tier 4 rulemaking, equipment manufacturers raised a concern regarding diesel engines certified to meet Tier 4 standards based on the use of catalyst technology relying on ultra low-sulfur fuel, where those engines are exported to countries with a higher sulfur content in diesel fuel. Many pieces of equipment may be designed and manufactured for the U.S. domestic market and eventually sold to an end-user that may use the equipment outside of the United States. The resulting damage to the emission-control system after extended exposure to the higher sulfur fuel could permanently reduce the effectiveness of emission controls. One possible solution would be to require that engines exported from the United States have the engine label and the aftertreatment removed before shipping the engine. This in effect invalidates the engine's certification, which would make it illegal to continue to use the engine in the United States, or to later import the engine back into the United States. Two potential drawbacks include reconciling the total balance of emission credits under the averaging, banking, and trading program and reconciling the use of the engine in an existing flexibility program. Alternatively, we could require tracking engines and documenting end-use status once it has been placed in equipment. We seek comment on the use of such a provision to prevent re-importation of engines that are exposed to fuel sulfur levels that would be considered tampering if it occurred in the United States.

D. Marine diesel engines (40 CFR part 94)

We are proposing several changes to our diesel marine engine program, in 40 CFR part 94. These changes are intended to clarify several aspects of the program. These changes, which are described in more detail in the Technical Support Document, are as follows:

- §94.2: Modify the definitions of "marine engine" and "marine vessel" and add a new definition of "amphibious vehicle" to clarify what kinds of amphibious vehicles are not considered marine vessels; modify the definition of "United States" to remove the reference to the Trust Territories of the Pacific

Islands.

- 94.904: Allow the sale of an exempted or excluded engine if it is certified or identical to a certified engine.
- §94.907: Allow vessel manufacturers to take advantage of the engine dresser provisions; clarify the reporting requirement to specify that the total number of dressed engines produced by all companies dressing that base engine for use in a marine vessel is less than 50 percent of total annual sales for the base engine; add language clarifying the requirements related to generating and using emission credits with these engines.
- §94.912: Exempt marine auxiliary engines from the part 94 requirements as long as they are included in an engine family certified under part 1039 or 89, subject to certain limitations.
- §94.1001: Revise applicability to clarify that the provisions in Subpart K apply to manufacturers, owners, and operators of marine vessels that contain engines with per-cylinder displacement of at least 2.5 liters.
- §94.1103: Clarify that the engine manufacturer may ensure that the replaced engine is destroyed instead of taking possession of it; add a new label requirement for replacement engines that are allowed to meet a less stringent set of standards than are in effect when the replacement engine is built (to address the case where the engine being replaced was subject to less stringent emission standards).

The Technical Support Document also clarifies the conditions under which an auxiliary engines used on a marine vessel will be considered a marine auxiliary engine and be subject to 40 CFR 94.

E. Small nonroad spark-ignition engines (40 CFR part 90)

We are proposing to add a new section 90.913 to better define the responsibilities for manufacturers choosing to certify their engines below 19 kW to the emission standards for Large SI engines in 40 CFR part 1048. We are also revising section 90.1 to cross-reference provisions in parts 86, 1048, and 1051 that allow highway motorcycle engines and nonroad engines above 19 kW to meet the requirements in part 90 under certain conditions.

We have adopted a new approach to define maximum engine power in 40 CFR part 1039 for nonroad diesel engines for purposes of defining the applicability of standards. This definition includes a detailed procedure for determining this value. The current approach for Small SI engines is to rely on a definition of "gross power" that describes generally how to characterize an engine's maximum power. We request comment on adopting the new definition of maximum engine power in 40 CFR part 90. This would have the advantage of harmonizing our treatment of this basic tool to characterize engines and would allow for consistent treatment across programs. See the Technical Support Document for more information.

In addition, we are updating current references to test procedures in 40 CFR part 86 by pointing instead to 40 CFR part 1065. Manufacturers are also encouraged to review the proposed provisions in 40 CFR part 1065, since we intend eventually to apply those same procedures to Small SI engines. In particular, we have noted that the equations in §90.426(b) and (d) for calculating mass flow rate and dilution factor differ from the comparable equations in part 1065, subpart G. We request comment on applying the equations from part 1065, subpart G, to Small SI engines for calculating these values.

F. Marine spark-ignition engines (40 CFR part 91)

We are proposing only minimal changes for marine SI engines in 40 CFR part 91. These changes are primarily to update current references to test procedures in 40 CFR part 86 by pointing instead to 40 CFR part 1065. We are also updating various definitions, as described in Section II.A. Manufacturers are also encouraged to review the proposed provisions in 40 CFR part 1065, since we intend eventually to apply those same procedures to marine SI engines.

G. Large nonroad spark-ignition engines (40 CFR part 1048)

We adopted emission standards for nonroad spark-ignition engines over 19 kW in November 2002 (67 FR 68242). The regulations in 40 CFR part 1048 were our first attempt to draft emission-control regulations in plain-language format. In the recent final rule for nonroad diesel engines, we went through a similar process, including extensive interaction with a different set of manufacturers. This process led us adopt regulatory provisions in 40 CFR part 1039 that differ somewhat from those in part 1048. Since the process of meeting standards, applying for certificates, and complying with other emission-related requirements has a lot of commonality across programs, we have a strong interest in adopting consistent provisions and uniform terminology where possible. As a result, we are proposing extensive changes in part 1048 to align with the regulations in part 1039. Many of these changes reflect minor wording differences. The more significant changes to part 1048 include the following:

- §1048.105: Exclude marine fuel tanks from the standards for evaporative emissions. This is appropriate, because the fuel-hose requirements are incompatible with Coast Guard requirements and because we are developing a separate emission-control program that would apply to all fuel tanks associated with marine spark-ignition engines.
- §1048.135: Add a requirement for manufacturers to supply duplicate labels. This corresponds with the recently adopted provisions of 40 CFR 1068.105(c) that ensure that equipment manufacturers will take steps to prevent the misuse of duplicate labels.
- §1048.135: Allow manufacturers to identify a different company's name and trademark on the emission control information label, with additional provisions to ensure that manufacturers take certain steps to ensure that operators have the full benefit of the emission-related warranty.
- §1048.145: Add detailed provisions to the family-banking provisions to better define the qualifying criteria and the process for using this provision. For example, we establish a date by which manufacturers must begin production of early-compliant engines to avoid giving credits for marginal early production, we clarify that the late-complying engines must continue to meet the Tier 1 standards, and we add a requirement that manufacturers report the number of engines they produce under this provision to allow us to verify compliance.
- §1048.310: Clarify that the maximum testing rate of 1 percent for production-line testing applies only after testing the minimum number of engines specified.
- §1048.501: Allow an optional procedure for measuring diurnal emissions from plastic fuel tanks. This addresses the fact that we intended to control diurnal emissions from fuel tanks, not permeation emissions. This will have minimal environmental impact, since plastic fuel tanks are rarely used with industrial spark-ignition engines. While we may consider adding permeation controls in the future, we are proposing to adopt procedures that would not require no upgrades to plastic fuel tanks at this time.
- §1048.505: Allow manufacturers to use ramped-modal testing for simplified measurement of steady-state

emission results. See the Technical Support Document for additional discussion or ramped-modal testing.

For discussion of additional changes, see the Technical Support Document.

In the November 2002 final rule, we adopted a provision allowing manufacturers to request a useful life shorter than that specified for engines generally. Our recent experience with a similar provision for marine diesel engines has shown that it can be difficult to implement. The main difficulty relates to the extent and quality of the information manufacturers must supply to establish an alternate useful-life period. As a result, we are interested in changing this provision. As far as we are aware, the only manufacturers that might reasonably consider a shorter useful life would be for engines used in severe-duty applications. To establish a shorter useful life for a set of engines, manufacturers would need to establish a separate engine family and pay the associated fees for certification. During the rulemaking, manufacturers of these engines suggested that their engines rarely operate longer than 1500 hours. We therefore request comment on removing the current approach of requesting a shorter useful life and replacing it with a useful life of 1500 hours for severe-duty engines. The useful life in years would be the same for all engines.

Starting in the 2007 model year, manufacturers must show that they meet emission standards over a transient duty cycle. The specified transient duty cycles were based on real-world operation from in-use engines. While these duty cycles were extensively tested with a variety of engines over the course of the rulemaking, we have learned that certain high-speed engines may not be able to sufficiently match the speed-load trace in the duty cycle to meet cycle-validation criteria. The cycle was developed with engines that were designed with governed speeds around 3000 rpm. For example, for engines with governed speeds of 3600 rpm or higher, the denormalized duty cycle may have exaggerated acceleration rates that exceed an engine's capability.[2] In this situation, manufacturers would be able use a modified duty cycle under the provisions for special test procedures in 40 CFR 1065.10. We request comment on the need for using the provision for special test procedures to address this situation. We also request comment on whether it would be appropriate to make cycle-related adjustments in the regulation. This could take the form of relaxed values for cycle validation criteria, limits to cap acceleration rates, using different maximum-speed and maximum-torque values for denormalizing, or other approaches.

H. Recreational vehicles (40 CFR part 1051)

We are proposing to make several adjustments and clarifications to the regulations for recreational vehicles in part 1051, including the following:

- Clarify the characteristics for evaporative emission families to include items we inadvertently omitted from the November 2002 final rule, and make it clearer how evaporative and exhaust emission families relate to each other.
- Clarify the evaporative test procedures regarding steps to seal the fuel tank.
- Define "Fuel lines" to remove uncertainty related to which products are subject to permeation standards.
- Specify a maximum 8-hour time period between refueling and starting the permeation test run and clarify

[2] The prescribed duty cycle is a normalized sequence of speeds and loads expressed as a percentage of an engine's maximum values. Before testing, these percentage values must be denormalized into rpm and N-m values that are specific to the test engine based on its maximum speed and torque capabilities.

that extending permeation testing from two weeks to four weeks depends on establishing a linear change in emissions based on daily measurements.

- Clarify that youth-model ATVs and off-highway motorcycles count toward meeting the phase-in requirements.
- Remove the ATV FEL cap for carbon monoxide, which was inadvertently left in the final regulations.
- Specify that the warranty period may be based on hours of engine operation in addition to odometer readings.
- Allow rounding of Normalized Emission Rates to one decimal place, rather than to the nearest whole number, and adding additional equations for smaller engines.
- Change the minimum useful life for youth-model ATVs and off-highway motorcycles to 5,000 kilometers and 500 hours.
- Allow all ATVs certifying to J1088 to use the raw gas sampling provisions of Part 91 for engine testing through the 2008 model year, which was intended in the November 2002 final rule.
- Allows manufacturers to test engines based on an engine's maximum power if that better represents in-use operation, rather than using the specified procedure to establish maximum test speed.
- Adopt a speed threshold to exclude low-speed all-terrain vehicles from part 1051. For example, low-speed amphibious vehicles not meeting the definition the definition of offroad utility vehicles would be covered by part 90 instead of part 1051.

These provisions are all discussed in more detail in the Technical Support Document. In addition, we request comment regarding whether it is appropriate to adopt a ramped-modal test method as an alternative for the steady-state tests applicable to recreational vehicles under §1051.505 and §1051.615. This is also discussed in more detail in the Technical Support Document.

We adopted emission standards for recreational vehicles in November 2002 (67 FR 68242). The regulations in 40 CFR part 1051 were our first attempt to draft emission-control regulations in plain-language format. In the recent final rule for nonroad diesel engines, we went through a similar process, including extensive interaction with a different set of manufacturers. This process led us to adopt regulatory provisions in 40 CFR part 1039 that differ from those in part 1051. Since the process of meeting standards, applying for certificates, and complying with other emission-related requirements has a lot of commonality across programs, we have a strong interest in adopting consistent provisions and uniform terminology as much as possible. As a result, we are proposing extensive changes in part 1051 to align with the regulations in part 1039. Many of these changes reflect minor wording differences. The more significant changes to part 1051 include the following:

- §1051.135: Allow manufacturers to identify a different company's name and trademark on the emission control information label, with additional provisions to ensure that operators take certain steps to ensure that operators have the full benefit of the emission-related warranty.
- §1051.135: Add a requirement for manufacturers to supply duplicate labels. This corresponds with the recently adopted provisions of 40 CFR 1068.105(c) that ensure that equipment manufacturers will take steps to prevent the misuse of duplicate labels.
- §1051.135: Add a requirement to include the hang-tag label with normalized emission rates in the application for certification.
- §1051.225: For situations where the Family Emission Limit changes during a model year, the manufacturer

calculates the credit balance for the family based on the FEL that applies for the corresponding production volume. This allows manufacturers to generate more credits (or use fewer credits), but this is consistent with the fact that manufacturers are liable for the emission-control performance of each engine relative to the FEL that applied at the point of production.

- §1051.501: Add "or add" in paragraph (b)(2) to clarify that the addition of fuel would not be allowed after the first weight measurement is taken in the permeation test run.
- §1051.705: Add a constraint for averaging, banking, and trading to prevent manufacturers from including credits earned in California if there would ever be a situation where they are required to meet separate standards in California (or another state).
- §1051.505 and 1051.615: We request comment on adding an option to allow manufacturers to conduct steady-state testing using ramped-modal cycles, as described in the Technical Support Document.

We request comment on all these changes to part 1051.

I. Locomotives (40 CFR part 92)

We are proposing a variety of changes for our locomotive regulations in 40 CFR part 92 to make correct various technical references and typographical errors. See the Technical Support Document and the proposed regulations for additional information.

In addition, we are requesting comment on a few additional items. The Engine Manufacturers Association recommended several revisions to the locomotive regulations.[3] We are proposing many of these changes, and are requesting comment on those that we are not proposing. We are especially interested in comments related to EMA's request to revise the accuracy specifications found in §§92.104(b)(1)(i), 92.105(d), 92.106(b)(1)(ii), 92.107(a)(1), and 92.126(b)(3). These comments generally express a concern that the adopted specifications require too much precision or accuracy. We request further comment on the achievable level of precision and accuracy for these specifications, and on the degree to which we should change the specified values.

The standards for locomotive engines currently do not apply to engines used in locomotives if they have a maximum power below 750 kW. These engines are generally designed and manufactured for other applications, so they are excluded from locomotive standards and procedures. We have received a request that we allow engines below 750 kW that are used in locomotives to optionally certify to locomotive standards instead of the otherwise applicable requirements of 40 CFR part 89.[4] This commenter suggested the following addition to the regulations in 40 CFR part 92:

> The manufacturer or remanufacturer of a vehicle propelled by an engine rated less than 750 kW, but that otherwise meets all the requirements of this definition may elect to have it treated under this part rather than under part 89 by giving written notice of such election to the Administrator. All of the provisions of this

[3] "Recommended Technical Amendments to EPA Tier 0/1/2 Locomotive Rule," Handout from the Engine Manufacturers Association, October 2003 (Docket #OAR-2004-0017-0002).

[4] "Inclusion of the Railpower Green Goat Hybrid Locomotive 40 CFR 92 Averaging, Trading, and Banking" e-mail from Christopher Weaver, Railpower, May 7, 2004 (Docket #OAR-2004-0017-0003).

part shall apply to vehicles for which such an election is made.

We continue to believe that engines below 750 kW should be regulated as nonroad diesel engines under part 89. However, we request comment on this suggestion to allow manufacturers to optionally meet the standards in part 92 instead. We also request comment regarding the applicability of the line-haul emission standards to these low-power locomotive engines. Finally, we request comment on alternate calculations to address the equivalent tractive horsepower of hybrid locomotives.

J. Highway engines and vehicles (40 CFR part 86)

1. Light-duty Vehicles

a. Calculation Method for Nonmethane Hydrocarbons

Text changes are proposed to properly align EPA and CARB calculation methods for measuring nonmethane hydrocarbons from gasoline, diesel, methanol, ethanol, and liquefied petroleum gas fueled light-duty vehicles. Harmonization of EPA and CARB testing and calculation practices, including proper accounting for the methane response of the total hydrocarbon FID, was anticipated when Tier 2 regulations were developed. Modifying the language in 86.121-90(d) and 86.144-94(c)(8)(vi) to explicitly require the use of a measured methane response factor, as opposed to the current CFR text which specifies an assumed methane response factor of 1.0, will align the calculation methods. Calculating nonmethane hydrocarbon using a measured methane response factor is the technically correct calculation and measurement method.

b. Correction to Tier 2 Regulations

On December 6, 2002, we made some minor technical amendments to EPA's Tier 2/Gasoline Sulfur regulations (67 FR 72821, December 6, 2002). However, those actions mistakenly reversed a prior correction to Table S04-2 in § 86.1811-04(c)(6) that was made on February 28, 2000 (65 FR 10598, February 28, 2000). We are now reestablishing the correct version of that table. Specifically, in § 86.1811-04(c)(6), in Table S04-2, the "Notes" entry corresponding with "Bin No. 9"' should read "a b e f g h".

c. Correction to Supplemental Federal Test Procedure Regulations

We propose to make the following corrections to regulatory references, spelling, and the like with these technical amendments:

- An incorrect regulatory reference is corrected in section 86.158-00;
- Revision to section 86.161-00 inserts the correct humidity tolerance of plus-or-minus 5 grains of water/pound of dry air; and
- Revision to the equation in section 86.164-00 adds plus ("+") signs that were omitted in the regulations.

d. Correction to National Low Emission Vehicle Regulations

In several places in the National Low Emission Vehicle (NLEV) emissions standards there are typographical errors affecting emission standards and testing provisions which require correction:

- Incorrect in-use formaldehyde standards for light-duty vehicles in tables R99-5 and R99-6 (§ 86.1708-99).
- Incorrect model year applicability of in-use standards for light-duty trucks (§ 86.1709-99(c)(1)).
- Missing standards for light-duty trucks from 0-3750 loaded vehicle weight in Table R99-14.2 (§ 86.1709-99).
- Correction of fleet average NMOG standards for calculating credits for 1997 and 1998 model years in the

Northeast Trading Region (§ 86.1710-99(c)(8)).

- Correcting a reference to 86.1705-99(e)(4) that should have been to 86.1707-99(d)(4) (§ 86.1711-99).

2. Highway Motorcycles

a. Highway Motorcycle Labeling Requirements

On January 15, 2004, we finalized new emission standards for highway motorcycles (69 FR 2398, January 15, 2004). These new standards are implemented in two stages: a "Tier 1" that is effective in the 2006 through 2009 model years, and a "Tier 2" that takes effect starting with the 2010 model year. These standards are generally harmonized with California emission standards that take effect two years earlier. Under the new standards, Class III motorcycles must comply with a new HC+NOx emission standard on a corporate average basis. This new flexibility allows manufacturers to market motorcycles that produce more pollution than the designated average standard as long as they are balanced out by sales of less-polluting models such that the manufacturers' sales-weighted corporate average remains below the standard. Averaging is also optionally allowed for Class I and II motorcycles.

Since publishing the final rule, however, we realized that the labeling language for highway motorcycles is not helpful in the context of the new averaging standard. The current federal labeling language (see 40 CFR 86.413-78) only requires that a motorcycle label indicate compliance with EPA standards for a given model year. This is all that is needed when there is no uncertainty regarding what the applicable emission standards are. In the context of the type of averaging program we finalized, however, the manufacturers essentially choose their own emission standard (up to a cap) for each engine family. The manufacturer-selected emission standard is known as a "Family Emission Limit," or FEL. For example, a manufacturer with two engine families might market one meeting a standard of 2.2 grams/mile HC+NOx and another one meeting a standard of 0.5 grams/mile HC+NOx. If these are equally-selling engine families, then the manufacturer will meet the required Tier 1 average of 1.4 grams/mile HC+NOx.

In the case described above, a label with only the model year will not provide adequate information regarding the applicable emission standard. Historically both EPA and ARB have required labels that identify the specific applicable FEL for vehicles certified under averaging programs. Therefore, we are amending the labeling requirements with two goals in mind. First, the label must provide sufficient information regarding the applicable emission standard and model year, as well as specific tune-up information. Second, the label requirements should be aligned with ARB to the greatest degree possible to prevent a situation where the manufacturer has to apply two labels to a motorcycle to meet two different sets of requirements. The new labeling language in 40 CFR 86.413-2006 accomplishes both of these goals.

b. Highway Motorcycle Fuel Specifications

In our final rule setting new emission standards for highway motorcycles (69 FR 2398, January 15, 2004) we updated the fuel specifications for motorcycle emission testing to be consistent with the fuel specifications finalized on February 10, 2000, as part of our "Tier 2 Motor Vehicle Emissions Standards and Gasoline Sulfur Control Requirements" (65 FR 6697, February 10, 2000). This was necessary to ensure that motorcycles are tested using fuels consistent with those available in the marketplace. We received no negative comments on making this change. It is necessary at this time to correct some errors that were made in updating the motorcycle test fuel specification. The specific corrections are:

- Changing the volume percent of aromatics from "35 minimum" to "35 maximum";
- Changing the phosphorous g/liter specification from 0.005 g/liter to 0.0013 g/liter (the alternative

specification is 0.005 g/U.S. gallon);

- Changing the sulfur weight percent from 0.08 maximum to 0.008 maximum; and
- Changing the volatility test procedure from "ASTM D 3231" to "ASTM D 323."

c. Highway Motorcycles with engines below 50 cc

We are proposing modified language in §86.447 and §86.448 to clarify various aspects of the provision allowing manufacturers to use products certified to nonroad emission standards instead of the standards for highway motorcycles under part 86. These changes include the following:

- Clarify the requirement related to the number of engines that may be certified under nonroad programs.
- Define the requirements related to generating and using emission credits with these engines.
- Add language to better define the legal responsibilities for companies involved in producing motorcycles under this provision.

3. Heavy-duty highway engines

As discussed above, we are proposing to adopt the lab-testing and field-testing specifications in part 1065 for heavy-duty highway engines, including both diesel and Otto-cycle engines. These procedures replace those currently published in 40 CFR part 86 subpart N. We are proposing a gradual transition from the part 86 procedures over a period of two model years in order to fully migrate to part 1065, no later than model year 2008. Manufacturers would not need to conduct new testing if they are able to use carryover data, but any new testing for 2008 and later model years would be done using the part 1065 procedures. Migrating heavy-duty highway engines to the part 1065 procedures allows us to include all the testing-related improvements in the HD2007 rule, including those we have adopted through guidance.[5] In addition, part 1065 incorporates revisions based on updated procedures for sampling low concentrations of PM.

We are also proposing to require manufacturers to use ramped-modal testing to show that they meet steady-state emission standards using the Supplemental Emissions Test (SET), which will be required for model year 2007 and later engines. The conventional approach for steady-state testing is to measure emissions separately for each mode. Ramped-modal testing involves a single, continuous emission measurement as the engine operates over the test modes in a defined sequence, including short transition segments between modes. Ramped-modal testing offers several advantages, primarily that of increased accuracy for measuring very low levels of PM emissions. See the Technical Support Document for additional information on the advantages of ramped-modal testing.

We are also clarifying that certain data requirements related to Supplemental Emission Testing are required only when engines are subject to Maximum Allowable Emission Limits.

Part 1065 bases the denormalized duty cycle on "maximum test speed," which differs somewhat from the traditional approach from part 86 of relying on rated speed. We request comment on whether or not we need to adjust how maximum test speed is applied to heavy-duty highway diesel engines to better represent in-use operation. Specifically, we request comment on whether or not we should specify that maximum test speed should be equal to

---

[5] "Guidance Regarding Test Procedures for Heavy-Duty On-Highway and Non-Road Engines, " December 3, 2002.

the 112 % speed from the duty cycle for this particular sequence. This would shift the prescribed speeds that are in excess of 100 % speed to be no greater than 99.92 % of maximum test speed. This adjustment would prevent excessive speeds, while ensuring our intent to specify maximum test speed to test an engine over its complete operating range.

We are proposing a minor adjustment to the phase-in process for the HD2007 standards to allow manufacturers to make their compliance demonstration either on the basis of model years or calendar years. This increases the flexibility for manufacturers to define their model year without affecting their ability to show that they meet their phase-in obligations. Because the phase-in period is three years under either approach, we believe this adjustment would not harm the environmental objectives of the program.

In the recently finalized Nonroad Diesel Tier 4 final rule, we included new regulatory provisions allowing engine manufacturers to ship engines and aftertreatment separately to equipment manufacturers, provided several criteria were met (69 FR 39308, June 29, 2004). These criteria were based on two main principles. First, the engine manufacturer is responsible to ensure that equipment manufacturers are fully aware of their responsibilities for proper installation of the engine and catalyst system. Second, the engine manufacturer has the primary responsibility for ensuring the engine and catalyst are properly installed. While the engine manufacturer has the primary responsibility, we may also find the equipment manufacturer liable under certain circumstances. We request comment on applying similar provisions to allow separate shipment of engines and aftertreatment for heavy-duty highway engine manufactures, including both gasoline and diesel engines. In addition, we request information that would indicate to what extent the heavy-duty highway engine/catalysts/vehicle manufacturer business relationships are similar to those for nonroad diesel engines, and whether the same provisions should apply to the companies producing highway engines and vehicles as we have adopted for the nonroad diesel engines and equipment.

We are taking this opportunity to clarify an aspect of the information reporting requirements described in a recently proposed rule making for manufacturer in-use testing of heavy-duty vehicles. The Notice of Proposed Rule Making (NPRM) for the manufacturer-run in-use testing program (FR Cite) was issued June 3, 2004. Section K in the preamble provides a non-exhaustive example of the types of engine parameters commonly stored in the engine's on-board computer and requires manufacturers to report those parameters which are readily available. We want to be clear that not only should those parameters be reported to EPA, but that they also must be reported to and stored by any portable emissions measurement system used to meet the testing requirements described in the NPRM. Because the proposed regulatory language in 40 CFR part 1065, subpart J contained in today's notice does not contain all of the parameters we intended to be required in the manufacturer in-use testing program, we expect that section 86.1920(a)(4)(xii) in the final in-use testing regulations will contain language that will better reflect this intent and make explicit the types of parameters that may be subject to the reporting requirements. Specifically, the current language in 86.1920(a)(4)(xii) states:

> Recorded one-hertz test data for all the parameters specified in 40 CFR part 1065, subpart J, including any other relevant parameters electronically sensed, measured, calculated, or otherwise stored by the engine's onboard computer. This also includes any parameters used to modulate the emission-control system.

The final language would state:

> Recorded one-hertz test data for all the parameters specified in 40 CFR part 1065, subpart J, and any other relevant parameters electronically sensed, measured, calculated, or otherwise stored by the engine's onboard computer, including but not limited to engine speed, engine torque, engine coolant temperature, intake manifold temperature, manifold absolute pressure, barometric pressure (altitude),

ambient temperature, brake specific fuel consumption, exhaust temperature upstream of aftertreatment, and elapsed time, any parameter needed to demonstrate the engine is within the NTE or an approved carve-out or deficiency region. The one-hertz test data must also include any parameters used to modulate the emission-control system.

We request comment on this revision.

Similarly, Subpart K of the preamble requests comment on the whether engine manufacturers should be required to design the on-board engine computer to explicitly identify when an engine is operating in an approved NTE carve-out or deficiency. We want to make clear that the request for comment also more broadly covers whether the engine's on-board computer should identify when the engine is operating within the NTE. Under the proposal, manufacturers are required, at a minimum, to provide information from the engine's on-board computer or some other readily available source that will enable EPA to make these NTE determinations.

4. Importation of nonconforming highway engines and vehicles.

The Agency is proposing revisions to 40 CFR part 85, subpart P regarding the applicable emission standards for imported nonconforming highway vehicles and engines, including light-duty vehicles (passenger cars), light-duty trucks, heavy-duty vehicles, heavy-duty engines, and motorcycles. This proposal clarifies that these nonconforming vehicles and engines are required to meet the emission standards in effect when the vehicle or engine was originally produced, not the emission standards in effect when the vehicle or engine is modified. This approach is consistent with the requirements for light-duty Independent Commercial Importers (ICIs) which have been in effect since 1996 (61 FR 5842, February 14, 1996).

Most of the issues related to this proposal were previously addressed in the 1996 rule. An excerpt from that 1996 rule provides the a brief summary of the basis for this proposal. Section I.A of the 1996 final rule reads in part:

> As proposed, EPA is eliminating the requirement that nonconforming light-duty vehicles and Light-duty trucks imported pursuant to 40 CFR 85.1501 or 85.1509 meet the part 86 emission standards in effect at the time of modification. These vehicles, with a few exceptions, will instead be required to meet emission standards (with applicable deterioration factors applied) that were in effect at the time of original vehicle production, using currently applicable testing procedures.
>
> The specific standards applicable to these vehicles are contained in a new §85.1515....
>
> As discussed in the proposal (Supplementary Document pp. 27-28, Docket No. A-89-20), when EPA promulgated the prior requirement to meet standards applicable at the time of modification, the Agency had no data or evidence suggesting that older vehicles could not be modified to meet current year emission standards. Since that rulemaking, EPA has obtained evidence suggesting that many older vehicles cannot be modified to meet current year standards without extraordinary cost, which makes the conversion financially unfeasible for many owners of such vehicles. Today's rule would give owners of older vehicles a way to import their vehicles. In addition, it would have been significantly more difficult and costly for importers to modify vehicles to comply with the current model year standards beginning in January, 1996, when the standards applicable to small volume manufacturers became substantially more stringent. EPA agrees with the statements submitted by ICIs after the close of the comment period that the expense of such modifications would have a serious deleterious effect on their businesses and would not justify the costs.

Although the intent of the 1996 rule was clear, we are proposing to make regulation changes to make the regulation language consistent with the intent of the 1996 rule. The 1996 final rule added 40 CFR 85.1515, which provided a list of the emission standards applicable to imported light-duty vehicles and light-duty trucks based on the original production (OP) year of the vehicle. Tables 1 and 2 in 40 CFR 85.1515 correctly indicate that the emission standards applicable for pre-1994 imported light-duty vehicles and light-duty trucks are based on the original production year of the vehicle. Tables 1 and 2 also correctly indicate (in a footnote) that 1994 and later imported light-duty vehicles and light-duty trucks are required to meet the applicable emission standards as "Specified in 40 CFR part 86 for the OP year of the vehicle, per 85.1515(c)." However §85.1515(c)(1) incorrectly indicates that "Nonconforming motor vehicles or motor

vehicle engines of 1994 OP model year and later conditionally imported pursuant to §85.1505 or §85.1509 shall meet all of the emission standards specified in 40 CFR part 86 for the model year in which the motor vehicle or motor vehicle engine is modified." (emphasis added)

This ambiguity in the regulations was unfortunately not corrected after the 1996 rule changes became effective. Nor was it corrected when Interim non-Tier 2 and Tier 2 requirements were adopted for import vehicles (65 FR 6698, February 10, 2000). Although the 2000 rulemaking did not intend to change the highway engine or vehicle importation process, the regulations continued to indicate that nonconforming motor vehicles and motor vehicle engines must meet the emission standards in the model year in which the motor vehicle or motor vehicle engine is modified; see 40 CFR 85.1515(c)(2)(ii) through (d). We have now received several petitions from light duty ICIs to correct the regulations to permit vehicles imported by ICIs to meet OP year standards.

In summary, for the reasons discussed in the provisions of 61 FR 5842, February 14, 1996, we are proposing changes to correct the regulations for nonconforming highway vehicles so they are consistent with the intent of the 1996 final rule. This proposal will require imported highway vehicles to meet the emission standards in effect the year the vehicle was originally produced, not the emission standards in effect in the year the vehicle or engine is modified. We are, however, concerned that ICI provisions which apply OP year standards could be used as a way to circumvent our Tier 2 light duty standards and our new more stringent motorcycle standards. Thus we are proposing to cap each ICI's annual production of vehicles meeting OP year standards when OP year standards are less stringent than the standards that apply during the year of modification. We are proposing a cap of a total of 50 light duty vehicles and trucks and 50 motorcycles. This does not impact the number of vehicles an ICI may produce that are certified to the standards that apply during the year of modification.

While we have never had an ICI for highway HDEs, we are also proposing, consistent with the above, to make clear that the applicable standards for HDEs imported by an ICI would be those of the year of original production. For HDEs, we are proposing an annual cap of five on an ICI's production of engines certified to OP year standards that are less stringent than those that apply during the year of modification. This will address the possibility that ICIs could provide an avenue by which truck purchasers could avoid the additional costs of new trucks with engines meeting aftertreatment-based engine standards. We are proposing a similar amendment for nonroad diesel engines, as described elsewhere in this document.

We believe it is appropriate to have different caps on the quantity of vehicles and engines that can be certified to OP year standards, where OP year standards are less stringent than those that apply during the year of modification. The sales of light-duty vehicles and trucks are many times greater than those of heavy-duty highway engines and nonroad diesel engines combined. Further, we believe that the caps for light-duty vehicles light-duty trucks, and motorcycles should be larger than those for nonroad and highway engines to accommodate an industry that has grown up around the light-duty ICI program. The light-duty and motorcycle ICIs can provide additional consumer choice and also provide an avenue by which (for a price) someone who has lived outside of the United States, including returning U.S. military personnel, can bring a used personal vehicle they acquired overseas into conformity with U.S. emission requirements. No such ICI industry exists for highway or nonroad engines. Where OP year standards are applied to highway and nonroad engines, we are proposing a lower cap. We believe it will be appropriate to limit the activities of engine ICIs, when previous model year engines are involved, to those specialized trucks or pieces of equipment for which demand is so low that normal certification didn't occur or might not occur. While we want to provide an opportunity for the

importation of highly specialized vehicles or equipment that might otherwise be unavailable in the United States, we do not want to develop an industry that simply provides older equipment that would most likely be built with engines meeting significantly less stringent standards.

5. Revisions and corrections to dynamometer driving schedules.

a. SC03 and US06 driving cycles

This rule proposes to correct errors in the SC03 driving cycle and to reconcile several discrepancies between the CFR language and the second-by-second US06 and SC03 drive cycle traces in the appendices to part 86.

The SC03 cycle in Appendix I, paragraph (h) is proposed to be lengthened to 600 seconds by the addition of six seconds of zero miles per hour after 594 seconds. This change and additional language changes would eliminate confusion in how to execute the requirements in sections 86.160-00(c)(12) and 86.159-00(f)(2)(ix). Sections 86.159-00(f)(2)(ix) and 86.160-00(c)(12) both state that the engine is turned off 2 seconds after the end of the deceleration (which occurs at 594 seconds and driving stops at 596 seconds.)

With respect to the SC03 drive trace, section 86.160-00(c)(10) reads “Twenty seconds after the engine starts, begin the initial vehicle acceleration of the driving schedule.” However, this is incorrect. The printed driving schedule in Appendix I, paragraph (h), correctly shows eighteen seconds of idle. The regulatory language is proposed to be modified to reflect eighteen seconds of idle, rather than twenty.

Section 86.160-00(c)(12) currently reads “Turn the engine off 2 seconds after the end of the last deceleration,” but the Appendix I, paragraph (h), drive schedule has no idle seconds at the end of the SC03 cycle. Idle speed values are proposed to be added to the end of the SC03 drive schedule to make it consistent with the regulatory language. The impact of these changes would clarify that the first non-zero speed value to be at trace time t=19 seconds. This section is proposed to be amended to clarify that driving stops at trace time t=596 seconds.

The US06 drive schedule has a similar discrepancy. Section 86.159-00(f)(2)(ix) reads "Turn the engine off 2 seconds after the end of the last deceleration." However, the drive schedule in Appendix I (g) has six idle seconds at the end of the US06 cycle. We proposed to amend this section to clarify that driving stops at trace time t=596 seconds.

b. Urban Dynamometer Driving Schedule

We are also proposing to take action to correct two minor errors in the Appendix I, paragraph (a), Urban Dynamometer Driving Schedule (UDDS) that have existed since the 1970’s. Originally published in the Federal Register on November 10, 1970 (35 FR 17311), the UDDS is the driving cycle that is the basis of the Federal Test Procedure. Since it was published, however, two speed values in the UDDS were erroneously modified. Specifically, the speed value at t=961 seconds was changed from 5.3 mph to 5.0 mph in 1972, and the speed value at t=1345 seconds was changed from 18.3 mph to 18.8 sometime between 1973 and 1977. The speed value of 5.0 mph at t=961 creates an acceleration of 3.6 mph/sec to 8.6 mph at t=962, which is inconsistent with the acknowledged 3.3 mph/sec maximum acceleration rate due to dynamometer limitations. The speed value of 18.8 mph at t=1345 is inconsistent with what should be a gradually decreasing acceleration rate from t=1343 to t=1347 seconds. This rule proposes to revert these values back to the speed values as they were published in 1970. It is important to note that the regulated industry and EPA have been using the correct speed values since 1970, despite the error in the Code of Federal Regulations (CFR).

In addition, a dynamometer manufacturer commented to EPA that the CFR has several errors in the Appendix I, paragraph (b), version of the UDDS that is expressed in kilometers per hour. EPA has verified that these errors are not rounding errors when converting from miles per hour, but are more likely the result of errors in typing. The table below indicates the correct mile per hour and kilometer per hour values, as well as the incorrect value. This rule proposes to make these corrections.

Time (seconds)	Incorrect KPH	Correct KPH	Correct MPH
363	52.3	52.8	32.8
405	14.5	14.8	9.2
453	31	31.9	19.8
491	55.8	55.5	34.5
577	21.4	27.4	17.0
662	43.9	42.0	26.1
663	43.1	42.2	26.2
664	42.3	42.2	26.2
932	40.3	40.2	25.0

III. Public Participation

We request comment on all aspects of this proposal. The comment period for this rule will end on October 29, 2004.

We will hold an informal public workshop on October 1, 2004 at the National Vehicle and Fuel Emissions Laboratory, which is located at 2000 Traverwood Drive, Ann Arbor, Michigan 48105. The workshop will start at 9:00 am with an opportunity for any individuals to raise questions or comments related to the proposed technical amendments. Following this, the rest of the day will be devoted to discussions of the proposed changes to the test procedures in 40 CFR part 1065.

If you would like a public hearing in addition to the planned workshop, contact us by September 20, 2004 as described above in "DATES." If a public hearing is requested, we will hold it on September 27, 2004 starting at 9:00 am EDT. Contact us for updated information about the possibility of a public hearing.

If you would like to present testimony at a public hearing, we ask that you notify the contact person listed above at least ten days beforehand. You should estimate the time you will need for your presentation and identify any needed audio/visual equipment. We suggest that you bring copies of your statement or other material for the EPA panel and the audience. It would also be helpful if you send us a copy of your statement or other materials before the hearing.

We will arrange for a written transcript of the hearing and keep the official record of the hearing open for 30 days to allow you to submit supplementary information. You may make arrangements for copies of the transcript directly with the court reporter.

IV. Statutory and Executive Order Reviews

A. Executive Order 12866: Regulatory Planning and Review

Under Executive Order 12866 the Agency must determine whether the regulatory action is "significant" and therefore subject to review by the Office of Management and Budget (OMB) and the requirements of this Executive Order. The Executive Order defines a "significant regulatory action" as any regulatory action that is likely to result in a rule that may:

- Have an annual effect on the economy of $100 million or more or adversely affect in a material way the economy, a sector of the economy, productivity, competition, jobs, the environment, public health or safety, or State, Local, or Tribal governments or communities;
- Create a serious inconsistency or otherwise interfere with an action taken or planned by another agency;
- Materially alter the budgetary impact of entitlements, grants, user fees, or loan programs, or the rights and obligations of recipients thereof; or
- Raise novel legal or policy issues arising out of legal mandates, the President's priorities, or the principles set forth in the Executive Order.

Because the rule merely revises the measurement methods and makes a variety of technical amendments to existing programs, it is not a significant regulatory action and is not subject to the requirements of Executive Order 12866. Any new costs associated with this rule will be minimal. In addition, some of the changes will substantially reduce the burden associated with testing, as described in the Regulatory Support Document.

B. Paperwork Reduction Act

This rule does not include any new collection requirements, as it merely revises the measurement methods and makes a variety of technical amendments to existing programs.

C. Regulatory Flexibility Act

The Regulatory Flexibility Act (RFA) generally requires an agency to prepare a regulatory flexibility analysis of any rule subject to notice and comment rulemaking requirements under the Administrative Procedure Act or any other statute unless the agency certifies that the rule will not have a significant economic impact on a substantial number of small entities. Small entities include small businesses, small organizations, and small governmental jurisdictions.

For purposes of assessing the impacts of this final rule on small entities, a small entity is defined as: (1) A small business as defined by the Small Business Administration (SBA) by category of business using North America Industrial Classification System (NAICS) and codified at 13 CFR 121.201; (2) a small governmental jurisdiction that is a government of a city, county, town, school district or special district with a population of less than 50,000; and (3) a small organization that is any not-for-profit enterprise which is independently owned and operated and is not dominant in its field.

After considering the economic impacts of today's proposed rule on small entities, I certify that this action will not have a significant economic impact on a substantial number of small entities. The small entities directly regulated by this proposed rule are small businesses that produce nonroad engines. We have determined that no small entities will experience more than incidental costs as a result of this rule. This rule merely revises the measurement methods and makes a variety of technical amendments to existing programs. This proposed rule, therefore, does not require a regulatory flexibility analysis.

Although this proposed rule will not have a significant economic impact on a substantial number of small entities, EPA nonetheless has tried to reduce the impact of this rule on small entities. For example, most of the proposed changes clarify existing requirements, which will reduce the time needed to comply, and added flexibility, which may allow for a simpler effort to comply.

We continue to be interested in the potential impacts of the proposed rule on small entities and welcome comments on issues related to such impacts.

D. Unfunded Mandates Reform Act

Title II of the Unfunded Mandates Reform Act of 1995 (UMRA), Public Law. 104-4, establishes requirements for federal agencies to assess the effects of their regulatory actions on state, local, and tribal governments and the private sector. Under section 202 of the UMRA, EPA generally must prepare a written statement, including a cost-benefit analysis, for proposed and final rules with "federal mandates" that may result in expenditures to state, local, and tribal governments, in the aggregate, or to the private sector, of $100 million or more in any one year. Before promulgating an EPA rule for which a written statement is needed, section 205 of the UMRA generally requires EPA to identify and consider a reasonable number of regulatory alternatives and adopt the least costly, most cost-effective, or least burdensome alternative that achieves the objectives of the rule. The provisions of section 205 do not apply when they are inconsistent with applicable law. Moreover, section 205 allows EPA to adopt an alternative other than the least costly, most cost-effective, or least burdensome alternative if the Administrator publishes with the final rule an explanation of why that alternative was not adopted.

Before EPA establishes any regulatory requirements that may significantly or uniquely affect small governments, including tribal governments, it must have developed under section 203 of the UMRA a small government agency plan. The plan must provide for notifying potentially affected small governments, enabling officials of affected small governments to have meaningful and timely input in the development of EPA regulatory proposals with significant federal intergovernmental mandates, and informing, educating, and advising small governments on compliance with the regulatory requirements.

This rule contains no federal mandates for state, local, or tribal governments as defined by the provisions of Title II of the UMRA. The rule imposes no enforceable duties on any of these governmental entities. Nothing in the rule would significantly or uniquely affect small governments. We have determined that this rule contains no federal mandates that may result in expenditures of more than $100 million to the private sector in any single year. This rule merely revises the measurement methods and makes a variety of technical amendments to existing programs. The requirements of UMRA therefore do not apply to this action.

E. Executive Order 13132: Federalism

Executive Order 13132, entitled “Federalism” (64 FR 43255, August 10, 1999), requires EPA to develop an accountable process to ensure “meaningful and timely input by State and local officials in the development of regulatory policies that have federalism implications.” “Policies that have federalism implications” is defined in the Executive Order to include regulations that have “substantial direct effects on the States, on the relationship between the national government and the States, or on the distribution of power and responsibilities among the various levels of government.”

Under Section 6 of Executive Order 13132, EPA may not issue a regulation that has federalism implications, that

imposes substantial direct compliance costs, and that is not required by statute, unless the Federal government provides the funds necessary to pay the direct compliance costs incurred by State and local governments, or EPA consults with State and local officials early in the process of developing the proposed regulation. EPA also may not issue a regulation that has federalism implications and that preempts State law, unless the Agency consults with State and local officials early in the process of developing the proposed regulation.

Section 4 of the Executive Order contains additional requirements for rules that preempt State or local law, even if those rules do not have federalism implications (i.e., the rules will not have substantial direct effects on the States, on the relationship between the national government and the states, or on the distribution of power and responsibilities among the various levels of government). Those requirements include providing all affected State and local officials notice and an opportunity for appropriate participation in the development of the regulation. If the preemption is not based on express or implied statutory authority, EPA also must consult, to the extent practicable, with appropriate State and local officials regarding the conflict between State law and Federally protected interests within the agency's area of regulatory responsibility.

This proposed rule does not have federalism implications. It will not have substantial direct effects on the States, on the relationship between the national government and the States, or on the distribution of power and responsibilities among the various levels of government, as specified in Executive Order 13132.

F. Executive Order 13175: Consultation and Coordination With Indian Tribal Governments

Executive Order 13175, entitled "Consultation and Coordination with Indian Tribal Governments" (65 FR 67249, November 6, 2000), requires EPA to develop an accountable process to ensure "meaningful and timely input by tribal officials in the development of regulatory policies that have tribal implications."

This rule does not have tribal implications as specified in Executive Order 13175. This rule will be implemented at the Federal level and impose compliance costs only on engine manufacturers and ship builders. Tribal governments will be affected only to the extent they purchase and use equipment with regulated engines. Thus, Executive Order 13175 does not apply to this rule.

G. Executive Order 13045: Protection of Children from Environmental Health and Safety Risks

Executive Order 13045, "Protection of Children from Environmental Health Risks and Safety Risks" (62 FR 19885, April 23, 1997) applies to any rule that (1) is determined to be "economically significant" as defined under Executive Order 12866, and (2) concerns an environmental health or safety risk that EPA has reason to believe may have a disproportionate effect on children. If the regulatory action meets both criteria, Section 5-501 of the Order directs the Agency to evaluate the environmental health or safety effects of the planned rule on children, and explain why the planned regulation is preferable to other potentially effective and reasonably feasible alternatives considered by the Agency.

This proposed rule is not subject to the Executive Order because it does not involve decisions on environmental health or safety risks that may disproportionately affect children.

H. Executive Order 13211: Actions that Significantly Affect Energy Supply, Distribution, or Use

This rule is not a "significant energy action" as defined in Executive Order 13211, "Actions Concerning Regulations That Significantly Affect Energy Supply, Distribution, or Use" (66 FR 28355 (May 22, 2001)), because it is not likely to have a significant effect on the supply, distribution, or use of energy.

I. National Technology Transfer Advancement Act

Section 12(d) of the National Technology Transfer and Advancement Act of 1995 ("NTTAA"), Public Law 104-113, section 12(d) (15 U.S.C. 272 note) directs EPA to use voluntary consensus standards in its regulatory activities unless doing so would be inconsistent with applicable law or otherwise impractical. Voluntary consensus standards are technical standards (e.g., materials specifications, test methods, sampling procedures, and business practices) that are developed or adopted by voluntary consensus standards bodies. NTTAA directs EPA to provide Congress, through OMB, explanations when the Agency decides not to use available and applicable voluntary consensus standards.

This proposed rule involves technical standards. The International Organization for Standardization (ISO) has a voluntary consensus standard that can be used to test engines. However, the test procedures in this proposal reflect a level of development that goes substantially beyond the ISO or other published procedures. The proposed procedures incorporate new specifications for transient emission measurements, measuring PM emissions at very low levels, measuring emissions using field-testing procedures. The procedures we adopt in this rule will form the working template for ISO and national and state governments to define test procedures for measuring engine emissions. As such, we have worked extensively with the representatives of other governments, testing organizations, and the affected industries.

EPA welcomes comments on this aspect of the proposed rulemaking.

V. Statutory Provisions and Legal Authority

Statutory authority for the engine controls proposed today can be found in 42 U.S.C. 7401 - 7671q.

List of Subjects

40 CFR Part 85

Confidential business information, Imports, Labeling, Motor vehicle pollution, Reporting and recordkeeping requirements, Research, Warranties.

40 CFR Part 86

Administrative practice and procedure, Confidential business information, Labeling, Motor vehicle pollution, Reporting and recordkeeping requirements.

40 CFR Part 89

Environmental protection, Administrative practice and procedure, Confidential business information, Imports, Labeling, Motor vehicle pollution, Reporting and recordkeeping requirements, Research, Vessels, Warranties.

40 CFR Part 90

Environmental protection, Administrative practice and procedure, Air pollution control, Confidential business information, Imports, Labeling, Reporting and recordkeeping requirements, Research, Warranties.

40 CFR Part 91

Environmental protection, Administrative practice and procedure, Air pollution control, Confidential business information, Imports, Labeling, Penalties, Reporting and recordkeeping requirements, Warranties

40 CFR Part 92

Administrative practice and procedure, Air pollution control, Confidential business information, Imports, Labeling, Railroads, Reporting and recordkeeping requirements, Warranties

40 CFR Part 94

Environmental protection, Administrative practice and procedure, Air pollution control, Confidential business information, Imports, Incorporation by reference, Penalties, Reporting and recordkeeping requirements, Vessels, Warranties.

40 CFR Part 1039, 1048, and 1051

Environmental protection, Administrative practice and procedure, Air pollution control, Confidential business information, Imports, Incorporation by reference, Labeling, Penalties, Reporting and recordkeeping requirements, Warranties.

40 CFR Part 1065

Environmental protection, Administrative practice and procedure, Incorporation by reference, Reporting and recordkeeping requirements, Research.

40 CFR Part 1068

Environmental protection, Administrative practice and procedure, Confidential business information, Imports, Motor vehicle pollution, Penalties, Reporting and recordkeeping requirements, Warranties.

Dated:

ORIGINAL SIGNED BY MICHAEL LEAVITT,
AUGUST 16, 2004

_____

Michael O. Leavitt,
Administrator.

The EPA Administrator signed the following proposed rule on August 16, 2004. It is being submitted for publication in the *Federal Register*. While EPA has taken steps to ensure the accuracy of this Internet version of the rule, it is not the official version of the rule for purposes of public comment. Please refer to the official version in a forthcoming *Federal Register* publication and on GPO's Web Site. The rule will likely be published in the *Federal Register* by early September 2004. You can access the *Federal Register* at: http://www.access.gpo.gov/su_docs/aces/aces140.html. When using this site, note that "text" files may be incomplete because they don't include graphics. Instead, select "Adobe Portable Document File" (PDF) files.

For the reasons set out in the preamble, title 40, chapter I of the Code of Federal Regulations is proposed to be amended as set forth below.

PART 85—CONTROL OF AIR POLLUTION FROM MOBILE SOURCES

1. The authority citation for part 85 continues to read as follows:
Authority: 42 U.S.C. 7401 - 7671q.

2. Section 85.1502 is amended by revising paragraph (a)(14) to read as follows:

§85.1502 Definitions.

* * * * *

(a) * * *

(14) United States. United States includes the States, the District of Columbia, the Commonwealth of Puerto Rico, the Commonwealth of the Northern Mariana Islands, Guam, American Samoa, and the U.S. Virgin Islands.

* * * * *

3. Section 85.1503 is amended by revising the section heading and adding paragraphs (c), (d), and (e) to read as follows:

§85.1503 General requirements for importation of nonconforming vehicles and engines.

* * * * *

(c) In any one certificate year (e.g., the current model year), an ICI may finally admit no more than the following numbers of nonconforming vehicles or engines into the United States under the provisions of §86.1505 and §86.1509, except as allowed by paragraph (e) of this section:

(1) 5 heavy-duty engines.

(2) A total of 50 light-duty vehicles, light-duty trucks, and medium-duty passenger vehicles.

(3) 50 highway motorcycles.

(d) For ICIs owned by a parent company, the importation limits in paragraph (c) of this section include importation by the parent company and all its subsidiaries.

(e) An ICI may exceed the limits outlined in paragraph 85.1503(c) and (d) above, provided that any vehicles/engines in excess of the limits meet the emission standards and other requirements outlined in the provisions of §85.1515 for the model year in which the motor vehicle/engine is modified (instead of the emission standards and other requirements applicable for the OP year of the vehicle/engine).

4. Section 85.1513 is amended by revising paragraph (d) to read as follows:

§85.1513 Prohibited acts; penalties.

* * * * *

(d) Any importer who violates section 203(a)(1) of the Act is subject to a civil penalty under section 205 of the Act of not more than $32,500 for each vehicle or engine subject to the violation. In addition to the penalty provided in the Act, where applicable, under the exemption provisions of §85.1511(b), or under §85.1512, any person or entity who fails to deliver such vehicle or engine to the U.S. Customs Service is liable for liquidated damages in the amount of the bond required by applicable Customs laws and regulations.

* * * * *

5. Section 85.1515 is amended by revising paragraphs (c)(1) and (c)(2) to read as follows:

§85.1515 Emission standards and test procedures applicable to imported nonconforming motor vehicles and motor vehicle engines.

* * * * *

(c)(1) Nonconforming motor vehicles or motor vehicle engines of 1994 OP model year and later conditionally imported pursuant to §85.1505 or §85.1509 shall meet all of the emission standards specified in 40 CFR Part 86 for the OP year of the vehicle or motor vehicle engine. At the option of the ICI, the nonconforming motor vehicle may comply with the emissions standards in 40 CFR 86.1708-99 or 86.1709-99, as applicable to a light-duty vehicle or light light-duty truck, in lieu of the otherwise applicable emissions standards specified in 40 CFR Part 86 for the OP year of the vehicle. The provisions of 40 CFR 86.1710-99 do not apply to imported nonconforming motor vehicles. The useful life specified in 40 CFR part 86 for the OP year of the motor vehicle or motor vehicle engine is applicable where useful life is not designated in this subpart.

(2)(i) Nonconforming light-duty vehicles and light light-duty trucks (LDV/LLDTs) originally manufactured in OP years 2004, 2005 or 2006 must meet the FTP exhaust emission standards of bin 9 in Tables S04-1 and S04-2 in 40 CFR 86.1811-04 and the evaporative emission standards for light-duty vehicles and light light-duty trucks specified in 40 CFR 86.1811-01(e)(5).

(ii) Nonconforming LDT3s and LDT4s (HLDTs) and medium-duty passenger vehicles (MDPVs) originally manufactured in OP years 2004 through 2006 must meet the FTP exhaust emission standards of bin 10 in Tables S04-1 and S04-2 in 40 CFR 86.1811-04 and the applicable evaporative emission standards specified in 40 CFR 86.1811-04(e)(5). For 2004 OP year HLDTs and MDPVs where modifications commence on the first vehicle of a test group before December 21, 2003, this requirement does not apply to the 2004 OP year. ICIs opting to bring all of their 2004 OP year HLDTs and MDPVs into compliance with the exhaust emission standards of bin 10 in Tables S04-1 and S04-2 in 40 CFR 86.1811-04 , may use the optional higher NMOG values for their 2004-2006 OP year LDT2s and 2004-2008 LDT4s.

(iii) Nonconforming LDT3s and LDT4s (HLDTs) and medium-duty passenger vehicles (MDPVs) originally manufactured in OP years 2007 and 2008 must meet the FTP exhaust emission standards of bin 8 in Tables S04-1 and S04-2 in 40 CFR 86.1811-04 and the applicable evaporative standards specified in 40 CFR 86.1811-04(e)(5).

(iv) Nonconforming LDV/LDTs originally manufactured in OP years 2007 and later and nonconforming HLDTs and MDPVs originally manufactured in OP years 2009 and later must meet the FTP exhaust emission standards of bin 5 in Tables S04-1 and S04-2 in 40 CFR 86.1811-04, and the evaporative standards specified in 40 CFR 86.1811(e)(1) through (e)(4).

(v) ICIs are exempt from the Tier 2 and the interim non-Tier2 phase-in intermediate percentage requirements for exhaust, evaporative, and refueling emissions described in 40 CFR 86.1811-04.

(vi) In cases where multiple standards exist in a given model year in 40 CFR part 86 due to phase-in requirements of new standards, the applicable standards for motor vehicle engines required to be certified to engine-based standards are the least stringent standards applicable to the engine type for the OP year.

* * * * *

6. Section 85.2111 is amended by revising the introductory text and adding paragraph (d) to read as follows:

§85.2111 Warranty enforcement.

The following acts are prohibited and may subject a manufacturer to up to a $32,500 civil penalty for each offense, except as noted in paragraph (d) of this section:

* * * * *

(d) The maximum penalty value listed in this section is shown for calendar year 2004. Maximum penalty limits for later years may be adjusted based on the Consumer Price Index. The specific regulatory provisions for changing the maximum penalties, published in 40 CFR part 19, reference the applicable U.S. Code citation on which the prohibited action is based.

7. Appendix II to subpart V is amended by revising section 1 of part A to read as follows:

Appendix II to Subpart V of Part 85—Arbitration Rules

Part A—Pre-Hearing

Section 1: Initiation of Arbitration

Either party may commence an arbitration under these rules by filing at any regional office of the American Arbitration Association (the AAA) three copies of a written submission to arbitrate under these rules, signed by either party. It shall contain a statement of the matter in dispute, the amount of money involved, the remedy sought, and the hearing locale requested, together with the appropriate administrative fee as provided in the Administrative Fee Schedule of the AAA in effect at the time the arbitration is filed. The filing party shall notify the MOD Director in writing within 14 days of when it files for arbitration and provide the MOD Director with the date of receipt of the bill by the part manufacturer.

Unless the AAA in its discretion determines otherwise and no party disagrees, the Expedited Procedures (as described in Part E of these Rules) shall be applied in any case where no disclosed claim or counterclaim exceeds $32,500, exclusive of interest and arbitration costs. Parties may also agree to the Expedited Procedures in cases involving claims in excess of $32,500.

All other cases, including those involving claims not in excess of $32,500 where either party so desires, shall be administered in accordance with Parts A through D of these Rules.

PART 86—CONTROL OF EMISSIONS FROM NEW AND IN-USE HIGHWAY VEHICLES AND ENGINES

8. The authority citation for part 86 continues to read as follows:

Authority: 42 U.S.C. 7401-7671q.

9. Section 86.004-16 is amended by revising paragraph (d) to read as follows:

§86.004-16 Prohibition of defeat devices.

* * * * *

(d) For vehicle and engine designs designated by the Administrator to be investigated for possible defeat devices:

(1) General. The manufacturer must show to the satisfaction of the Administrator that the vehicle or engine design does not incorporate strategies that reduce emission control effectiveness exhibited during the applicable Federal emissions test procedures when the vehicle or engine is operated under conditions which may reasonably be expected to be encountered in normal operation and use, unless one of the specific exceptions set forth in the definition of "defeat device" in Sec. 86.004-2 has been met.

(2) Information submissions required. The manufacturer will provide an explanation containing detailed information (including information which the Administrator may request to be submitted) regarding test programs, engineering evaluations, design specifications, calibrations, on-board computer algorithms, and design strategies incorporated for operation both during and outside of the applicable Federal emission test

procedure.

10. Section 86.004-26 is amended by revising paragraph (c)(4) to read as follows:

§86.004-26 Mileage and service accumulation; emission measurements.

* * * * *

(c) * * *

(4) The manufacturer shall determine, for each engine family, the number of hours at which the engine system combination is stabilized for emission-data testing. The manufacturer shall maintain, and provide to the Administrator if requested, a record of the rationale used in making this determination. The manufacturer may elect to accumulate 125 hours on each test engine within an engine family without making a determination. Any engine used to represent emission-data engine selections under Sec. 86.094-24(b)(2) shall be equipped with an engine system combination that has accumulated at least the number of hours determined under this paragraph. Complete exhaust emission tests shall be conducted for each emission-data engine selection under Sec. 86.094-24(b)(2). Evaporative emission controls must be connected, as described in 40 CFR 1065, subpart F. The Administrator may determine under Sec. 86.094-24(f) that no testing is required.

* * * * *

11. Section 86.007-11 is amended by revising paragraphs (a)(2) and (a)(3)(i) and adding paragraph (g)(6) to read as follows:

§86.007-11 Emission standards and supplemental requirements for 2007 and later model year heavy-duty engines and vehicles.

* * * * *

(a) * * *

(2) The standards set forth in paragraph (a)(1) of this section refer to the exhaust emitted over the duty cycle specified in paragraphs (a)(2)(i) through (iii) of this section, where exhaust emissions are measured and calculated as specified in paragraphs (a)(2)(iv) and (v) of this section in accordance with the procedures set forth in 40 CFR part 1065, except as noted in §86.007-23(c)(2):

(i) Perform the test interval set forth in paragraph (f)(2) of Appendix I of this part with a cold-start according to 40 CFR part 1065, subpart F. This is the cold-start test interval.

(ii) Shut down the engine after completing the test interval and allow 20 minutes to elapse. This is the hot-soak.

(iii) Repeat the test interval. This is the hot-start test interval.

(iv) Calculate the total emission mass of each constituent, *m,* and the total work, *W*, over each test interval according to 40 CFR 1065.650.

(v) Determine your engine's brake-specific emissions using the following calculation, which weights the emissions from the cold-start and hot-start test intervals:

$$brake-specific\ emissions = \frac{m_{cold-start} + 6 \bullet m_{hot-start}}{W_{cold-start} + 6 \bullet W_{hot-start}}$$

(3) * * *

(i) Exhaust emissions, as determined under §86.1360-2007(b) pertaining to the supplemental emission test cycle, for each regulated pollutant shall not exceed 1.0 times the applicable emission standards or FELs specified in paragraph (a)(1) of this section.

* * * * *

(g) * * *

(6) Manufacturers may determine the number of engines and vehicles that are allowed to certify to the NOx plus NMHC standard in §86.004-11 based on calendar years 2007, 2008, and 2009, rather than model years

2007, 2008, and 2009.

* * * * *

12. Section 86.007-21 is amended by revising paragraph (o) to read as follows:

§86.007-21 Application for certification.

*****

(o) For diesel heavy-duty engines, the manufacturer must provide the following additional information pertaining to the supplemental emission test conducted under Sec. 86.1360-2007:

(1) Weighted brake-specific emissions data (i.e., in units of g/bhp-hr), calculated according to 40 CFR 1065.650 for all pollutants for which an emission standard is established in Sec. 86.004-11(a) or subsequent sections;

(2) For engines subject to the MAEL (see §86.007-11(a)(3)(ii)), brake specific gaseous emission data for each of the 12 non-idle test points (identified under Sec. 86.1360-2007(b)(1)) and the 3 EPA-selected test points (identified under Sec. 86.1360-2007(b)(2));

(3) For engines subject to the MAEL (see §86.007-11(a)(3)(ii)), concentrations and mass flow rates of all regulated gaseous emissions plus carbon dioxide;

(4) Values of all emission-related engine control variables at each test point;

(5) Weighted break-specific particulate matter (i.e., in units of g/bhp-hr);

(6) A statement that the test results correspond to the test engine selection criteria in 40 CFR 1065.401. The manufacturer also must maintain records at the manufacturer's facility which contain all test data, engineering analyses, and other information which provides the basis for this statement, where such information exists. The manufacturer must provide such information to the Administrator upon request;

(7) For engines subject to the MAEL (see §86.007-11(a)(3)(ii)), a statement that the engines will comply with the weighted average emissions standard and interpolated values comply with the Maximum Allowable Emission Limits specified in Sec. 86.007-11(a)(3) for the useful life of the engine where applicable. The manufacturer also must maintain records at the manufacturer's facility which contain a detailed description of all test data, engineering analyses, and other information which provides the basis for this statement, where such information exists. The manufacturer must provide such information to the Administrator upon request.

* * * * *

13. Part 86 is amended by removing the first §86.008-10, which was added on October 6, 2000.

14. Section 86.084-2 is amended by revising the definition for “Curb-idle” to read as follows:

§86.084-2 Definitions.

* * * * *

Curb-idle means:

(1) For manual transmission code light-duty trucks, the engine speed with the transmission in neutral or with the clutch disengaged and with the air conditioning system, if present, turned off. For automatic transmission code light-duty trucks, curb-idle means the engine speed with the automatic transmission in the Park position (or Neutral position if there is no Park position), and with the air conditioning system, if present, turned off.

(2) For manual transmission code heavy-duty engines, the manufacturer's recommended engine speed with the clutch disengaged. For automatic transmission code heavy-duty engines, curb idle means the manufacturer's recommended engine speed with the automatic transmission in gear and the output shaft stalled. (Measured idle speed may be used in lieu of curb-idle speed for the emission tests when the difference between measured idle speed and curb idle speed is sufficient to cause a void test under 40 CFR 1065.530 but not sufficient to permit adjustment in accordance with 40 CFR part 1065, subpart E.

* * * * *

15. Section 86.096-38 is amended by revising paragraph (g)(19)(iii) to read as follows:

§86.096-38 Maintenance instructions.

* * * * *

(g) * * *

(19) * * *

(iii) Any person who violates a provision of this paragraph (g) shall be subject to a civil penalty of not more than $32,500 per day for each violation. This maximum penalty is shown for calendar year 2004. Maximum penalty limits for later years may be set higher based on the Consumer Price Index, as specified in 40 CFR part 19. In addition, such person shall be liable for all other remedies set forth in Title II of the Clean Air Act, remedies pertaining to provisions of Title II of the Clean Air Act, or other applicable provisions of law.

16. Section 86.121-90 is amended by revising paragraph (d) introductory text to read as follows:

§86.121-90 Hydrocarbon analyzer calibration.

* * * * *

(d) FID response factor to methane. When the FID analyzer is to be used for the analysis of gasoline, diesel, methanol, ethanol, liquefied petroleum gas, and natural gas-fueled vehicle hydrocarbon samples, the methane response factor of the analyzer must be established. To determine the total hydrocarbon FID response to methane, known methane in air concentrations traceable to the National Institute of Standards and Technology (NIST) must be analyzed by the FID. Several methane concentrations must be analyzed by the FID in the range of concentrations in the exhaust sample. The total hydrocarbon FID response to methane is calculated as follows:

r_{CH4}=FIDppm/SAMppm

Where:

* * * * *

17. Section 86.144-94 is amended by revising paragraph (c)(8)(vi) to read as follows:

§86.144-94 Calculations; exhaust emissions.

* * * * *

(c) * * *

(8) * * *

(vi) rCH4=HC FID response to methane as measured in Sec. 86.121(d).

* * * * *

18. Section 86.158-00 is amended by revising the introductory text to read as follows:

§86.158-00 Supplemental Federal Test Procedures; overview.

The procedures described in §§ 86.158-00, 86.159-00, 86.160-00, and 86.162-00 discuss the aggressive driving (US06) and air conditioning (SC03) elements of the Supplemental Federal Test Procedures (SFTP). These test procedures consist of two separable test elements: A sequence of vehicle operation that tests exhaust emissions with a driving schedule (US06) that tests exhaust emissions under high speeds and accelerations (aggressive driving); and a sequence of vehicle operation that tests exhaust emissions with a driving schedule (SC03) which includes the impacts of actual air conditioning operation. These test procedures (and the associated standards set forth in subpart S of this part) are applicable to light-duty vehicles and light-duty trucks.

* * * * *

19. Section 86.159-00 is amended by revising paragraph (f)(2)(ix) to read as follows:

§86.159-00 Exhaust emission test procedure for US06 emissions.

* * * * *

(f) * * *

(2) * * *

(ix) Turn the engine off 2 seconds after the end of the last deceleration (i.e., engine off at 596 seconds).

* * * * *

20. Section 86.160-00 is amended by revising the first sentence of paragraph (a), and paragraphs (c)(10), (c)(12), (d)(10), and (d)(13) to read as follows:

§86.160-00 Exhaust emission test procedure for SC03 emissions.

(a) *Overview*. The dynamometer operation consists of a single, 600 second test on the SC03 driving schedule, as described in appendix I, paragraph (h), of this part. * * *

* * * * *

(c) * * *

(10) Eighteen seconds after the engine starts, begin the initial vehicle acceleration of the driving schedule.

* * * * *

(12) Turn the engine off 2 seconds after the end of the last deceleration (i.e., engine off at 596 seconds).

* * * * *

(d) * * *

(10) Turn the engine off 2 seconds after the end of the last deceleration (i.e., engine off at 596 seconds).

(13) Immediately after the end of the sample period, turn off the cooling fan, disconnect the exhaust tube from the vehicle tailpipe(s), and drive the vehicle from dynamometer.

* * * * *

21. Section 86.161-00 is amended by revising paragraph (b)(1) to read as follows:

§86.161-00 Air conditioning environmental test facility ambient requirements.

* * * * *

(b) * * *

(1) Ambient humidity is controlled, within the test cell, during all phases of the air conditioning test sequence to an average of 100 +/- 5 grains of water/pound of dry air.

* * * * *

22. Section 86.164-00 is amended by revising paragraph (c)(1)(i) to read as follows:

§86.164-00 Supplemental federal test procedure calculations.

* * * * *

(c)(1) * * *

(i) $Y_{WSFTP} = 0.35(Y_{FTP}) + 0.37(Y_{SC03}) + 0.28(Y_{US06})$

Where:

* * * * *

23. A new §86.413-2006 is added to read as follows:

§86.413-2006 Labeling.

(a)(1) The manufacturer of any motorcycle shall, at the time of manufacture, affix a permanent, legible label, of the type and in the manner described below, containing the information hereinafter provided, to all production models of such vehicles available for sale to the public and covered by a certificate of conformity.

(2) A permanent, legible label shall be affixed in a readily accessible position. Multi-part labels may be used.

(3) The label shall be affixed by the vehicle manufacturer who has been issued the certificate of conformity for such vehicle, in such a manner that it cannot be removed without destroying or defacing the label, and shall not be affixed to any part which is easily detached from the vehicle or is likely to be replaced during the useful life of the vehicle.

(4) The label shall contain the following information lettered in the English language in block letters and numerals, which shall be of a color that contrasts with the background of the label:

(i) The label heading shall read: "Vehicle Emission Control Information";

(ii) Full corporate name and trademark of the manufacturer;

(iii) Engine displacement (in cubic centimeters or liters) and engine family identification;

(iv) Engine tuneup specifications and adjustments, as recommended by the manufacturer, including, if applicable: idle speed, ignition timing, and the idle air-fuel mixture setting procedure and value (e.g., idle CO, idle air- fuel ratio, idle speed drop). These specifications shall indicate the proper transmission position during tuneup, and which accessories should be in operation and which systems should be disconnected during a tuneup;

(v) Any specific fuel or engine lubricant requirements (e.g., lead content, research octane number, engine lubricant type);

(vi) Identification of the exhaust emission control system, using abbreviations in accordance with SAE J1930, June 1993, including the following abbreviations for items commonly appearing on motorcycles:

OC	Oxidation catalyst;
TWC	Three-way catalyst;
AIR	Secondary air injection (pump);
PAIR	Pulsed secondary air injection
DFI	Direct fuel injection;
O2S	Oxygen sensor;
HO2S	Heated oxygen sensor;
EM	Engine modification;
CFI	Continuous fuel injection;
MFI	Multi-port (electronic) fuel injection; and
TBI	Throttle body (electronic) fuel injection.

(viii) An unconditional statement of conformity to U.S. EPA regulations which includes the model year; for example, "This Vehicle Conforms to U.S. EPA Regulations Applicable to _____ Model Year New Motorcycles" (the blank is to be filled in with the appropriate model year). For all Class III motorcycles and for Class I and Class II motorcycles demonstrating compliance with the averaging provisions in 40 CFR 86.449 the statement must also include the phrase "is certified to an HC+NOx emission standard of _____ grams/mile" (the blank is to be filled in with the Family Emission Limit determined by the manufacturer).

(b) The provisions of this section shall not prevent a manufacturer from also reciting on the label that such vehicle conforms to any other applicable Federal or State standards for new motorcycles or any other information that such manufacturer deems necessary for, or useful to, the proper operation and satisfactory maintenance of the vehicle.

24. Section 86.447-2006 is revised to read as follows:

§86.447-2006 What provisions apply to motorcycle engines below 50 cc that are certified under the Small SI program or the Recreational-vehicle program?

(a) General provisions. If you are an engine manufacturer, this section allows you to introduce into commerce a new highway motorcycle (that is, a motorcycle that is a motor vehicle) if it has an engine below 50 cc that is already

certified to the requirements that apply to engines or vehicles under 40 CFR part 90 or 1051 for the appropriate model year. If you comply with all the provisions of this section, we consider the certificate issued under 40 CFR part 90 or 1051 for each engine or vehicle to also be a valid certificate of conformity under this part 86 for its model year, without a separate application for certification under the requirements of this part 86. See §86.448-2006 for similar provisions that apply to vehicles that are certified to chassis-based standards under 40 CFR part 1051.

(b) Vehicle-manufacturer provisions. If you are not an engine manufacturer, you may produce highway motorcycles using nonroad engines below 50 cc under this section as long as the engine has been properly labeled as specified in paragraph (d)(5) of this section and you do not make any of the changes described in paragraph (d)(2) of this section. If you modify the nonroad engine in any of the ways described in paragraph (d)(2) of this section for installation in a highway motorcycle, we will consider you a manufacturer of a new highway motorcycle. Such engine modifications prevent you from using the provisions of this section.

(c) Liability. Engines for which you meet the requirements of this section, and vehicles containing these engines, are exempt from all the requirements and prohibitions of this part, except for those specified in this section. Engines and vehicles exempted under this section must meet all the applicable requirements from 40 CFR part 90 or 1051. This applies to engine manufacturers, vehicle manufacturers who use these engines, and all other persons as if these engines were used in recreational vehicles or other nonroad applications. The prohibited acts of 40 CFR part 85 apply to these new highway motorcycles; however, we consider the certificate issued under 40 CFR part 90 or 1051 for each engine to also be a valid certificate of conformity under this part 86 for its model year. If we make a determination that these engines do not conform to the regulations during their useful life, we may require you to recall them under 40 CFR part 86, 90, or 1068.

(d) Specific requirements. If you are an engine manufacturer and meet all the following criteria and requirements regarding your new engine, the highway motorcycle is eligible for an exemption under this section:

(1) Your engine must be below 50 cc and must be covered by a valid certificate of conformity for Class II engines issued under 40 CFR part 90 or for recreational vehicles under 40 CFR part 1051.

(2) You must not make any changes to the certified engine that could reasonably be expected to increase its exhaust emissions for any pollutant, or its evaporative emissions, if applicable. For example, if you make any of the following changes to one of these engines, you do not qualify for this exemption:

(i) Change any fuel system or evaporative system parameters from the certified configuration.

(ii) Change, remove, or fail to properly install any other component, element of design, or calibration specified in the engine manufacturer's application for certification. This includes aftertreatment devices and all related components.

(iii) Modify or design the engine cooling system so that temperatures or heat rejection rates are outside the original engine manufacturer's specified ranges.

(3) You must show that fewer than 50 percent of the engine model's total sales for the model year, from all companies, are used in highway motorcycles, as follows:

(i) If you are the original manufacturer of the engine, base this showing on your sales information.

(ii) In all other cases, you must get the original manufacturer of the engine to confirm this based on its sales information.

(4) You must ensure that the engine has the label we require under 40 CFR part 90 or 1051.

(5) You must add a permanent supplemental label to the engine in a position where it will remain clearly visible after installation in the equipment. In the supplemental label, do the following:

(i) Include the heading: "HIGHWAY MOTORCYCLE ENGINE EMISSION CONTROL INFORMATION".

(ii) Include your full corporate name and trademark. You may instead include the full corporate name and trademark of another company you choose to designate.

(iii) State: "THIS ENGINE WAS ADAPTED FOR HIGHWAY USE WITHOUT AFFECTING ITS EMISSION CONTROLS.".

(iv) State the date you finished installation (month and year), if applicable.

(7) Send the Designated Compliance Officer a signed letter by the end of each calendar year (or less often if we tell you) with all the following information:

(i) Identify your full corporate name, address, and telephone number.

(ii) List the engine models you expect to produce under this exemption in the coming year.

(iii) State: "We produce each listed engine model for nonroad application without making any changes that could increase its certified emission levels, as described in 40 CFR 1048.605.".

(e) Failure to comply. If your highway motorcycles do not meet the criteria listed in paragraph (d) of this section, they will be subject to the standards, requirements, and prohibitions of this part 86 and the certificate issued under 40 CFR part 90 or 1051 will not be deemed to also be a certificate issued under this part 86. Introducing these engines into commerce without a valid exemption or certificate of conformity under this part violates the prohibitions in 40 CFR 85.

(f) Data submission. We may require you to send us emission test data on any applicable nonroad duty cycles.

(g) Participation in averaging, banking and trading. Engines adapted for recreational use under this section may not generate or use emission credits under this part 86. These engines may generate credits under the ABT provisions in 40 CFR part 90 or 1051. These engines must use emission credits under 40 CFR part 90 or 1051 if they are certified to an FEL that exceeds an applicable standard.

25. Section 86.448-2006 is revised to read as follows:

§86.448-2006 What provisions apply to vehicles certified under the Recreational-vehicle program?

(a) General provisions. If you are a highway-motorcycle manufacturer, this section allows you to introduce into commerce a new highway motorcycle with an engine below 50 cc if it is already certified to the requirements that apply to recreational vehicles under 40 CFR parts 1051. A highway motorcycle is a motorcycle that is a motor vehicle. If you comply with all of the provisions of this section, we consider the certificate issued under 40 CFR part 1051 for each recreational vehicle to also be a valid certificate of conformity for the motor vehicle under this part 86 for its model year, without a separate application for certification under the requirements of this part 86. See §86.447-2006 for similar provisions that apply to nonroad engines produced for highway motorcycles.

(b) Nonrecreational-vehicle provisions. If you are not a recreational-vehicle manufacturer, you may produce highway motorcycles from recreational vehicles with engines below 50 cc under this section as long as the highway motorcycle has the labels specified in paragraph (d)(5) of this section and you do not make any of the changes described in paragraph (d)(2) of this section. If you modify the recreational vehicle or its engine in any of the ways described in paragraph (d)(2) of this section for installation in a highway motorcycle, we will consider you a manufacturer of a new highway motorcycle. Such modifications prevent you from using the provisions of this section.

(c) Liability. Vehicles for which you meet the requirements of this section are exempt from all the requirements and prohibitions of this part, except for those specified in this section. Engines and vehicles exempted under this section must meet all the applicable requirements from 40 CFR part 1051. This applies to engine manufacturers, vehicle manufacturers, and all other persons as if the highway motorcycles were recreational vehicles. The prohibited acts of 40 CFR part 85 apply to these new highway motorcycles; however, we consider the certificate issued under 40 CFR part 1051 for each recreational vehicle to also be a valid certificate of conformity for the highway motorcycle under this part 86 for its model year. If we make a determination that these engines or vehicles do not conform to the regulations during their useful life, we may require you to recall them under 40 CFR part 86 or 40 CFR 1068.505.

(d) Specific requirements. If you are a recreational-vehicle manufacturer and meet all the following criteria and requirements regarding your new highway motorcycle and its engine, the highway motorcycle is eligible for an exemption under this section:

(1) Your motorcycle must have an engine below 50 cc and it must be covered by a valid certificate of conformity as a recreational vehicle issued under 40 CFR part 1051.

(2) You must not make any changes to the certified recreational vehicle that we could reasonably expect to increase its exhaust emissions for any pollutant, or its evaporative emissions if it is subject to evaporative-emission standards. For example, if you make any of the following changes, you do not qualify for this exemption:

(i) Change any fuel system parameters from the certified configuration.

(ii) Change, remove, or fail to properly install any other component, element of design, or calibration specified in the vehicle manufacturer's application for certification. This includes aftertreatment devices and all related components.

(iii) Modify or design the engine cooling system so that temperatures or heat rejection rates are outside the original vehicle manufacturer's specified ranges.

(3) You must show that fewer than 50 percent of the total sales as a highway motorcycle or a recreational vehicle, from all companies, are used in highway motorcycles, as follows:

(i) If you are the original manufacturer of the vehicle, base this showing on your sales information.

(ii) In all other cases, you must get the original manufacturer of the vehicle to confirm this based on their sales information.

(4) The highway motorcycle must have the vehicle emission control information we require under 40 CFR part 1051.

(5) You must add a permanent supplemental label to the highway motorcycle in a position where it will remain clearly visible. In the supplemental label, do the following:

(i) Include the heading: "HIGHWAY MOTORCYCLE ENGINE EMISSION CONTROL INFORMATION".

(ii) Include your full corporate name and trademark. You may instead include the full corporate name and trademark of another company you choose to designate.

(iii) State: "THIS VEHICLE WAS ADAPTED FOR HIGHWAY USE WITHOUT AFFECTING ITS EMISSION CONTROLS.".

(iv) State the date you finished modifying the vehicle (month and year), if applicable.

(6) Send the Designated Compliance Officer a signed letter by the end of each calendar year (or less often if we tell you) with all the following information:

(i) Identify your full corporate name, address, and telephone number.

(ii) List the highway motorcycle models you expect to produce under this exemption in the coming year.

(iii) State: "We produced each listed highway motorcycle without making any changes that could increase its certified emission levels, as described in 40 CFR 86.448-2006.".

(e) Failure to comply. If your highway motorcycles do not meet the criteria listed in paragraph (d) of this section, they will be subject to the standards, requirements, and prohibitions of this part 86 and 40 CFR part 85, and the certificate issued under 40 CFR part 1051 will not be deemed to also be a certificate issued under this part 86. Introducing these motorcycles into commerce without a valid exemption or certificate of conformity under this part violates the prohibitions in 40 CFR 85.

(f) Data submission. We may require you to send us emission test data on the duty cycle for Class I motorcycles.

(g) Participation in averaging, banking and trading. Recreational vehicles adapted for use as highway motorcycles under this section may not generate or use emission credits under this part 86. These engines may generate credits under the ABT provisions in 40 CFR part 1051. These engines must use emission credits under 40 CFR part 1051 if they are certified to an FEL that exceeds an applicable standard.

11. In §86.513-2004, Table 1 in paragraph (a)(1) is amended to read as follows:

§ 86.513-2004 Fuel and engine lubricant specifications.

* * * * *

Table 1 of §86.513-2004—Gasoline Test Fuel Specifications

Item	Procedure	Value
Distillation Range:		
1. Initial boiling point, °C	ASTM D 86-97	23.9 - 35.0[1]
2. 10% point, °C	ASTM D 86-97	48.9 - 57.2
3. 50% point, °C	ASTM D 86-97	93.3 - 110.0
4. 90% point, °C	ASTM D 86-97	148.9 - 162.8
5. End point, °C	ASTM D 86-97	212.8
Hydrocarbon composition:		
1. Olefins, volume %	ASTM D 1319-98	10 maximum
2. Aromatics, volume %	ASTM D 1319-98	35 maximum
3. Saturates	ASTM D 1319-98	Remainder
Lead (organic), g/liter	ASTM D 3237	0.013 maximum
Phosphorous, g/liter	ASTM D 3231	0.0013 maximum
Sulfur, weight %	ASTM D 1266	0.008 maximum
Volatility (Reid Vapor Pressure), kPa	ASTM D 323	55.2 to 63.4[1]

[1] For testing at altitudes above 1,219 m, the specified volatility range is 52 to 55 kPa and the specified initial boiling point range is (23.9 to 40.6) °C.

* * * * *

26. Section 86.884-8 is amended by revising paragraph (c) introductory text to read as follows:

§86.884-8 Dynamometer and engine equipment.

*****

(c) An exhaust system with an appropriate type of smokemeter placed 10 to 32 feet from the exhaust manifold(s), turbocharger outlet(s), exhaust aftertreatment device(s), or crossover junction (on Vee engines), whichever is farthest downstream. The smoke exhaust system shall present an exhaust backpressure within +0.2 inch Hg of the upper limit at maximum rated horsepower, as established by the engine manufacturer in his sales and service literature for vehicle application. The following options may also be used:

*****

27. Section 86.884-10 is amended by revising paragraph (a) introductory text to read as follows:

§86.884-10 Information.

*****

(a) Engine description and specifications. A copy of the information specified in this paragraph must accompany each engine sent to the Administrator for compliance testing. If the engine is submitted to the Administrator for testing under subpart N of this part or 40 CFR part 1065, only the specified information need accompany the engine. The manufacturer need not record the information specified in this paragraph for each test if the information, with the exception of paragraphs (a)(3), (a)(12), and (a)(13) of this section, is included in the manufacturer's part I.

*****

28. Section 86.884-12 is amended by revising paragraph (c)(2) to read as follows:

§ 86.884-12 Test run.
*****
(c) * * *
(2) Warm up the engine by the procedure described in 40 CFR 1065.530.
*****

29. Section 86.1005-90 is amended by revising paragraphs (a)(1)(i), (a)(1)(ii), (a)(2)(vi)(A), and (a)(2)(vi)(B) to read as follows:

§86.1005-90 Maintenance of records; submittal of information.

(a) * * *
(1) * * *
(i) If testing heavy-duty gasoline-fueled or methanol-fueled Otto-cycle engines, the equipment requirements specified in 40 CFR part 1065, subparts B and C;
(ii) If testing heavy-duty petroleum-fueled or methanol-fueled diesel engines, the equipment requirements specified in 40 CFR part 1065, subparts B and C;
* * * * *
(2) * * *
(vi) * * *
(A) If testing gasoline-fueled or methanol-fueled Otto-cycle heavy-duty engines, the record requirements specified in 40 CFR 1065.695;
(B) If testing petroleum-fueled or methanol-fueled diesel heavy-duty engines, the record requirements specified in 40 CFR 1065.695;
* * * * *

30. Section 86.1108-87 is amended by revising paragraphs (a)(1)(i), (a)(1)(ii), (a)(2)(vi)(A), and (a)(2)(vi)(B) to read as follows:

§86.1108-87 Maintenance of records.

(a) * * *
(1) * * *
(i) If testing heavy-duty gasoline engines, the equipment requirements specified in 40 CFR part 1065, subparts B and C;
(ii) If testing heavy-duty diesel engines, the equipment requirements specified in 40 CFR part 1065, subparts B and C;
* * * * *
(2) * * *
(vi) * * *
(A) If testing heavy-duty gasoline engines, the record requirements specified in 40 CFR 1065.695.
(B) If testing heavy-duty diesel engines, the record requirements specified in 40 CFR 1065.695.
* * * * *

12. A new §86.1213-08 is added to read as follows:

§86.1213-08 Fuel specifications.

The test fuels listed in 40 CFR part 1065, subpart H, shall be used for evaporative emission testing.

31. Section 86.1301-90 is renumbered and revised to read as follows:

§86.1301 Scope; applicability.

This subpart specifies gaseous emission test procedures for Otto-cycle and diesel heavy-duty engines, and particulate emission test procedures for diesel heavy-duty engines, as follows:
(a) For model years 1990 through 2003, manufacturers must use the test procedures specified in §86.1305-90.
(b) For model years 2004 and 2005, manufacturers must use the test procedures specified in §86.1305-2004.
(c) For model years 2006 and 2007, manufacturers may use the test procedures specified in §86.1305-2004 or §86.1305-2008.
(d) For model years 2008 and later, manufacturers must use the test procedures specified in §86.1305-2008.
(e) As allowed under subpart A of this part, manufacturers may use carryover data from previous model years to demonstrate compliance with emission standards, without regard to the provisions of this section.

32. Section 86.1304-90 is renumbered and amended by revising paragraph (a) to read as follows:
§86.1304 Section numbering; construction.
(a) Section numbering. The model year of initial applicability is indicated by the section number. The digits following the hyphen designate the first model year for which a section is applicable. The section continues to apply to subsequent model years unless a later model year section is adopted. (Example: §86.13xx–2004 applies to the 2004 and subsequent model years. If a §86.13xx–2007 is promulgated it would apply beginning with the 2007 model year; §86.13xx–2004 would apply to model years 2004 through 2006.)
* * * * *

14. A new §86.1305-2008 is added to read as follows:
§86.1305-2008 Introduction; structure of subpart.
(a) This subpart specifies the equipment and procedures for performing exhaust-emission tests on Otto-cycle and diesel-cycle heavy-duty engines. Subpart A of this part sets forth the emission standards and general testing requirements to comply with EPA certification procedures.
(b) Use the applicable equipment and procedures for spark-ignition or compression-ignition engines in 40 CFR part 1065 to determine whether engines meet the duty-cycle emission standards in subpart A of this part. Measure the emissions of all regulated pollutants as specified in 40 CFR part 1065. Note that we generally do not allow partial-flow sampling for measuring PM emissions on a laboratory dynamometer for transient testing. Use the duty cycles and procedures specified in §86.1358-2007, §86.1360-2007, and §86.1362-2007. Adjust emission results from engines using aftertreatment technology with infrequent regeneration events as described in §86.004-28.
(c) The provisions in §86.1370-2007 and §86.1372-2007 apply for determining whether an engine meets the applicable not-to-exceed emission standards.
(d) Measure smoke using the procedures in subpart I of this part for evaluating whether engines meet the smoke standards in subpart A of this part.
(e) Use the fuels specified in 40 CFR part 1065 to perform valid tests, as follows:
(1) For service accumulation, use the test fuel or any commercially available fuel that is representative of the fuel that in-use engines will use.
(2) For diesel-fueled engines, use the ultra low-sulfur diesel fuel specified in 40 CFR part 1065 for emission testing.
(f) You may use special or alternate procedures to the extent we allow them under 40 CFR 1065.10.
(g) This subpart is addressed to you as a manufacturer, but it applies equally to anyone who does testing for you.

33. Section 86.1321-90 is amended by revising paragraph (a)(3)(ii) to read as follows:
§86.1321-90 Hydrocarbon analyzer calibration.
* * * * *
(a) * * *
(3) * * *

(ii) The HFID optimization procedures outlined in §86.331–79(c).

* * * * *

34. Section 86.1321-94 is amended by revising paragraph (a)(3)(ii) to read as follows:

§86.1321-94 Hydrocarbon analyzer calibration.

*****

(a) * * *

(3) * * *

(ii) The procedure listed in §86.331–79(c).

* * * * *

35. Section 86.1360-2007 is amended by revising paragraph (b), removing and reserving paragraphs (c) and (e), and removing paragraphs (h), and (i) to read as follows:

§86.1360-2007 Supplemental emission test; test cycle and procedures.

* * * * *

(b) Test cycle. (1) Perform testing as described in§86.1362-2007 for determining whether an engine meets the applicable standards when measured over the supplemental emission test.

(2) For engines not certified to a NOx standard or FEL less than1.5 g/bhp-hr, EPA may select, and require the manufacturer to conduct the test using, up to three discrete test points within the control area defined in paragraph (d) of this section. EPA will notify the manufacturer of these supplemental test points in writing in a timely manner before the test. Emission sampling for these discrete test modes must include all regulated pollutants except particulate matter.

* * * * *

16. A new §86.1362-2007 is added to read as follows:

§86.1362-2007 How do I measure emissions using ramped-modal procedures?

This section describes how to test engines under steady-state conditions.

(a) Perform steady-state testing with ramped-modal cycles. Start sampling at the beginning of the first mode and continue sampling until the end of the last mode. Calculate emissions as described in 40 CFR 1065.650 and cycle statistics as described in 40 CFR 1065.514.

(b) Measure emissions by testing the engine on a dynamometer with the following duty cycle to determine whether it meets the applicable steady-state emission standards:

RMC Mode	Time in Mode (seconds)	Engine Speed [1,2]	Torque (percent) [2,3]
1a Steady-state	170	Warm Idle	0
1b Transition	20	Linear Transition	Linear Transition
2a Steady-state	170	A	100
2b Transition	20	A	Linear Transition
3a Steady-state	102	A	25
3b Transition	20	A	Linear Transition
4a Steady-state	100	A	75
4b Transition	20	A	Linear Transition
5a Steady-state	103	A	50
5b Transition	20	Linear Transition	Linear Transition
6a Steady-state	194	B	100
6b Transition	20	B	Linear Transition
7a Steady-state	219	B	25
7b Transition	20	B	Linear Transition
8a Steady-state	220	B	75
8b Transition	20	B	Linear Transition
9a Steady-state	219	B	50
9b Transition	20	Linear Transition	Linear Transition
10a Steady-state	171	C	100
10b Transition	20	C	Linear Transition
11a Steady-state	102	C	25
11b Transition	20	C	Linear Transition
12a Steady-state	100	C	75
12b Transition	20	C	Linear Transition
13a Steady-state	102	C	50
13b Transition	20	Linear Transition	Linear Transition
14 Steady-state	168	Warm Idle	0

[1] Speed terms are defined in 40 CFR part 1065.
[2] Advance from one mode to the next within a 20-second transition phase. During the transition phase, command a linear progression from the speed or torque setting of the current mode to the speed or torque setting of the next mode.
[3] The percent torque is relative to maximum torque at the commanded engine speed.

(c) During idle mode, operate the engine with the following parameters:

(1) Hold the speed within your specifications.

(2) Set the engine to operate at its minimum fueling rate.

(3) Keep engine torque under 5 percent of maximum test torque.

(d) For full-load operating modes, operate the engine at its maximum fueling rate.

(e) See 40 CFR part 1065 for detailed specifications of tolerances and calculations.

(f) Perform the ramped-modal test with a warmed-up engine. If the ramped-modal test follows directly after testing over the Federal Test Procedure, consider the engine warm. Otherwise, operate the engine to warm it up as described in 40 CFR part 1065, subpart F.

36. Section 86.1509-84 is amended by revising paragraphs (c) and (d) to read as follows:

§86.1509-84 Exhaust gas sampling system.

* * * * *

(c) A CVS sampling system with bag or continuous analysis as specified in 40 CFR part 1065 is permitted as applicable. The inclusion of an additional raw carbon dioxide (CO_2) analyzer as specified in 40 CFR part 1065 is required if the CVS system is used, in order to accurately determine the CVS dilution factor. The heated sample line specified in 40 CFR part 1065 for raw emission requirements is not required for the raw CO_2 measurement.

(d) A raw exhaust sampling system as specified in 40 CFR part 1065 is permitted.

37. Section 86.1511-84 is amended by revising paragraphs (a)(1) and (b) to read as follows:

§86.1511-84 Exhaust gas analysis system.

(a) * * *

(1) The analyzer used shall conform to the accuracy provisions of 40 CFR part 1065, subparts C, D, and F.

* * * * *

(b) The inclusion of a raw CO_2 analyzer as specified in 40 CFR part 1065 is required in order to accurately determine the CVS dilution factor.

38. Section 86.1513-90 is revised to read as follows:

§86.1513-90 Fuel specifications.

The requirements of this section are set forth in §86.1313–94 for heavy-duty engines, and in §86.113–90(a) for light-duty trucks.

39. Section 86.1513-94 is revised to read as follows:

§86.1513-94 Fuel specifications.

The requirements of this section are set forth in 40 CFR part 1065, subpart H, for heavy-duty engines and in §86.113–94 for light-duty trucks.

40. Section 86.1514-84 is amended by revising paragraphs (b) and (c) to read as follows:

§86.1514-84 Analytical gases.

*****

(b) If the raw CO sampling system specified in 40 CFR part 1065 is used, the analytical gases specified in 40 CFR part 1065, subpart H, shall be used.

(c) If a CVS sampling system is used, the analytical gases specified in 40 CFR part 1065, subpart H, shall be used.

41. Section 86.1519-84 is revised to read as follows:

§86.1519-84 CVS calibration.

If the CVS system is used for sampling during the idle emission test, the calibration instructions are specified in 40 CFR part 1065, subpart D, for heavy-duty engines, and §86.119–78 for light-duty trucks.

42. Section 86.1524-84 is revised to read as follows:

§86.1524-84 Carbon dioxide analyzer calibration.

(a) The calibration requirements for the dilute-sample CO_2 analyzer are specified in 40 CFR part 1065, subpart D, for heavy-duty engines and §86.124–78 for light-duty trucks.

(b) The calibration requirements for the raw CO_2 analyzer are specified in 40 CFR part 1065, subpart D.

43. Section 86.1530-84 is amended by revising paragraph (b) to read as follows:

§86.1530-84 Test sequence; general requirements.

*****

(b) Ambient test cell conditions during the test shall be those specified in §86.130–78 or 40 CFR part 1065, subpart F.

44. Section 86.1537-84 is amended by revising paragraphs (c), (e)(6), and (f) to read as follows:

§86.1537-84 Idle test run.

* * * * *

(c) Achieve normal engine operating condition. The transient engine or chassis dynamometer test is an acceptable technique for warm-up to normal operating condition for the idle test. If the emission test is not performed prior to the idle emission test, a heavy-duty engine may be warmed-up according to 40 CFR part 1065, subpart F. A light-duty truck may be warmed up by operation through one Urban Dynamometer Driving Schedule test procedure (see §86.115–78 and appendix I to this part).

* * * * *

(e) * * *

(6) For bag sampling, sample idle emissions long enough to obtain a sufficient bag sample, but in no case shorter than 60 seconds nor longer than 6 minutes. Follow the sampling and exhaust measurements requirements of 40 CFR part 1065, subpart F, for conducting the raw CO_2 measurement.

* * * * *

(f) If the raw exhaust sampling and analysis technique specified in 40 CFR part 1065 is used, the following procedures apply:

(1) Warm up the engine or vehicle per paragraphs (c) and (d) of this section. Operate the engine or vehicle at the conditions specified in paragraph (e)(4) of this section.

(2) Follow the sampling and exhaust measurement requirements of 40 CFR part 1065, subpart F. The idle sample shall be taken for 60 seconds minimum, and no more than 64 seconds. The chart reading procedures of 40 CFR part 1065, subpart F, shall be used to determine the analyzer response.

* * * * *

45. Section 86.1540-84 is amended by revising paragraph (b) to read as follows:

§86.1540-84 Idle exhaust sample analysis.

*****

(b) If the CVS sampling system is used, the analysis procedures for dilute CO and CO_2 specified in 40 CFR part 1065 apply. Follow the raw CO_2 analysis procedure specified in 40 CFR part 1065, subpart F, for the raw CO_2 analyzer.

(c) If the continuous raw exhaust sampling technique specified in 40 CFR part 1065 is used, the analysis procedures for CO specified in 40 CFR part 1065, subpart F, apply.

46. Section 86.1542-84 is amended by revising paragraph (a) introductory text to read as follows:

§86.1542-84 Information required.

(a) General data—heavy-duty engines. Information shall be recorded for each idle emission test as specified in 40 CFR part 1065, subpart G. The following test data are required:

*****

47. Section 86.1544-84 is amended by revising paragraphs (b)(1), (b)(2), and (c) to read as follows:

§86.1544-84 Calculation; idle exhaust emissions.

* * * * *

(b) * * *

(1) Use the procedures, as applicable, in 40 CFR 1065.650 to determine the dilute wet-basis CO and CO_2 in percent.

(2) Use the procedure, as applicable, in 40 CFR 1065.650 to determine the raw dry-basis CO_2 in percent.

* * * * *

(c) If the raw exhaust sampling and analysis system specified in 40 CFR part 1065 is used, the percent for carbon monoxide on a dry basis shall be calculated using the procedure, as applicable, in 40 CFR 1065.650.

48. Section 86.1708-99 is amended by revising Tables R99-5 and R99-6 to read as follows:

§86.1708-99 Exhaust emission standards for 1999 and later light-duty vehicles.

* * * * *

(c) * * *

(2) * * *

Table R99-5 -- Intermediate Useful Life (50,000 mile) In-Use Standards (g/mi) for Light-duty Vehicles

Vehicle Emission Category	Model Year	NMOG	CO	NOx	HCHO
LEV	1999	0.100	3.4	0.3	0.015
ULEV	1999-2002	0.055	2.1	0.3	0.008

Table R99-6 -- Full Useful Life (100,000 mile) In-Use Standards (g/mi) for Light-duty Vehicles

Vehicle Emission Category	Model Year	NMOG	CO	NOx	HCHO
LEV	1999	0.125	4.2	0.4	0.018
ULEV	1999-2002	0.075	3.4	0.4	0.011

* * * * *

49. Section 86.1709-99 is amended by revising paragraph (c)(1) introductory text and by revising Table R99-14.2, to read as follows:

§ 86.1709-99 Exhaust emission standards for 1999 and later light light-duty trucks.

* * * * *

(c) * * *

(1) 1999 model year light light-duty trucks certified as LEVs and 1999 through 2002 model year light light-duty trucks certified as ULEVs shall meet the applicable intermediate and full useful life in-use standards in paragraph (c)(2) of this section, according to the following provisions:

* * * * *

(e) * * *

(2) * * *

Table R99-14.2 -- SFTP Exhaust Emission Standards (g/mi) for LEVs and ULEVs

	US06 Test		A/C Test	
Loaded Vehicle Weight (lbs)	NMHC + NOX	CO	NMHC + NOX	CO
0-3750.....	0.14	8.0	0.20	2.7
3751-5750.....	0.25	10.5	0.27	3.5

50. Section 86.1710-99 is amended by revising paragraph (c)(8) introductory text to read as follows:

§ 86.1710-99 Fleet average non-methane organic gas exhaust emission standards for light-duty vehicles and light light-duty trucks.

* * * * *

(c) * * *

(8) Manufacturers may earn and bank credits in the NTR for model years 1997 and 1998. In states without a Section 177 Program effective in model year 1997 or 1998, such credits will be calculated as set forth in paragraphs (a) and (b) of this section, except that the applicable fleet average NMOG standard shall be 0.25 g/mi NMOG for the averaging set for light light-duty trucks from 0-3750 lbs LVW and light-duty vehicles or 0.32 g/mi NMOG for the averaging set for light light-duty trucks from 3751-5750 lbs LVW. In states that opt into National LEV and have a Section 177 Program effective in model year 1997 or 1998, such credits will equal the unused credits earned in those states.

* * * * *

51. Section 86.1711-99 is amended by revising paragraph (a) to read as follows:**§ 86.1711-99 Limitations on sale of Tier 1 vehicles and TLEVs.**

(a) In the 2001 and subsequent model years, manufacturers may sell Tier 1 vehicles and TLEVs in the NTR only if vehicles with the same engine families are certified and offered for sale in California in the same model year, except as provided under § 86.1707(d)(4).

* * * * *

52. Section 86.1808-01 is amended by revising paragraph (f)(19(iii) to read as follows:

§86.1808-01 Maintenance instructions.

* * * * *

(f) * * *

(19) * * *

(iii) Any person who violates a provision of this paragraph (f) shall be subject to a civil penalty of not more than $32,500 per day for each violation. This maximum penalty is shown for calendar year 2004. Maximum penalty limits for later years may be set higher based on the Consumer Price Index, as specified in 40 CFR part 19. In addition, such person shall be liable for all other remedies set forth in Title II of the Clean Air Act, remedies pertaining to provisions of Title II of the Clean Air Act, or other applicable provisions of law.

53. Section 86.1811-04 is amended by revising Table S04-2 in paragraph (c)(6) to read as follows;

§ 86.1811-04 Emission standards for light-duty vehicles, light-duty trucks and medium-duty passenger vehicles.

* * * * *

(c) * * *

(6) * * *

Table S04-2.–Tier 2 and Interim Non-Tier 2 Intermediate Useful Life (50,000 mile) Exhaust Mass Emission Standards (grams per mile)

Bin No.	NOx	NMOG	CO	HCHO	PM	Notes
11	0.6	0.195	5.0	0.022	. . . . .	a c f h
10	0.4	0.125/0.160	3.4/4.4	0.015/0.018	. . . . .	a b d f g h
9	0.2	0.075/0.140	3.4	0.015	. . . . .	a b e f g h
8	0.14	0.100/0.125	3.4	0.015	. . . . .	b f h i
7	0.11	0.075	3.4	0.015	. . . . .	f h
6	0.08	0.075	3.4	0.015	. . . . .	f h
5	0.05	0.075	3.4	0.015	. . . . .	f h

Notes:
[a] This bin deleted at end of 2006 model year (end of 2008 model year for HLDTs and MDPVs).
[b] Higher NMOG, CO and HCHO values apply for HLDTs and MDPVs only.
[c] This bin is only for MDPVs.
[d] Optional NMOG standard of 0.195 g/mi applies for qualifying LDT4s and qualifying MDPVs only.
[e] Optional NMOG standard of 0.100 g/mi applies for qualifying LDT2s only.
[f] The full useful life PM standards from Table S04-1 also apply at intermediate useful life.
[g] Intermediate life standards of this bin are optional for diesels.
[h] Intermediate life standards are optional for vehicles certified to a useful life of 150,000 miles.
[i] Higher NMOG standard deleted at end of 2008 model year.

22. In Appendix I to Part 86 paragraph (a) is amended by revising the table entries for "961" and "1345", paragraph (b) is amended by revising the table entries for "363," "405," "453," "491," "577," "662," "663," "664," and "932", and paragraph (h) is amended by adding table entries for "595," "596," "597," "598," "599," and "600" in numerical order to read as follows:

APPENDIX I TO PART 86–URBAN DYNAMOMETER SCHEDULES

(a) EPA Urban Dynamometer Driving Schedule for Light-Duty Vehicles and Light-Duty Trucks.

EPA URBAN DYNAMOMETER DRIVING SCHEDULE
(Speed versus Time Sequence)

Time (sec.)	Speed (m.p.h.)
* * * * * * *	
961	5.3
* * * * * * *	
1345	18.3
* * * * * * *	

(b) EPA Urban Dynamometer Driving Schedule for Light-Duty Vehicles, Light-Duty Trucks, and Motorcycles with engine displacements equal to or greater than 170 cc (10.4 cu. in.).
SPEED VERSUS TIME SEQUENCE

Time (seconds)	Speed (kilometers per hour)
* * * * * * *	
363	52.8

* * * * * * *	
405	14.8
* * * * * * *	
453	31.9
* * * * * * *	
491	55.5
* * * * * * *	
577	27.4
* * * * * * *	
662	42.0
* * * * * * *	
663	42.2
* * * * * * *	
664	42.2
* * * * * * *	
932	40.2
* * * * * * *	

* * * * *

(h) EPA SC03 Driving Schedule for Light-Duty Vehicles and Light-Duty Trucks.

EPA SC03 DRIVING SCHEDULE
(Speed versus Time Sequence)

Time (sec)	Speed (mph)
* * * * * * *	
595	0.0
596	0.0
597	0.0
598	0.0
599	0.0
600	0.0

PART 89—CONTROL OF EMISSIONS FROM NEW AND IN-USE NONROAD COMPRESSION-IGNITION ENGINES

54. The authority citation for part 89 is revised to read as follows:
Authority: 42 U.S.C. 7401 - 7671q.

55. Section 89.1 is amended by revising paragraph (b)(4)(ii) to read as follows:

§89.1 Applicability.

* * * * *

(b) * * *

(4) * * *

(ii) Are exempted from the requirements of 40 CFR part 94 by exemption provisions of 40 CFR part 94 other than those specified in 40 CFR 94.907 or 94.912.

* * * * *

56. Section 89.2 is amended by removing the definitions for "Marine diesel engine" and "Vessel", revising the definition of "United States", and adding definitions for "Amphibious vehicle", "Marine engine", and "Marine vessel" to read as follows:

§89.2 Definitions.

* * * * *

Amphibious vehicle means a vehicle with wheels or tracks that is designed primarily for operation on land and secondarily for operation in water.

* * * * *

Marine engine means a nonroad engine that is installed or intended to be installed on a marine vessel. This includes a portable auxiliary marine engine only if its fueling, cooling, or exhaust system is an integral part of the vessel. There are two kinds of marine engines:

(1) Propulsion marine engine means a marine engine that moves a vessel through the water or directs the vessel's movement.

(2) Auxiliary marine engine means a marine engine not used for propulsion.

Marine vessel has the meaning given in 1 U.S.C. 3, except that it does not include amphibious vehicles. The definition in 1 U.S.C. 3 very broadly includes every craft capable of being used as a means of transportation on water.

* * * * *

United States means the States, the District of Columbia, the Commonwealth of Puerto Rico, the Commonwealth of the Northern Mariana Islands, Guam, American Samoa, and the U.S. Virgin Islands.

* * * * *

57. Section 89.102 is amended by revising paragraph (d)(1)(i) to read as follows:

§89.102 Effective dates, optional inclusion, flexibility for equipment manufacturers.

* * * * *

(d) * * *

(1) * * *

(i) Equipment rated at or above 37 kW. For nonroad equipment and vehicles with engines rated at or above 37 kW, a manufacturer may take any of the actions identified in §89.1003(a)(1) for a portion of its U.S.-directed production volume of such equipment and vehicles during the seven years immediately following the date on which Tier 2 engine standards first apply to engines used in such equipment and vehicles, provided that the seven-year sum of these portions in each year, as expressed as a percentage for each year, does not exceed 80, and provided that all such equipment and vehicles or equipment contain Tier 1 or Tier 2 engines;

* * * * *

58. Section 89.110 is amended by revising paragraph (b)(2) to read as follows:

§89.110 Emission control information label.

* * * * *

(b) * * *

(2) The full corporate name and trademark of the manufacturer; though the label may identify another company and use its trademark instead of the manufacturer's if the provisions of §89.1009 are met.

* * * * *

59. Section 89.112 is amended by revising paragraph (f)(3) to read as follows:

§89.112 Oxides of nitrogen, carbon monoxide, hydrocarbon, and particulate matter exhaust emission standards.

* * * * *

(f) * * *

(3) Test procedures. NOx, NMHC, and PM emissions are measured using the procedures set forth in 40 CFR part 1065, in lieu of the procedures set forth in subpart E of this part. CO emissions may be measured using the procedures set forth either in 40 CFR part 1065 or in Subpart E of this part. Manufacturers may use an alternate procedure to demonstrate the desired level of emission control if approved in advance by the Administrator. Engines meeting the requirements to qualify as Blue Sky Series engines must be capable of maintaining a comparable level of emission control when tested using the procedures set forth in paragraph (c) of this section and subpart E of this part. The numerical emission levels measured using the procedures from subpart E of this part may be up to 20 percent higher than those measured using the procedures from 40 CFR part 1065 and still be considered comparable.

60. Section 89.130 is amended to read as follows:

§89.130 Rebuild practices.

The provisions of 40 CFR 1068.120 apply to rebuilding of engines subject to the requirements of this part 89.

61. Section 89.301 is amended by revising paragraph (d) to read as follows:

§89.301 Scope; applicability.

* * * * *

(d) Additional information about system design, calibration methodologies, and so forth, for raw gas sampling can be found in 40 CFR part 1065. Examples for system design, calibration methodologies, and so forth, for dilute exhaust gas sampling can be found in 40 CFR part 1065.

62. Section 89.319 is amended by revising paragraphs (b)(2)(i) and (c) introductory text to read as follows:

§89.319 Hydrocarbon analyzer calibration.

(b) * * *

(2) * * *

(ii) The HFID optimization procedures outlined in 40 CFR part 1065, subpart D.

* * * * *

(c) Initial and periodic calibration. Prior to introduction into service, after any maintenance which could alter calibration, and monthly thereafter, the FID or HFID hydrocarbon analyzer shall be calibrated on all normally used instrument ranges using the steps in this paragraph (c). Use the same flow rate and pressures as when analyzing samples. Calibration gases shall be introduced directly at the analyzer, unless the "overflow" calibration option of 40 CFR part 1065, subpart F, for the HFID is taken. New calibration curves need not be generated each month if the existing curve can be verified as continuing to meet the requirements of paragraph (c)(3) of this section.

*****

63. Section 89.320 is amended by revising paragraph (d) to read as follows:

§89.320 Carbon monoxide analyzer calibration.

* * * * *

(d) The initial and periodic interference, system check, and calibration test procedures specified in 40 CFR part 1065 may be used in lieu of the procedures specified in this section.

64. Section 89.321 is amended by revising paragraph (d) to read as follows:

§89.321 Oxides of nitrogen analyzer calibration.

* * * * *

(d) The initial and periodic interference, system check, and calibration test procedures specified in 40 CFR part 1065 may be used in lieu of the procedures specified in this section.

65. Section 89.322 is amended by revising paragraph (b) to read as follows:

§89.322 Carbon dioxide analyzer calibration.

* * * * *

(b) The initial and periodic interference, system check, and calibration test procedures specified in 40 CFR part 1065 may be used in lieu of the procedures in this section.

66. Section 89.410 is amended by adding paragraph (e) to read as follows:

§89.410 Engine test cycle.

* * * * *

(e) Manufacturers may optionally use the ramped-modal duty cycles corresponding to the discrete-mode duty cycles specified in this section, as described in 40 CFR 1039.505.

67. Section 89.419 is amended by revising paragraphs (a) introductory text, (a)(3), (b)(1) introductory text, (b)(2)(i), (b)(2)(v)(B), (b)(4)(ii), and (b)(4)(iii) to read as follows:

§89.419 Dilute gaseous exhaust sampling and analytical system description.

(a) General. The exhaust gas sampling system described in this section is designed to measure the true mass of gaseous emissions in the exhaust of petroleum-fueled nonroad compression-ignition engines. This system utilizes the CVS concept (described in 40 CFR part 1065, subparts A and B) of measuring mass emissions of HC, CO, and CO2. A continuously integrated system is required for HC and NOx measurement and is allowed for all CO and CO2 measurements. The mass of gaseous emissions is determined from the sample concentration and total flow over the test period. As an option, the measurement of total fuel mass consumed over a cycle may be substituted for the exhaust measurement of CO2. General requirements are as follows:

* * *

(3) The CO and CO2 analytical system requires:

(i) Bag sampling (see 40 CFR part 1065) and analytical capabilities (see 40 CFR part 1065), as shown in Figure 2 and Figure 3 in appendix A to this subpart; or

* * * * *

(b) * * *

(1) Exhaust dilution system. The PDP–CVS shall conform to all of the requirements listed for the exhaust gas PDP–CVS in 40 CFR part 1065. The CFV–CVS shall conform to all of the requirements listed for the exhaust gas CFV–CVS in 40 CFR part 1065. In addition, the CVS must conform to the following requirements:

* * * * *

(2) * * *

(i) The continuous HC sample system (as shown in Figure 2 or 3 in appendix A to this subpart) uses an

"overflow" zero and span system. In this type of system, excess zero or span gas spills out of the probe when zero and span checks of the analyzer are made. The "overflow" system may also be used to calibrate the HC analyzer according to 40 CFR part 1065, subpart F, although this is not required.

* * * * *

(v) * * *

(B) Have a wall temperature of 191 °C ±11 °C over its entire length. The temperature of the system shall be demonstrated by profiling the thermal characteristics of the system where possible at initial installation and after any major maintenance performed on the system. The profiling shall be accomplished using the insertion thermocouple probing technique. The system temperature will be monitored continuously during testing at the locations and temperature described in 40 CFR 1065.145.

* * * * *

(4) * * *

(ii) The continuous NOX, CO, or CO2 sampling and analysis system shall conform to the specifications of 40 CFR 1065.145 with the following exceptions and revisions:

(A) The system components required to be heated by 40 CFR 1065.145 need only be heated to prevent water condensation, the minimum component temperature shall be 55 °C.

(B) The system response shall meet the specifications in 40 CFR part 1065, subpart C.

(C) Alternative NOX measurement techniques outlined in 40 CFR part 1065, subpart D, are not permitted for NOX measurement in this subpart.

(D) All analytical gases must conform to the specifications of §89.312.

(E) Any range on a linear analyzer below 155 ppm must have and use a calibration curve conforming to §89.310.

(iii) The chart deflections or voltage output of analyzers with non-linear calibration curves shall be converted to concentration values by the calibration curve(s) specified in §89.313 before flow correction (if used) and subsequent integration takes place.

68. Section 89.421 is amended by revising paragraphs (b) and (c) to read as follows:

§89.421 Exhaust gas analytical system; CVS bag sample.

* * * * *

(b) Major component description. The analytical system, Figure 4 in appendix A to this subpart, consists of a flame ionization detector (FID) (heated for petroleum-fueled compression-ignition engines to 191 °C ±6 °C) for the measurement of hydrocarbons, nondispersive infrared analyzers (NDIR) for the measurement of carbon monoxide and carbon dioxide, and a chemiluminescence detector (CLD) (or HCLD) for the measurement of oxides of nitrogen. The exhaust gas analytical system shall conform to the following requirements:

(1) The CLD (or HCLD) requires that the nitrogen dioxide present in the sample be converted to nitric oxide before analysis. Other types of analyzers may be used if shown to yield equivalent results and if approved in advance by the Administrator.

(2) If CO instruments are used which are essentially free of CO2 and water vapor interference, the use of the conditioning column may be deleted. (See 40 CFR part 1065, subpart D.)

(3) A CO instrument will be considered to be essentially free of CO2 and water vapor interference if its response to a mixture of 3 percent CO2 in N2, which has been bubbled through water at room temperature, produces an equivalent CO response, as measured on the most sensitive CO range, which is less than 1 percent of full scale CO concentration on ranges above 300 ppm full scale or less than 3 ppm on ranges below 300 ppm full scale. (See 40 CFR part 1065, subpart D.)

(c) Alternate analytical systems. Alternate analysis systems meeting the specifications of 40 CFR part 1065, subpart A, may be used for the testing required under this subpart. Heated analyzers may be used in their heated configuration.

* * * * *

69. Section 89.424 is amended by revising the note at the end of paragraph (d)(3) to read as follows:

§89.424 Dilute emission sampling calculations.

* * * * *

(d) * * *

(3) * * *

(Note: If a CO instrument that meets the criteria specified in 40 CFR part 1065, subpart C, is used without a sample dryer according to 40 CFR 1065.145, CO_{em} must be substituted directly for CO_e and CO_{dm} must be substituted directly for CO_d.)

* * * * *

70. Appendix A to Subpart F is amended by revising Table 1 to read as follows:

Appendix A to Subpart F of Part 89—Sampling Plans for Selective Enforcement Auditing of Nonroad Engines

Table 1—Sampling Plan Code Letter

Annual engine family sales	Code letter
20-50	AA[1]
20-99	A
100-299	B
300-499	C
500 or greater	D

[1]A manufacturer may optionally use either the sampling plan for code letter "AA" or sampling plan for code letter "A" for Selective Enforcement Audits of engine families with annual sales between 20 and 50 engines. Additionally, the manufacturer may switch between these plans during the audit.

* * * * *

71. Section 89.603 is amended by adding paragraph (e) to read as follows:

§89.603 General requirements for importation of nonconforming nonroad engines.

* * * * *

(e)(1)The applicable emission standards for engines imported by an ICI under this subpart are the emission standards applicable to the Original Production (OP) year of the engine.

(2) Where engine manufacturers have choices in emission standards for one or more pollutants in a given model year, the standard that applies to the ICI is the least stringent standard for that pollutant applicable to the OP year for the appropriate power category.

(3) ICIs may not generate, use or trade emission credits or otherwise participate in any way in the averaging, banking and trading program.

(4) An ICI may import no more than a total of 5 engines under the certificate(s) it receives under this part for any given model year, except as allowed by paragraph (e)(5) of this section. For ICIs owned by a parent company, the importation limit includes importation by the parent company and all its subsidiaries.

(5) An ICI may exceed the limit outlined in paragraph (e)(4) of this section, provided that any engines in excess of the limit meet the emission standards and other requirements outlined in the applicable provisions of Part 89 or 1039 of this chapter for the model year in which the engine is modified (instead of the emission standards and other requirements applicable for the OP year of the vehicle/engine).

72. Section 89.612 is amended by revising paragraph (d) to read as follows:

§89.612 Prohibited acts; penalties.

* * * * *

(d) An importer who violates section 213(d) and section 203 of the Act is subject to the provisions of section 209 of the Act and is also subject to a civil penalty under section 205 of the Act of not more than $32,500 for each nonroad engine subject to the violation. In addition to the penalty provided in the Act, where applicable, a person or entity who imports an engine under the exemption provisions of §89.611(b) and, who fails to deliver the nonroad engine to the U.S. Customs Service is liable for liquidated damages in the amount of the bond required by applicable Customs laws and regulations. The maximum penalty value listed in this paragraph (d) is shown for calendar year 2004. Maximum penalty limits for later years may be adjusted based on the Consumer Price Index. The specific regulatory provisions for changing the maximum penalties, published in 40 CFR part 19, reference the applicable U.S. Code citation on which the prohibited action is based.

* * * * *

73. A new §89.913 is added to subpart J to read as follows:

§89.913 What provisions apply to engines certified under the motor-vehicle program?

You may use the provisions of 40 CFR 1039.605 to introduce new nonroad engines into commerce if they are already certified to the requirements that apply to compression-ignition engines under 40 CFR parts 85 and 86. For the purposes of this section, all references in 40 CFR 1039.605 to 40 CFR part 1039 or sections in that part are replaced by references to this part 89 or the corresponding sections in this part 89.

74. A new §89.914 is added to subpart J to read as follows:

§89.914 What provisions apply to vehicles certified under the motor-vehicle program?

You may use the provisions of 40 CFR 1039.610 to introduce new nonroad engines or equipment into commerce if the vehicle is already certified to the requirements that apply under 40 CFR parts 85 and 86. For the purposes of this section, all references in 40 CFR 1039.610 to 40 CFR part 1039 or sections in that part are replaced by references to this part 89 or the corresponding sections in this part 89.

75. Section 89.1003 is amended by removing and reserving paragraphs (b)(5) and (b)(6), redesignating (b)(7)(iv) as (b)(7)(vii), revising paragraphs (a)(3)(iii), (b)(7)(ii), and (b)(7)(iii), and adding paragraphs (b)(7)(iv) and (b)(7)(viii) to read as follows:

§89.1003 Prohibited acts.

(a) * * *

(3) * * *

(iii) For a person to deviate from the provisions of §89.130 when rebuilding an engine (or rebuilding a portion of an engine or engine system). Such a deviation violates paragraph (a)(3)(i) of this section.

* * * * *

(b) * * *

(7) * * *

(ii) The engine manufacturer or its agent takes ownership and possession of the engine being replaced or confirms that the engine has been destroyed; and

(iii) If the engine being replaced was not certified to any emission standards under this part, the replacement engine must have a permanent label with your corporate name and trademark and the following language, or similar alternate language approved by the Administrator:

THIS ENGINE DOES NOT COMPLY WITH U.S. EPA NONROAD OR HIGHWAY EMISSION REQUIREMENTS. SELLING OR INSTALLING THIS ENGINE FOR ANY PURPOSE OTHER THAN TO REPLACE A NONROAD ENGINE BUILT BEFORE JANUARY 1, [Insert appropriate year reflecting when the earliest tier of standards began to apply to engines of that size and type] MAY BE A VIOLATION OF FEDERAL LAW SUBJECT TO CIVIL

PENALTY.

(iv) If the engine being replaced was certified to emission standards less stringent than those in effect when you produce the replacement engine, the replacement engine must have a permanent label with your corporate name and trademark and the following language, or similar alternate language approved by the Administrator:

THIS ENGINE COMPLIES WITH U.S. EPA NONROAD EMISSION REQUIREMENTS UNDER THE PROVISIONS OF 40 CFR 89.1003(b)(7). SELLING OR INSTALLING THIS ENGINE FOR ANY PURPOSE OTHER THAN TO REPLACE A NONROAD ENGINE BUILT BEFORE JANUARY 1, [Insert appropriate year reflecting when the next tier of emission standards began to apply] MAY BE A VIOLATION OF FEDERAL LAW SUBJECT TO CIVIL PENALTY.

* * * * *

(viii) The provisions of this section may not be used to circumvent emission standards that apply to new engines under this part.

76. Section 89.1006 is amended byrevising paragraphs (a)(1), (a)(2), (a)(5), and (c)(1) and adding paragraph (a)(6) to read as follows:

§89.1006 Penalties.

(a) * * *

(1) A person who violates §89.1003(a)(1), (a)(4), or (a)(6), or a manufacturer or dealer who violates §89.1003(a)(3)(i), is subject to a civil penalty of not more than $32,500 for each violation.

(2) A person other than a manufacturer or dealer who violates §89.1003(a)(3)(i) or any person who violates §89.1003(a)(3)(ii) is subject to a civil penalty of not more than $2,750 for each violation.

* * * * *

(5) A person who violates §89.1003(a)(2) or (a)(5) is subject to a civil penalty of not more than $32,500 per day of violation.

(6) The maximum penalty values listed in this section are shown for calendar year 2004. Maximum penalty limits for later years may be adjusted based on the Consumer Price Index. The specific regulatory provisions for changing the maximum penalties, published in 40 CFR part 19, reference the applicable U.S. Code citation on which the prohibited action is based.

* * * * *

(c) * * *

(1) Administrative penalty authority. In lieu of commencing a civil action under paragraph (b) of this section, the Administrator may assess any civil penalty prescribed in paragraph (a) of this section, except that the maximum amount of penalty sought against each violator in a penalty assessment proceeding shall not exceed $270,000, unless the Administrator and the Attorney General jointly determine that a matter involving a larger penalty amount is appropriate for administrative penalty assessment. Any such determination by the Administrator and the Attorney General is not subject to judicial review. Assessment of a civil penalty shall be by an order made on the record after opportunity for a hearing held in accordance with the procedures found at part 22 of this chapter. The Administrator may compromise, or remit, with or without conditions, any administrative penalty which may be imposed under this section.

* * * * *

77. A new §89.1009 is added to subpart K to read as follows:

§89.1009 What special provisions apply to branded engines?

The following provisions apply if you identify the name and trademark of another company instead of your own on your emission control information label, as provided by §89.110(b)(2):

(a) You must have a contractual agreement with the other company that obligates that company to take the following

steps:

(1) Meet the emission warranty requirements that apply under this part. This may involve a separate agreement involving reimbursement of warranty-related expenses.

(2) Report all warranty-related information to the certificate holder.

(b) In your application for certification, identify the company whose trademark you will use and describe the arrangements you have made to meet your requirements under this section.

(c) You remain responsible for meeting all the requirements of this chapter, including warranty and defect-reporting provisions.

PART 90— CONTROL OF EMISSIONS FROM NONROAD SPARK-IGNITION ENGINES AT OR BELOW 19 KILOWATTS

78. The authority citation for part 90 is revised to read as follows:

Authority: 42 U.S.C. 7401 - 7671q.

79. Section 90.1 is amended by removing and reserving paragraph (d)(4), revising paragraphs (b) and (d)(5), and adding paragraph (c) to read as follows:

§90.1 Applicability.

* * * * *

(b) In certain cases, the regulations in this part 90 also apply to new engines with a gross power output above 19 kW that would otherwise be covered by 40 CFR part 1048 or 1051. See 40 CFR 1048.615 or 1051.145(a)(3) for provisions related to this allowance.

(c) In certain cases, the regulations in this part 90 apply to new engines below 50 cc used in motorcycles that are motor vehicles. See 40 CFR 86.447-2006 or 86.448-2006 for provisions related to this allowance.

* * * * *

(d) * * *

(5) Engines certified to meet the requirements of 40 CFR part 1048, subject to the provisions of §90.913.

* * * * *

80. Section 90.3 is amended by revising the definition for "United States" and adding definitions for "Amphibious vehicle", "Marine engine", "Marine vessel", and "Maximum engine power" in alphabetical order to read as follows:

§90.3 Definitions.

* * * * *

Amphibious vehicle means a vehicle with wheels or tracks that is designed primarily for operation on land and secondarily for operation in water.

* * * * *

Marine engine means a nonroad engine that is installed or intended to be installed on a marine vessel. This includes a portable auxiliary marine engine only if its fueling, cooling, or exhaust system is an integral part of the vessel. There are two kinds of marine engines:

(1) Propulsion marine engine means a marine engine that moves a vessel through the water or directs the vessel's movement.

(2) Auxiliary marine engine means a marine engine not used for propulsion.

Marine vessel has the meaning given in 1 U.S.C. 3, except that it does not include amphibious vehicles. The definition in 1 U.S.C. 3 very broadly includes every craft capable of being used as a means of transportation on water.

Maximum engine power means gross power.

* * * * *

United States means the States, the District of Columbia, the Commonwealth of Puerto Rico, the Commonwealth of the Northern Mariana Islands, Guam, American Samoa, and the U.S. Virgin Islands.

* * * * *

81. Section 90.301 is amended by revising paragraphs (c) and (d) to read as follows:

§90.301 Applicability.

* * * * *

(c) Additional information about system design, calibration methodologies, and so forth, for raw gas sampling can be found in 40 CFR part 1065. Examples for system design, calibration methodologies, and so forth, for dilute exhaust gas sampling can be found in 40 CFR part 1065.

(d) For Phase 2 Class I, Phase 2 Class I-B, and Phase 2 Class II natural gas fueled engines, use the procedures of 40 CFR part 1065 to measure nonmethane hydrocarbon (NMHC) exhaust emissions from Phase 2 Class I, Phase 2 Class I–B, and Phase 2 Class II natural gas fueled engines.

82. Section 90.308 is amended by revising paragraph (b)(1) to read as follows:

§90.308 Lubricating oil and test fuels.

* * * * *

(b) * * *

(1) The manufacturer must use gasoline having the specifications, or substantially equivalent specifications approved by the Administrator, as specified in Table 3 in Appendix A of this subpart for exhaust emission testing of gasoline fueled engines. As an option, manufacturers may use the fuel specified in 40 CFR part 1065, subpart H, for gasoline-fueled engines.

* * * * *

83. Section 90.316 is amended by revising paragraphs (b)(2)(ii) and (c) introductory text to read as follows:

§90.316 Hydrocarbon analyzer calibration.

* * * * *

(b) * * *

(2) * * *

(ii) The HFID optimization procedures outlined in 40 CFR part 1065, subpart D.

* * * * *

(c) Initial and periodic calibration. Prior to initial use and monthly thereafter, or within one month prior to the certification test, the FID or HFID hydrocarbon analyzer must be calibrated on all normally used instrument ranges using the steps in this paragraph. Use the same flow rate and pressures as when analyzing samples. Introduce calibration gases directly at the analyzer. An optional method for dilute sampling described in 40 CFR part 1065, subpart F, may be used.

* * * * *

84. Section 90.318 is amended by revising paragraph (d) to read as follows:

§90.318 Oxides of nitrogen analyzer calibration.

* * * * *

(d) The initial and periodic interference, system check, and calibration test procedures specified in 40 CFR part 1065, subpart D, may be used in lieu of the procedures specified in this section.

85. Section 90.320 is amended by revising paragraph (b) to read as follows:

§90.320 Carbon dioxide analyzer calibration.

* * * * *

(b) The initial and periodic interference, system check, and calibration test procedures specified in 40 CFR part 1065, subparts C and D, may be used in lieu of the procedures in this section.

86. Section 90.401 is amended by revising paragraph (d) to read as follows:

§90.401 Applicability.

* * * * *

(d) For Phase 2 Class I, Phase 2 Class I-B, and Phase 2 Class II natural gas fueled engines, use the equipment specified in 40 CFR part 1065, subparts D and E, to measure nonmethane hydrocarbon (NMHC) exhaust emissions from Phase 2 Class I, Phase 2 Class I–B, and Phase 2 Class II natural gas fueled engines.

87. Section 90.421 is amended by revising paragraph (b) introductory text, (b)(4)(ii), and (b)(4)(iii) to read as follows:

§90.421 Dilute gaseous exhaust sampling and analytical system description.

* * * * *

(b) Component description. The components necessary for exhaust sampling must meet the following requirements:

* * *

(4) * * *

(ii) Conform to the continuous NOX, CO, or CO2 sampling and analysis system to the specifications of 40 CFR 1065.145, with the following exceptions and revisions:

(A) Heat the system components requiring heating only to prevent water condensation, the minimum component temperature is 55 °C.

(B) Coordinate analysis system response time with CVS flow fluctuations and sampling time/test cycle offsets to meet the time-alignment and dispersion specifications in 40 CFR pat 1065, subpart C.

(C) Use only analytical gases conforming to the specifications of 40 CFR 1065.750 for calibration, zero and span checks.

(D) Use a calibration curve conforming to 40 CFR part 1065, subparts C and D, for CO, CO2, and NOX for any range on a linear analyzer below 155 ppm.

(iii) Convert the chart deflections or voltage output of analyzers with non-linear calibration curves to concentration values by the calibration curve(s) specified in 40 CFR part 1065, subpart D, before flow correction (if used) and subsequent integration takes place.

88. Section 90.613 is amended by revising paragraph (d) to read as follows:

§90.613 Prohibited acts; penalties.

* * * * *

(d) An importer who violates section 213(d) and section 203 of the Act is subject to a civil penalty under section 205 of the Act of not more than $32,500 for each engine subject to the violation. In addition to the penalty provided in the Act, where applicable, under the exemption provisions of §90.612(b), a person or entity who fails to deliver the engine to the U.S. Customs Service is liable for liquidated damages in the amount of the bond required by applicable Customs laws and regulations. The maximum penalty value listed in this paragraph (d) is shown for calendar year 2004. Maximum penalty limits for later years may be adjusted based on the Consumer Price Index. The specific regulatory provisions for changing the maximum penalties, published in 40 CFR part 19, reference the applicable U.S. Code citation on which the prohibited action is based.

89. A new §90.913 is added to subpart J to read as follows:

§90.913 Exemption for engines certified to standards for Large SI engines.

(a) An engine is exempt from the requirements of this part if it is in an engine family that has a valid certificate of conformity showing that it meets emission standards and other requirements under 40 CFR part 1048 for the appropriate model year.

(b) The only requirements or prohibitions from this part that apply to an engine that is exempt under this section are in this section.

(c) If your engines do not have the certificate required in paragraph (a) of this section, they will be subject to the provisions of this part. Introducing these engines into commerce without a valid exemption or certificate of conformity violates the prohibitions in §90.1003.

(d) Engines exempted under this section are subject to all the requirements affecting engines under 40 CFR part 1048. The requirements and restrictions of 40 CFR part 1048 apply to anyone manufacturing these engines, anyone manufacturing equipment that uses these engines, and all other persons in the same manner as if these were nonroad spark-ignition engines above 19 kW.

(e) Engines exempted under this section may not generate or use emission credits under this part 90.

90. Section 90.1006 is amended by revising paragraphs (a)(1), (a)(2), (a)(5), and (c)(1) and adding paragraph (a)(6) to read as follows:

§90.1006 Penalties.

(a) * * *

(1) A person who violates §90.1003(a)(1), (a)(4), or (a)(5), or a manufacturer or dealer who violates §90.1003(a)(3)(i), is subject to a civil penalty of not more than $32,500 for each violation.

(2) A person other than a manufacturer or dealer who violates §90.1003(a)(3)(i) or any person who violates §90.1003(a)(3)(ii) is subject to a civil penalty of not more than $2,750 for each violation.

* * * * *

(5) A person who violates §90.1003(a)(2) or (a)(6) is subject to a civil penalty of not more than $32,500 per day of violation.

(6) The maximum penalty values listed in this section are shown for calendar year 2004. Maximum penalty limits for later years may be adjusted based on the Consumer Price Index. The specific regulatory provisions for changing the maximum penalties, published in 40 CFR part 19, reference the applicable U.S. Code citation on which the prohibited action is based.

* * * * *

(c) * * *

(1) Administrative penalty authority. In lieu of commencing a civil action under paragraph (b) of this section, the Administrator shall assess any civil penalty prescribed in paragraph (a) of this section, except that the maximum amount of penalty sought against each violator in a penalty assessment proceeding can not exceed $270,000, unless the Administrator and the Attorney General jointly determine that a matter involving a larger penalty amount is appropriate for administrative penalty assessment. Any such determination by the Administrator and the Attorney General is not subject to judicial review. Assessment of a civil penalty is made by an order made on the record after opportunity for a hearing held in accordance with the procedures found at part 22 of this chapter. The Administrator may compromise, or remit, with or without conditions, any administrative penalty which may be imposed under this section.

* * * * *

PART 91— CONTROL OF EMISSIONS FROM MARINE SPARK-IGNITION ENGINES

91. The authority citation for part 91 is revised to read as follows:

Authority: 42 U.S.C. 7401 - 7671q.

92. Section 91.3 is amended by revising the definitions for "Marine spark-ignition engine", "Marine vessel", and "United States", adding definitions for "Amphibious vehicle", "Marine engine", and "Spark-ignition" in alphabetical order to read as follows:

§91.3 Definitions.

* * * * *

Amphibious vehicle means a vehicle with wheels or tracks that is designed primarily for operation on land and secondarily for operation in water.

* * * * *

Marine engine means a nonroad engine that is installed or intended to be installed on a marine vessel. This includes a portable auxiliary marine engine only if its fueling, cooling, or exhaust system is an integral part of the vessel. There are two kinds of marine engines:

(1) Propulsion marine engine means a marine engine that moves a vessel through the water or directs the vessel's movement.

(2) Auxiliary marine engine means a marine engine not used for propulsion.

Marine spark-ignition engine means a spark-ignition marine engine that propels a marine vessel.

* * * * *

Marine vessel has the meaning given in 1 U.S.C. 3, except that it does not include amphibious vehicles. The definition in 1 U.S.C. 3 very broadly includes every craft capable of being used as a means of transportation on water.

* * * * *

Spark-ignition means relating to a gasoline-fueled engine or any other type of engine with a spark plug (or other sparking device) and with operating characteristics significantly similar to the theoretical Otto combustion cycle. Spark-ignition engines usually use a throttle to regulate intake air flow to control power during normal operation.

* * * * *

United States means the States, the District of Columbia, the Commonwealth of Puerto Rico, the Commonwealth of the Northern Mariana Islands, Guam, American Samoa, and the U.S. Virgin Islands.

* * * * *

93. Section 91.301 is amended by revising paragraph (c) to read as follows:

§91.301 Scope; applicability.

* * * * *

(c) Additional information about system design, calibration methodologies, and so forth, for raw gas sampling can be found in 40 CFR part 1065. Examples for system design, calibration methodologies, and so forth, for dilute sampling can be found in 40 CFR part 1065.

94. Section 91.316 is amended by revising paragraphs (b)(2)(ii) and (c) to read as follows:

§91.316 Hydrocarbon analyzer calibration.

* * * * *

(b) * * *

(2) * * *

(ii) The HFID optimization procedures outlined in 40 CFR part 1065, subpart D.

* * * * *

(c) Initial and periodic calibration. Prior to introduction into service and monthly thereafter, or within one month prior to the certification test, calibrate the FID or HFID hydrocarbon analyzer on all normally used instrument ranges, using the steps in this paragraph. Use the same flow rate and pressures as when analyzing samples. Introduce

calibration gases directly at the analyzer. An optional method for dilute sampling described in 40 CFR part 1065, subpart F, may be used.

* * * * *

95. Section 91.318 is amended by revising paragraph (d) to read as follows:

§91.318 Oxides of nitrogen analyzer calibration.

*****

(d) The initial and periodic interference, system check, and calibration test procedures specified in 40 CFR part 1065, subparts C and D, may be used in lieu of the procedures specified in this section.

96. Section 91.320 is amended by revising paragraph (b) to read as follows:

§91.320 Carbon dioxide analyzer calibration.

* * * * *

(b) The initial and periodic interference, system check, and calibration test procedures specified in 40 CFR part 1065, subparts C and D, may be used in lieu of the procedures in this section.

97. Section 91.419 is amended by revising the entry defining "M_{HCexh}" in paragraph (b) to read as follows:

§91.419 Raw emission sampling calculations.

* * * * *

(b) * * *

M_{HCexh} = Molecular weight of hydrocarbons in the exhaust; see the following equation:

$$M_{HCexh} = 12.01 + 1.008 \times \alpha$$

* * * * *

98. Section 91.421 is amended by revising paragraph (b)(4)(ii) and (b)(4)(iii) to read as follows:

§91.421 Dilute gaseous exhaust sampling and analytical system description.

* * * * *

(b) * * *

(4) * * *

(ii) Conform to the continuous NOX, CO, or CO2 sampling and analysis system to the specifications of 40 CFR 1065.145, with the following exceptions and revisions:

(A) Heat the system components requiring heating only to prevent water condensation, the minimum component temperature is 55 °C.

(B) Coordinate analysis system response time with CVS flow fluctuations and sampling time/test cycle offsets to meet the time-alignment and dispersion specifications in 40 CFR pat 1065, subpart C.

(C) Use only analytical gases conforming to the specifications of 40 CFR 1065.750 for calibration, zero, and span checks.

(D) Use a calibration curve conforming to 40 CFR part 1065, subparts C and D, for CO, CO2, and NOX for any range on a linear analyzer below 155 ppm.

(iii) Convert the chart deflections or voltage output of analyzers with non-linear calibration curves to concentration values by the calibration curve(s) specified in 40 CFR part 1065, subpart D, before flow correction (if used) and subsequent integration takes place.

* * * * *

99. Section 91.705 is amended by revising paragraph (d) to read as follows:

§91.705 Prohibited acts; penalties.

* * * * *

(d) An importer who violates §91.1103(a)(1), section 213(d) and section 203 of the Act is subject to a civil penalty under §91.1106 and section 205 of the Act of not more than $32,500 for each marine engine subject to the violation. In addition to the penalty provided in the Act, where applicable, a person or entity who imports an engine under the exemption provisions of §91.704(b) and, who fails to deliver the marine engine to the U.S. Customs Service by the end of the period of conditional admission is liable for liquidated damages in the amount of the bond required by applicable Customs laws and regulations. The maximum penalty value listed in this paragraph (d) is shown for calendar year 2004. Maximum penalty limits for later years may be adjusted based on the Consumer Price Index. The specific regulatory provisions for changing the maximum penalties, published in 40 CFR part 19, reference the applicable U.S. Code citation on which the prohibited action is based.

100. Section 91.1106 is amended by revising paragraphs (a)(1), (a)(2), (a)(5), and (c)(1) and adding paragraph (a)(6) to read as follows:

§91.1106 Penalties.

(a) * * *

(1) A person who violates §91.1103 (a)(1), (a)(4), or (a)(5), or a manufacturer or dealer who violates §91.1103(a)(3)(i), is subject to a civil penalty of not more than $32,500 for each violation.

(2) A person other than a manufacturer or dealer who violates §91.1103(a)(3)(i) or any person who violates §91.1103(a)(3)(ii) is subject to a civil penalty of not more than $2,750 for each violation.

* * * * *

(5) A person who violates §91.1103 (a)(2) or (a)(6) is subject to a civil penalty of not more than $32,500 per day of violation.

(6) The maximum penalty values listed in this section are shown for calendar year 2004. Maximum penalty limits for later years may be adjusted based on the Consumer Price Index. The specific regulatory provisions for changing the maximum penalties, published in 40 CFR part 19, reference the applicable U.S. Code citation on which the prohibited action is based.

* * * * *

(c) * * *

(1) Administrative penalty authority. In lieu of commencing a civil action under paragraph (b) of this section, the Administrator shall assess any civil penalty prescribed in paragraph (a) of this section, except that the maximum amount of penalty sought against each violator in a penalty assessment proceeding can not exceed $270,000, unless the Administrator and the Attorney General jointly determine that a matter involving a larger penalty amount is appropriate for administrative penalty assessment. Any such determination by the Administrator and the Attorney General is not subject to judicial review. Assessment of a civil penalty is made by an order made on the record after opportunity for a hearing held in accordance with the procedures found at part 22 of this chapter. The Administrator may compromise, or remit, with or without conditions, any administrative penalty which may be imposed under this section.

* * * * *

PART 92— Control of Air Pollution from Locomotives and Locomotive Engines

101. The authority citation for part 92 is revised to read as follows:

Authority: 42 U.S.C. 7401 - 7671q.

102. Section 92.1 is amended by revising paragraphs (a) introductory text, (b)(3), and (b)(4) and adding paragraph (d) to read as follows:

§92.1 Applicability.

(a) Except as noted in paragraphs (b) and (d) of this section, the provisions of this part apply to manufacturers, remanufacturers, owners and operators of:

* * * * *

(b) * * *

(3) Locomotive engines which provide only hotel power (see 40 CFR part 89 and 1039 to determine if such engines are subject to EPA emission requirements); or

(4) Nonroad vehicles excluded from the definition of locomotive in §92.2, and the engines used in such nonroad vehicles (see 40 CFR parts 86, 89, and 1039 to determine if such vehicles or engines are subject to EPA emission requirements).

* * * * *

(d) The provisions of subpart L of this part apply to all persons.

103. Section 92.2 is amended in paragraph (b) by revising the definitions for "Calibration", paragraph (5) of the definition for "New locomotive or new locomotive engine", "Repower", and "United States" to read as follows:

§92.2 Definitions.

* * * * *

(b) * * *

* * * * *

Calibration means the set of specifications, including tolerances, specific to a particular design, version, or application of a component, or components, or assembly capable of functionally describing its operation over its working range. This definition does apply to Subpart B of this part.

* * * * *

New locomotive or new locomotive engine means: * * *

(5) Notwithstanding paragraphs (1) through (3) of this definition, locomotives and locomotive engines which are owned by a small railroad and which have never been manufactured or remanufactured into a certified configuration are not new.

* * * * *

Repower means replacement of the engine in a previously used locomotive with a freshly manufactured locomotive engine. Replacing a locomotive engine with a freshly manufactured locomotive engine in a locomotive that has a refurbished or reconditioned chassis such that less than 25 percent of the parts of the locomotive were previously used (as weighted by dollar value) is not repowering.

* * * * *

United States means the States, the District of Columbia, the Commonwealth of Puerto Rico, the Commonwealth of the Northern Mariana Islands, Guam, American Samoa, and the U.S. Virgin Islands.

* * * * *

104. Section 92.109 is amended by revising paragraph(c)(3) to read as follows:

§92.109 Analyzer specifications.

* * * * *

(c) * * *

(3) Alcohols and Aldehydes. The sampling and analysis procedures for alcohols and aldehydes, where applicable, shall be approved by the Administrator prior to the start of testing. Procedures are allowed if they are consistent the general requirements of 40 CFR part 1065, subpart I, for sampling and analysis of alcohols and aldehydes, and with good engineering practice.

* * * * *

105. Section 92.114 is amended by revising paragraphs (d)(2) introductory text and (e)(1) to read as follows:

§ 92.114 Exhaust gas and particulate sampling and analytical system.

* * * * *

(d) * * *

(2) For engine testing, either a locomotive-type or a facility-type exhaust system (or a combination system) may be used. The exhaust backpressure for engine testing shall be set between 90 and 100 percent of the maximum backpressure that will result with the exhaust systems of the locomotives in which the engine will be used. Backpressure less than 90 percent of the maximum value is also allowed, provided the backpressure is within 0.07 psi of the maximum value. The facility-type exhaust system shall meet the following requirements:

* * * * *

(e) * * *

(1) Dilution of the exhaust prior to sampling is allowed for gaseous emissions. The equipment and methods used for dilution, sampling and analysis shall comply with the requirements of 40 CFR part 1065, with the following exceptions and additional requirements:

(i) Proportional sampling and heat exchangers are not required;

(ii) Larger minimum dimensions for the dilution tunnel(s) shall be specified by the Administrator;

(iii) Other modifications may be made with written approval from the Administrator.

* * * * *

106. Section 92.123 is amended by revising paragraph (a)(2)(ii) to read as follows:

§92.123 Test procedure; general requirements.

(a) * * *

(2) * * *

(ii) None of the measured opacity values for the stack tested are greater than three-quarters of the level allowed by any of the applicable smoke standards.

* * * * *

107. Section 92.124 is amended by revising paragraph (f) to read as follows:

§92.124 Test sequence; general requirements.

* * * * *

(f) The required test sequence is described in Table B124-1 of this section, as follows:

Table B124-1

TEST SEQUENCE FOR LOCOMOTIVES AND LOCOMOTIVE ENGINES				
Mode Number	Notch Setting	Time in Notch	Emissions Measured**	Power, and Fuel Consumption Measured
Warmup	Notch 8	5 ± 1 min	None	None
Warmup	Lowest Idle	15 min maximum (after engine speed reaches lowest idle speed)	None	None
1a	Low Idle*	6 min minimum	All	Both
1	Normal Idle	6 min minimum	All	Both
2	Dynamic Brake*	6 min minimum	All	Both
3	Notch 1	6 min minimum	All	Both
4	Notch 2	6 min minimum	All	Both
5	Notch 3	6 min minimum	All	Both
6	Notch 4	6 min minimum	All	Both
7	Notch 5	6 min minimum	All	Both
8	Notch 6	6 min minimum	All	Both
9	Notch 7	6 min minimum	All	Both
10	Notch 8	15 min minimum	All	Both

* Omit if not so equipped.
** The EPA test sequence for locomotives and locomotive engines may be performed once, with gaseous, particulate and smoke measurements performed simultaneously, or it may be performed twice with gaseous, and particulate measurements performed during one test sequence and smoke measurements performed during the other test sequence.

108. Section 92.132 is amended by revising paragraphs (b)(3)(iii)(D)(2) and (d) to read as follows:

§92.132 Calculations.

* * * * *

(b) * * *

(3) * * *

(iii) * * *

(D) * * *

(2) If a CO instrument that meets the criteria specified in 40 CFR part 1065, subpart C, is used without a sample dryer according to 40 CFR 1065.145, CO_{em} must be substituted directly for CO_e and CO_{dm} must be substituted directly for CO_d.

* * * * *

(d) NOx correction factor. (1) NOx emission rates ($M_{NOx\ mode}$) shall be adjusted to account for the effects of humidity and temperature by multiplying each emission rate by K_{NOx}, which is calculated from the following equations:

$$K_{NOx} = (K)(1 + (0.25(\log K)^2)^{1/2})$$

$$K = (K_H)(K_T)$$

$$K_H = [C_1+C_2\exp((-0.0143)(10.714))]/[C_1+C_2\exp((-0.0143)(1000H))]$$

$$C_1 = -8.7 +164.5\exp(-0.0218(A/F)_{wet})$$

$C_2 = 130.7 + 3941\exp(-0.0248(A/F)_{wet})$

Where:

$(A/F)_{wet}$ = Mass of moist air intake divided by mass of fuel intake.

$K_T = 1/[1-0.0107(T_{30}-T_A)]$ for tests conducted at ambient temperatures below 30°C.

$K_T = 1.00$ for tests conducted at ambient temperatures at or above 30°C.

T_{30} = The measured intake manifold air temperature in the locomotive when operated at 30°C (or 100°C, where intake manifold air temperature is not available).

T_A = The measured intake manifold air temperature in the locomotive as tested (or the ambient temperature (°C), where intake manifold air temperature is not available).

* * * * *

109. Section 92.203 is amended by revising paragraph (d)(1)(i) to read as follows:

§92.203 Application for certification.

* * * * *

(d) Required content. Each application must include the following information:

(1)(i) A description of the basic engine design including, but not limited to, the engine family specifications, the provisions of which are contained in § 92.204;

* * * * *

110. Section 92.205 is amended by revising paragraph (a) to read as follows:

§92.205 Prohibited controls, adjustable parameters.

(a) Any system installed on, or incorporated in, a new locomotive or new locomotive engine to enable such locomotive or locomotive engine to conform to standards contained in this part:

* * * * *

111. Section 92.208 is amended by revising paragraph (a) to read as follows:

§92.208 Certification.

(a) Paragraph (a) of this section applies to manufacturers of new locomotives and new locomotive engines. If, after a review of the application for certification, test reports and data acquired from a freshly manufactured locomotive or locomotive engine or from a development data engine, and any other information required or obtained by EPA, the Administrator determines that the application is complete and that the engine family meets the requirements of the Act and this part, he/she will issue a certificate of conformity with respect to such engine family except as provided by paragraph (c)(3) of this section. The certificate of conformity is valid for each engine family from the date of issuance by EPA until 31 December of the model year or calendar year for which it is issued and upon such terms and conditions as the Administrator deems necessary or appropriate to assure that the production locomotives or engines covered by the certificate will meet the requirements of the Act and of this part.

* * * * *

112. Section 92.210 is amended by revising paragraphs (b)(1), (b)(2), (d)(2), and (d)(3) to read as follows:

§92.210 Amending the application and certificate of conformity.

* * * * *

(b) A manufacturer's or remanufacturer's request to amend the application or the existing certificate of conformity shall include the following information:

(1) A full description of the change to be made in production, or of the locomotives or engines to be added;

(2) Engineering evaluations or data showing that the locomotives or engines as modified or added will comply

with all applicable emission standards; and

* * * * *

(d) * * *

(2) If the Administrator determines that the change or new locomotive(s) or engine(s) meets the requirements of this part and the Act, the appropriate certificate of conformity shall be amended.

(3) If the Administrator determines that the changed or new locomotive(s) or engine(s) does not meet the requirements of this part and the Act, the certificate of conformity will not be amended. The Administrator shall provide a written explanation to the manufacturer or remanufacturer of the decision not to amend the certificate. The manufacturer or remanufacturer may request a hearing on a denial.

* * * * *

113. Section 92.212 is amended by revising paragraphs (b)(2)(v)(G), (c)(2)(v)(A), and(c)(2)(v)(D)(2) to read as follows:

§92.212 Labeling.

* * * * *

(b) * * *

(2) * * *

(v) * * *

(G) The standards and/or FELs to which the locomotive was certified.

(c) * * *

(2) * * *

(v) * * *

(A) The label heading: Engine Emission Control Information.

* * * * *

(D) * * *

(2) This locomotive and locomotive engine conform to U.S. EPA regulations applicable to locomotives and locomotive engines originally manufactured on or after January 1, 2002 and before January 1, 2005; or

* * * * *

114. Section 92.215 is amended by revising paragraphs (a)(2)(i)(A) and (b) to read as follows:

§92.215 Maintenance of records; submittal of information; right of entry.

(a) * * *

(2) * * *

(i) * * *

(A) In the case where a current production engine is modified for use as a certification engine or in a certification locomotive, a description of the process by which the engine was selected and of the modifications made. In the case where the certification locomotive or the engine for a certification locomotive is not derived from a current production engine, a general description of the buildup of the engine (e.g., whether experimental heads were cast and machined according to supplied drawings). In the cases in the previous two sentences, a description of the origin and selection process for fuel system components, ignition system components, intake-air pressurization and cooling-system components, cylinders, pistons and piston rings, exhaust smoke control system components, and exhaust aftertreatment devices as applicable, shall be included. The required descriptions shall specify the steps taken to assure that the certification locomotive or certification locomotive engine, with respect to its engine, drivetrain, fuel system, emission-control system components, exhaust aftertreatment devices, exhaust smoke control system components or any other devices or components as applicable, that can reasonably be expected to influence exhaust emissions will be representative of production

locomotives or locomotive engines and that either: all components and/or locomotive or engine, construction processes, component inspection and selection techniques, and assembly techniques employed in constructing such locomotives or engines are reasonably likely to be implemented for production locomotives or engines; or that they are as close as practicable to planned construction and assembly process.

* * * * *

(b) The manufacturer or remanufacturer of any locomotive or locomotive engine subject to any of the standards prescribed in this part shall submit to the Administrator, at the time of issuance by the manufacturer or remanufacturer, copies of all instructions or explanations regarding the use, repair, adjustment, maintenance, or testing of such locomotive or engine, relevant to the control of crankcase, or exhaust emissions issued by the manufacturer or remanufacturer, for use by other manufacturers or remanufacturers, assembly plants, distributors, dealers, owners and operators. Any material not translated into the English language need not be submitted unless specifically requested by the Administrator.

* * * * *

115. Section 92.216 is amended by removed by removing and reserving paragraph (a)(2).

116. Section 92.512 is amended by revising paragraph (e) to read as follows:

§92.512 Suspension and revocation of certificates of conformity.

* * * * *

(e) The Administrator shall notify the manufacturer or remanufacturer in writing of any suspension or revocation of a certificate of conformity in whole or in part; a suspension or revocation is effective upon receipt of such notification or thirty days from the time an engine family is deemed to be in noncompliance under §§ 92.508(d), 92.510(a), 92.510(b) or 92.511(f), whichever is earlier, except that the certificate is immediately suspended with respect to any failed locomotives or locomotive engines as provided for in paragraph (a) of this section.

* * * * *

117. Section 92.906 is amended by revising paragraph (a) introductory text to read as follows:

§92.906 Manufacturer-owned, remanufacturer-owned exemption and display exemption.

(a) Any manufacturer-owned or remanufacturer-owned locomotive or locomotive engine is exempt from §92.1103, without application, if the manufacturer complies with the following terms and conditions:

* * * * *

118. Section 92.1106 is amended by revising paragraphs (a)(1), (a)(2), (a)(5), and (c)(1) and adding paragraph (a)(6) to read as follows:

§92.1106 Penalties.

(a) * * *

(1) A person who violates §92.1103 (a)(1), (a)(4), or (a)(5), or a manufacturer, remanufacturer, dealer or railroad who violates §92.1103(a)(3)(i) or (iii) is subject to a civil penalty of not more than $32,500 for each violation.

(2) A person other than a manufacturer, remanufacturer, dealer, or railroad who violates §92.1103(a)(3)(i) or any person who violates §92.1103(a)(3)(ii) is subject to a civil penalty of not more than $2,750 for each violation.

* * * * *

(5) A person who violates §92.1103(a)(2) is subject to a civil penalty of not more than $32,500 per day of violation.

(6) The maximum penalty values listed in this section are shown for calendar year 2004. Maximum penalty

limits for later years may be adjusted based on the Consumer Price Index. The specific regulatory provisions for changing the maximum penalties, published in 40 CFR part 19, reference the applicable U.S. Code citation on which the prohibited action is based.

* * * * *

(c) * * *

(1) Administrative penalty authority. In lieu of commencing a civil action under paragraph (b) of this section, the Administrator may assess any civil penalty prescribed in paragraph (a) of this section, except that the maximum amount of penalty sought against each violator in a penalty assessment proceeding shall not exceed $270,000, unless the Administrator and the Attorney General jointly determine that a matter involving a larger penalty amount is appropriate for administrative penalty assessment. Any such determination by the Administrator and the Attorney General is not subject to judicial review. Assessment of a civil penalty shall be by an order made on the record after opportunity for a hearing held in accordance with the procedures found at part 22 of this chapter. The Administrator may compromise, or remit, with or without conditions, any administrative penalty which may be imposed under this section.

* * * * *

119. Appendix IV to part 92 is amended by revising paragraph (d)(1) to read as follows:

Appendix IV to Part 92 - Guidelines for Determining Equivalency Between Emission Measurement Systems

* * * * *

(d) Minimum number of tests. The recommended minimum number of tests with each system necessary to determine equivalency is:

(1) Four 10-mode locomotive or locomotive engine tests, conducted in accordance with the provisions of Subpart B of this part; or

* * * * *

PART 94—CONTROL OF AIR POLLUTION FROM MARINE COMPRESSION-IGNITION ENGINES

120. The authority citation for part 94 is revised to read as follows:

Authority: 42 U.S.C. 7401 - 7671q.

121. Section 94.2 is amended in paragraph (b) by revising the definitions of "Marine vessel", "marine engine", and "United States" and adding a definition of "Amphibious vehicle" in alphabetical order to read as follows:

§94.2 Definitions.

* * * * *

Amphibious vehicle means a vehicle with wheels or tracks that is designed primarily for operation on land and secondarily for operation in water.

* * * * *

Marine engine means a nonroad engine that is installed or intended to be installed on a marine vessel. This includes a portable auxiliary marine engine only if its fueling, cooling, or exhaust system is an integral part of the vessel. There are two kinds of marine engines:

(1) Propulsion marine engine means a marine engine that moves a vessel through the water or directs the vessel's movement.

(2) Auxiliary marine engine means a marine engine not used for propulsion.

Marine vessel has the meaning given in 1 U.S.C. 3, except that it does not include amphibious vehicles. The definition in 1 U.S.C. 3 very broadly includes every craft capable of being used as a means of transportation on water.

* * * * *

United States means the States, the District of Columbia, the Commonwealth of Puerto Rico, the

Commonwealth of the Northern Mariana Islands, Guam, American Samoa, and the U.S. Virgin Islands.
* * * * *

122. Section 94.107 is amended by revising paragraph (b) to read as follows:

§94.107 Determination of maximum test speed.

* * * * *

(b) Generation of lug curve. Prior to beginning emission testing, generate maximum measured brakepower versus engine speed data points using the applicable method specified in 40 CFR 1065.510. These data points form the lug curve. It is not necessary to generate the entire lug curve. For the portion of the curve where power increases with increasing speed, it is not necessary to generate points with power less than 90 percent of the maximum power value. For the portion of the curve where power decreases with increasing speed, it is not necessary to generate points with power less than 75 percent of the maximum power value.

123. Section 94.109 is amended by revising paragraph (b) to read as follows:

§94.109 Test procedures for Category 3 marine engines.

* * * * *

(b) Analyzers meeting the specifications of either 40 CFR part 1065, subpart C, or ISO 8178–1 (incorporated by reference in §94.5) shall be used to measure THC and CO.

* * * * *

124. Section 94.904 is amended by adding a new paragraph (c) to read as follows:

§94.904 Exemptions.

* * * * *

(c) If you want to take an action with respect to an exempted or excluded engine that is prohibited by the exemption or exclusion, such as selling it, you need to certify the engine. We will issue a certificate of conformity if you send us an application for certification showing that you meet all the applicable requirements from this part 94 and pay the appropriate fee. Also, in some cases, we may allow manufacturers to modify the engine as needed to make it identical to engines already covered by a certificate. We would base such an approval on our review of any appropriate documentation. These engines must have emission control information labels that accurately describe their status.

125. Section 94.907 is amended by revising paragraphs (a), (b), (c), (d) introductory text, (d)(1)(ii), (d)(2), (d)(3)(i), (d)(4), and (g) and adding introductory text to paragraph (h) to read as follows:

§94.907 Engine dressing exemption.

(a) General provisions. If you are an engine manufacturer, this section allows you to introduce new marine engines into commerce if they are already certified to the requirements that apply to compression-ignition engines under 40 CFR parts 85 and 86 or 40 CFR part 89, 92 or 1039 for the appropriate model year. If you comply with all the provisions of this section, we consider the certificate issued under 40 CFR part 86, 89, 92, or 1039 for each engine to also be a valid certificate of conformity under this part 94 for its model year, without a separate application for certification under the requirements of this part 94.

(b) Boat builder provisions. If you are not an engine manufacturer, you may install an engine certified for the appropriate model year under 40 CFR part 86, 89, 92, or 1039 in a marine vessel as long as the engine has been properly labeled as specified in paragraph (d)(5) of this section and you do not make any of the changes described in paragraph (d)(3) of this section. If you modify the non-marine engine in any of the ways described in paragraph (d)(3) of this section, we will consider you a manufacturer of a new marine engine. Such engine modifications prevent you from using the provisions of this section.

(c) Liability. Engines for which you meet the requirements of this section are exempt from all the requirements and prohibitions of this part, except for those specified in this section. Engines exempted under this section must meet all the applicable requirements from 40 CFR parts 85 and 86 or 40 CFR part 89, 92, or 1039. This paragraph (c) applies to engine manufacturers, boat builders who use such an engine, and all other persons as if the engine were used in its originally intended application. The prohibited acts of §94.1103(a)(1) apply to these new engines and vessels; however, we consider the certificate issued under 40 CFR part 86, 89, 92, or 1039 for each engine to also be a valid certificate of conformity under this part 94 for its model year. If we make a determination that these engines do not conform to the regulations during their useful life, we may require you to recall them under this part 94 or under 40 CFR part 85, 89, 92, or 1039.

(d) Specific requirements. If you are an engine manufacturer and meet all the following criteria and requirements regarding your new marine engine, the engine is eligible for an exemption under this section:

(1) * * *

(ii) Land-based nonroad diesel engines (40 CFR part 89 or 1039).

* * * * *

(2) The engine must have the label required under 40 CFR part 86, 89, 92, or 1039.

* * * * *

(3) * * *

(i) Change any fuel system parameters from the certified configuration, or change, remove, or fail to properly install any other component, element of design, or calibration specified in the engine manufacturer's application for certification. This includes aftertreatment devices and all related components.

* * * * *

(4) You must show that fewer than 50 percent of the engine model's total sales for the model year, from all companies, are used in marine applications, as follows:

(i) If you are the original manufacturer of the engine, base this showing on your sales information.

(ii) In all other cases, you must get the original manufacturer of the engine to confirm this based on its sales information.

* * * * *

(g) Failure to comply. If your engines do not meet the criteria listed in paragraph (d) of this section, they will be subject to the standards, requirements, and prohibitions of this part 94 and the certificate issued under 40 CFR part 86, 89, 92, or 1039 will not be deemed to also be a certificate issued under this part 94. Introducing these engines into commerce without a valid exemption or certificate of conformity under this part violates the prohibitions in 40 CFR 94.1103(a)(1).

(h) Data submission. * * *

* * * * *

(i) Participation in averaging, banking and trading. Engines adapted for marine use under this section may not generate or use emission credits under this part 94. These engines may generate credits under the ABT provisions in 40 CFR part 86, 89, 92, or 1039, as applicable. These engines must use emission credits under 40 CFR part 86, 89, 92, or 1039 as applicable if they are certified to an FEL that exceeds an applicable standard.

126. A new §94.912 is added to subpart J to read as follows:

§94.912 Optional certification to land-based standards for auxiliary marine engines.

(a) If an engine meets all the following criteria, it is exempt from the requirements of this part:

(1) The marine engines must be identical in all material respects to a land-based engine covered by a valid certificate of conformity for the appropriate model year showing that it meets emission standards for engines of that power rating under 40 CFR part 89 or 1039.

(2) The engines may not be used as propulsion marine engines.

(3) The engines must have the emission control information label we require in 40 CFR 89.110 or 40 CFR 1039.135, including additional information to identify the engine as certified also for auxiliary marine

applications.

(4) The number of auxiliary marine engines from the engine family must be smaller than the number of land-based engines from the engine family.

(5) In your application for certification, you must identify your plans to produce engines for both land-based and auxiliary marine applications, including projected sales of marine engines. If the projected marine sales are substantial, we may ask for the year-end report of production volumes to include actual auxiliary marine engine sales.

(b) The only requirements or prohibitions from this part that apply to an engine that is exempt under this section are in this section.

(c) If your engines do not meet the criteria listed in paragraph (a) of this section, they will be subject to all the requirements and prohibitions of this part. Introducing these engines into commerce without a valid exemption or certificate of conformity violates the prohibitions in §94.1103.

(d) Engines exempted under this section are subject to all the requirements affecting engines under 40 CFR part 89 or 1039. The requirements and restrictions of 40 CFR part 89 or 1039 apply to anyone manufacturing these engines, anyone manufacturing equipment that uses these engines, and all other persons in the same manner as if these were land-based nonroad diesel engines.

(e) If you produce marine engines under the provisions of this section, include them in your emission-credit calculations in 40 CFR part 89 or 1039, as applicable. Do not count these marine engines in emission-credit calculations under 40 CFR part 94.

(f) The requirements for vessel manufacturers, owners, and operators in subpart K of this part apply to these engines whether they are certified under this part 94 or another part as allowed by this section.

127. Section 94.1001 is revised to read as follows:

§94.1001 Applicability.

The requirements of this subpart are applicable to manufacturers, owners, and operators of marine vessels that contain engines with per-cylinder displacement of at least 2.5 liters subject to the provisions of subpart A of this part, except as otherwise specified.

128. Section 94.1103 is amended by redesignating (b)(3)(iv) as (b)(3)(vii), revising paragraph (b)(3)(ii) and (b)(3)(iii), and adding paragraphs (b)(3)(iv) and (b)(3)(viii) to read as follows:

§94.1103 Prohibited acts.

* * * * *

(b) * * *

(3) * * *

(ii) The engine manufacturer or its agent takes ownership and possession of the engine being replaced or confirms that the engine has been destroyed; and

(iii) If the engine being replaced was not certified to any emission standards under this part, the replacement engine must have a permanent label with your corporate name and trademark and the following language, or similar alternate language approved by the Administrator:

THIS ENGINE DOES NOT COMPLY WITH U.S. EPA MARINE EMISSION REQUIREMENTS. SELLING OR INSTALLING THIS ENGINE FOR ANY PURPOSE OTHER THAN TO REPLACE A MARINE ENGINE BUILT BEFORE JANUARY 1, [Insert appropriate year reflecting when the earliest tier of standards began to apply to engines of that size and type] MAY BE A VIOLATION OF FEDERAL LAW SUBJECT TO CIVIL PENALTY.

(iv) If the engine being replaced was certified to emission standards less stringent than those in effect when you produce the replacement engine, the replacement engine must have a permanent label with your corporate name and trademark and the following language, or similar alternate language approved by the Administrator:

THIS ENGINE COMPLIES WITH U.S. EPA MARINE EMISSION REQUIREMENTS UNDER THE PROVISIONS OF 40 CFR 94.1103(b)(3). SELLING OR INSTALLING THIS ENGINE FOR ANY PURPOSE OTHER THAN TO REPLACE A MARINE ENGINE BUILT BEFORE JANUARY 1, [Insert appropriate year reflecting when the next tier of emission standards began to apply] MAY BE A VIOLATION OF FEDERAL LAW SUBJECT TO CIVIL PENALTY.

* * * * *

(viii) The provisions of this section may not be used to circumvent emission standards that apply to new engines under this part.

129. Section 94.1106 is amended by revising the introductory text and paragraphs (a)(1), (a)(2), and (c)(1) to read as follows:

§94.1106 Penalties.

This section specifies actions that are prohibited and the maximum civil penalties that we can assess for each violation. The maximum penalty values listed in paragraphs (a) and (c) of this section are shown for calendar year 2004. As described in paragraph (d) of this section, maximum penalty limits for later years are set forth in 40 CFR part 19.

(a) * * *

(1) A person who violates §94.1103(a)(1), (a)(4), (a)(5), (a)(6), or (a)(7)(iv) or a manufacturer or dealer who violates §94.1103(a)(3)(i) or (iii) or §94.1103(a)(7) is subject to a civil penalty of not more than $32,500 for each violation.

(2) A person other than a manufacturer or dealer who violates §94.1103(a)(3) (i) or (iii) or §94.1103(a)(7) (i), (ii), or (iii) or any person who violates §94.1103(a)(3)(ii) is subject to a civil penalty of not more than $2,750 for each violation.

* * * * *

(c) * * *

(1) Administrative penalty authority. Subject to 42 U.S.C. 7524(c), in lieu of commencing a civil action under paragraph (b) of this section, the Administrator may assess any civil penalty prescribed in paragraph (a) of this section, except that the maximum amount of penalty sought against each violator in a penalty assessment proceeding shall not exceed $270,000, unless the Administrator and the Attorney General jointly determine that a matter involving a larger penalty amount is appropriate for administrative penalty assessment. Any such determination by the Administrator and the Attorney General is not subject to judicial review. Assessment of a civil penalty shall be by an order made on the record after opportunity for a hearing held in accordance with the procedures found at part 22 of this chapter. The Administrator may compromise, or remit, with or without conditions, any administrative penalty which may be imposed under this section.

* * * * *

(d) The maximum penalty values listed in paragraphs (a) and (c) of this section are shown for calendar year 2004. Maximum penalty limits for later years may be adjusted based on the Consumer Price Index. The specific regulatory provisions for changing the maximum penalties, published in 40 CFR part 19, reference the applicable U.S. Code citation on which the prohibited action is based.

PART 1039—CONTROL OF EMISSIONS FROM NEW AND IN-USE NONROAD COMPRESSION-IGNITION ENGINES

130. The authority citation for part 1039 is revised to read as follows:

Authority: 42 U.S.C. 7401 - 7671q.

131. Section 1039.1 is amended by revising paragraph (c) to read as follows:

§1039.1 Does this part apply for my engines?

* * * * *

(c) The definition of nonroad engine in 40 CFR 1068.30 excludes certain engines used in stationary applications. These engines are not required to comply with this part, except for the requirements in §1039.20. In addition, if these engines are uncertified, the prohibitions in 40 CFR 1068.101 restrict their use as nonroad engines.

* * * * *

132. Section 1039.5 is amended by revising paragraphs (b)(1)(iii) and (b)(2) to read as follows:

§1039.5 Which engines are excluded from this part's requirements?

* * * * *

(b) Marine engines. (1) * * *

(iii) Engines that are exempt from the standards of 40 CFR part 94 pursuant to the provisions of 40 CFR part 94 (except for the provisions of 40 CFR 94.907 or 94.912). For example, an engine that is exempt under 40 CFR 94.906 because it is a manufacturer-owned engine is not subject to the provisions of this part 1039.

* * * * *

(2) Marine engines are subject to the provisions of this part 1039 if they are exempt from 40 CFR part 94 based on the engine-dressing provisions of 40 CFR 94.907 or the common-family provisions of 40 CFR 94.912.

* * * * *

133. Section 1039.10 is amended by revising the introductory text to read as follows:

§1039.10 How is this part organized?

The regulations in this part 1039 contain provisions that affect both engine manufacturers and others. However, the requirements of this part are generally addressed to the engine manufacturer. The term "you" generally means the engine manufacturer, as defined in §1039.801. This part 1039 is divided into the following subparts:

* * * * *

134. Section 1039.104 is amended by revising paragraph (a)(4)(iii) to read as follows:

§1039.104 Are there interim provisions that apply only for a limited time?

* * * * *

(a) * * *

(4) * * *

(iii) All other offset-using engines must meet the standards and other provisions that apply in model year 2011 for engines in the 19-130 kW power categories, in model year 2010 for engines in the 130-560 kW power category, or in model year 2014 for engines above 560 kW. Show that engines meet these emission standards by meeting all the requirements of §1068.265. You must meet the labeling requirements in §1039.135, but add the following statement instead of the compliance statement in §1039.135(c)(12): "THIS ENGINE MEETS U.S. EPA EMISSION STANDARDS UNDER 40 CFR 1039.104(a)." For power categories with a percentage phase-in, these engines should be treated as phase-in engines for purposes of determining compliance with phase-in requirements.

* * * * *

135. Section 1039.125 is amended by revising paragraph (g) introductory text to read as follows:

§1039.125 What maintenance instructions must I give to buyers?

* * * * *

(g) Payment for scheduled maintenance. Owners are responsible for properly maintaining their engines. This generally includes paying for scheduled maintenance. However, manufacturers must pay for scheduled maintenance

during the useful life if it meets all the following criteria:
* * * * *

136. Section 1039.130 is amended by revising paragraph (b)(3) to read as follows:

§1039.130 What installation instructions must I give to equipment manufacturers?

* * * * *

(b) * * *

(3) Describe the instructions needed to properly install the exhaust system and any other components. Include instructions consistent with the requirements of §1039.205(u).

* * * * *

137. Section 1039.225 is amended by revising the section heading and adding paragraphs (a)(3) and (f) to read as follows:

§1039.225 How do I amend my application for certification to include new or modified engines or to change an FEL?

* * * * *

(a) * * *

(3) Modify an FEL for an engine family, as described in paragraph (f) of this section.

* * * * *

(f) You may ask to change your FEL in the following cases:

(1) You may ask to raise your FEL after the start of production. You may not apply the higher FEL to engines you have already introduced into commerce. Use the appropriate FELs with corresponding sales volumes to calculate your average emission level, as described in subpart H of this part. In your request, you must demonstrate that you will still be able to comply with the applicable average emission standards as specified in subparts B and H of this part.

(2) You may ask to lower the FEL for your engine family after the start of production only when you have test data from production engines indicating that your engines comply with the lower FEL. You may create a separate subfamily with the lower FEL. Otherwise, you must use the higher FEL for the family to calculate your average emission level under subpart H of this part.

(3) If you change the FEL during production, you must include the new FEL on the emission control information label for all vehicles produced after the change.

138. Section 1039.240 is amended by revising paragraphs (a) and (b) to read as follows:

§1039.240 How do I demonstrate that my engine family complies with exhaust emission standards?

(a) For purposes of certification, your engine family is considered in compliance with the applicable numerical emission standards in §1039.101(a) and (b), §1039.102(a) and (b), §1039.104, or §1039.105 if all emission-data engines representing that family have test results showing deteriorated emission levels at or below these standards. (Note: if you participate in the ABT program in subpart H of this part, your FELs are considered to be the applicable emission standards with which you must comply.)

(b) Your engine family is deemed not to comply if any emission-data engine representing that family has test results showing a deteriorated emission level above an applicable FEL or emission standard from §1039.101, §1039.102, §1039.104, or §1039.105 for any pollutant.

* * * * *

139. Section 1039.510 is amended by removing paragraphs (c) and (d).

140. Section 1039.605 is amended by revising the section heading and adding paragraph (g) to read as follows:

§1039.605 What provisions apply to engines certified under the motor-vehicle program?

* * * * *

(g) Participation in averaging, banking and trading. Engines adapted for nonroad use under this section may not generate or use emission credits under this part 1039. These engines may generate credits under the ABT provisions in 40 CFR part 86. These engines must use emission credits under 40 CFR part 86 if they are certified to an FEL that exceeds an applicable standard under 40 CFR part 86.

141. Section 1039.610 is amended by revising the section heading and adding paragraph (g) to read as follows:

§1039.610 What provisions apply to vehicles certified under the motor-vehicle program?

* * * * *

(g) Participation in averaging, banking and trading. Vehicles adapted for nonroad use under this section may not generate or use emission credits under this part 1039. These vehicles may generate credits under the ABT provisions in 40 CFR part 86. These vehicles must be included in the calculation of the applicable fleet average in 40 CFR part 86.

142. Section 1039.625 is amended by revising paragraph (j) to read as follows:

§1039.625 What requirements apply under the program for equipment-manufacturer flexibility?

* * * * *

(j) Provisions for engine manufacturers. As an engine manufacturer, you may produce exempted engines as needed under this section. You do not have to request this exemption for your engines, but you must have written assurance from equipment manufacturers that they need a certain number of exempted engines under this section. Send us an annual report of the engines you produce under this section, as described in §1039.250(a). For engines produced under the provisions of paragraph (a)(2) of this section, you must certify the engines under this part 1039. For all other exempt engines, the engines must meet the emission standards in paragraph (e) of this section and you must meet all the requirements of §1068.265. If you show under §1068.265(c) that the engines are identical in all material respects to engines that you have previously certified to one or more FELs above the standards specified in paragraph (e) of this section, you must supply sufficient credits for these engines. Calculate these credits under subpart H of this part using the previously certified FELs and the alternate standards. You must meet the labeling requirements in 40 CFR 89.110, but add the following statement instead of the compliance statement in 40 CFR 89.110(b)(10):

> THIS ENGINE MEETS U.S. EPA EMISSION STANDARDS UNDER 40 CFR 1039.625. SELLING OR INSTALLING THIS ENGINE FOR ANY PURPOSE OTHER THAN FOR THE EQUIPMENT FLEXIBILITY PROVISIONS OF 40 CFR 1039.625 MAY BE A VIOLATION OF FEDERAL LAW SUBJECT TO CIVIL PENALTY.

* * * * *

143. Section 1039.655 is amended by revising paragraph (a)(3) to read as follows:

§1039.655 What special provisions apply to engines sold in Guam, American Samoa, or the Commonwealth of the Northern Mariana Islands?

(a) * * *

(3) You meet all the requirements of §1068.265.

* * * * *

144. Section 1039.705 amended by adding text to paragraph (c)(4) to read as follows:

§1039.705 How do I generate and calculate emission credits?

* * * * *

(c) * * *

(4) Engines for which the location of first retail sale is in a state that has applicable emission regulations for that model year. For example, you may not include engines sold in California if it has emission standards for these engines, and you may not include engines sold in other states that adopt California's emission standards under Clean Air Act section 209(e)(2)(B).

* * * * *

145. Section 1039.740 amended by adding paragraph (b)(4) to read as follows:

§1039.740 What restrictions apply for using emission credits?

* * * * *

(b) * * *

(4) If the maximum power of an engine generating credits under the Tier 2 standards in 40 CFR part 89 is at or above 37 kW and below 75 kW, you may use those credits for certifying engines under the Option #1 standards in §1039.102.

* * * * *

146. Section 1039.801 is amended by revising the definitions for "Aftertreatment", "Brake power", "Constant-speed operation", "Exempted", "Good engineering judgment", "Marine engine", "Marine vessel", "Motor vehicle", "Revoke", "Suspend", "United States", and "Void" and adding a definition for "Amphibious vehicle" to read as follows:

§1039.801 What definitions apply to this part?

* * * * *

Aftertreatment means relating to a catalytic converter, particulate filter, or any other system, component, or technology mounted downstream of the exhaust valve (or exhaust port) whose design function is to decrease emissions in the engine exhaust before it is exhausted to the environment. Exhaust-gas recirculation (EGR) and turbochargers are not aftertreatment.

* * * * *

Amphibious vehicle means a vehicle with wheels or tracks that is designed primarily for operation on land and secondarily for operation in water.

* * * * *

Brake power means the usable power output of the engine, not including power required to fuel, lubricate, or heat the engine, circulate coolant to the engine, or to operate aftertreatment devices.

* * * * *

Constant-speed operation means engine operation with a governor that controls the operator input to maintain an engine at a reference speed, even under changing load. For example, an isochronous governor changes reference speed temporarily during a load change, then returns the engine to its original reference speed after the engine stabilizes. Isochronous governors typically allow speed changes up to 1.0 %. Another example is a speed-droop governor, which has a fixed reference speed at zero load and allows the reference speed to decrease as load increases. With speed-droop governors, speed typically decreases (3 to 10) % below the reference speed at zero load, such that the minimum reference speed occurs near the engine's point of maximum power.

* * * * *

Exempted has the meaning we give in 40 CFR 1068.30.

* * * * *

Good engineering judgment has the meaning we give in 40 CFR 1068.30. See 40 CFR 1068.5 for the administrative process we use to evaluate good engineering judgment.

* * * * *

Marine engine means a nonroad engine that is installed or intended to be installed on a marine vessel. This includes a portable auxiliary marine engine only if its fueling, cooling, or exhaust system is an integral part of the

vessel. There are two kinds of marine engines:
(1) Propulsion marine engine means a marine engine that moves a vessel through the water or directs the vessel's movement.
(2) Auxiliary marine engine means a marine engine not used for propulsion.

Marine vessel has the meaning given in 1 U.S.C. 3, except that it does not include amphibious vehicles. The definition in 1 U.S.C. 3 very broadly includes every craft capable of being used as a means of transportation on water.

* * * * *

Motor vehicle has the meaning we give in 40 CFR 85.1703(a). In general, motor vehicle means any vehicle that EPA deems to be capable of safe and practical use on streets or highways that has a maximum ground speed above 40 kilometers per hour (25 miles per hour) over level, paved surfaces.

* * * * *

Revoke has the meaning we give in 40 CFR 1068.30.

* * * * *

Suspend has the meaning we give in 40 CFR 1068.30.

* * * * *

United States has the meaning we give in 40 CFR 1068.30.

* * * * *

Void has the meaning we give in 40 CFR 1068.30.

* * * * *

PART 1048—CONTROL OF EMISSIONS FROM NEW, LARGE NONROAD SPARK-IGNITION ENGINES

147. The authority citation for part 1048 is revised to read as follows:
Authority: 42 U.S.C. 7401 - 7671q.

148. The heading for subpart A is revised to read as follows:
Subpart A—Overview and Applicability

149. Section 1048.1 is revised to read as follows:
§1048.1 Does this part apply to me?
(a) The regulations in this part 1048 apply for all new, spark-ignition nonroad engines (defined in §1048.801) with maximum engine power above 19 kW, except as provided in §1048.5.
(b) This part 1048 applies for engines built on or after January 1, 2004. You need not follow this part for engines you produce before January 1, 2004. See §§1048.101 through 1048.115, §1048.145, and the definition of model year in §1048.801 for more information about the timing of new requirements.
(c) The definition of nonroad engine in 40 CFR 1068.30 excludes certain engines used in stationary applications. These engines are not required to comply with this part, except for the requirements in §1048.20. In addition, if these engines are uncertified, the prohibitions in 40 CFR 1068.101 restrict their use as nonroad engines.
(d) In certain cases, the regulations in this part 1048 apply to engines with maximum engine power at or below 19 kW that would otherwise be covered by 40 CFR part 90. See 40 CFR 90.913 for provisions related to this allowance.

150. Section 1048.5 is revised to read as follows:
§1048.5 Which engines are excluded from this part's requirements?
This part does not apply to the following nonroad engines:

(a) Engines that are certified to meet the requirements of 40 CFR part 1051, or are otherwise subject to 40 CFR part 1051 (for example, engines used in snowmobiles and all-terrain vehicles).
(b) Propulsion marine engines. See 40 CFR part 91. This part applies with respect to auxiliary marine engines.

151. Section 1048.10 is revised to read as follows:

§1048.10 How is this part organized?

The regulations in this part 1048 contain provisions that affect both engine manufacturers and others. However, the requirements of this part are generally addressed to the engine manufacturer. The term "you" generally means the engine manufacturer, as defined in §1048.801. This part 1048 is divided into the following subparts:
(a) Subpart A of this part defines the applicability of part 1048 and gives an overview of regulatory requirements.
(b) Subpart B of this part describes the emission standards and other requirements that must be met to certify engines under this part. Note that §1048.145 discusses certain interim requirements and compliance provisions that apply only for a limited time.
(c) Subpart C of this part describes how to apply for a certificate of conformity.
(d) Subpart D of this part describes general provisions for testing production-line engines.
(e) Subpart E of this part describes general provisions for testing in-use engines.
(f) Subpart F of this part describes how to test your engines (including references to other parts of the Code of Federal Regulations).
(g) Subpart G of this part and 40 CFR part 1068 describe requirements, prohibitions, and other provisions that apply to engine manufacturers, equipment manufacturers, owners, operators, rebuilders, and all others.
(h) [Reserved]
(i) Subpart I of this part contains definitions and other reference information.

152. Section 1048.15 is revised to read as follows:

§1048.15 Do any other regulation parts affect me?

(a) Part 1065 of this chapter describes procedures and equipment specifications for testing engines. Subpart F of this part 1048 describes how to apply the provisions of part 1065 of this chapter to determine whether engines meet the emission standards in this part.
(b) The requirements and prohibitions of part 1068 of this chapter apply to everyone, including anyone who manufactures, imports, installs, owns, operates, or rebuilds any of the engines subject to this part 1048, or equipment containing these engines. Part 1068 of this chapter describes general provisions, including these seven areas:
(1) Prohibited acts and penalties for engine manufacturers, equipment manufacturers, and others.
(2) Rebuilding and other aftermarket changes.
(3) Exclusions and exemptions for certain engines.
(4) Importing engines.
(5) Selective enforcement audits of your production.
(6) Defect reporting and recall.
(7) Procedures for hearings.
(c) Other parts of this chapter apply if referenced in this part.

153. Section 1048.20 is revised to read as follows:

§1048.20 What requirements from this part apply to excluded stationary engines?

(a) You must add a permanent label or tag to each new engine you produce or import that is excluded under §1048.1(c) as a stationary engine. To meet labeling requirements, you must do the following things:
(1) Attach the label or tag in one piece so no one can remove it without destroying or defacing it.
(2) Secure it to a part of the engine needed for normal operation and not normally requiring replacement.
(3) Make sure it is durable and readable for the engine's entire life.

(4) Write it in English.

(5) Follow the requirements in §1048.135(g) regarding duplicate labels if the engine label is obscured in the final installation.

(b) Engine labels or tags required under this section must have the following information:

(1) Include the heading "EMISSION CONTROL INFORMATION".

(2) Include your full corporate name and trademark. You may instead include the full corporate name and trademark of another company you choose to designate.

(3) State the engine displacement (in liters) and maximum engine power.

(4) State: "THIS ENGINE IS EXCLUDED FROM THE REQUIREMENTS OF 40 CFR PART 1048 AS A "STATIONARY ENGINE." INSTALLING OR USING THIS ENGINE IN ANY OTHER APPLICATION MAY BE A VIOLATION OF FEDERAL LAW SUBJECT TO CIVIL PENALTY.".

154. Section 1048.101 is amended by revising the introductory text and paragraphs (a), (b), (c), (e), (g), and (h) to read as follows:

§1048.101 What exhaust emission standards must my engines meet?

The exhaust emission standards of this section apply by model year. You may certify engines earlier than we require. The Tier 1 standards apply only to steady-state testing, as described in paragraph (b) of this section. The Tier 2 standards apply to steady-state, transient, and field testing, as described in paragraphs (a), (b), and (c) of this section.

(a) Emission standards for transient testing. Starting in the 2007 model year, transient exhaust emissions from your engines may not exceed the Tier 2 emission standards, as follows:

(1) Measure emissions using the applicable transient test procedures described in subpart F of this part.

(2) The Tier 2 HC+NOx standard is 2.7 g/kW-hr and the Tier 2 CO standard is 4.4 g/kW-hr. For severe-duty engines, the Tier 2 HC+NOx standard is 2.7 g/kW-hr and the Tier 2 CO standard is 130.0 g/kW-hr. High-load engines and engines with maximum engine power above 560 kW are not subject to the transient standards in this paragraph (a).

(3) You may optionally certify your engines according to the following formula instead of the standards in paragraph (a)(1) of this section: $(HC+NOx) \times CO^{0.784} \leq 8.57$. The HC+NOx and CO emission levels you select to satisfy this formula, rounded to the nearest 0.1 g/kW-hr, become the emission standards that apply for those engines. You may not select an HC+NOx emission standard higher than 2.7 g/kW-hr or a CO emission standard higher than 20.6 g/kW-hr. The following table illustrates a range of possible values under this paragraph (a)(2):

Table 1 of §1048.101—
Examples of Possible Tier 2
Duty-cycle Emission Standards

HC+NOx (g/kW-hr)	CO (g/kW-hr)
2.7	4.4
2.2	5.6
1.7	7.9
1.3	11.1
1.0	15.5
0.8	20.6

(b) Standards for steady-state testing. Except as we allow in paragraph (d) of this section, steady-state exhaust emissions from your engines may not exceed emission standards, as follows:

(1) Measure emissions using the applicable steady-state test procedures described in subpart F of this part:

(2) The following table shows the Tier 1 exhaust emission standards that apply to engines from 2004 through

2006 model years:

Table 2 of §1048.101—
Tier 1 Emission Standards (g/kW-hr)

Testing	General emission standards		Alternate emission standards for severe-duty engines	
	HC+NOx	CO	HC+NOx	CO
Certification and production-line testing	4.0	50.0	4.0	130.0
In-use testing	5.4	50.0	5.4	130.0

(3) Starting in the 2007 model year, steady-state exhaust emissions from your engines may not exceed the numerical emission standards in paragraph (a) of this section. See paragraph (d) of this section for alternate standards that apply for certain engines.

(c) Standards for field testing. Starting in 2007, exhaust emissions may not exceed field-testing standards, as follows:

(1) Measure emissions using the field-testing procedures in subpart F of this part:

(2) The HC+NOx standard is 3.8 g/kW-hr and the CO standard is 6.5 g/kW-hr. For severe-duty engines, the HC+NOx standard is 3.8 g/kW-hr and the CO standard is 200.0 g/kW-hr. For natural gas-fueled engines, you are not required to measure nonmethane hydrocarbon emissions or total hydrocarbon emissions for testing to show that the engine meets the emission standards of this paragraph (c); that is, you may assume HC emissions are equal to zero.

(3) You may apply the following formula to determine alternate emission standards that apply to your engines instead of the standards in paragraph (c)(1) of this section: $(HC+NOx) \times CO^{0.791} \leq 16.78$. HC+NOx emission levels may not exceed 3.8 g/kW-hr and CO emission levels may not exceed 31.0 g/kW-hr. The following table illustrates a range of possible values under this paragraph (c)(2):

Table 3 of §1048.101—
Examples of Possible Tier 2
Field-testing Emission Standards

HC+NOx (g/kW-hr)	CO (g/kW-hr)
3.8	6.5
3.1	8.5
2.4	11.7
1.8	16.8
1.4	23.1
1.1	31.0

* * * * *

(e) Fuel types. The exhaust emission standards in this section apply for engines using each type of fuel specified in 40 CFR part 1065, subpart C, on which the engines in the engine family are designed to operate, except for engines certified under §1048.625. For engines certified under §1048.625, the standards of this section apply to emissions measured using the specified test fuel. You must meet the numerical emission standards for hydrocarbons in this section based on the following types of hydrocarbon emissions for engines powered by the following fuels:

(1) Gasoline- and LPG-fueled engines: THC emissions.

(2) Natural gas-fueled engines: NMHC emissions.

(3) Alcohol-fueled engines: THCE emissions.

* * * * *

(g) Useful life. Your engines must meet the exhaust emission standards in paragraphs (a) through (c) of this section over their full useful life. The minimum useful life is 5,000 hours of operation or seven years, whichever comes first.

(1) Specify a longer useful life in hours for an engine family under either of two conditions:

(i) If you design, advertise, or market your engine to operate longer than the minimum useful life (your recommended hours until rebuild may indicate a longer design life).

(ii) If your basic mechanical warranty is longer than the minimum useful life.

(2) You may request in your application for certification that we approve a shorter useful life for an engine family. We may approve a shorter useful life, in hours of engine operation but not in years, if we determine that these engines will rarely operate longer than the shorter useful life. If engines identical to those in the engine family have already been produced and are in use, your demonstration must include documentation from such in-use engines. In other cases, your demonstration must include an engineering analysis of information equivalent to such in-use data, such as data from research engines or similar engine models that are already in production. Your demonstration must also include any overhaul interval that you recommend, any mechanical warranty that you offer for the engine or its components, and any relevant customer design specifications. Your demonstration may include any other relevant information. The useful life value may not be shorter than any of the following:

(i) 1,000 hours of operation.

(ii) Your recommended overhaul interval.

(iii) Your mechanical warranty for the engine.

(h) Applicability for testing. The emission standards in this subpart apply to all testing, including certification, production-line, and in-use testing. For production-line testing, you must perform duty-cycle testing as specified in §§1048.505 and 1048.510. The field-testing standards of this section apply for those tests. You need not do additional testing of production-line engines to show that your engines meet the field-testing standards.

155. Section 1048.105 is amended by revising the section heading and adding introductory text to read as follows:

§1048.105 What evaporative emission standards and requirements apply?

The requirements of this section apply to all engines that are subject to this part, except auxiliary marine engines.

* * * * *

156. Section 1048.115 is amended by revising the introductory text and paragraphs (a), (e), and (g) to read as follows:

§1048.115 What other requirements must my engines meet?

Engines subject to this part must meet the following requirements:

(a) Crankcase emissions. Crankcase emissions may not be discharged directly into the ambient atmosphere from any engine, except as follows:

(1) Engines may discharge crankcase emissions to the ambient atmosphere if the emissions are added to the exhaust emissions (either physically or mathematically) during all emission testing.

(2) If you take advantage of this exception, you must do the following things:

(i) Manufacture the engines so that all crankcase emissions can be routed into the applicable sampling systems specified in 40 CFR part 1065.

(ii) Account for deterioration in crankcase emissions when determining exhaust deterioration factors.

(3) For purposes of this paragraph (a), crankcase emissions that are routed to the exhaust upstream of exhaust aftertreatment during all operation are not considered to be discharged directly into the ambient atmosphere.

* * * * *

(e) Adjustable parameters. Engines that have adjustable parameters must meet all the requirements of this part for

any adjustment in the physically adjustable range. An operating parameter is not considered adjustable if you permanently seal it or if it is not normally accessible using ordinary tools. We may require that you set adjustable parameters to any specification within the adjustable range during any testing, including certification testing, selective enforcement auditing, or in-use testing.

* * * * *

(g) Defeat devices. You may not equip your engines with a defeat device. A defeat device is an auxiliary emission-control device that reduces the effectiveness of emission controls under conditions that the engine may reasonably be expected to encounter during normal operation and use. This does not apply to auxiliary-emission control devices you identify in your certification application if any of the following is true:

(1) The conditions of concern were substantially included in the applicable test procedures described in subpart F of this part.

(2) You show your design is necessary to prevent engine (or equipment) damage or accidents.

(3) The reduced effectiveness applies only to starting the engine.

157. Section 1048.120 is revised to read as follows:

§1048.120 What emission-related warranty requirements apply to me?

(a) General requirements. You must warrant to the ultimate purchaser and each subsequent purchaser that the new nonroad engine, including all parts of its emission-control system, meets two conditions:

(1) It is designed, built, and equipped so it conforms at the time of sale to the ultimate purchaser with the requirements of this part.

(2) It is free from defects in materials and workmanship that may keep it from meeting these requirements.

(b) Warranty period. Your emission-related warranty must be valid for at least 50 percent of the engine's useful life in hours of operation or at least three years, whichever comes first. In the case of a high-cost warranted part, the warranty must be valid for at least 70 percent of the engine's useful life in hours of operation or at least five years, whichever comes first. You may offer an emission-related warranty more generous than we require. The emission-related warranty for the engine may not be shorter than any published warranty you offer without charge for the engine. Similarly, the emission-related warranty for any component may not be shorter than any published warranty you offer without charge for that component. If you provide an extended warranty to individual owners for any components covered in paragraph (c) of this section for an additional charge, your emission-related warranty must cover those components for those owners to the same degree. If an engine has no hour meter, we base the warranty periods in this paragraph (b) only on the engine's age (in years). The warranty period begins when the engine is placed into service.

(c) Components covered. The emission-related warranty covers all components whose failure would increase an engine's emissions of any pollutant. This includes components listed in 40 CFR part 1068, Appendix I, and components from any other system you develop to control emissions. The emission-related warranty covers these components even if another company produces the component. Your emission-related warranty does not cover components whose failure would not increase an engine's emissions of any pollutant.

(d) Limited applicability. You may deny warranty claims under this section if the operator caused the problem through improper maintenance or use, as described in 40 CFR 1068.115.

(e) Owners manual. Describe in the owners manual the emission-related warranty provisions from this section that apply to the engine.

158. Section 1048.125 is revised to read as follows:

§1048.125 What maintenance instructions must I give to buyers?

Give the ultimate purchaser of each new nonroad engine written instructions for properly maintaining and using the engine, including the emission-control system. The maintenance instructions also apply to service accumulation on your emission-data engines, as described in 40 CFR part 1065.

(a) Critical emission-related maintenance. Critical emission-related maintenance includes any adjustment, cleaning,

repair, or replacement of critical emission-related components. This may also include additional emission-related maintenance that you determine is critical if we approve it in advance. You may schedule critical emission-related maintenance on these components if you meet the following conditions:

(1) You demonstrate that the maintenance is reasonably likely to be done at the recommended intervals on in-use engines. We will accept scheduled maintenance as reasonably likely to occur if you satisfy any of the following conditions:

(i) You present data showing that, if a lack of maintenance increases emissions, it also unacceptably degrades the engine's performance.

(ii) You present survey data showing that at least 80 percent of engines in the field get the maintenance you specify at the recommended intervals.

(iii) You provide the maintenance free of charge and clearly say so in maintenance instructions for the customer.

(iv) You otherwise show us that the maintenance is reasonably likely to be done at the recommended intervals.

(2) You may not schedule critical emission-related maintenance more frequently than the following minimum intervals, except as specified in paragraph (a)(3), (b) and (c) of this section:

(i) For catalysts, fuel injectors, electronic control units, superchargers, and turbochargers: the useful life of the engine family.

(ii) For gaseous fuel-system components (cleaning without disassembly only) and oxygen sensors: 2,500 hours.

(3) If your engine family has an alternate useful life under §1048.101(g) that is shorter than the period specified in paragraph (a)(2)(ii) of this section, you may not schedule critical emission-related maintenance more frequently than the alternate useful life, except as specified in paragraph (c) of this section.

(b) Recommended additional maintenance. You may recommend any additional amount of maintenance on the components listed in paragraph (a) of this section, as long as you state clearly that these maintenance steps are not necessary to keep the emission-related warranty valid. If operators do the maintenance specified in paragraph (a) of this section, but not the recommended additional maintenance, this does not allow you to disqualify those engines from in-use testing or deny a warranty claim. Do not take these maintenance steps during service accumulation on your emission-data engines.

(c) Special maintenance. You may specify more frequent maintenance to address problems related to special situations, such as substandard fuel or atypical engine operation. For example, you may specify more frequent cleaning of fuel system components for engines you have reason to believe will be using fuel that causes substantially more engine performance problems than commercial fuels of the same type that are generally available across the United States. You must clearly state that this additional maintenance is associated with the special situation you are addressing.

(d) Noncritical emission-related maintenance. You may schedule any amount of emission-related inspection or maintenance that is not covered by paragraph (a) of this section, as long as you state in the owners manual that these steps are not necessary to keep the emission-related warranty valid. If operators fail to do this maintenance, this does not allow you to disqualify those engines from in-use testing or deny a warranty claim. Do not take these inspection or maintenance steps during service accumulation on your emission-data engines.

(e) Maintenance that is not emission-related. For maintenance unrelated to emission controls, you may schedule any amount of inspection or maintenance. You may also take these inspection or maintenance steps during service accumulation on your emission-data engines, as long as they are reasonable and technologically necessary. This might include adding engine oil, changing air, fuel, or oil filters, servicing engine-cooling systems, and adjusting idle speed, governor, engine bolt torque, valve lash, or injector lash. You may perform this nonemission-related maintenance on emission-data engines at the least frequent intervals that you recommend to the ultimate purchaser (but not the intervals recommended for severe service).

(f) Source of parts and repairs. State clearly on the first page of your written maintenance instructions that a repair shop or person of the owner's choosing may maintain, replace, or repair emission-control devices and systems. Your instructions may not require components or service identified by brand, trade, or corporate name. Also, do not

directly or indirectly condition your warranty on a requirement that the equipment be serviced by your franchised dealers or any other service establishments with which you have a commercial relationship.
You may disregard the requirements in this paragraph (f) if you do one of two things:

(1) Provide a component or service without charge under the purchase agreement.

(2) Get us to waive this prohibition in the public's interest by convincing us the engine will work properly only with the identified component or service.

(g) Payment for scheduled maintenance. Owners are responsible for properly maintaining their engines. This generally includes paying for scheduled maintenance. However, manufacturers must pay for scheduled maintenance during the useful life if it meets all the following criteria:

(1) Each affected component was not in general use on similar engines before January 1, 2004.

(2) The primary function of each affected component is to reduce emissions.

(3) The cost of the scheduled maintenance is more than 2 percent of the price of the engine.

(4) Failure to perform the maintenance would not cause clear problems that would significantly degrade the engine's performance.

(h) Owners manual. Explain the owner's responsibility for proper maintenance in the owners manual.

159. Section 1048.130 is amended by revising paragraphs (a), (b)(3), (b)(7), (b)(8), and (d) to read as follows:

§1048.130 What installation instructions must I give to equipment manufacturers?

(a) If you sell an engine for someone else to install in a piece of nonroad equipment, give the engine installer instructions for installing it consistent with the requirements of this part. Include all information necessary to ensure that an engine will be installed in its certified configuration.

(b) * * *

(3) Describe the instructions needed to properly install the exhaust system and any other components. Include instructions consistent with the requirements of §1048.205(v).

* * * * *

(7) Describe any other instructions to make sure the installed engine will operate according to design specifications in your application for certification. This may include, for example, instructions for installing aftertreatment devices when installing the engines.

(8) State: "If you install the engine in a way that makes the engine's emission control information label hard to read during normal engine maintenance, you must place a duplicate label on the equipment, as described in 40 CFR 1068.105.".

* * * * *

(d) Provide instructions in writing or in an equivalent format. For example, you may post instructions on a publicly available website for downloading or printing. If you do not provide the instructions in writing, explain in your application for certification how you will ensure that each installer is informed of the installation requirements.

160. Section 1048.135 is revised to read as follows:

§1048.135 How must I label and identify the engines I produce?

(a) Assign each engine a unique identification number and permanently affix, engrave, or stamp it on the engine in a legible way.

(b) At the time of manufacture, affix a permanent and legible label identifying each engine. The label must be–

(1) Attached in one piece so it is not removable without being destroyed or defaced.

(2) Secured to a part of the engine needed for normal operation and not normally requiring replacement.

(3) Durable and readable for the engine's entire life.

(4) Written in English.

(c) The label must–

(1) Include the heading "EMISSION CONTROL INFORMATION".

(2) Include your full corporate name and trademark. You may identify another company and use its trademark

instead of yours if you comply with the provisions of §1048.635.

(3) Include EPA's standardized designation for the engine family (and subfamily, where applicable).

(4) State the engine's displacement (in liters); however, you may omit this from the label if all the engines in the engine family have the same per-cylinder displacement and total displacement.

(5) State the date of manufacture [MONTH and YEAR]. You may omit this from the label if you keep a record of the engine-manufacture dates and provide it to us upon request.

(6) Identify the emission-control system. Use terms and abbreviations consistent with SAE J1930 (incorporated by reference in §1048.810). You may omit this information from the label if there is not enough room for it and you put it in the owners manual instead.

(7) State: "THIS ENGINE IS CERTIFIED TO OPERATE ON [specify operating fuel or fuels].".

(8) Identify any requirements for fuel and lubricants. You may omit this information from the label if there is not enough room for it and you put it in the owners manual instead.

(9) List specifications and adjustments for engine tuneups; show the proper position for the transmission during tuneup and state which accessories should be operating. You may omit this information from the label if there is not enough room for it and you put it in the owners manual instead.

(10) State the useful life for your engine family if it has a longer useful life under §1048.101(g)(1) or a shortened useful life under §1048.101(g)(2).

(11) Identify the emission standards to which you have certified the engine.

(12) State: "THIS ENGINE COMPLIES WITH U.S. EPA REGULATIONS FOR [MODEL YEAR] LARGE NONROAD SI ENGINES.".

(13) If your engines are certified only for constant-speed operation, state: "USE IN CONSTANT-SPEED APPLICATIONS ONLY".

(14) If your engines are certified only for variable-speed operation, state: "USE IN VARIABLE-SPEED APPLICATIONS ONLY".

(15) If your engines are certified only for high-load engines, state: "THIS ENGINE IS NOT INTENDED FOR OPERATION AT LESS THAN 75 PERCENT OF FULL LOAD.".

(16) If you certify your engines under §1048.101(d) (and show in your application for certification that in-use engines will experience infrequent high-load operation), state: "THIS ENGINE IS NOT INTENDED FOR OPERATION AT MORE THAN __ PERCENT OF FULL LOAD.". Specify the appropriate percentage of full load based on the nature of the engine protection. You may add other statements to discourage operation in engine-protection modes.

(17) If your engines are certified to the voluntary standards in §1048.140, state: "BLUE SKY SERIES".

(d) You may add information to the emission control information label to identify other emission standards that the engine meets or does not meet (such as California standards). You may also add other information to ensure that the engine will be properly maintained and used.

(e) You may ask us to approve modified labeling requirements in this part 1048 if you show that it is necessary or appropriate. We will approve your request if your alternate label is consistent with the requirements of this part.

(g) If you obscure the engine label while installing the engine in the equipment, you must place a duplicate label on the equipment. If others install your engine in their equipment in a way that obscures the engine label, we require them to add a duplicate label on the equipment (see 40 CFR 1068.105); in that case, give them the number of duplicate labels they request and keep the following records for at least five years:

(1) Written documentation of the request from the equipment manufacturer.

(2) The number of duplicate labels you send and the date you sent them.

161. Section 1048.140 is amended by revising paragraph (c) to read as follows:

§1048.140 What are the provisions for certifying Blue Sky Series engines?

* * * * *

(c) For any model year, to receive a certificate of conformity as a "Blue Sky Series" engine family must meet all the requirements in this part while certifying to one of the sets of exhaust emission standards in the following table:

Table 1 of §1048.140—Long-term Standards for Blue Sky Series Engines (g/kW-hr)

Level	Standards for steady-state and transient test procedures		Standards for field-testing procedures	
	HC+NOx	CO	HC+NOx	CO
Blue Sky	0.80	4.4	1.10	6.6
Advanced Blue Sky	0.30	3.0	0.42	4.5
Premium Blue Sky	0.15	3.0	0.21	4.5

* * * * *

162. Section 1048.145 is amended by revising paragraph (a) and removing and reserving paragraph(c) to read as follows:

§1048.145 Are there interim provisions that apply only for a limited time?

* * * * *

(a) Family banking. This paragraph (a) allows you to reduce the number of engines subject to the Tier 2 standards by certifying some of your engines earlier than otherwise required, as follows:

(1) For early-compliant engines to generate offsets under this paragraph (a), you must meet the following general provisions:

(i) You must begin actual production of early-compliant engines by September 1, 2006.

(ii) Engines you produce after December 31, 2006 may not generate offsets.

(iii) Offset-generating engines must be certified to the Tier 2 standards and requirements under this part 1048.

(iv) If you certify engines under the voluntary standards of §1048.140, you may not use them in your calculation under this paragraph (a).

(2) For every offset-generating engine certified to the Tier 2 standards, you may reduce the number of engines with the same maximum engine power that are required to meet the Tier 2 standards in later model years by one engine. You may calculate power-weighted offsets based on actual U.S.-directed sales volumes. For example, if you produce a total of 1,000 engines in 2005 and 2006 with an average maximum power of 60 kW certified to the Tier 2 standards, you may delay certification to that tier of standards for up to 60,000 kW-engine-years in any of the following ways:

(i) Delay certification of up to 600 engines with an average maximum power of 100 kW for one model year.

(ii)Delay certification of up to 200 engines with an average maximum power of 100 kW for three consecutive model years.

(iii) Delay certification of up to 400 engines with an average maximum power of 100 kW for one model year and up t o50 engines with an average maximum power of 200 kW for two model years.

(3) Offset-using engines (that is, those not required to certify to the Tier 2 standards) must be certified to the Tier 1 standards and requirements of this part 1048. You may delay compliance for up to three model years.

(4) By January 31 of each year in which you use the provisions of this paragraph (a), send us a report describing how many offset-generating or offset-using engines you produced in the preceding model year.

* * * * *

163. Section 1048.201 is revised to read as follows:

§1048.201 What are the general requirements for obtaining a certificate of conformity?

(a) You must send us a separate application for a certificate of conformity for each engine family. A certificate of conformity is valid from the indicated effective date until December 31 of the model year for which it is issued.

(b) The application must contain all the information required by this part and must not include false or incomplete statements or information (see §1048.255).

(c) We may ask you to include less information than we specify in this subpart, as long as you maintain all the information required by §1048.250.
(d) You must use good engineering judgment for all decisions related to your application (see 40 CFR 1068.5).
(e) An authorized representative of your company must approve and sign the application.
(f) See §1048.255 for provisions describing how we will process your application.
(g) We may require you to deliver your test engines to a facility we designate for our testing (see §1048.235(c)).

164. Section 1048.205 is revised to read as follows:

§1048.205 What must I include in my application?

This section specifies the information that must be in your application, unless we ask you to include less information under §1048.201(c). We may require you to provide additional information to evaluate your application.
(a) Describe the engine family's specifications and other basic parameters of the engine's design and emission controls. List the fuel types on which your engines are designed to operate (for example, gasoline and natural gas). List each distinguishable engine configuration in the engine family.
(b) Explain how the emission-control system operates. Describe in detail all system components for controlling exhaust emissions, including all auxiliary-emission control devices (AECDs) and all fuel-system components you will install on any production or test engine. Describe the evaporative emission controls. Identify the part number of each component you describe. For this paragraph (b), treat as separate AECDs any devices that modulate or activate differently from each other. Include all the following:

(1) Give a general overview of the engine, the emission-control strategies, and all AECDs.
(2) Describe each AECD's general purpose and function.
(3) Identify the parameters that each AECD senses (including measuring, estimating, calculating, or empirically deriving the values). Include equipment-based parameters and state whether you simulate them during testing with the applicable procedures.
(4) Describe the purpose for sensing each parameter.
(5) Identify the location of each sensor the AECD uses.
(6) Identify the threshold values for the sensed parameters that activate the AECD.
(7) Describe the parameters that the AECD modulates (controls) in response to any sensed parameters, including the range of modulation for each parameter, the relationship between the sensed parameters and the controlled parameters and how the modulation achieves the AECD's stated purpose. Use graphs and tables, as necessary.
(8) Describe each AECD's specific calibration details. This may be in the form of data tables, graphical representations, or some other description.
(9) Describe the hierarchy among the AECDs when multiple AECDs sense or modulate the same parameter. Describe whether the strategies interact in a comparative or additive manner and identify which AECD takes precedence in responding, if applicable.
(10) Explain the extent to which the AECD is included in the applicable test procedures specified in subpart F of this part.
(11) Do the following additional things for AECDs designed to protect engines or equipment:

(i) Identify the engine and/or equipment design limits that make protection necessary and describe any damage that would occur without the AECD.
(ii) Describe how each sensed parameter relates to the protected components' design limits or those operating conditions that cause the need for protection.
(iii) Describe the relationship between the design limits/parameters being protected and the parameters sensed or calculated as surrogates for those design limits/parameters, if applicable.
(iv) Describe how the modulation by the AECD prevents engines and/or equipment from exceeding design limits.
(v) Explain why it is necessary to estimate any parameters instead of measuring them directly and describe how the AECD calculates the estimated value, if applicable.
(vi) Describe how you calibrate the AECD modulation to activate only during conditions related to the

stated need to protect components and only as needed to sufficiently protect those components in a way that minimizes the emission impact.

(c) Explain how the engine diagnostic system works, describing especially the engine conditions (with the corresponding diagnostic trouble codes) that cause the malfunction-indicator light to go on. Propose what you consider to be extreme conditions under which the diagnostic system should disregard trouble codes, as described in §1048.110.

(d) Describe the engines you selected for testing and the reasons for selecting them.

(e) Describe the test equipment and procedures that you used, including any special or alternate test procedures you used (see §1048.501).

(f) Describe how you operated the emission-data engine before testing, including the duty cycle and the number of engine operating hours used to stabilize emission levels. Explain why you selected the method of service accumulation. Describe any scheduled maintenance you did.

(g) List the specifications of each test fuel to show that it falls within the required ranges we specify in 40 CFR part 1065, subpart H.

(h) Identify the engine family's useful life.

(i) Include the maintenance instructions you will give to the ultimate purchaser of each new nonroad engine (see §1048.125).

(j) Include the emission-related installation instructions you will provide if someone else installs your engines in a piece of nonroad equipment (see §1048.130).

(k) Identify each high-cost warranted part and show us how you calculated its replacement cost, including the estimated retail cost of the part, labor rates, and labor hours to diagnose and replace defective parts.

(l) Describe your emission control information label (see §1048.135).

(m) Identify the emission standards to which you are certifying engines in the engine family.

(n) Identify the engine family's deterioration factors and describe how you developed them (see §1048.245). Present any emission test data you used for this.

(o) State that you operated your emission-data engines as described in the application (including the test procedures, test parameters, and test fuels) to show you meet the requirements of this part.

(p) Present emission data to show that you meet emission standards, as follows:

(1) Present exhaust emission data for HC, NOx, and CO on an emission-data engine to show your engines meet the applicable duty-cycle emission standards we specify in §1048.101. Show emission figures before and after applying adjustment factors for deterioration factors for each engine. Include test data for each type of fuel from 40 CFR part 1065, subpart H, on which you intend for engines in the engine family to operate (for example, gasoline, liquefied petroleum gas, methanol, or natural gas). If we specify more than one grade of any fuel type (for example, a summer grade and winter grade of gasoline), you only need to submit test data for one grade, unless the regulations of this part specify otherwise for your engine. Note that §1048.235 allows you to submit an application in certain cases without new emission data.

(2) If your engine family includes a volatile liquid fuel (and you do not use design-based certification under §1048.245), present evaporative test data to show your vehicles meet the evaporative emission standards we specify in subpart B of this part. Show these figures before and after applying deterioration factors, where applicable.

(q) State that all the engines in the engine family comply with the field-testing emission standards we specify in §1048.104 for all normal operation and use when tested as specified in §1048.515. Describe any relevant testing, engineering analysis, or other information in sufficient detail to support your statement.

(r) For engines with maximum engine power above 560 kW, include information showing how your emission controls will function during normal in-use transient operation. For example, this might include the following:

(1) Emission data from transient testing of engines using measurement systems designed for measuring in-use emissions.

(2) Comparison of the engine design for controlling transient emissions with that from engines for which you have emission data over the transient duty cycle for certification.

(3) Detailed descriptions of control algorithms and other design parameters for controlling transient emissions.

(s) Report all test results, including those from invalid tests or from any other tests, whether or not they were conducted according to the test procedures of subpart F of this part. If you measure CO_2, report those emission levels. We may ask you to send other information to confirm that your tests were valid under the requirements of this part and 40 CFR part 1065.

(t) Describe all adjustable operating parameters (see §1048.115(e)), including production tolerances. Include the following in your description of each parameter:

(1) The nominal or recommended setting.

(2) The intended physically adjustable range.

(3) The limits or stops used to establish adjustable ranges.

(4) Information showing why the limits, stops, or other means of inhibiting adjustment are effective in preventing adjustment of parameters on in-use engines to settings outside your intended physically adjustable ranges.

(u) Provide the information to read, record, and interpret all the information broadcast by an engine's onboard computers and electronic control units. State that, upon request, you will give us any hardware, software, or tools we would need to do this. If you broadcast a surrogate parameter for torque values, you must provide us what we need to convert these into torque units. You may reference any appropriate publicly released standards that define conventions for these messages and parameters. Format your information consistent with publicly released standards.

(v) Confirm that your emission-related installation instructions specify how to ensure that sampling of exhaust emissions will be possible after engines are installed in equipment and placed in service. If this cannot be done by simply adding a 20-centimeter extension to the exhaust pipe, show how to sample exhaust emissions in a way that prevents diluting the exhaust sample with ambient air.

(w) State whether your engine will operate in variable-speed applications, constant-speed applications, or both. If your certification covers only constant-speed or only variable-speed applications, describe how you will prevent use of these engines in applications for which they are not certified.

(x) Unconditionally certify that all the engines in the engine family comply with the requirements of this part, other referenced parts of the CFR, and the Clean Air Act.

(y) Include estimates of U.S.-directed production volumes.

(z) Include other applicable information, such as information specified in this part or part 1068 of this chapter related to requests for exemptions.

165. Section 1048.210 is revised to read as follows:

§1048.210 May I get preliminary approval before I complete my application?

If you send us information before you finish the application, we will review it and make any appropriate determinations, especially for questions related to engine family definitions, auxiliary emission-control devices, deterioration factors, testing for service accumulation, and maintenance. Decisions made under this section are considered to be preliminary approval, subject to final review and approval. If you request preliminary approval related to the upcoming model year or the model year after that, we will make best-efforts to make the appropriate determinations as soon as practicable. We will generally not provide preliminary approval related to a future model year more than two years ahead of time.

166. Section 1048.215 is removed.

167. Section 1048.220 is revised to read as follows:

§1048.220 How do I amend the maintenance instructions in my application?

You may amend your emission-related maintenance instructions after you submit your application for certification, as long as the amended instructions remain consistent with the provisions of §1048.125. You must send the

Designated Compliance Officer a request to amend your application for certification for an engine family if you want to change the emission-related maintenance instructions in a way that could affect emissions. In your request, describe the proposed changes to the maintenance instructions. We will disapprove your request if we determine that the amended instructions are inconsistent with maintenance you performed on emission-data engines.
(a) If you are decreasing the specified maintenance, you may distribute the new maintenance instructions to your customers 30 days after we receive your request, unless we disapprove your request. We may approve a shorter time or waive this requirement.
(b) If your requested change would not decrease the specified maintenance, you may distribute the new maintenance instructions anytime after you send your request. For example, this paragraph (b) would cover adding instructions to increase the frequency of a maintenance step for engines in severe-duty applications.
(c) You need not request approval if you are making only minor corrections (such as correcting typographical mistakes), clarifying your maintenance instructions, or changing instructions for maintenance unrelated to emission control.

168. Section 1048.225 is revised to read as follows:

§1048.225 How do I amend my application for certification to include new or modified engines?

Before we issue you a certificate of conformity, you may amend your application to include new or modified engine configurations, subject to the provisions of this section. After we have issued your certificate of conformity, you may send us an amended application requesting that we include new or modified engine configurations within the scope of the certificate, subject to the provisions of this section. You must amend your application if any changes occur with respect to any information included in your application.
(a) You must amend your application before you take either of the following actions:
(1) Add an engine (that is, an additional engine configuration) to an engine family. In this case, the engine added must be consistent with other engines in the engine family with respect to the criteria listed in §1048.230.
(2) Change an engine already included in an engine family in a way that may affect emissions, or change any of the components you described in your application for certification. This includes production and design changes that may affect emissions any time during the engine's lifetime.
(b) To amend your application for certification, send the Designated Compliance Officer the following information:
(1) Describe in detail the addition or change in the engine model or configuration you intend to make.
(2) Include engineering evaluations or data showing that the amended engine family complies with all applicable requirements. You may do this by showing that the original emission-data engine is still appropriate with respect to showing compliance of the amended family with all applicable requirements.
(3) If the original emission-data engine for the engine family is not appropriate to show compliance for the new or modified nonroad engine, include new test data showing that the new or modified nonroad engine meets the requirements of this part.
(c) We may ask for more test data or engineering evaluations. You must give us these within 30 days after we request them.
(d) For engine families already covered by a certificate of conformity, we will determine whether the existing certificate of conformity covers your new or modified nonroad engine. You may ask for a hearing if we deny your request (see §1048.820).
(e) For engine families already covered by a certificate of conformity, you may start producing the new or modified nonroad engine anytime after you send us your amended application, before we make a decision under paragraph (d) of this section. However, if we determine that the affected engines do not meet applicable requirements, we will notify you to cease production of the engines and may require you to recall the engines at no expense to the owner. Choosing to produce engines under this paragraph (e) is deemed to be consent to recall all engines that we determine do not meet applicable emission standards or other requirements and to remedy the nonconformity at no expense to the owner. If you do not provide information required under paragraph (c) of this section within 30 days, you must stop producing the new or modified nonroad engines.

169. Section 1048.230 is revised to read as follows:

§1048.230 How do I select engine families?

(a) Divide your product line into families of engines that are expected to have similar emission characteristics throughout the useful life. Your engine family is limited to a single model year.

(b) Group engines in the same engine family if they are the same in all of the following aspects:

(1) The combustion cycle.

(2) The cooling system (water-cooled vs. air-cooled).

(3) Configuration of the fuel system (for example, fuel injection vs. carburetion).

(4) Method of air aspiration.

(5) The number, location, volume, and composition of catalytic converters.

(6) The number, arrangement, and approximate bore diameter of cylinders.

(7) Evaporative emission controls.

(c) You may subdivide a group of engines that is identical under paragraph (b) of this section into different engine families if you show the expected emission characteristics are different during the useful life.

(d) You may group engines that are not identical with respect to the things listed in paragraph (b) of this section in the same engine family if you show that their emission characteristics during the useful life will be similar.

(e) You may create separate families for exhaust emissions and evaporative emissions. If we do this, list both families on the emission control information label.

(f) Where necessary, you may divide an engine family into sub-families to meet different emission standards, as specified in §1048.101(a)(2). For issues related to compliance and prohibited actions, we will generally apply decisions to the whole engine family. For engine labels and other administrative provisions, we may approve your request for separate treatment of sub-families.

170. Section 1048.235 is revised to read as follows:

§1048.235 What emission testing must I perform for my application for a certificate of conformity?

This section describes the emission testing you must perform to show compliance with the emission standards in §§1048.101(a) and (b) and 1048.105 during certification. See §1048.205(q) regarding emission testing related to the field-testing standards. See §1048.240 and 40 CFR part 1065, subpart E, regarding service accumulation before emission testing.

(a) Test your emission-data engines using the procedures and equipment specified in subpart F of this part. For any testing related to evaporative emissions, use good engineering judgment to include a complete fuel system with the engine.

(b) Select emission-data engines according to the following criteria:

(1) Exhaust testing. For each fuel type from each engine family, select an emission-data engine with a configuration that is most likely to exceed the exhaust emission standards, using good engineering judgment. Consider the emission levels of all exhaust constituents over the full useful life of the engine when operated in a piece of equipment.

(2) Evaporative testing. For each engine family that includes a volatile liquid fuel, select a test fuel system with a configuration that is most likely to exceed the evaporative emission standards, using good engineering judgment.

(c) We may measure emissions from any of your test engines or other engines from the engine family, as follows:

(1) We may decide to do the testing at your plant or any other facility. If we do this, you must deliver the test engine to a test facility we designate. The test engine you provide must include appropriate manifolds, aftertreatment devices, electronic control units, and other emission-related components not normally attached directly to the engine block. If we do the testing at your plant, you must schedule it as soon as possible and make available the instruments, personnel, and equipment we need.

(2) If we measure emissions on one of your test engines, the results of that testing become the official emission results for the engine. Unless we later invalidate these data, we may decide not to consider your data in determining if your engine family meets applicable requirements.

(3) Before we test one of your engines, we may set its adjustable parameters to any point within the physically adjustable ranges (see §1048.115(e)).

(4) Before we test one of your engines, we may calibrate it within normal production tolerances for anything we do not consider an adjustable parameter.

(d) You may ask to use emission data from a previous model year instead of doing new tests, but only if all the following are true:

(1) The engine family from the previous model year differs from the current engine family only with respect to model year.

(2) The emission-data engine from the previous model year remains the appropriate emission-data engine under paragraph (b) of this section.

(3) The data show that the emission-data engine would meet all the requirements that apply to the engine family covered by the application for certification.

(e) We may require you to test a second engine of the same or different configuration in addition to the engine tested under paragraph (b) of this section.

(f) If you use an alternate test procedure under 40 CFR 1065.10 and later testing shows that such testing does not produce results that are equivalent to the procedures specified in subpart F of this part, we may reject data you generated using the alternate procedure.

171. Section 1048.240 is revised to read as follows:

§1048.240 How do I demonstrate that my engine family complies with exhaust emission standards?

(a) For purposes of certification, your engine family is considered in compliance with the applicable numerical emission standards in §1048.101(a) and (b) if all emission-data engines representing that family have test results showing deteriorated emission levels at or below these standards.

(b) Your engine family is deemed not to comply if any emission-data engine representing that family has test results showing a deteriorated emission level above an applicable emission standard from §1048.101 for any pollutant.

(c) To compare emission levels from the emission-data engine with the applicable emission standards, apply deterioration factors to the measured emission levels for each pollutant. Specify the deterioration factors based on emission measurements using four significant figures, consistent with good engineering judgment. For example, your deterioration factors must take into account any available data from in-use testing with similar engines (see subpart E of this part). Small-volume engine manufacturers may use assigned deterioration factors that we establish. Apply deterioration factors as follows:

(1) Multiplicative deterioration factor. For engines that use aftertreatment technology, such as catalytic converters, use a multiplicative deterioration factor for exhaust emissions. A multiplicative deterioration factor is the ratio of exhaust emissions at the end of useful life to exhaust emissions at the low-hour test point. Adjust the official emission results for each tested engine at the selected test point by multiplying the measured emissions by the deterioration factor. If the factor is less than one, use one.

(2) Additive deterioration factor. For engines that do not use aftertreatment technology, use an additive deterioration factor for exhaust emissions. An additive deterioration factor is the difference between exhaust emissions at the end of useful life and exhaust emissions at the low-hour test point. Adjust the official emission results for each tested engine at the selected test point by adding the factor to the measured emissions. If the factor is less than zero, use zero.

(d) Collect emission data using measurements to one more decimal place than the applicable standard. Apply the deterioration factor to the official emission result, as described in paragraph (c) of this section, then round the adjusted figure to the same number of decimal places as the emission standard. Compare the rounded emission levels to the emission standard for each emission-data engine. In the case of HC+NOx standards, apply the deterioration factor to each pollutant and then add the results before rounding.

172. Section 1048.250 is amended by revising paragraphs (a) and (c) to read as follows:

§1048.250 What records must I keep and make available to EPA?

(a) Organize and maintain the following records:

(1) A copy of all applications and any summary information you send us.

(2) Any of the information we specify in §1048.205 that you were not required to include in your application.

(3) A detailed history of each emission-data engine. For each engine, describe all of the following:

(i) The emission-data engine's construction, including its origin and buildup, steps you took to ensure that it represents production engines, any components you built specially for it, and all the components you include in your application for certification.

(ii) How you accumulated engine operating hours (service accumulation), including the dates and the number of hours accumulated.

(iii) All maintenance, including modifications, parts changes, and other service, and the dates and reasons for the maintenance.

(iv) All your emission tests, including documentation on routine and standard tests, as specified in part 40 CFR part 1065, and the date and purpose of each test.

(v) All tests to diagnose engine or emission-control performance, giving the date and time of each and the reasons for the test.

(vi) Any other significant events.

(4) Production figures for each engine family divided by assembly plant.

(5) Keep a list of engine identification numbers for all the engines you produce under each certificate of conformity.

* * * * *

(c) Store these records in any format and on any media, as long as you can promptly send us organized, written records in English if we ask for them. You must keep these records readily available. We may review them at any time.

* * * * *

173. Section 1048.255 is revised to read as follows:

§1048.255 When may EPA deny, revoke, or void my certificate of conformity?

(a) If we determine your application is complete and shows that the engine family meets all the requirements of this part and the Act, we will issue a certificate of conformity for your engine family for that model year. We may make the approval subject to additional conditions.

(b) We may deny your application for certification if we determine that your engine family fails to comply with emission standards or other requirements of this part or the Act. Our decision may be based on a review of all information available to us. If we deny your application, we will explain why in writing.

(c) In addition, we may deny your application or suspend or revoke your certificate if you do any of the following:

(1) Refuse to comply with any testing or reporting requirements.

(2) Submit false or incomplete information (paragraph (e) of this section applies if this is fraudulent).

(3) Render inaccurate any test data.

(4) Deny us from completing authorized activities despite our presenting a warrant or court order (see 40 CFR 1068.20). This includes a failure to provide reasonable assistance.

(5) Produce engines for importation into the United States at a location where local law prohibits us from carrying out authorized activities.

(6) Fail to supply requested information or amend your application to include all engines being produced.

(7) Take any action that otherwise circumvents the intent of the Act or this part.

(d) We may void your certificate if you do not keep the records we require or do not give us information when we ask for it.

(e) We may void your certificate if we find that you intentionally submitted false or incomplete information.

(f) If we deny your application or suspend, revoke, or void your certificate, you may ask for a hearing (see §1048.820).

174. Section 1048.301 is amended by revising paragraphs (a) and (f) to read as follows:

§1048.301 When must I test my production-line engines?

(a) If you produce engines that are subject to the requirements of this part, you must test them as described in this subpart.

* * * * *

(f) We may ask you to make a reasonable number of production-line engines available for a reasonable time so we can test or inspect them for compliance with the requirements of this part. See 40 CFR 1068.27.

175. Section 1048.305 is amended by revising paragraphs (d)(1), (f), and (g) to read as follows:

§1048.305 How must I prepare and test my production-line engines?

* * * * *

(d) * * *

(1) We may adjust or require you to adjust idle speed outside the physically adjustable range as needed only until the engine has stabilized emission levels (see paragraph (e) of this section). We may ask you for information needed to establish an alternate minimum idle speed.

* * * * *

(f) Damage during shipment. If shipping an engine to a remote facility for production-line testing makes necessary an adjustment or repair, you must wait until after the initial emission test to do this work. We may waive this requirement if the test would be impossible or unsafe, or if it would permanently damage the engine. Report to us, in your written report under §1048.345, all adjustments or repairs you make on test engines before each test.

(g) Retesting after invalid tests. You may retest an engine if you determine an emission test is invalid under subpart F of this part. Explain in your written report reasons for invalidating any test and the emission results from all tests. If you retest an engine and, within ten days after testing, ask to substitute results of the new tests for the original ones, we will answer within ten days after we receive your information.

176. Section 1048.310 is amended by revising paragraphs (c) introductory text, (c)(2), (g), and (i) to read as follows:

§1048.310 How must I select engines for production-line testing?

* * * * *

(c) Calculate the required sample size for each engine family. Separately calculate this figure for HC+NOx and for CO. The required sample size is the greater of these two calculated values. Use the following equation:

$$N = \left[\frac{(t_{95} \times \sigma)}{(x - STD)}\right]^2 + 1$$

Where:

N	=	Required sample size for the model year.
t_{95}	=	95% confidence coefficient, which depends on the number of tests completed, n, as specified in the table in paragraph (c)(1) of this section. It defines 95% confidence intervals for a one-tail distribution.
x	=	Mean of emission test results of the sample.
STD	=	Emission standard.
σ	=	Test sample standard deviation (see paragraph (c)(2) of this section).
n	=	The number of tests completed in an engine family.

* * *

(2) Calculate the standard deviation, σ, for the test sample using the following formula:

$$\sigma = \sqrt{\frac{\sum (X_i - x)^2}{n - 1}}$$

Where:

X_i = Emission test result for an individual engine.

* * * * *

(g) Continue testing any engine family for which the sample mean, x, is greater than the emission standard. This applies if the sample mean for either HC+NOx or for CO is greater than the emission standard. Continue testing until one of the following things happens:

(1) The number of tests completed in an engine family, n, is greater than the required sample size, N, and the sample mean, x, is less than or equal to the emission standard. For example, if N = 3.1 after the third test, the sample-size calculation does not allow you to stop testing.

(2) The engine family does not comply according to §1048.315.

(3) You test 30 engines from the engine family.

(4) You test eight engines and one percent of your projected annual U.S.-directed production volume for the engine family.

(5) You choose to declare that the engine family does not comply with the requirements of this subpart.

* * * * *

(i) You may elect to test more randomly chosen engines than we require under this section. Include these engines in the sample-size calculations.

177. Section 1048.325 is amended by revising paragraph (d) to read as follows:

§1048.325 What happens if an engine family fails the production-line requirements?

* * * * *

(d) Section 1048.335 specifies steps you must take to remedy the cause of the engine family's production-line failure. All the engines you have produced since the end of the last test period are presumed noncompliant and should be addressed in your proposed remedy. We may require you to apply the remedy to engines produced earlier if we determine that the cause of the failure is likely to have affected the earlier engines.

178. Section 1048.350 is amended by revising paragraph (a) to read as follows:

§1048.350 What records must I keep?

(a) Organize and maintain your records as described in this section. We may review your records at any time.

* * * * *

179. Section 1048.425 is amended by revising paragraph (a) to read as follows:

§1048.425 What records must I keep?

(a) Organize and maintain your records as described in this section. We may review your records at any time.

* * * * *

180. Section 1048.501 is revised to read as follows:

§1048.501 How do I run a valid emission test?

(a) Use the equipment and procedures for spark-ignition engines in 40 CFR part 1065 to determine whether engines meet the duty-cycle emission standards in §1048.101(a) and (b). Measure the emissions of all the pollutants we regulate in §1048.101 using the full-flow or partial-flow dilute sampling procedures as specified in 40 CFR part 1065. Use the applicable duty cycles specified in §§1048.505 and 1048.510.

(b) Section 1048.515 describes the supplemental procedures for evaluating whether engines meet the field-testing emission standards in §1048.101(c).
(c) Use the fuels specified in 40 CFR part 1065, subpart C, to perform valid tests for all the testing we require in this part, except as noted in §1048.515. For service accumulation, use the test fuel or any commercially available fuel that is representative of the fuel that in-use engines will use.
(d) To test engines for evaporative emissions, use the equipment and procedures specified for testing diurnal emissions in 40 CFR 86.107-96 and 86.133-96 with fuel meeting the specifications in 40 CFR part 1065, subpart C. Measure emissions from a test engine with a complete fuel system. Reported emission levels must be based on the highest emissions from three successive 24-hour periods of cycling temperatures. Note that you may omit testing for evaporative emissions during certification if you certify by design, as specified in §1048.245.
(e) You may use special or alternate procedures to the extent we allow them under 40 CFR 1065.10.
(f) This subpart is addressed to you as a manufacturer, but it applies equally to anyone who does testing for you, and to us when we perform testing to determine if your engines meet emission standards.

181. Section 1048.505 is revised to read as follows:

§1048.505 How do I test engines using steady-state duty cycles, including ramped-modal testing?

This section describes how to test engines under steady-state conditions. In some cases, we allow you to choose the appropriate steady-state duty cycle for an engine. In these cases, you must use the duty cycle you select in your application for certification for all testing you perform for that engine family. If we test your engines to confirm that they meet emission standards, we will use the duty cycles you select for your own testing. We may also perform other testing as allowed by the Clean Air Act.
(a) You may perform steady-state testing with either discrete-mode or ramped-modal cycles, as follows:
(1) For discrete-mode testing, sample emissions separately for each mode, then calculate an average emission level for the whole cycle using the weighting factors specified for each mode. Calculate cycle statistics for the sequence of modes and compare with the specified values in 40 CFR part 1065 to confirm that the test is valid. Operate the engine and sampling system as follows:
(i) Engines with NOx aftertreatment. For engines that depend on aftertreatment to meet the NOx emission standard, operate the engine for 5-6 minutes, then sample emissions for 1-3 minutes in each mode.
(ii) Engines without NOx aftertreatment. For other engines, operate the engine for at least 5 minutes, then sample emissions for at least 1 minute in each mode. Calculate cycle statistics for the sequence of modes and compare with the specified values in 40 CFR part 1065 to confirm that the test is valid.
(2) For ramped-modal testing, start sampling at the beginning of the first mode and continue sampling until the end of the last mode. Calculate emissions and cycle statistics the same as for transient testing.
(b) Measure emissions by testing the engine on a dynamometer with one or more of the following sets of duty cycles to determine whether it meets the steady-state emission standards in §1048.101(b):
(1) For engines from an engine family that will be used only in variable-speed applications, use one of the following duty cycles:
(i) The following duty cycle applies for discrete-mode testing:

Table 1 of §1048.505

C2 Mode Number	Engine Speed[1]	Observed Torque[2]	Minimum Time in mode (minutes)	Weighting Factors
1	Maximum test speed	25	3.0	0.06
2	Intermediate test speed	100	3.0	0.02
3	Intermediate test speed	75	3.0	0.05
4	Intermediate test speed	50	3.0	0.32
5	Intermediate test speed	25	3.0	0.30
6	Intermediate test speed	10	3.0	0.10
7	Idle	0	3.0	0.15

[1] Speed terms are defined in 40 CFR part 1065.
[2] The percent torque is relative to the maximum torque at the given engine speed.

(ii) The following duty cycle applies for ramped-modal testing:

Table 2 of §1048.505

RMC Mode	Time in Mode (seconds)	Engine Speed[1,2]	Torque (percent)[2,3]
1a Steady-state	119	Warm Idle	0
1b Transition	20	Linear Transition	Linear Transition
2a Steady-state	29	Intermediate Speed	100
2b Transition	20	Intermediate Speed	Linear Transition
3a Steady-state	150	Intermediate Speed	10
3b Transition	20	Intermediate Speed	Linear Transition
4a Steady-state	80	Intermediate Speed	75
4b Transition	20	Intermediate Speed	Linear Transition
5a Steady-state	513	Intermediate Speed	25
5b Transition	20	Intermediate Speed	Linear Transition
6a Steady-state	549	Intermediate Speed	50
5b Transition	20	Linear Transition	Linear Transition
6a Steady-state	96	Maximum test speed	25
6b Transition	20	Linear Transition	Linear Transition
7 Steady-state	124	Warm Idle	0

[1] Speed terms are defined in 40 CFR part 1065.
[2] Advance from one mode to the next within a 20-second transition phase. During the transition phase, command a linear progression from the torque setting of the current mode to the torque setting of the next mode.
[3] The percent torque is relative to maximum torque at the commanded engine speed.

(2) For engines from an engine family that will be used only at a single, rated speed, use one of the following duty cycles:

(i) The following duty cycle applies for discrete-mode testing:

Table 3 of §1048.505

D2 Mode Number	Engine Speed	Torque[1]	Minimum Time in mode (minutes)	Weighting Factors
1	Maximum test speed	100	3.0	0.05
2	Maximum test speed	75	3.0	0.25
3	Maximum test speed	50	3.0	0.30
4	Maximum test speed	25	3.0	0.30
5	Maximum test speed	10	3.0	0.10

[1]The percent torque is relative to the maximum torque at maximum test speed.

(ii) The following duty cycle applies for ramped-modal testing:

Table 4 of §1048.505

RMC Mode	Time in mode (seconds)	Engine Speed	Torque (percent) [1,2]
1a Steady-state	53	Engine Governed	100
1b Transition	20	Engine Governed	Linear transition
2a Steady-state	101	Engine Governed	10
2b Transition	20	Engine Governed	Linear transition
3a Steady-state	277	Engine Governed	75
3b Transition	20	Engine Governed	Linear transition
4a Steady-state	339	Engine Governed	25
4b Transition	20	Engine Governed	Linear transition
5 Steady-state	350	Engine Governed	50

[1] The percent torque is relative to maximum test torque.
[2] Advance from one mode to the next within a 20-second transition phase. During the transition phase, command a linear progression from the torque setting of the current mode to the torque setting of the next mode.

(3) Use a duty cycle from both paragraphs (b)(1) and (b)(2) of this section if you will not restrict an engine family to constant-speed or variable-speed applications.

(4) Use a duty cycle specified in paragraph (b)(2) of this section for all severe-duty engines.

(5) For high-load engines, use one of the following duty cycles:

(i) The following duty cycle applies for discrete-mode testing:

Table 5 of §1048.505

D1 Mode Number	Engine Speed	Torque[1]	Minimum Time in mode (minutes)	Weighting Factors
1	Maximum test speed	100	3.0	0.50
2	Maximum test speed	75	3.0	0.50

[1]The percent torque is relative to the maximum torque at maximum test speed.

(ii) The following duty cycle applies for discrete-mode testing:

Table 6 of §1048.505

RMC Modes	Time in Mode (seconds)	Engine Speed (percent)	Torque (percent)[1,2]
1a Steady-state	290	Engine Governed	100
1b Transition	20	Engine Governed	Linear Transition
2 Steady-state	290	Engine Governed	75

[1] The percent torque is relative to maximum test torque.
[2] Advance from one mode to the next within a 20-second transition phase. During the transition phase, command a linear progression from the torque setting of the current mode to the torque setting of the next mode.

(c) If we test an engine to confirm that it meets the duty-cycle emission standards, we will use the steady-state duty cycles that apply for that engine family.

(d) During idle mode, operate the engine with the following parameters:

(1) Hold the speed within your specifications.

(2) Set the engine to operate at its minimum fueling rate.

(3) Keep engine torque under 5 percent of maximum test torque.

(e) For full-load operating modes, operate the engine at wide-open throttle.

(f) See 40 CFR part 1065 for detailed specifications of tolerances and calculations.

(g) For those cases where transient testing is not necessary, perform the steady-state test according to this section after an appropriate warm-up period, consistent with 40 CFR part 1065, subpart F.

182. Section 1048.510 is amended by revising the section heading and paragraph (a) to read as follows:

§1048.510 Which duty cycles do I use for transient testing?

(a) Starting with the 2007 model year, measure emissions by testing the engine on a dynamometer with one of the following transient duty cycles to determine whether it meets the transient emission standards in §1048.101(a):

(1) For constant-speed engines and severe-duty engines, use the transient duty-cycle described in Appendix I of this part.

(2) For all other engines, use the transient duty cycle described in Appendix II of this part.

* * * * *

183. Section 1048.515 is amended by revising the section heading and paragraphs (a)(1) and (a)(2) to read as follows:

§1048.515 What are the field-testing procedures?

(a) * * *

(1) Remove the selected engines for testing in a laboratory. You may use an engine dynamometer to simulate normal operation, as described in this section.

(2) Test the selected engines while they remain installed in the equipment. In 40 CFR part 1065, subpart J, we describe the equipment and sampling methods for testing engines in the field. Use fuel meeting the specifications of 40 CFR part 1065, subpart H, or a fuel typical of what you would expect the engine to use in service.

* * * * *

184. Section 1048.601 is revised to read as follows:

§1048.601 What compliance provisions apply to these engines?

Engine and equipment manufacturers, as well as owners, operators, and rebuilders of engines subject to the requirements of this part, and all other persons, must observe the provisions of this part, the requirements and prohibitions in 40 CFR part 1068, and the provisions of the Act.

185. Section 1048.605 is revised to read as follows:

§1048.605 What provisions apply to engines certified under the motor-vehicle program?

(a) General provisions. If you are an engine manufacturer, this section allows you to introduce new nonroad engines into commerce if they are already certified to the requirements that apply to compression-ignition engines under 40 CFR parts 85 and 86 for the appropriate model year. If you comply with all the provisions of this section, we consider the certificate issued under 40 CFR part 86 for each engine to also be a valid certificate of conformity under this part 1048 for its model year, without a separate application for certification under the requirements of this part 1048. See §1048.610 for similar provisions that apply to engines certified to chassis-based standards for motor vehicles.

(b) Equipment-manufacturer provisions. If you are not an engine manufacturer, you may produce nonroad equipment using motor-vehicle engines under this section as long as the engine has been properly labeled as specified in paragraph (d)(5) of this section and you do not make any of the changes described in paragraph (d)(2) of this section. If you modify the motor-vehicle engine in any of the ways described in paragraph (d)(2) of this section, we will consider you a manufacturer of a new nonroad engine. Such engine modifications prevent you from using the provisions of this section.

(c) Liability. Engines for which you meet the requirements of this section are exempt from all the requirements and prohibitions of this part, except for those specified in this section. Engines exempted under this section must meet all the applicable requirements from 40 CFR parts 85 and 86. This applies to engine manufacturers, equipment manufacturers who use these engines, and all other persons as if these engines were used in a motor vehicle. The prohibited acts of §1068.101(a)(1) apply to these new engines and equipment; however, we consider the certificate issued under 40 CFR part 86 for each engine to also be a valid certificate of conformity under this part 1048 for its model year. If we make a determination that these engines do not conform to the regulations during their useful life, we may require you to recall them under 40 CFR part 86 or 40 CFR 1068.505.

(d) Specific requirements. If you are an engine manufacturer and meet all the following criteria and requirements regarding your new nonroad engine, the engine is eligible for an exemption under this section:

(1) Your engine must be covered by a valid certificate of conformity issued under 40 CFR part 86.

(2) You must not make any changes to the certified engine that could reasonably be expected to increase its exhaust emissions for any pollutant, or its evaporative emissions. For example, if you make any of the following changes to one of these engines, you do not qualify for this exemption:

(i) Change any fuel system or evaporative system parameters from the certified configuration (this does not apply to refueling controls).

(ii) Change, remove, or fail to properly install any other component, element of design, or calibration specified in the engine manufacturer's application for certification. This includes aftertreatment devices and all related components.

(iii) Modify or design the engine cooling system so that temperatures or heat rejection rates are outside the original engine manufacturer's specified ranges.

(3) You must show that fewer than 50 percent of the engine model's total sales for the model year, from all companies, are used in nonroad applications, as follows:

(i) If you are the original manufacturer of the engine, base this showing on your sales information.

(ii) In all other cases, you must get the original manufacturer of the engine to confirm this based on its sales information.

(4) You must ensure that the engine has the label we require under 40 CFR part 86.

(5) You must add a permanent supplemental label to the engine in a position where it will remain clearly visible after installation in the equipment. In the supplemental label, do the following:

(i) Include the heading: "NONROAD ENGINE EMISSION CONTROL INFORMATION".

(ii) Include your full corporate name and trademark. You may instead include the full corporate name and trademark of another company you choose to designate.

(iii) State: "THIS ENGINE WAS ADAPTED FOR NONROAD USE WITHOUT AFFECTING ITS EMISSION CONTROLS. THE EMISSION-CONTROL SYSTEM DEPENDS ON THE USE OF FUEL MEETING SPECIFICATIONS THAT APPLY FOR MOTOR-VEHICLE APPLICATIONS. OPERATING THE ENGINE ON OTHER FUELS MAY BE A VIOLATION OF FEDERAL LAW.".

(iv) State the date you finished modifying the engine (month and year), if applicable.

(6) The original and supplemental labels must be readily visible after the engine is installed in the equipment or, if the equipment obscures the engine's emission control information label, the equipment manufacturer must attach duplicate labels, as described in 40 CFR 1068.105.

(7) Send the Designated Compliance Officer a signed letter by the end of each calendar year (or less often if we tell you) with all the following information:

(i) Identify your full corporate name, address, and telephone number.

(ii) List the engine models you expect to produce under this exemption in the coming year.

(iii) State: "We produce each listed engine model for nonroad application without making any changes that could increase its certified emission levels, as described in 40 CFR 1048.605.".

(e) Failure to comply. If your engines do not meet the criteria listed in paragraph (d) of this section, they will be subject to the standards, requirements, and prohibitions of this part 1048 and the certificate issued under 40 CFR part 86 will not be deemed to also be a certificate issued under this part 1048. Introducing these engines into commerce

without a valid exemption or certificate of conformity under this part violates the prohibitions in 40 CFR 1068.101(a)(1).

(f) Data submission. We may require you to send us emission test data on any applicable nonroad duty cycles.

(g) Participation in averaging, banking and trading. Engines adapted for nonroad use under this section may generate credits under the ABT provisions in 40 CFR part 86. These engines must use emission credits under 40 CFR part 86 if they are certified to an FEL that exceeds an applicable standard under 40 CFR part 86.

186. Section 1048.610 is revised to read as follows:

§1048.610 What provisions apply to vehicles certified under the motor-vehicle program?

(a) General provisions. If you are a motor-vehicle manufacturer, this section allows you to introduce new nonroad engines or equipment into commerce if the vehicle is already certified to the requirements that apply under 40 CFR parts 85 and 86 for the appropriate model year. If you comply with all of the provisions of this section, we consider the certificate issued under 40 CFR part 86 for each motor vehicle to also be a valid certificate of conformity for the engine under this part 1048 for its model year, without a separate application for certification under the requirements of this part 1048. See §1048.605 for similar provisions that apply to motor-vehicle engines produced for nonroad equipment.

(b) Equipment-manufacturer provisions. If you are not an engine manufacturer, you may produce nonroad equipment from motor vehicles under this section as long as the equipment has the labels specified in paragraph (d)(5) of this section and you do not make any of the changes described in paragraph (d)(2) of this section. You must also add the fuel-inlet label we specify in §1048.135(e). If you modify the motor vehicle or its engine in any of the ways described in paragraph (d)(2) of this section, we will consider you a manufacturer of a new nonroad engine. Such modifications prevent you from using the provisions of this section.

(c) Liability. Engines, vehicles, and equipment for which you meet the requirements of this section are exempt from all the requirements and prohibitions of this part, except for those specified in this section. Engines exempted under this section must meet all the applicable requirements from 40 CFR parts 85 and 86. This applies to engine manufacturers, equipment manufacturers, and all other persons as if the nonroad equipment were motor vehicles. The prohibited acts of §1068.101(a)(1) apply to these new pieces of equipment; however, we consider the certificate issued under 40 CFR part 86 for each motor vehicle to also be a valid certificate of conformity for the engine under this part 1048 for its model year. If we make a determination that these engines, vehicles, or equipment do not conform to the regulations during their useful life, we may require you to recall them under 40 CFR part 86 or 40 CFR 1068.505.

(d) Specific requirements. If you are a motor-vehicle manufacturer and meet all the following criteria and requirements regarding your new nonroad equipment and its engine, the engine is eligible for an exemption under this section:

(1) Your equipment must be covered by a valid certificate of conformity as a motor vehicle issued under 40 CFR part 86.

(2) You must not make any changes to the certified vehicle that we could reasonably expect to increase its exhaust emissions for any pollutant, or its evaporative emissions if it is subject to evaporative-emission standards. For example, if you make any of the following changes, you do not qualify for this exemption:

(i) Change any fuel system or evaporative system parameters from the certified configuration, including refueling emission controls.

(ii) Change, remove, or fail to properly install any other component, element of design, or calibration specified in the vehicle manufacturer's application for certification. This includes aftertreatment devices and all related components.

(iii) Modify or design the engine cooling system so that temperatures or heat rejection rates are outside the original vehicle manufacturer's specified ranges.

(iv) Add more than 500 pounds to the curb weight of the originally certified motor vehicle.

(3) You must show that fewer than 50 percent of the total sales as a motor vehicle or a piece of nonroad equipment, from all companies, are used in nonroad applications, as follows:

(i) If you are the original manufacturer of the vehicle, base this showing on your sales information.

(ii) In all other cases, you must get the original manufacturer of the vehicle to confirm this based on their sales information.

(4) The equipment must have the vehicle emission control information and fuel labels we require under 40 CFR 86.007-35.

(5) You must add a permanent supplemental label to the equipment in a position where it will remain clearly visible. In the supplemental label, do the following:

(i) Include the heading: "NONROAD ENGINE EMISSION CONTROL INFORMATION".

(ii) Include your full corporate name and trademark. You may instead include the full corporate name and trademark of another company you choose to designate.

(iii) State: "THIS VEHICLE WAS ADAPTED FOR NONROAD USE WITHOUT AFFECTING ITS EMISSION CONTROLS. THE EMISSION-CONTROL SYSTEM DEPENDS ON THE USE OF FUEL MEETING SPECIFICATIONS THAT APPLY FOR MOTOR-VEHICLE APPLICATIONS. OPERATING THE ENGINE ON OTHER FUELS MAY BE A VIOLATION OF FEDERAL LAW.".

(iv) State the date you finished modifying the vehicle (month and year), if applicable.

(6) The original and supplemental labels must be readily visible in the fully assembled equipment.

(7) Send the Designated Compliance Officer a signed letter by the end of each calendar year (or less often if we tell you) with all the following information:

(i) Identify your full corporate name, address, and telephone number.

(ii) List the equipment models you expect to produce under this exemption in the coming year.

(iii) State: "We produced each listed engine or equipment model for nonroad application without making any changes that could increase its certified emission levels, as described in 40 CFR 1048.610.".

(e) Failure to comply. If your engines, vehicles, or equipment do not meet the criteria listed in paragraph (d) of this section, the engines will be subject to the standards, requirements, and prohibitions of this part 1048, and the certificate issued under 40 CFR part 86 will not be deemed to also be a certificate issued under this part 1048. Introducing these engines into commerce without a valid exemption or certificate of conformity under this part violates the prohibitions in 40 CFR 1068.101(a)(1).

(f) Data submission. We may require you to send us emission test data on any applicable nonroad duty cycles.

(g) Participation in averaging, banking and trading. Vehicles adapted for nonroad use under this section may generate credits under the ABT provisions in 40 CFR part 86. These vehicles must use emission credits under 40 CFR part 86 if they are certified to an FEL that exceeds an applicable standard under 40 CFR part 86.

187. Section 1048.615 is amended by revising paragraphs (a)(2), (a)(3), (c), and (d) to read as follows:

§1048.615 What are the provisions for exempting engines designed for lawn and garden applications?

* * * * *

(a) * * *

(2) The engine must have a maximum engine power at or below 30 kW.

(3) The engine must be in an engine family that has a valid certificate of conformity showing that it meets emission standards for Class II engines under 40 CFR part 90 for the appropriate model year.

* * * * *

(c) If your engines do not meet the criteria listed in paragraph (a) of this section, they will be subject to the provisions of this part. Introducing these engines into commerce without a valid exemption or certificate of conformity violates the prohibitions in 40 CFR 1068.101.

(d) Engines exempted under this section are subject to all the requirements affecting engines under 40 CFR part 90. The requirements and restrictions of 40 CFR part 90 apply to anyone manufacturing these engines, anyone manufacturing equipment that uses these engines, and all other persons in the same manner as if these engines had a total maximum engine power at or below 19 Kw.

188. Section 1048.620 is amended by revising paragraphs (a)(2), (a)(3), (c), (d), and (e) to read as follows:

§1048.620 What are the provisions for exempting large engines fueled by natural gas?

(a) * * *

(2) The engine must have maximum engine power at or above 250 kW.

(3) The engine must be in an engine family that has a valid certificate of conformity showing that it meets emission standards for engines of that power rating under 40 CFR part 89 or 1039.

* * * * *

(c) If your engines do not meet the criteria listed in paragraph (a) of this section, they will be subject to the provisions of this part. Introducing these engines into commerce without a valid exemption or certificate of conformity violates the prohibitions in 40 CFR 1068.101.

(d) Engines exempted under this section are subject to all the requirements affecting engines under 40 CFR part 89 or 1039. The requirements and restrictions of 40 CFR part 89 or 1039 apply to anyone manufacturing these engines, anyone manufacturing equipment that uses these engines, and all other persons in the same manner as if these were nonroad diesel engines.

(e) You may request an exemption under this section by submitting an application for certification for the engines under 40 CFR part 89 or 1039.

189. Section 1048.625 is revised to read as follows:

§1048.625 What special provisions apply to engines using noncommercial fuels?

In §1048.115(e), we generally require that engines meet emission standards for any adjustment within the full range of any adjustable parameters. For engines that use noncommercial fuels significantly different than the specified test fuel of the same type, you may ask to use the parameter-adjustment provisions of this section instead of those in §1048.115(e). Engines certified under this section must be in a separate engine family.

(a) If we approve your request, the following provisions apply:

(1) You must certify the engine using the test fuel specified in §1048.501.

(2) You may produce the engine without limits or stops that keep the engine adjusted within the certified range.

(3) You must specify in-use adjustments different than the adjustable settings appropriate for the specified test fuel, consistent with the provisions of paragraph (b)(1) of this section.

(b) To produce engines under this section, you must do the following:

(1) Specify in-use adjustments needed so the engine's level of emission control for each regulated pollutant is equivalent to that from the certified configuration.

(2) Add the following information to the emission control information label specified in §1048.135:

(i) Include instructions describing how to adjust the engine to operate in a way that maintains the effectiveness of the emission-control system.

(ii) State: "THIS ENGINE IS CERTIFIED TO OPERATE IN APPLICATIONS USING NONCOMMERCIAL FUEL. MALADJUSTMENT OF THE ENGINE IS A VIOLATION OF FEDERAL LAW SUBJECT TO CIVIL PENALTY.".

(3) Keep records to document the destinations and quantities of engines produced under this section.

190. A new §1048.630 is added to read as follows:

§1048.630 What are the provisions for exempting engines used solely for competition?

The provisions of this section apply for new engines built on or after January 1, 2006.

(a) Equipment manufacturers may use uncertified engines if the vehicles or equipment in which they are installed will be used solely for competition.

(b) The definition of nonroad engine in 40 CFR 1068.30 excludes engines used solely for competition. These engines are not required to comply with this part 1048 or 40 CFR part 89, but 40 CFR 1068.101 prohibits the use of competition engines for noncompetition purposes.

(c) We consider a vehicle or piece of equipment to be one that will be used solely for competition if it has features that are not easily removed that would make its use other than in competition unsafe, impractical, or highly unlikely.
(d) As an engine manufacturer, your engine is exempt without our prior approval if you have a written request for an exempted engine from the equipment manufacturer showing the basis for believing that the equipment will be used solely for competition. You must permanently label engines exempted under this section to clearly indicate that they are to be used solely for competition. Failure to properly label an engine will void the exemption.
(e) We may discontinue an exemption under this section if we find that engines are not used solely for competition.

191. A new §1048.635 is added to read as follows:

§1048.635 What special provisions apply to branded engines?

The following provisions apply if you identify the name and trademark of another company instead of your own on your emission control information label, as provided by §1048.135(c)(2):
(a) You must have a contractual agreement with the other company that obligates that company to take the following steps:
(1) Meet the emission warranty requirements that apply under §1048.120. This may involve a separate agreement involving reimbursement of warranty-related expenses.
(2) Report all warranty-related information to the certificate holder.
(b) In your application for certification, identify the company whose trademark you will use and describe the arrangements you have made to meet your requirements under this section.
(c) You remain responsible for meeting all the requirements of this chapter, including warranty and defect-reporting provisions.

192. Section 1048.801 is revised to read as follows:

§1048.801 What definitions apply to this part?

The following definitions apply to this part. The definitions apply to all subparts unless we note otherwise. All undefined terms have the meaning the Act gives to them. The definitions follow:

Act means the Clean Air Act, as amended, 42 U.S.C. 7401-7671q.

Adjustable parameter means any device, system, or element of design that someone can adjust (including those which are difficult to access) and that, if adjusted, may affect emissions or engine performance during emission testing or normal in-use operation. This includes, but is not limited to, parameters related to injection timing and fueling rate. You may ask us to exclude a parameter that is difficult to access if it cannot be adjusted to affect emissions without significantly degrading engine performance, or if you otherwise show us that it will not be adjusted in a way that affects emissions during in-use operation.

Aftertreatment means relating to a catalytic converter, particulate filter, or any other system, component, or technology mounted downstream of the exhaust valve (or exhaust port) whose design function is to decrease emissions in the engine exhaust before it is exhausted to the environment. Exhaust-gas recirculation (EGR) and turbochargers are not aftertreatment.

Aircraft means any vehicle capable of sustained air travel above treetop heights.

All-terrain vehicle has the meaning we give in 40 CFR 1051.801.

Amphibious vehicle means a vehicle with wheels or tracks that is designed primarily for operation on land and secondarily for operation in water.

Auxiliary emission-control device means any element of design that senses temperature, motive speed, engine RPM, transmission gear, or any other parameter for the purpose of activating, modulating, delaying, or deactivating the operation of any part of the emission-control system.

Blue Sky Series engine means an engine meeting the requirements of §1048.140.

Brake power means the usable power output of the engine, not including power required to fuel, lubricate, or heat the engine, circulate coolant to the engine, or to operate aftertreatment devices.

Calibration means the set of specifications and tolerances specific to a particular design, version, or application of a component or assembly capable of functionally describing its operation over its working range.

Certification means obtaining a certificate of conformity for an engine family that complies with the emission standards and requirements in this part.

Certified emission level means the highest deteriorated emission level in an engine family for a given pollutant from either transient or steady-state testing.

Compression-ignition means relating to a type of reciprocating, internal-combustion engine that is not a spark-ignition engine.

Constant-speed engine means an engine whose certification is limited to constant-speed operation. Engines whose constant-speed governor function is removed or disabled are no longer constant-speed engines.

Constant-speed operation means engine operation with a governor that controls the operator input to maintain an engine at a reference speed, even under changing load. For example, an isochronous governor changes reference speed temporarily during a load change, then returns the engine to its original reference speed after the engine stabilizes. Isochronous governors typically allow speed changes up to 1.0 %. Another example is a speed-droop governor, which has a fixed reference speed at zero load and allows the reference speed to decrease as load increases. With speed-droop governors, speed typically decreases (3 to 10) % below the reference speed at zero load, such that the minimum reference speed occurs near the engine's point of maximum power.

Crankcase emissions means airborne substances emitted to the atmosphere from any part of the engine crankcase's ventilation or lubrication systems. The crankcase is the housing for the crankshaft and other related internal parts.

Critical emission-related component means any of the following components:

(1) Electronic control units, aftertreatment devices, fuel-metering components, EGR-system components, crankcase-ventilation valves, all components related to charge-air compression and cooling, and all sensors and actuators associated with any of these components.

(2) Any other component whose primary purpose is to reduce emissions.

Designated Compliance Officer means the Manager, Engine Programs Group (6405-J), U.S. Environmental Protection Agency, 1200 Pennsylvania Ave., NW., Washington, DC 20460.

Designated Enforcement Officer means the Director, Air Enforcement Division (2242A), U.S. Environmental Protection Agency, 1200 Pennsylvania Ave., NW.,Washington, DC 20460.

Deteriorated emission level means the emission level that results from applying the appropriate deterioration factor to the official emission result of the emission-data engine.

Deterioration factor means the relationship between emissions at the end of useful life and emissions at the low-hour test point, expressed in one of the following ways:

(1) For multiplicative deterioration factors, the ratio of emissions at the end of useful life to emissions at the low-hour test point.

(2) For additive deterioration factors, the difference between emissions at the end of useful life and emissions at the low-hour test point.

Discrete-mode means relating to the discrete-mode type of steady-state test described in §1048.505.

Emission-control system means any device, system, or element of design that controls or reduces the regulated emissions from an engine.

Emission-data engine means an engine that is tested for certification. This includes engines tested to establish deterioration factors.

Emission-related maintenance means maintenance that substantially affects emissions or is likely to substantially affect emission deterioration.

Engine configuration means a unique combination of engine hardware and calibration within an engine family. Engines within a single engine configuration differ only with respect to normal production variability.

Engine family has the meaning given in §1048.230.

Engine manufacturer means the manufacturer of the engine. See the definition of "manufacturer" in this section.

Equipment manufacturer means a manufacturer of nonroad equipment. All nonroad equipment manufacturing entities under the control of the same person are considered to be a single nonroad equipment manufacturer.

Exempted has the meaning we give in 40 CFR 1068.30.

Excluded means relating to an engine that either:

(1) Has been determined not to be a nonroad engine, as specified in 40 CFR 1068.30; or

(2) Is a nonroad engine that, according to §1048.5, is not subject to this part 1048.

Exhaust-gas recirculation means a technology that reduces emissions by routing exhaust gases that had been exhausted from the combustion chamber(s) back into the engine to be mixed with incoming air before or during combustion. The use of valve timing to increase the amount of residual exhaust gas in the combustion chamber(s) that is mixed with incoming air before or during combustion is not considered exhaust-gas recirculation for the purposes of this part.

Fuel system means all components involved in transporting, metering, and mixing the fuel from the fuel tank to the combustion chamber(s), including the fuel tank, fuel tank cap, fuel pump, fuel filters, fuel lines, carburetor or fuel-injection components, and all fuel-system vents.

Fuel type means a general category of fuels such as gasoline or natural gas. There can be multiple grades within a single fuel type, such as winter-grade and summer-grade gasoline.

Good engineering judgment has the meaning we give in 40 CFR 1068.30. See 40 CFR 1068.5 for the administrative process we use to evaluate good engineering judgment.

High-cost warranted part means a component covered by the emission-related warranty with a replacement cost (at the time of certification) exceeding $400 (in 1998 dollars). Adjust this value using the most recent annual average consumer price index information published by the U.S. Bureau of Labor Statistics. For this definition, replacement cost includes the retail cost of the part plus labor and standard diagnosis.

High-load engine means an engine for which the engine manufacturer can provide clear evidence that operation below 75 percent of maximum load in it's final application will be rare.

Hydrocarbon (HC) means the hydrocarbon group on which the emission standards are based for each fuel type, as described in §1048.101(e).

Identification number means a unique specification (for example, a model number/serial number combination) that allows someone to distinguish a particular engine from other similar engines.

Intermediate test speed has the meaning we give in 40 CFR 1065.515.

Low-hour means relating to an engine with stabilized emissions and represents the undeteriorated emission level. This would generally involve less than 300 hours of operation.

Manufacturer has the meaning given in section 216(1) of the Act. In general, this term includes any person who manufactures an engine, vehicle, or piece of equipment for sale in the United States or otherwise introduces a new nonroad engine into commerce in the United States. This includes importers who import engines, equipment, or vehicles for resale.

Marine engine means a nonroad engine that is installed or intended to be installed on a marine vessel. This includes a portable auxiliary engine only if its fueling, cooling, or exhaust system is an integral part of the vessel. There are two kinds of marine engines:

(1) Propulsion marine engine means a marine engine that moves a vessel through the water or directs the vessel's movement.

(2) Auxiliary marine engine means a marine engine not used for propulsion.

Marine vessel has the meaning given in 1 U.S.C. 3, except that it does not include amphibious vehicles. The definition in 1 U.S.C. 3 very broadly includes every craft capable of being used as a means of transportation on water.

Maximum engine power has one of the following meanings:

(1) For engines at or below 30 kW, maximum engine power has the meaning given in 40 CFR 90.2.

(2) For engines above 30 kW, maximum engine power has the meaning given in 40 CFR 1039.140.

Maximum test speed has the meaning we give in 40 CFR 1065.515.

Maximum test torque has the meaning we give in 40 CFR 1065.1001.

Model year means one of the following things:

(1) For freshly manufactured equipment and engines (see definition of "new nonroad engine," paragraph (1)), model year means one of the following:

(i) Calendar year.

(ii) Your annual new model production period if it is different than the calendar year. This must include January 1 of the calendar year for which the model year is named. It may not begin before January 2 of the previous calendar year and it must end by December 31 of the named calendar year.

(2) For an engine that is converted to a nonroad engine after being placed into service as a motor-vehicle engine or a stationary engine, model year means the calendar year in which the engine was originally produced (see definition of "new nonroad engine," paragraph (2)).

(3) For a nonroad engine excluded under §1048.5 that is later converted to operate in an application that is not excluded, model year means the calendar year in which the engine was originally produced (see definition of "new nonroad engine," paragraph (3)).

(4) For engines that are not freshly manufactured but are installed in new nonroad equipment, model year means the calendar year in which the engine is installed in the new nonroad equipment (see definition of "new nonroad engine," paragraph (4)).

(5) For imported engines:

(i) For imported engines described in paragraph (5)(i) of the definition of "new nonroad engine," <u>model year</u> has the meaning given in paragraphs (1) through (4) of this definition.

(ii) [Reserved]

<u>Motor vehicle</u> has the meaning we give in 40 CFR 85.1703(a). In general, motor vehicle means any vehicle that EPA deems to be capable of safe and practical use on streets or highways that has a maximum ground speed above 40 kilometers per hour (25 miles per hour) over level, paved surfaces.

<u>New nonroad engine</u> means any of the following things:

(1) A freshly manufactured nonroad engine for which the ultimate purchaser has never received the equitable or legal title. This kind of engine might commonly be thought of as "brand new." In the case of this paragraph (1), the engine becomes new when it is fully assembled for the first time. The engine is no longer new when the ultimate purchaser receives the title or the product is placed into service, whichever comes first.

(2) An engine originally manufactured as a motor-vehicle engine or a stationary engine that is later intended to be used in a piece of nonroad equipment. In this case, the engine is no longer a motor-vehicle or stationary engine and becomes a "new nonroad engine". The engine is no longer new when it is placed into nonroad service.

(3) A nonroad engine that has been previously placed into service in an application we exclude under §1048.5, where that engine is installed in a piece of equipment that is covered by this part 1048. The engine is no longer new when it is placed into nonroad service covered by this part 1048. For example, this would apply to a marine-propulsion engine that is no longer used in a marine vessel.

(4) An engine not covered by paragraphs (1) through (3) of this definition that is intended to be installed in new nonroad equipment. The engine is no longer new when the ultimate purchaser receives a title for the equipment or the product is placed into service, whichever comes first. This generally includes installation of used engines in new equipment.

(5) An imported nonroad engine, subject to the following provisions:

(i) An imported nonroad engine covered by a certificate of conformity issued under this part that meets the criteria of one or more of paragraphs (1) through (4) of this definition, where the original engine manufacturer holds the certificate, is new as defined by those applicable paragraphs.

(ii) An imported nonroad engine covered by a certificate of conformity issued under this part, where someone other than the original engine manufacturer holds the certificate (such as when the engine is modified after its initial assembly), becomes new when it is imported. It is no longer new when the ultimate purchaser receives a title for the engine or it is placed into service, whichever comes first.

(iii) An imported nonroad engine that is not covered by a certificate of conformity issued under this part at the time of importation is new, but only if it was produced on or after January 1, 2004. This addresses uncertified engines and equipment initially placed into service that someone seeks to import into the United States. Importation of this kind of new nonroad engine (or equipment containing such an engine) is generally prohibited by 40 CFR part 1068.

<u>New nonroad equipment</u> means either of the following things:

(1) A nonroad piece of equipment for which the ultimate purchaser has never received the equitable or legal title. The product is no longer new when the ultimate purchaser receives this title or the product is placed into service, whichever comes first.
(2) An imported nonroad piece of equipment with an engine not covered by a certificate of conformity issued under this part at the time of importation and manufactured after January 1, 2004.

Noncommercial fuel means a combustible product that is not marketed as a commercial fuel, but is used as a fuel for nonroad engines. For example, this includes methane that is produced and released from landfills or oil wells, or similar unprocessed fuels that are not intended to meet any otherwise applicable fuel specifications. See §1048.615 for provisions related to engines designed to burn noncommercial fuels.

Noncompliant engine means an engine that was originally covered by a certificate of conformity, but is not in the certified configuration or otherwise does not comply with the conditions of the certificate.

Nonconforming engine means an engine not covered by a certificate of conformity that would otherwise be subject to emission standards.

Nonmethane hydrocarbon means the difference between the emitted mass of total hydrocarbons and the emitted mass of methane.

Nonroad means relating to nonroad engines or equipment that includes nonroad engines.

Nonroad engine has the meaning we give in 40 CFR 1068.30. In general this means all internal-combustion engines except motor vehicle engines, stationary engines, engines used solely for competition, or engines used in aircraft. This part does not apply to all nonroad engines (see §1048.5).

Nonroad equipment means a piece of equipment that is powered by one or more nonroad engines.

Off-highway motorcycle has the meaning we give in 40 CFR 1051.801. (Note: highway motorcycles are regulated under 40 CFR part 86.)

Official emission result means the measured emission rate for an emission-data engine on a given duty cycle before the application of any deterioration factor, but after the applicability of regeneration adjustment factors.

Oxides of nitrogen has the meaning we give in 40 CFR part 1065.

Piece of equipment means any vehicle, vessel, or other type of equipment using engines to which this part applies.

Placed into service means put into initial use for its intended purpose.

Point of first retail sale means the location at which the initial retail sale occurs. This generally means an equipment dealership, but may also include an engine seller or distributor in cases where loose engines are sold to the general public for uses such as replacement engines.

Ramped-modal means relating to the ramped-modal type of steady-state test described in §1048.505.

Rated speed means the maximum full-load governed speed for governed engines and the speed of maximum power for ungoverned engines.

Revoke has the meaning we give in 40 CFR 1068.30.

Round means to round numbers according to NIST Special Publication 811(incorporated by reference in §1048.810), unless otherwise specified.

Scheduled maintenance means adjusting, repairing, removing, disassembling, cleaning, or replacing components or systems periodically to keep a part or system from failing, malfunctioning, or wearing prematurely. It also may mean actions you expect are necessary to correct an overt indication of failure or malfunction for which periodic maintenance is not appropriate.

Severe-duty application includes concrete saws, concrete pumps, and any other application where an engine manufacturer can provide clear evidence that the majority of installations need air-cooled engines as a result of operation in a severe-duty environment.

Severe-duty engine means an engine from an engine family in which the majority of engines are installed in severe-duty applications.

Small-volume engine manufacturer means a company with fewer than 200 employees. This includes any employees working for parent or subsidiary companies.

Snowmobile has the meaning we give in 40 CFR 1051.801.

Spark-ignition means relating to a gasoline-fueled engine or any other type of engine with a spark plug (or other sparking device) and with operating characteristics significantly similar to the theoretical Otto combustion cycle. Spark-ignition engines usually use a throttle to regulate intake air flow to control power during normal operation.

Steady-state means relating to emission tests in which engine speed and load are held at a finite set of essentially constant values. Steady-state tests are either discrete-mode tests or ramped-modal tests.

Stoichiometry means the proportion of a mixture of air and fuel such that the fuel is fully oxidized with no remaining oxygen. For example, stoichiometric combustion in gasoline engines typically occurs at an air-fuel mass ratio of about 14.7.

Suspend has the meaning we give in 40 CFR 1068.30.

Test engine means an engine in a test sample.

Test sample means the collection of engines selected from the population of an engine family for emission testing. This may include testing for certification, production-line testing, or in-use testing.

Tier 1 means relating to the emission standards and other requirements that apply beginning with the 2004 model year.

Tier 2 means relating to the emission standards and other requirements that apply beginning with the 2007 model year.

Total hydrocarbon means the combined mass of organic compounds measured by the specified procedure for measuring total hydrocarbon, expressed as a hydrocarbon with a hydrogen-to-carbon mass ratio of 1.85:1.

Total hydrocarbon equivalent means the sum of the carbon mass contributions of non-oxygenated hydrocarbons, alcohols and aldehydes, or other organic compounds that are measured separately as contained in a gas sample, expressed as exhaust hydrocarbon from petroleum-fueled engines. The hydrogen-to-carbon ratio of the equivalent hydrocarbon is 1.85:1.

Ultimate purchaser means, with respect to any new nonroad equipment or new nonroad engine, the first person who in good faith purchases such new nonroad equipment or new nonroad engine for purposes other than resale.

United States has the meaning we give in 40 CFR 1068.30.

Upcoming model year means for an engine family the model year after the one currently in production.

U.S.-directed production volume means the number of engine units, subject to the requirements of this part, produced by a manufacturer for which the manufacturer has a reasonable assurance that sale was or will be made to ultimate purchasers in the United States.

Useful life means the period during which the engine is designed to properly function in terms of reliability and fuel consumption, without being remanufactured, specified as a number of hours of operation or calendar years, whichever comes first. It is the period during which a new nonroad engine is required to comply with all applicable emission standards. See §1048.101(g).

Variable-speed engine means an engine that is not a constant-speed engine.

Variable-speed operation means engine operation that does not meet the definition of constant-speed operation.

Void has the meaning we give in 40 CFR 1068.30.

Volatile liquid fuel means any fuel other than diesel or biodiesel that is a liquid at atmospheric pressure and has a Reid Vapor Pressure higher than 2.0 pounds per square inch.

Wide-open throttle means maximum throttle opening. Unless this is specified at a given speed, it refers to maximum throttle opening at maximum speed. For electronically controlled or other engines with multiple possible fueling rates, wide-open throttle also means the maximum fueling rate at maximum throttle opening under test conditions.

We (us, our) means the Administrator of the Environmental Protection Agency and any authorized representatives.

193. Section 1048.805 is amended by adding "NIST" to the table in alphabetical order to read as follows:

§1048.805 What symbols, acronyms, and abbreviations does this part use?

* * * * *

* * * * * * *
NIST National Institute of Standards and Technology.
* * * * * * *

194. Section 1048.810 is amended by revising the introductory text and paragraphs (a) and(b) to read as follows:

§1048.810 What materials does this part reference?

Documents listed in this section have been incorporated by reference into this part. The Director of the Federal Register approved the incorporation by reference as prescribed in 5 U.S.C. 552(a) and 1 CFR part 51. Anyone may inspect copies at the U.S. EPA, Air and Radiation Docket and Information Center, 1301 Constitution Ave., NW., Room B102, EPA West Building, Washington, DC 20460 or at the National Archives and Records Administration (NARA). For information on the availability of this material at NARA, call 202-741-6030, or go to: http://www.archives.gov/federal_register/code_of_federal_regulations/ibr_locations.html.

(a) NIST material. Table 1 of this section lists material from the National Institute of Standards and Technology that we have incorporated by reference. The first column lists the number and name of the material. The second column lists the sections of this part where we reference it. Anyone may purchase copies of these materials from the Government Printing Office, Washington, DC 20402 or download them from the Internet at http://physics.nist.gov/Pubs/SP811/. Table 1 follows:

Table 1 of §1048.810—NIST Materials

Document number and name	Part 1048 reference
NIST Special Publication 811, Guide for the Use of the International System of Units (SI), 1995 Edition.	1048.801

(b) SAE material. Table 2 of this section lists material from the Society of Automotive Engineering that we have incorporated by reference. The first column lists the number and name of the material. The second column lists the sections of this part where we reference it. Anyone may purchase copies of these materials from the Society of Automotive Engineers, 400 Commonwealth Drive, Warrendale, PA 15096. Table 2 follows:

Table 2 of §1048.810—SAE Materials

Document number and name	**Part 1048 reference**
SAE J1930, Electrical/Electronic Systems Diagnostic Terms, Definitions, Abbreviations, and Acronyms, revised May 1998.	1048.135
SAE J2260, Nonmetallic Fuel System Tubing with One or More Layers, November 1996.	1048.105

* * * * *

195. Section 1048.815 is revised to read as follows:

§1048.815 What provisions apply to confidential information?

(a) Clearly show what you consider confidential by marking, circling, bracketing, stamping, or some other method.

(b) We will store your confidential information as described in 40 CFR part 2. Also, we will disclose it only as specified in 40 CFR part 2. This applies both to any information you send us and to any information we collect from inspections, audits, or other site visits.

(c) If you send us a second copy without the confidential information, we will assume it contains nothing confidential whenever we need to release information from it.

(d) If you send us information without claiming it is confidential, we may make it available to the public without further notice to you, as described in 40 CFR 2.204.

196. Section 1048.820 is revised to read as follows:

§1048.820 How do I request a hearing?

(a) You may request a hearing under certain circumstances, as described elsewhere in this part. To do this, you must file a written request, including a description of your objection and any supporting data, within 30 days after we make a decision.

(b) For a hearing you request under the provisions of this part, we will approve your request if we find that your request raises a substantial factual issue.

(c) If we agree to hold a hearing, we will use the procedures specified in 40 CFR part 1068, subpart G.

PART 1051—CONTROL OF EMISSIONS FROM RECREATIONAL ENGINES AND VEHICLES

197. The authority citation for part 1051 is revised to read as follows:

Authority: 42 U.S.C. 7401 - 7671q.

198. The heading for subpart A is revised to read as follows:

Subpart A—Overview and Applicability

199. Section 1051.1 is revised to read as follows:

§1051.1 Does this part apply for my vehicles or engines?

(a) The regulations in this part 1051 apply for all the following new recreational vehicles or new engines used in the following recreational vehicles, except as provided in §1051.5:

(1) Snowmobiles.

(2) Off-highway motorcycles.

(3) All-terrain vehicles (ATVs).

(4) Offroad utility vehicles with engines with displacement less than or equal to 1000 cc, maximum engine power less than or equal to 30 kW, and maximum vehicle speed of 25 miles per hour or higher. Offroad utility vehicles that are subject to this part are subject to the same requirements as ATVs. This means that any requirement that applies to ATVs also applies to these offroad utility vehicles, without regard to whether the regulatory language mentions offroad utility vehicles.

(b) In certain cases, the regulations in this part 1051 apply to new engines under 50 cc used in motorcycles that are motor vehicles. See 40 CFR 86.447-2006 or 86.448-2006 for provisions related to this allowance.

(c) This part 1051 applies for new recreational vehicles starting in the 2006 model year, except as described in subpart B of this part. You need not follow this part for vehicles you produce before the 2006 model year, unless you certify voluntarily. See §§1051.103 through 1051.110, §1051.145, and the definition of "model year" in §1051.801 for more information about the timing of the requirements.

(d) The requirements of this part begin to apply when a vehicle is new. See the definition of "new" in §1051.801 for more information. In some cases, vehicles or engines that have been previously used may be considered "new" for the purposes of this part.

(e) The evaporative emission requirements of this part apply to highway motorcycles, as specified in 40 CFR part 86, subpart E.

200. Section 1051.5 is revised to read as follows:

§1051.5 Which engines are excluded from this part's requirements?

(a) You may exclude vehicles with compression-ignition engines. See 40 CFR part 89 for regulations that cover these engines.

(b) We may require you to label an engine or vehicle (or both) if this section excludes it and other requirements in this chapter do not apply.

201. Section 1051.10 is revised to read as follows:

§1051.10 How is this part organized?

The regulations in this part 1051 contain provisions that affect both vehicle manufacturers and others. However, the requirements of this part are generally addressed to the vehicle manufacturer. The term "you" generally means the vehicle manufacturer, as defined in §1051.801. This part 1051 is divided into the following subparts:

(a) Subpart A of this part defines the applicability of part 1051 and gives an overview of regulatory requirements.

(b) Subpart B of this part describes the emission standards and other requirements that must be met to certify engines under this part. Note that §1051.145 discusses certain interim requirements and compliance provisions that apply only for a limited time.

(c) Subpart C of this part describes how to apply for a certificate of conformity.

(d) Subpart D of this part describes general provisions for testing production-line engines.

(e) [Reserved]

(f) Subpart F of this part describes how to test your engines (including references to other parts of the Code of Federal Regulations).

(g) Subpart G of this part and 40 CFR part 1068 describe requirements, prohibitions, and other provisions that apply to engine manufacturers, equipment manufacturers, owners, operators, rebuilders, and all others.

(h) Subpart H of this part describes how you may generate and use emission credits to certify your engines.

(i) Subpart I of this part contains definitions and other reference information.

202. Section 1051.15 is revised to read as follows:

§1051.15 Do any other regulation parts apply to me?

(a) Parts 86 and 1065 of this chapter describe procedures and equipment specifications for testing vehicles and engines. Subpart F of this part 1051 describes how to apply the provisions of parts 86 and 1065 of this chapter to determine whether vehicles meet the emission standards in this part.

(b) The requirements and prohibitions of part 1068 of this chapter apply to everyone, including anyone who manufactures, imports, installs, owns, operates, or rebuilds any of the vehicles subject to this part 1051, or vehicles containing these engines. Part 1068 of this chapter describes general provisions, including these seven areas:

(1) Prohibited acts and penalties for manufacturers and others.

(2) Rebuilding and other aftermarket changes.

(3) Exclusions and exemptions for certain vehicles and engines.

(4) Importing vehicles and engines.

(5) Selective enforcement audits of your production.

(6) Defect reporting and recall.

(7) Procedures for hearings.

(c) Other parts of this chapter apply if referenced in this part.

203. Section 1051.101 is amended by revising paragraphs (a)(1), (a)(2), (c), and (f) to read as follows:

§1051.101 What emission standards and other requirements must my vehicles meet?

(a) * * *

(1) The applicable exhaust emission standards in §1051.103, §1051.105, §1051.107, or §1051.145.

(i) For snowmobiles, see §1051.103.

(ii) For off-highway motorcycles, see §1051.105.

(iii) For all-terrain vehicles and offroad utility vehicles subject to this part, see §1051.107 and §1051.145.

(2) The evaporative emission standards in §1051.110.

* * * * *

(c) These standards and requirements apply to all testing, including certification, production-line, and in-use testing.

* * * * *

(f) As described in §1051.1(a)(4), offroad utility vehicles that are subject to this part are subject to the same requirements as ATVs.

204. Section 1051.103 is amended by revising paragraph (a)(1) before the table and paragraphs (b) introductory text and (c) introductory text to read as follows:

§1051.103 What are the exhaust emission standards for snowmobiles?

(a) * * *

(1) Follow Table 1 of this section for exhaust emission standards. You may generate or use emission credits under the averaging, banking, and trading (ABT) program, as described in subpart H of this part. This requires that you specify a family emission limit for each pollutant you include in the ABT program for each engine family. These family emission limits serve as the emission standards for the engine family with respect to all required testing instead of the standards specified in this section. An engine family meets emission standards even if its family emission limit is higher than the standard, as long as you show that the whole averaging set of applicable engine families meet the applicable emission standards using emission credits, and the vehicles within the family meet the family emission limit. Table 1 also shows the maximum value you may specify for a family emission limit, as follows:

* * * * *

(b) The exhaust emission standards in this section apply for snowmobiles using the fuel type on which they are designed to operate. You must meet the numerical emission standards for hydrocarbons in this section based on the following types of hydrocarbon emissions for snowmobiles powered by the following fuels:

* * * * *

(c) Your snowmobiles must meet emission standards over their full useful life. The minimum useful life is 8,000 kilometers, 400 hours of engine operation, or five calendar years, whichever comes first. You must specify a longer useful life in terms of kilometers and hours for the engine family if the average service life of your vehicles is longer than the minimum value, as follows:

* * * * *

205. Section 1051.105 is amended by revising paragraph (a)(1) before the table and paragraphs (a)(3), (b) introductory text, and (c) introductory text to read as follows:

§1051.105 What are the exhaust emission standards for off-highway motorcycles?

(a) * * *

(1) Follow Table 1 of this section for exhaust emission standards. You may generate or use emission credits under the averaging, banking, and trading (ABT) program for HC+NOx and/or CO emissions, as described in subpart H of this part. This requires that you specify a family emission limit for each pollutant you include in the ABT program for each engine family. These family emission limits serve as the emission standards for the engine family with respect to all required testing instead of the standards specified in this section. An engine family meets emission standards even if its family emission limit is higher than the standard, as long as you show that the whole averaging set of applicable engine families meet the applicable emission standards using emission credits, and the vehicles within the family meet the family emission limit. The phase-in values specify the percentage of your U.S.-directed production that must comply with the emission standards for those model years. Calculate this compliance percentage based on a simple count of production units within the engine family. Table 1 follows:

* * * * *

(3) You may certify off-highway motorcycles with engines that have total displacement of 70 cc or less to the exhaust emission standards in §1051.615 instead of certifying them to the exhaust emission standards of this section. Count all such vehicles in the phase-in (percent) requirements of this section.

(b) The exhaust emission standards in this section apply for off-highway motorcycles using the fuel type on which they are designed to operate. You must meet the numerical emission standards for hydrocarbons in this section based on the following types of hydrocarbon emissions for off-highway motorcycles powered by the following fuels:

* * * * *

(c) Your off-highway motorcycles must meet emission standards over their full useful life. For off-highway motorcycles with engines that have total displacement greater than 70 cc, the minimum useful life is 10,000 kilometers or five years, whichever comes first. For off-highway motorcycles with engines that have total displacement of 70 cc or less, the minimum useful life is 5,000 kilometers or five years, whichever comes first. You must specify a longer useful life for the engine family in terms of kilometers if the average service life of your vehicles is longer than the minimum value, as follows:

* * * * *

206. Section 1051.107 is amended by revising paragraphs (a), (b) introductory text, and (c) introductory text to read as follows:

§1051.107 What are the exhaust emission standards for all-terrain vehicles (ATVs) and offroad utility vehicles?

* * * * *

(a) Apply the exhaust emission standards in this section by model year. Measure emissions with the ATV test procedures in subpart F of this part.

(1) Follow Table 1 of this section for exhaust emission standards. You may generate or use emission credits under the averaging, banking, and trading (ABT) program for HC+NOx emissions, as described in subpart H of this part. This requires that you specify a family emission limit for each pollutant you include in the ABT program for each engine family. These family emission limits serve as the emission standards for the engine family with respect to all required testing instead of the standards specified in this section. An engine family meets emission standards even if its family emission limit is higher than the standard, as long as you show that the whole averaging set of applicable engine families meet the applicable emission standards using emission credits, and the vehicles within the family meet the family emission limit. Table 1 also shows the maximum value you may specify for a family emission limit. The phase-in values in the table specify the percentage of your total U.S.-directed production that must comply with the emission standards for those model years. Calculate this compliance percentage based on a simple count of production units within the engine family. This applies to your total production of ATVs and offroad utility vehicles that are subject to the standards of this part; including both ATVs and offroad utility vehicles subject to the standards of this section and ATVs and offroad utility vehicles certified to the standards of other sections in this part 1051 (such as §1051.615, but not including vehicles certified under other parts in this chapter (such as 40 CFR part 90). Table 1 follows:

Table 1 of §1051.107—
Exhaust Emission Standards for ATVs (g/km)

Phase	Model Year	Phase-in	Emission standards		Maximum allowable Family Emission Limits	
			HC+NOx	CO	HC+NOx	CO
Phase 1	2006	50%	1.5	35	20.0	—
	2007 and later	100%	1.5	35	20.0	—

(2) You may certify ATVs with engines that have total displacement of less than 100 cc to the exhaust emission standards in §1051.615 instead of certifying them to the exhaust emission standards of this section. Count all such vehicles in the phase-in (percent) requirements of this section.

(b) The exhaust emission standards in this section apply for ATVs using the fuel type on which they are designed to operate. You must meet the numerical emission standards for hydrocarbons in this section based on the following types of hydrocarbon emissions for ATVs powered by the following fuels:

* * * * *

(c) Your ATVs must meet emission standards over their full useful life (§1051.240 describes how to use deterioration factors to show this). For ATVs with engines that have total displacement of 100 cc or greater, the minimum useful life is 10,000 kilometers, 1000 hours of engine operation, or five years, whichever comes first. For ATVs with engines that have total displacement of less than 100 cc, the minimum useful life is 5,000 kilometers, 500 hours of engine operation, or five years, whichever comes first. You must specify a longer useful life for the engine family in terms of kilometers and hours if the average service life of your vehicles is longer than the minimum value, as follows:

* * * * *

207. Section 1051.110 is amended by revising paragraph (a) to read as follows:

§1051.110 What evaporative emission standards must my vehicles meet?

* * * * *

(a) Beginning with the 2008 model year, permeation emissions from your vehicle's fuel tank(s) may not exceed 1.5 grams per square-meter per day when measured with the test procedures for tank permeation in subpart F of this part. You may generate or use emission credits under the averaging, banking, and trading (ABT) program, as described in subpart H of this part.

* * * * *

208. Section 1051.115 is amended by removing and reserving paragraph (b) and revising paragraphs (a), (c), and (f) to read as follows:

§1051.115 What other requirements must my vehicles meet?

* * * * *

(a) Closed crankcase. Crankcase emissions may not be discharged directly into the ambient atmosphere from any vehicle.

(b) [Reserved]

(c) Adjustable parameters. Vehicles that have adjustable parameters must meet all the requirements of this part for any adjustment in the physically adjustable range. Note that parameters that control the air-fuel ratio may be treated separately under paragraph (d) of this section. An operating parameter is not considered adjustable if you permanently seal it or if it is not normally accessible using ordinary tools. We may require that you set adjustable parameters to any specification within the adjustable range during any testing, including certification testing, production-line testing, or in-use testing.

* * * * *

(f) Defeat devices. You may not equip your vehicles with a defeat device. A defeat device is an auxiliary emission-control device that reduces the effectiveness of emission controls under conditions that the vehicle may reasonably be expected to encounter during normal operation and use. This does not apply to auxiliary emission-control devices you identify in your certification application if any of the following is true:

(1) The conditions of concern were substantially included in the applicable test procedures described in subpart F of this part.

(2) You show your design is necessary to prevent vehicle damage or accidents.

(3) The reduced effectiveness applies only to starting the engine.

* * * * *

209. Section 1051.120 is revised to read as follows:

§1051.120 What emission-related warranty requirements apply to me?

(a) General requirements. You must warrant to the ultimate purchaser and each subsequent purchaser that the new engine, including all parts of its emission-control system, meets two conditions:

(1) It is designed, built, and equipped so it conforms at the time of sale to the ultimate purchaser with the requirements of this part.

(2) It is free from defects in materials and workmanship that may keep it from meeting these requirements.

(b) Warranty period. Your emission-related warranty must be valid for at least 50 percent of the vehicle's minimum useful life in kilometers or hours of engine operation (where applicable), or at least 30 months, whichever comes first. You may offer an emission-related warranty more generous than we require. The emission-related warranty for the engine may not be shorter than any published warranty you offer without charge for the engine. Similarly, the emission-related warranty for any component may not be shorter than any published warranty you offer without charge for that component. If you provide an extended warranty to individual owners for any components covered in paragraph (c) of this section for an additional charge, your emission-related warranty must cover those components for those owners to the same degree. If a vehicle has no odometer, base warranty periods in this paragraph (b) only on the vehicle's age (in years). The warranty period begins when the engine is placed into service.

(c) Components covered. The emission-related warranty covers all components whose failure would increase an engine's emissions of any pollutant. This includes components listed in 40 CFR part 1068, Appendix I, and components from any other system you develop to control emissions. The emission-related warranty covers these components even if another company produces the component. Your emission-related warranty does not cover components whose failure would not increase an engine's emissions of any pollutant.

(d) Limited applicability. You may deny warranty claims under this section if the operator caused the problem through improper maintenance or use, as described in 40 CFR 1068.115. You may ask us to allow you to exclude from your emission-related warranty certified vehicles that have been used significantly for competition, especially certified motorcycles that meet at least four of the criteria in §1051.620(b)(1).

(e) Owners manual. Describe in the owners manual the emission-related warranty provisions from this section that apply to the engine.

210. Section 1051.125 is revised to read as follows:

§1051.125 What maintenance instructions must I give to buyers?

Give the ultimate purchaser of each new vehicle written instructions for properly maintaining and using the vehicle, including the emission-control system. The maintenance instructions also apply to service accumulation on your emission-data vehicles, as described in §1051.240, §1051.245, and 40 CFR part 1065.

(a) Critical emission-related maintenance. Critical emission-related maintenance includes any adjustment, cleaning, repair, or replacement of critical emission-related components. This may also include additional emission-related maintenance that you determine is critical if we approve it in advance. You may schedule critical emission-related maintenance on these components if you meet the following conditions:

(1) You demonstrate that the maintenance is reasonably likely to be done at the recommended intervals on in-use vehicles. We will accept scheduled maintenance as reasonably likely to occur if you satisfy any of the following conditions:

(i) You present data showing that, if a lack of maintenance increases emissions, it also unacceptably degrades the vehicle's performance.

(ii) You present survey data showing that at least 80 percent of vehicles in the field get the maintenance you specify at the recommended intervals.

(iii) You provide the maintenance free of charge and clearly say so in maintenance instructions for the customer.

(iv) You otherwise show us that the maintenance is reasonably likely to be done at the recommended intervals.

(2) You may not schedule critical emission-related maintenance within the minimum useful life period for aftertreatment devices, pulse-air valves, fuel injectors, oxygen sensors, electronic control units, superchargers, or turbochargers.

(b) Recommended additional maintenance. You may recommend any additional amount of maintenance on the components listed in paragraph (a) of this section, as long as you state clearly that these maintenance steps are not necessary to keep the emission-related warranty valid. If operators do the maintenance specified in paragraph (a) of this section, but not the recommended additional maintenance, this does not allow you to disqualify those vehicles from in-use testing or deny a warranty claim. Do not take these maintenance steps during service accumulation on your emission-data vehicles.

(c) Special maintenance. You may specify more frequent maintenance to address problems related to special situations, such as atypical vehicle operation. You must clearly state that this additional maintenance is associated with the special situation you are addressing.

(d) Noncritical emission-related maintenance. You may schedule any amount of emission-related inspection or maintenance that is not covered by paragraph (a) of this section, as long as you state in the owners manual that these steps are not necessary to keep the emission-related warranty valid. If operators fail to do this maintenance, this does not allow you to disqualify those vehicles from in-use testing or deny a warranty claim. Do not take these inspection or maintenance steps during service accumulation on your emission-data vehicles.

(e) Maintenance that is not emission-related. For maintenance unrelated to emission controls, you may schedule any amount of inspection or maintenance. You may also take these inspection or maintenance steps during service accumulation on your emission-data vehicles, as long as they are reasonable and technologically necessary. This might include adding engine oil, or adjusting chain tension, clutch position, or tire pressure. You may perform this nonemission-related maintenance on emission-data vehicles at the least frequent intervals that you recommend to the ultimate purchaser (but not the intervals recommended for severe service).

(f) Source of parts and repairs. State clearly on the first page of your written maintenance instructions that a repair shop or person of the owner's choosing may maintain, replace, or repair emission-control devices and systems. Your instructions may not require components or service identified by brand, trade, or corporate name. Also, do not directly or indirectly condition your warranty on a requirement that the vehicle be serviced by your franchised dealers or any other service establishments with which you have a commercial relationship. You may disregard the requirements in this paragraph (f) if you do one of two things:

(1) Provide a component or service without charge under the purchase agreement.

(2) Get us to waive this prohibition in the public's interest by convincing us the vehicle will work properly only with the identified component or service.

(g) Payment for scheduled maintenance. Owners are responsible for properly maintaining their vehicles. This generally includes paying for scheduled maintenance. However, manufacturers must pay for scheduled maintenance during the useful life if it meets all the following criteria:

(1) Each affected component was not in general use on similar vehicles before the 2006 model year.

(2) The primary function of each affected component is to reduce emissions.

(3) The cost of the scheduled maintenance is more than 2 percent of the price of the vehicle.

(4) Failure to perform the maintenance would not cause clear problems that would significantly degrade the vehicle's performance.

(h) Owners manual. Explain the owner's responsibility for proper maintenance in the owners manual.

211. Section 1051.130 is revised to read as follows:

§1051.130 What installation instructions must I give to vehicle manufacturers?

(a) If you sell an engine for someone else to install in a piece of nonroad equipment, give the engine installer instructions for installing it consistent with the requirements of this part. Include all information necessary to ensure that an engine will be installed in its certified configuration.

(b) Make sure these instructions have the following information:

(1) Include the heading: “Emission-related installation instructions”.

(2) State: “Failing to follow these instructions when installing a certified engine in a piece of nonroad equipment violates federal law (40 CFR 1068.105(b)), subject to fines or other penalties as described in the Clean Air Act.”.

(3) Describe the instructions needed to properly install the exhaust system and any other components. Include instructions consistent with the requirements of §1051.205(r).

(4) Describe the steps needed to comply with the evaporative emission standards in §1051.110.

(5) Describe any limits on the range of applications needed to ensure that the engine operates consistently with your application for certification. For example, if your engines are certified only to the snowmobile standards, tell vehicle manufacturers not to install the engines in other vehicles.

(6) Describe any other instructions to make sure the installed engine will operate according to design specifications in your application for certification. This may include, for example, instructions for installing aftertreatment devices when installing the engines.

(7) State: “If you install the engine in a way that makes the engine’s emission control information label hard to read during normal engine maintenance, you must place a duplicate label on the vehicle, as described in 40 CFR 1068.105.”.

(c) You do not need installation instructions for engines you install in your own vehicles.

(d) Provide instructions in writing or in an equivalent format. For example, you may post instructions on a publicly available website for downloading or printing. If you do not provide the instructions in writing, explain in your application for certification how you will ensure that each installer is informed of the installation requirements.

212. Section 1051.135 is revised to read as follows:

§1051.135 How must I label and identify the vehicles I produce?

Each of your vehicles must have three labels: a vehicle identification number as described in paragraph (a) of this section, an emission control information label as described in paragraphs (b) through (e) of this section, and a consumer information label as described in paragraph (g) of this section.

(a) Assign each vehicle a unique identification number and permanently affix, engrave, or stamp it on the vehicle in a legible way.

(b) At the time of manufacture, affix a permanent and legible emission control information label identifying each vehicle. The label must be–

(1) Attached so it is not removable without being destroyed or defaced.

(2) Secured to a part of the vehicle (or engine) needed for normal operation and not normally requiring replacement.

(3) Durable and readable for the vehicle’s entire life.

(4) Written in English.

(c) The label must—

(1) Include the heading "EMISSION CONTROL INFORMATION".

(2) Include your full corporate name and trademark. You may identify another company and use its trademark instead of yours if you comply with the provisions of §1051.645.

(3) Include EPA’s standardized designation for the exhaust and evaporative engine families, as described in §1051.230.

(4) State the engine’s displacement (in liters) and maximum engine power. You may omit this from the emission control information label if the vehicle is permanently labeled with a unique model name that corresponds to a specific displacement or power configuration. Also, you may omit displacement from the label if all the engines in the engine family have the same per-cylinder displacement and total displacement.

(5) State: "THIS VEHICLE IS CERTIFIED TO OPERATE ON [specify operating fuel or fuels].".

(6) State the date of manufacture [MONTH and YEAR]. You may omit this from the label if you keep a record of the engine-manufacture dates and provide it to us upon request, or if you stamp the date on the engine and print it in the owners manual.

(7) State the exhaust emission standards or FELs to which the vehicles are certified.

(8) Identify the emission-control system. Use terms and abbreviations consistent with SAE J1930 (incorporated by reference in §1051.810). You may omit this information from the label if there is not enough room for it and you put it in the owners manual instead.

(9) List specifications and adjustments for engine tuneups; show the proper position for the transmission during tuneup and state which accessories should be operating.

(10) Identify any requirements for fuel and lubricants. You may omit this information from the label if there is not enough room for it and you put it in the owners manual instead.

(11) State the useful life for your engine family if it is different than the minimum value.

(12) State: "THIS VEHICLE MEETS U.S. EPA REGULATIONS FOR [MODEL YEAR] [SNOWMOBILES or OFF-ROAD MOTORCYCLES or ATVs or OFFROAD UTILITY VEHICLES].".

(d) You may add information to the emission control information label to identify other emission standards that the vehicle meets or does not meet (such as California standards). You may also add other information to ensure that the engine will be properly maintained and used.

(e) You may ask us to approve modified labeling requirements in this part 1051 if you show that it is necessary or appropriate. We will approve your request if your alternate label is consistent with the requirements of this part.

(f) If you obscure the engine label while installing the engine in the equipment, you must place a duplicate label on the equipment. If others install your engine in their equipment in a way that obscures the engine label, we require them to add a duplicate label on the equipment (see 40 CFR 1068.105); in that case, give them the number of duplicate labels they request and keep the following records for at least five years:

(1) Written documentation of the request from the equipment manufacturer.

(2) The number of duplicate labels you send and the date you sent them.

(g) Label every vehicle certified under this part with a removable hang-tag showing its emission characteristics relative to other models. The label should be attached securely to the vehicle before it is offered for sale in such a manner that it would not be accidentally removed prior to sale. Use the applicable equations of this paragraph (g) to determine the normalized emission rate (NER) from the FEL for your vehicle. If the vehicle is certified without using the averaging provisions of subpart H, use the final deteriorated emission level. Round the resulting normalized emission rate for your vehicle to one decimal place. We may specify a standardized format for labels. At a minimum, the tag should include: the manufacturer's name, vehicle model name, engine description (500 cc two-stroke with DFI), the NER, and a brief explanation of the scale (for example, note that 0 is the cleanest and 10 is the least clean).

(1) For snowmobiles, use the following equation:

$$NER = 16.61 \times \log(2.667 \times HC + CO) - 38.22$$

Where:

HC and CO are the cycle-weighted FELs (or emission rates) for hydrocarbons and carbon monoxide in g/kW-hr.

(2)(i) For off-highway motorcycles certified to the standards in § 1051.105, use the equations specified below.

(A) If the vehicle has HC + NOx emissions less than or equal to 2.0 g/km, use the following equation:

NER = 2.500 × (HC+NOx)

Where:

HC+NOx is the FEL (or the sum of the cycle-weighted emission rates) for hydrocarbons and oxides of nitrogen in g/km.

(B) If the vehicle has HC + NOx emissions greater than 2.0 g/km, use the following equation:

NER = 5.000 × log(HC+NOx)+ 3.495

Where:

HC+NOx is the FEL (or the sum of the cycle-weighted emission rates) for hydrocarbons and oxides of nitrogen in g/km.

(ii) For off-highway motorcycles certified to the standards in § 1051.615(b), use the following equation:

NER = 8.782 × log(HC+NOx) – 5.598

Where:

HC+NOx is the FEL (or the sum of the cycle-weighted emission rates) for hydrocarbons and oxides of nitrogen in g/kW-hr.

(3)(i) For ATVs certified to the standards in § 1051.107, use the equations specified below.

(A) If the vehicle has HC + NOx emissions less than or equal to 1.5 g/km, use the following equation:

NER = 3.333 × (HC+NOx)

Where:

HC+NOx is the FEL (or the sum of the cycle-weighted emission rates) for hydrocarbons and oxides of nitrogen in g/km.

(B) If the vehicle has HC + NOx emissions greater than 1.5 g/km, use the following equation:

NER = 4.444 × log(HC+NOx)+4.217

Where:

HC+NOx is the FEL (or the sum of the cycle-weighted emission rates) for hydrocarbons and oxides of nitrogen in g/km.

(ii) For ATVs certified to the standards in § 1051.615(a), use the following equation:

NER = 8.782 × log(HC + NOx) – 7.277

Where:

HC+NOx is the FEL (or the sum of the cycle-weighted emission rates) for hydrocarbons and oxides of nitrogen in g/kW-hr.

213. Section 1051.145 is amended by removing and reserving paragraph (c), adding paragraphs (a)(3)(v) and (a)(3)(vi), and revising paragraphs (b)(3) and (e) to read as follows:

§1051.145 What provisions apply only for a limited time?

* * * * *

(a) * * *

(3) * * *

(v) If your engines do not meet the criteria listed in paragraph (a) of this section, they will be subject to the provisions of this part. Introducing these engines into commerce without a valid exemption or certificate of conformity violates the prohibitions in 40 CFR 1068.101.

(vi) Engines exempted under this paragraph (a)(3) are subject to all the requirements affecting engines under 40 CFR part 90. The requirements and restrictions of 40 CFR part 90 apply to anyone manufacturing these engines, anyone manufacturing equipment that uses these engines, and all other persons in the same manner as other engines subject to 40 CFR part 90.

* * * * *

(b) * * *

(3) For ATVs certified to the standards in this paragraph (b), use the following equations to determine the normalized emission rate required by §1051.135(g):

(i) For engines above 225 cc, use the following equation:

$$NER = 9.898 \times \log(HC + NOx) - 4.898$$

Where:

HC +NOx is the sum of the cycle-weighted emission rates for hydrocarbons and oxides of nitrogen in g/kW-hr.

(ii) For engines below 225 cc, use the following equation:

$$NER = 9.898 \times \log((HC + NOx) \times 0.83) - 4.898$$

Where:

HC +NOx is the sum of the cycle-weighted emission rates for hydrocarbons and oxides of nitrogen in g/kW-hr.

* * * * *

(e) Raw sampling procedures. You may use the raw sampling procedures described in 40 CFR part 91, subparts D and E, for emission testing certain vehicles as follows:

(1) Snowmbile. You may use raw sampling for snowmobiles before the 2010 model year. For 2010 and later model years, you may use these procedures if you show that they produce emission measurements equivalent to the otherwise specified test procedures.

(2) ATV. You may use raw sampling for ATVs certified to the standard in §1051.615 before the 2011 model year. You may use raw sampling for ATVs certified to the standard in §1051.107 before the 2009 model year. For later model years, you may use these procedures if you show that they produce emission measurements equivalent to the otherwise specified test procedures.

* * * * *

214. Section 1051.201 is revised to read as follows:

§1051.201 What are the general requirements for obtaining a certificate of conformity?

(a) You must send us a separate application for a certificate of conformity for each engine family. A certificate of conformity is valid from the indicated effective date until December 31 of the model year for which it is issued.

(b) The application must contain all the information required by this part and must not include false or incomplete statements or information (see §1051.255).

(c) We may ask you to include less information than we specify in this subpart, as long as you maintain all the information required by §1051.250.

(d) You must use good engineering judgment for all decisions related to your application (see 40 CFR 1068.5).

(e) An authorized representative of your company must approve and sign the application.

(f) See §1051.255 for provisions describing how we will process your application.

(g) We may require you to deliver your test vehicles or engines to a facility we designate for our testing (see §1051.235(c)).

215. Section 1051.205 is revised to read as follows:

§1051.205 What must I include in my application?

This section specifies the information that must be in your application, unless we ask you to include less information under §1051.201(c). We may require you to provide additional information to evaluate your application.

(a) Describe the engine family's specifications and other basic parameters of the vehicle's design and emission controls. List the fuel type on which your engines are designed to operate (for example, gasoline, liquefied petroleum gas, methanol, or natural gas). List vehicle configurations and model names that are included in the engine family.

(b) Explain how the emission-control system operates. Describe the evaporative emission controls. Also describe in detail all system components for controlling exhaust emissions, including all auxiliary-emission control devices (AECDs) and all fuel-system components you will install on any production or test vehicle or engine. Identify the part number of each component you describe. For this paragraph (b), treat as separate AECDs any devices that modulate or activate differently from each other. Include all the following:

(1) Give a general overview of the engine, the emission-control strategies, and all AECDs.

(2) Describe each AECD's general purpose and function.

(3) Identify the parameters that each AECD senses (including measuring, estimating, calculating, or empirically deriving the values). Include vehicle-based parameters and state whether you simulate them during testing with the applicable procedures.

(4) Describe the purpose for sensing each parameter.

(5) Identify the location of each sensor the AECD uses.

(6) Identify the threshold values for the sensed parameters that activate the AECD.

(7) Describe the parameters that the AECD modulates (controls) in response to any sensed parameters, including the range of modulation for each parameter, the relationship between the sensed parameters and the controlled parameters and how the modulation achieves the AECD's stated purpose. Use graphs and tables, as necessary.
(8) Describe each AECD's specific calibration details. This may be in the form of data tables, graphical representations, or some other description.
(9) Describe the hierarchy among the AECDs when multiple AECDs sense or modulate the same parameter. Describe whether the strategies interact in a comparative or additive manner and identify which AECD takes precedence in responding, if applicable.
(10) Explain the extent to which the AECD is included in the applicable test procedures specified in subpart F of this part.
(11) Do the following additional things for AECDs designed to protect engines or vehicles:
(i) Identify the engine and/or vehicle design limits that make protection necessary and describe any damage that would occur without the AECD.
(ii) Describe how each sensed parameter relates to the protected components' design limits or those operating conditions that cause the need for protection.
(iii) Describe the relationship between the design limits/parameters being protected and the parameters sensed or calculated as surrogates for those design limits/parameters, if applicable.
(iv) Describe how the modulation by the AECD prevents engines and/or equipment from exceeding design limits.
(v) Explain why it is necessary to estimate any parameters instead of measuring them directly and describe how the AECD calculates the estimated value, if applicable.
(vi) Describe how you calibrate the AECD modulation to activate only during conditions related to the stated need to protect components and only as needed to sufficiently protect those components in a way that minimizes the emission impact.
(c) [Reserved]
(d) Describe the vehicles or engines you selected for testing and the reasons for selecting them.
(e) Describe the test equipment and procedures that you used, including any special or alternate test procedures you used (see §1051.501).
(f) Describe how you operated the emission-data vehicle before testing, including the duty cycle and the extent of engine operation used to stabilize emission levels. Explain why you selected the method of service accumulation. Describe any scheduled maintenance you did.
(g) List the specifications of the test fuel to show that it falls within the required ranges we specify in 40 CFR part 1065.
(h) Identify the engine family's useful life.
(i) Include the maintenance instructions you will give to the ultimate purchaser of each new vehicle (see §1051.125).
(j) Include the emission-related installation instructions you will provide if someone else installs your engines in a vehicle (see §1051.130).
(k) Describe the labels you create to meet the requirements of §1051.135.
(l) Identify the exhaust emission standards or FELs to which you are certifying engines in the engine family.
(m) Identify the engine family's deterioration factors and describe how you developed them (see §1051.245). Present any emission test data you used for this.
(n) State that you operated your emission-data vehicles as described in the application (including the test procedures, test parameters, and test fuels) to show you meet the requirements of this part.
(o) Present emission data to show that you meet emission standards, as follows:
(1) Present emission data for hydrocarbons (such as NMHC or THCE, as applicable), NOx, and CO on an emission-data vehicle to show your vehicles meet the applicable exhaust emission standards we specify in subpart B of this part. Show emission figures before and after applying deterioration factors for each vehicle or engine. If we specify more than one grade of any fuel type (for example, a summer grade and winter grade of gasoline), you need to submit test data only for one grade, unless the regulations of this part specify otherwise for your engine.

(2) Present evaporative test data for HC to show your vehicles meet the evaporative emission standards we specify in subpart B of this part. Show emission figures before and after applying deterioration factors for each vehicle or engine, where applicable. If you did not perform the testing, identify the source of the test data.

(3) Note that §1051.235 and §1051.245 allow you to submit an application in certain cases without new emission data.

(p) Report all test results, including those from invalid tests or from any other tests, whether or not they were conducted according to the test procedures of subpart F of this part. If you measure CO_2, report those emission levels. We may ask you to send other information to confirm that your tests were valid under the requirements of this part and 40 CFR part 1065.

(q) Describe all adjustable operating parameters (see §1051.115(e)), including production tolerances. Include the following in your description of each parameter:

(1) The nominal or recommended setting.

(2) The intended physically adjustable range.

(3) The limits or stops used to establish adjustable ranges.

(4) Information showing why the limits, stops, or other means of inhibiting adjustment are effective in preventing adjustment of parameters on in-use engines to settings outside your intended physically adjustable ranges.

(r) Confirm that your emission-related installation instructions specify how to ensure that sampling of exhaust emissions will be possible after engines are installed in equipment and placed in service. If this cannot be done by simply adding a 20-centimeter extension to the exhaust pipe, show how to sample exhaust emissions in a way that prevents diluting the exhaust sample with ambient air.

(s) Unconditionally certify that all the vehicles and/or engines in the engine family comply with the requirements of this part, other referenced parts of the CFR, and the Clean Air Act.

(t) Include estimates of U.S.-directed production volumes.

(u) Include the information required by other subparts of this part. For example, include the information required by §1051.725 if you participate in the ABT program.

(v) Include other applicable information, such as information specified in this part or part 1068 of this chapter related to requests for exemptions.

216. Section 1051.210 is revised to read as follows:

§1051.210 May I get preliminary approval before I complete my application?

If you send us information before you finish the application, we will review it and make any appropriate determinations, especially for questions related to engine family definitions, auxiliary emission-control devices, deterioration factors, testing for service accumulation, and maintenance. Decisions made under this section are considered to be preliminary approval, subject to final review and approval. If you request preliminary approval related to the upcoming model year or the model year after that, we will make best-efforts to make the appropriate determinations as soon as practicable. We will generally not provide preliminary approval related to a future model year more than two years ahead of time.

217. Section 1051.215 is removed.

218. Section 1051.220 is revised to read as follows:

§1051.220 How do I amend the maintenance instructions in my application?

You may amend your emission-related maintenance instructions after you submit your application for certification, as long as the amended instructions remain consistent with the provisions of §1051.125. You must send the Designated Compliance Officer a request to amend your application for certification for an engine family if you want to change the emission-related maintenance instructions in a way that could affect emissions. In your request,

describe the proposed changes to the maintenance instructions. We will disapprove your request if we determine that the amended instructions are inconsistent with maintenance you performed on emission-data vehicles.
(a) If you are decreasing the specified maintenance, you may distribute the new maintenance instructions to your customers 30 days after we receive your request, unless we disapprove your request. We may approve a shorter time or waive this requirement.
(b) If your requested change would not decrease the specified maintenance, you may distribute the new maintenance instructions anytime after you send your request. For example, this paragraph (b) would cover adding instructions to increase the frequency of a maintenance step for engines in severe-duty applications.
(c) You need not request approval if you are making only minor corrections (such as correcting typographical mistakes), clarifying your maintenance instructions, or changing instructions for maintenance unrelated to emission control.

219. Section 1051.225 is revised to read as follows:

§1051.225 How do I amend my application for certification to include new or modified vehicles or to change an FEL?

Before we issue you a certificate of conformity, you may amend your application to include new or modified vehicle configurations, subject to the provisions of this section. After we have issued your certificate of conformity, you may send us an amended application requesting that we include new or modified vehicle configurations within the scope of the certificate, subject to the provisions of this section. You must amend your application if any changes occur with respect to any information included in your application.
(a) You must amend your application before you take any of the following actions:
(1) Add a vehicle (that is, an additional vehicle configuration) to an engine family. In this case, the vehicle added must be consistent with other vehicles in the engine family with respect to the criteria listed in §1051.230.
(2) Change a vehicle already included in an engine family in a way that may affect emissions, or change any of the components you described in your application for certification. This includes production and design changes that may affect emissions any time during the engine's lifetime.
(3) Modify an FEL for an engine family, as described in paragraph (f) of this section.
(b) To amend your application for certification, send the Designated Compliance Officer the following information:
(1) Describe in detail the addition or change in the vehicle model or configuration you intend to make.
(2) Include engineering evaluations or data showing that the amended engine family complies with all applicable requirements. You may do this by showing that the original emission-data vehicle is still appropriate with respect to showing compliance of the amended family with all applicable requirements.
(3) If the original emission-data vehicle for the engine family is not appropriate to show compliance for the new or modified vehicle, include new test data showing that the new or modified vehicle meets the requirements of this part.
(c) We may ask for more test data or engineering evaluations. You must give us these within 30 days after we request them.
(d) For engine families already covered by a certificate of conformity, we will determine whether the existing certificate of conformity covers your new or modified vehicle. You may ask for a hearing if we deny your request (see §1051.820).
(e) For engine families already covered by a certificate of conformity, you may start producing the new or modified vehicle anytime after you send us your amended application, before we make a decision under paragraph (d) of this section. However, if we determine that the affected vehicles do not meet applicable requirements, we will notify you to cease production of the vehicles and may require you to recall the vehicles at no expense to the owner. Choosing to produce vehicles under this paragraph (e) is deemed to be consent to recall all vehicles that we determine do not meet applicable emission standards or other requirements and to remedy the nonconformity at no expense to the owner. If you do not provide information required under paragraph (c) of this section within 30 days, you must stop producing the new or modified vehicles.
(f) You may ask to change your FEL in the following cases:

(1) You may ask to raise your FEL after the start of production. You may not apply the higher FEL to engines you have already introduced into commerce. Use the appropriate FELs with corresponding sales volumes to calculate your average emission level, as described in subpart H of this part. In your request, you must demonstrate that you will still be able to comply with the applicable average emission standards as specified in subparts B and H of this part.

(2) You may ask to lower the FEL for your engine family after the start of production only when you have test data from production vehicles indicating that your vehicles comply with the lower FEL. You may create a separate subfamily with the lower FEL. Otherwise, you must use the higher FEL for the family to calculate your average emission level under subpart H of this part.

(3) If you change the FEL during production, you must include the new FEL on the emission control information label for all vehicles produced after the change.

220. Section 1051.230 is revised to read as follows:

§1051.230 How do I select engine families?

(a) Divide your product line into families of vehicles that are expected to have similar emission characteristics throughout the useful life. Except as specified in paragraph (f) of this section, you must have separate engine families for meeting exhaust and evaporative emissions. Your engine families are limited to a single model year.

(b) For exhaust emissions, group vehicles in the same engine family if they are the same in all the following aspects:

(1) The combustion cycle.

(2) The cooling system (water-cooled vs. air-cooled).

(3) Configuration of the fuel system (for example, port fuel injection vs. carburetion).

(4) Method of air aspiration.

(5) The number, location, volume, and composition of catalytic converters.

(6) Type of fuel.

(7) The number, arrangement, and approximate bore diameter of cylinders.

(8) Numerical level of the emission standards that apply to the vehicle.

(c) For evaporative emissions, group vehicles in the same engine family if fuel tanks are the same and fuel lines are the same considering all the following aspects:

(1) Wall thickness.

(2) Type of material (including additives such as pigments, plasticizers, and UV inhibitors).

(3) Emission-control strategy.

(d) You may subdivide a group of vehicles that is identical under paragraph (b) or (c) of this section into different engine families if you show the expected emission characteristics are different during the useful life.

(e) You may group vehicles that are not identical with respect to the things listed in paragraph (b) or (c) of this section in the same engine family, as follows:

(1) You may group such vehicles in the same engine family if you show that their emission characteristics during the useful life will be similar.

(2) If you are a small-volume manufacturer, you may group engines from any vehicles subject to the same emission standards into a single engine family. This does not change any of the requirements of this part for showing that an engine family meets emission standards.

(f) You may divide your product line into engine families based on a combined consideration of exhaust and evaporative emission-control systems, consistent with the requirements of this section. This would allow you to use a single engine-family designation for each engine family instead of having separate engine-family designations for exhaust and evaporative emission-control systems for each model.

221. Section 1051.235 is revised to read as follows:

§1051.235 What emission testing must I perform for my application for a certificate of conformity?

This section describes the emission testing you must perform to show compliance with the emission standards in subpart B of this part.

(a) Test your emission-data vehicles using the procedures and equipment specified in subpart F of this part. Where specifically required or allowed, test the engine instead of the vehicle. For evaporative emissions, test the fuel system components separate from the vehicle.

(b) Select from each engine family an emission-data vehicle, and a fuel system for each fuel type with a configuration that is most likely to exceed the emission standards, using good engineering judgment. Consider the emission levels of all exhaust constituents over the full useful life of the vehicle.

(c) We may measure emissions from any of your test vehicles or engines (or any other vehicles or engines from the engine family), as follows:

(1) We may decide to do the testing at your plant or any other facility. If we do this, you must deliver the test vehicle or engine to a test facility we designate. The test vehicle or engine you provide must include appropriate manifolds, aftertreatment devices, electronic control units, and other emission-related components not normally attached directly to the engine block. If we do the testing at your plant, you must schedule it as soon as possible and make available the instruments, personnel, and equipment we need.

(2) If we measure emissions on one of your test vehicles or engines, the results of that testing become the official emission results. Unless we later invalidate these data, we may decide not to consider your data in determining if your engine family meets applicable requirements.

(3) Before we test one of your vehicles or engines, we may set its adjustable parameters to any point within the physically adjustable ranges (see §1051.115(c)).

(4) Before we test one of your vehicles or engines, we may calibrate it within normal production tolerances for anything we do not consider an adjustable parameter.

(d) You use previously generated emission data in the following cases:

(1) You may ask to use emission data from a previous model year instead of doing new tests, but only if all the following are true:

(i) The engine family from the previous model year differs from the current engine family only with respect to model year.

(ii) The emission-data vehicle from the previous model year remains the appropriate emission-data vehicle under paragraph (b) of this section.

(iii) The data show that the emission-data vehicle would meet all the requirements that apply to the engine family covered by the application for certification.

(2) You may submit emission data for equivalent engine families performed to show compliance with other standards (such as California standards) instead of doing new tests, but only if the data show that the test vehicle or engine would meet all of this part's requirements.

(3) You may submit evaporative emission data measured by a fuel system supplier. We may require you to verify that the testing was conducted in accordance with the applicable regulations.

(e) We may require you to test a second vehicle or engine of the same or different configuration in addition to the vehicle or engine tested under paragraph (b) of this section.

(f) If you use an alternate test procedure under 40 CFR 1065.10 and later testing shows that such testing does not produce results that are equivalent to the procedures specified in subpart F of this part, we may reject data you generated using the alternate procedure.

(g) If you are a small-volume manufacturer, you may certify by design on the basis of preexisting exhaust emission data for similar technologies and other relevant information, and in accordance with good engineering judgment. In those cases, you are not required to test your vehicles. This is called "design-certification" or "certifying by design." To certify by design, you must show that the technology used on your engines is sufficiently similar to the previously tested technology that a person reasonably familiar with emission-control technology would believe that your engines will comply with the emission standards.

(h) For fuel tanks that are certified based on permeability treatments for plastic fuel tanks, you do not need to test each engine family. However, you must use good engineering judgment to determine permeation rates for the tanks. This requires that more than one fuel tank be tested for each set of treatment conditions. You may not use test data

from a given tank for any other tanks that have thinner walls. You may, however, use test data from a given tank for other tanks that have thicker walls. This applies to both low-hour (i.e., baseline testing) and durability testing. Note that §1051.245 allows you to use design-based certification instead of generating new emission data.

222. Section 1051.240 is revised to read as follows:

§1051.240 How do I demonstrate that my engine family complies with exhaust emission standards?

(a) For purposes of certification, your engine family is considered in compliance with the applicable numerical exhaust emission standards in subpart B of this part if all emission-data vehicles representing that family have test results showing deteriorated emission levels at or below these standards. (Note: if you participate in the ABT program in subpart H of this part, your FELs are considered to be the applicable emission standards with which you must comply.)

(b) Your engine family is deemed not to comply if any emission-data vehicle representing that family has test results showing a deteriorated emission level above an applicable FEL or emission standard from subpart B of this part for any pollutant.

(c) To compare emission levels from the emission-data vehicle with the applicable emission standards, apply deterioration factors to the measured emission levels. Section 1051.243 specifies how to test your vehicle to develop deterioration factors that represent the deterioration expected in emissions over your vehicle's full useful life. Your deterioration factors must take into account any available data from in-use testing with similar engines. Small-volume manufacturers may use assigned deterioration factors that we establish. Apply deterioration factors as follows:

(1) For vehicles that use aftertreatment technology, such as catalytic converters, use a multiplicative deterioration factor for exhaust emissions. A multiplicative deterioration factor for a pollutant is the ratio of exhaust emissions at the end of the useful life and exhaust emissions at the low-hour test point. In these cases, adjust the official emission results for each tested vehicle or engine at the selected test point by multiplying the measured emissions by the deterioration factor. If the factor is less than one, use one. Multiplicative deterioration factors must be specified to three significant figures.

(2) For vehicles that do not use aftertreatment technology, use an additive deterioration factor for exhaust emissions. An additive deterioration factor for a pollutant is the difference between exhaust emissions at the end of the useful life and exhaust emissions at the low-hour test point. In these cases, adjust the official emission results for each tested vehicle or engine at the selected test point by adding the factor to the measured emissions. If the factor is less than zero, use zero. Additive deterioration factors must be specified to one more decimal place than the applicable standard.

(d) Collect emission data using measurements to one more decimal place than the applicable standard. Apply the deterioration factor to the official emission result, as described in paragraph (c) of this section, then round the adjusted figure to the same number of decimal places as the emission standard. Compare the rounded emission levels to the emission standard for each emission-data vehicle. In the case of HC+NOx standards, apply the deterioration factor to each pollutant and then add the results before rounding.

223. A new §1051.243 is added to read as follows:

§1051.243 How do I determine deterioration factors from exhaust durability testing?

Establish deterioration factors to determine whether your engines will meet emission standards for each pollutant throughout the useful life, as described in subpart B of this part and §1051.240. This section describes how to determine deterioration factors, either with pre-existing test data or with new emission measurements.

(a) You may ask us to approve deterioration factors for an engine family based on emission measurements from similar vehicles or engines if you have already given us these data for certifying other vehicles in the same or earlier model years. Use good engineering judgment to decide whether the two vehicles or engines are similar. We will approve your request if you show us that the emission measurements from other vehicles or engines reasonably represent in-use deterioration for the engine family for which you have not yet determined deterioration factors.

(b) If you are unable to determine deterioration factors for an engine family under paragraph (a) of this section, select vehicles, engines, subsystems, or components for testing. Determine deterioration factors based on service accumulation and related testing to represent the deterioration expected from in-use vehicles over the full useful life, as follows:

(1) You must measure emissions from the emission-data vehicle at a low-hour test point and the end of the useful life. You may also test at intermediate points.

(2) Operate the vehicle or engine over a representative duty cycle for a period at least as long as the useful life (in hours or kilometers). You may operate the vehicle or engine continuously.

(3) You may perform maintenance on emission-data vehicles as described in §1051.125 and 40 CFR part 1065, subpart E.

(4) Use a linear least-squares fit of your test data for each pollutant to calculate your deterioration factor.

(5) Use good engineering judgment for all aspects of the effort to establish deterioration factors under this paragraph (b).

(6) You may to use other testing methods to determine deterioration factors, consistent with good engineering judgment.

(c) Include the following information in your application for certification:

(1) If you use test data from a different engine family, explain why this is appropriate and include all the emission measurements on which you base the deterioration factor.

(2) If you do testing to determine deterioration factors, describe the form and extent of service accumulation, including a rationale for selecting the service-accumulation period and the method you use to accumulate hours.

224. Section 1051.245 is amended by revising paragraphs (a) introductory text, (b), (c), and (d) to read as follows:

§1051.245 How do I demonstrate that my engine family complies with evaporative emission standards?

(a) For purposes of certification, your engine family is considered in compliance with the evaporative emission standards in subpart B of this part if you do either of the following:

* * * * *

(b) Your engine family is deemed not to comply if any fuel tank or fuel line representing that family has test results showing a deteriorated emission level above the standard.

(c) To compare emission levels with the emission standards, apply deterioration factors to the measured emission levels. For permeation emissions, use the following procedures to establish an additive deterioration factor, as described in §1051.240(c)(2):

(1) Section 1051.515 specifies how to test your fuel tanks to develop deterioration factors. Small-volume manufacturers may use assigned deterioration factors that we establish. Apply the deterioration factors as follows:

(i) Calculate the deterioration factor from emission tests performed before and after the durability tests as described in §1051.515(c) and (d), using good engineering judgment. The durability tests described in §1051.515(d) represent the minimum requirements for determining a deterioration factor. You may not use a deterioration factor that is less than the difference between evaporative emissions before and after the durability tests as described in §1051.515(c) and (d).

(ii) Do not apply the deterioration factor to test results for tanks that have already undergone these durability tests.

(2) Determine the deterioration factor for fuel lines using good engineering judgment.

(d) Collect emission data using measurements to one more decimal place than the applicable standard. Apply the deterioration factor to the official emission result, as described in paragraph (c) of this section, then round the adjusted figure to the same number of decimal places as the emission standard. Compare the rounded emission levels to the emission standard for each emission-data vehicle.

* * * * *

225. Section 1051.250 is revised to read as follows:

§1051.250 What records must I keep and make available to EPA?

(a) Organize and maintain the following records:

(1) A copy of all applications and any summary information you send us.

(2) Any of the information we specify in §1051.205 that you were not required to include in your application.

(3) A detailed history of each emission-data vehicle. For each vehicle, describe all of the following:

(i) The emission-data vehicle's construction, including its origin and buildup, steps you took to ensure that it represents production vehicles, any components you built specially for it, and all the components you include in your application for certification.

(ii) How you accumulated vehicle or engine operating hours, including the dates and the number of hours accumulated.

(iii) All maintenance, including modifications, parts changes, and other service, and the dates and reasons for the maintenance.

(iv) All your emission tests, including documentation on routine and standard tests, as specified in 40 CFR part 1065, and the date and purpose of each test.

(v) All tests to diagnose engine or emission-control performance, giving the date and time of each and the reasons for the test.

(vi) Any other significant events.

(4) Production figures for each engine family divided by assembly plant.

(5) Keep a list of engine identification numbers for all the engines you produce under each certificate of conformity.

(b) Keep data from routine emission tests (such as test cell temperatures and relative humidity readings) for one year after we issue the associated certificate of conformity. Keep all other information specified in paragraph (a) of this section for eight years after we issue your certificate.

(c) Store these records in any format and on any media, as long as you can promptly send us organized, written records in English if we ask for them. You must keep these records readily available. We may review them at any time.

(d) Send us copies of any maintenance instructions or explanations if we ask for them.

226. Section 1051.255 is revised to read as follows:

§1051.255 What decisions may EPA make regarding my certificate of conformity?

(a) If we determine your application is complete and shows that the engine family meets all the requirements of this part and the Act, we will issue a certificate of conformity for your engine family for that model year. We may make the approval subject to additional conditions.

(b) We may deny your application for certification if we determine that your engine family fails to comply with emission standards or other requirements of this part or the Act. Our decision may be based on a review of all information available to us. If we deny your application, we will explain why in writing.

(c) In addition, we may deny your application or suspend or revoke your certificate if you do any of the following:

(1) Refuse to comply with any testing or reporting requirements.

(2) Submit false or incomplete information (paragraph (e) of this section applies if this is fraudulent).

(3) Render inaccurate any test data.

(4) Deny us from completing authorized activities despite our presenting a warrant or court order (see 40 CFR 1068.20). This includes a failure to provide reasonable assistance.

(5) Produce engines for importation into the United States at a location where local law prohibits us from carrying out authorized activities.

(6) Fail to supply requested information or amend your application to include all engines being produced.

(7) Take any action that otherwise circumvents the intent of the Act or this part.

(d) We may void your certificate if you do not keep the records we require or do not give us information when we ask for it.

(e) We may void your certificate if we find that you intentionally submitted false or incomplete information.
(f) If we deny your application or suspend, revoke, or void your certificate, you may ask for a hearing (see §1051.820).

227. The heading for subpart D is revised to read as follows:
Subpart D—Testing Production-line Vehicles and Engines

228. Section 1051.301 is amended by revising paragraph (a) and adding paragraph (h) to read as follows:
§1051.301 When must I test my production-line vehicles or engines?
(a) If you produce vehicles that are subject to the requirements of this part, you must test them as described in this subpart. If your vehicle is certified to g/kW-hr standards, then test the engine; otherwise, test the vehicle. The provisions of this subpart do not apply to small-volume manufacturers.
* * * * *
(h) Vehicles certified to the following standards are exempt from the production-line testing requirements of this subpart if they are certified without participating in the averaging, banking, and trading program described in subpart H of this part:
(1) Phase 1 or Phase 2 standards in §1051.103.
(2) Phase 1 standards in §§1051.105.
(3) Phase 1 standards in §1051.107.
(4) The standards in §1051.615.
(5) The standards in §1051.145(b).

229. Section 1051.305 is amended by revising paragraphs (d)(1), (e), (f), and (g) to read as follows:
§1051.305 How must I prepare and test my production-line vehicles or engines?
* * * * *
(d) * * *
(1) We may adjust or require you to adjust idle speed outside the physically adjustable range as needed only until the vehicle or engine has stabilized emission levels (see paragraph (e) of this section). We may ask you for information needed to establish an alternate minimum idle speed.
* * * * *
(e) Stabilizing emission levels. Before you test production-line vehicles or engines, you may operate the vehicle or engine to stabilize the emission levels. Using good engineering judgment, operate your vehicles or engines in a way that represents the way they will be used. You may operate each vehicle or engine for no more than the greater of two periods:
(1) 50 hours or 500 kilometers.
(2) The number of hours or kilometers you operated the emission-data vehicle used for certifying the engine family (see 40 CFR part 1065, subpart E, or the applicable regulations governing how you should prepare your test vehicle or engine).
(f) Damage during shipment. If shipping a vehicle or engine to a remote facility for production-line testing makes necessary an adjustment or repair, you must wait until after the initial emission test to do this work. We may waive this requirement if the test would be impossible or unsafe, or if it would permanently damage the vehicle or engine. Report to us, in your written report under §1051.345, all adjustments or repairs you make on test vehicles or engines before each test.
(g) Retesting after invalid tests. You may retest a vehicle or engine if you determine an emission test is invalid under subpart F of this part. Explain in your written report reasons for invalidating any test and the emission results from all tests. If you retest a vehicle or engine, you may ask us to substitute results of the new tests for the original

ones. You must ask us within ten days of testing. We will generally answer within ten days after we receive your information.

230. Section 1051.310 is amended by revising paragraphs (c) introductory text, (c)(2), (f), (g), and (i) to read as follows:

§1051.310 How must I select vehicles or engines for production-line testing?

* * * * *

(c) Calculate the required sample size for each engine family. Separately calculate this figure for HC, NOx (or HC+NOx), and CO (and other regulated pollutants). The required sample size is the greater of these calculated values. Use the following equation:

$$N = \left[\frac{(t_{95} \times \sigma)}{(x - STD)}\right]^2 + 1$$

Where:

N = Required sample size for the model year.

t_{95} = 95% confidence coefficient, which depends on the number of tests completed, n, as specified in the table in paragraph (c)(1) of this section. It defines 95% confidence intervals for a one-tail distribution.

x = Mean of emission test results of the sample.

STD = Emission standard (or family emission limit, if applicable).

σ = Test sample standard deviation (see paragraph (c)(2) of this section).

n = The number of tests completed in an engine family.

* * *

(2) Calculate the standard deviation, σ, for the test sample using the following formula:

$$\sigma = \sqrt{\frac{\sum (X_i - x)^2}{n - 1}}$$

Where:

X_i = Emission test result for an individual vehicle or engine.

* * * * *

(f) Distribute the remaining vehicle or engine tests evenly throughout the rest of the year. You may need to adjust your schedule for selecting vehicles or engines if the required sample size changes. Continue to randomly select vehicles or engines from each engine family.

(g) Continue testing any engine family for which the sample mean, x, is greater than the emission standard. This applies if the sample mean for either HC, NOx (or HC+NOx), or CO (or other regulated pollutants) is greater than the emission standard. Continue testing until one of the following things happens:

(1) The number of tests completed in an engine family, n, is greater than the required sample size, N, and the sample mean, x, is less than or equal to the emission standard. For example, if N = 3.1 after the third test, the sample-size calculation does not allow you to stop testing.

(2) The engine family does not comply according to §1051.315.

(3) You test 30 vehicles or engines from the engine family.

(4) You test five engines and one percent of your projected annual U.S.-directed production volume for the engine family.

(5) You choose to declare that the engine family fails the requirements of this subpart.

* * * * *

(i) You may elect to test more randomly chosen vehicles or engines than we require under this section. Include these vehicles or engines in the sample-size calculations.

231. Section 1051.325 is amended by revising paragraph (d) to read as follows:

§1051.325 What happens if an engine family fails the production-line requirements?

* * * * *

(d) Section 1051.335 specifies steps you must take to remedy the cause of the engine family's production-line failure. All the vehicles you have produced since the end of the last test period are presumed noncompliant and should be addressed in your proposed remedy. We may require you to apply the remedy to engines produced earlier if we determine that the cause of the failure is likely to have affected the earlier engines.

* * * * *

232. Section 1051.345 is amended by revising paragraphs (a) introductory text, (a)(5), and (a)(10) to read as follows:

§1051.345 What production-line testing records must I send to EPA?

* * * * *

(a) Within 30 calendar days of the end of each test period, send us a report with the following information:

* * *

(5) Identify how you accumulated hours of operation on the vehicles or engines and describe the procedure and schedule you used.

* * * * *

(10) State the date the test period ended for each engine family.

* * * * *

233. Section 1051.350 is amended by revising paragraph (a) introductory text to read as follows:

§1051.350 What records must I keep?

(a) Organize and maintain your records as described in this section. We may review your records at any time.

* * * * *

234. Section 1051.501 is amended by revising the introductory text and paragraphs (a) and (b) and adding paragraph (e)(3) to read as follows:

§1051.501 What procedures must I use to test my vehicles or engines?

This section describes test procedures that you used to determine whether vehicles meet the emission standards of this part. See §1051.235 to determine when testing is required for certification. See subpart D of this part for the production-line testing requirements.

(a) Snowmobiles. For snowmobiles, use the equipment and procedures for spark-ignition engines in part 1065 of this chapter to determine whether your snowmobiles meet the duty-cycle emission standards in §1051.103. Measure the emissions of all the pollutants we regulate in §1051.103 using the dilute sampling procedures in 40 CFR part 1065. For steady-state testing, you may use raw-gas sampling methods (such as those described in 40 CFR part 91), as long as they have been shown to produce measurements equivalent to the dilute sampling methods specified in 40 CFR part 1065. Use the duty cycle specified in §1051.505.

(b) Motorcycles and ATVs. For motorcycles and ATVs, use the equipment, procedures, and duty cycle in 40 CFR part 86, subpart F, to determine whether your vehicles meet the exhaust emission standards in §1051.105 or §1051.107. Measure the emissions of all the pollutants we regulate in §1051.105 or §1051.107. If we allow you to certify ATVs based on engine testing, use the equipment, procedures, and duty cycle described or referenced in the section that allows engine testing. For motorcycles with engine displacement at or below 169 cc and all ATVs, use

the driving schedule in paragraph (c) of Appendix I to 40 CFR part 86. For all other motorcycles, use the driving schedule in paragraph (b) of Appendix I to part 86. With respect to vehicle-speed governors, test motorcycles and ATVs in their ungoverned configuration, unless we approve in advance testing in a governed configuration. We will only approve testing in a governed configuration if you can show that the governor is permanently installed on all production vehicles and is unlikely to be removed in use. With respect to engine-speed governors, test motorcycles and ATVs in their governed configuration.

* * * * *

(e) * * *

(3) You may test engines using a test speed based on the point of maximum power if that represents in-use operation better than testing based on maximum test speed.

* * * * *

235. Section 1051.505 is amended by revising paragraph (a) before the table and paragraphs (b)(3), (e), and (f) to read as follows:

§1051.505 What special provisions apply for testing snowmobiles?

(a) Measure emissions by testing the engine on a dynamometer with the following duty cycle to determine whether it meets the emission standards in §1051.103:

* * * * *

(b) * * *

(3) Keep engine torque under 5 percent of maximum test torque.

* * * * *

(e) See 40 CFR part 1065 for detailed specifications of tolerances and calculations.

(f) You may test snowmobiles at ambient temperatures below 20 °C or using intake air temperatures below 20 °C if you show that such testing complies with 40 CFR 1065.10(c)(1). You must get our approval before you begin the emission testing. For example, the following approach would be appropriate to show that such testing complies with 40 CFR 1065.10(c)(1):

* * * * *

236. Section 1051.515 is amended by revising paragraphs (a)(5) and (b) to read as follows:

§1051.515 How do I test my fuel tank for permeation emissions?

* * * * *

(a) * * *

(5) Seal the fuel tank using fuel caps and other fittings (excluding petcocks) that would be used to seal openings in a production fuel tank. In cases where openings are not normally sealed on the fuel tank (such as hose-connection fittings and vents in fuel caps), these openings may be sealed using nonpermeable fittings such as metal or fluoropolymer plugs.

(b) Permeation test run. To run the test, take the following steps for a tank that was preconditioned as specified in paragraph (a) of this section:

(1) Weigh the sealed fuel tank and record the weight to the nearest 0.1 grams. You may use less precise weights as long as the difference in mass from the start of the test to the end of the test has at least three significant figures. Take this measurement within 8 hours of filling the tank with test fuel as specified in paragraph (a)(3) of this section.

(2) Carefully place the tank within a ventilated, temperature-controlled room or enclosure. Do not spill or add any fuel.

(3) Close the room or enclosure and record the time.

(4) Ensure that the measured temperature in the room or enclosure is 28 ±2 °C.

(5) Leave the tank in the room or enclosure for 14 days.

(6) Hold the temperature of the room or enclosure to 28 ±2 °C; measure and record the temperature at least daily.

(7) At the end of the soak period, weigh the sealed fuel tank and record the weight to the nearest 0.1 grams. You may use less precise weights as long as the difference in mass from the start of the test to the end of the test has at least three significant figures. Unless the same fuel is used in the preconditioning fuel soak and the permeation test run, record weight measurements on five separate days per week of testing. The test is void if a linear plot of tank weight vs. test days for the full soak period for permeation testing specified in paragraph (b)(5) of this section yields an R-squared value below 0.8.

(8) Subtract the weight of the tank at the end of the test from the weight of the tank at the beginning of the test; divide the difference by the internal surface area of the fuel tank. Divide this g/m^2 value by the number of test days (using at least three significant figures) to calculate the g/m^2/day emission rate. Example: If a tank with an internal surface area of 0.72 m^2 weighed 31882.3 grams at the beginning of the test and weighed 31760.2 grams after soaking for 14.03 days, then the g/m^2/day emission rate would be–

$$(31882.3 \text{ g} - 31813.8 \text{ g}) / 0.72 \text{ m}^2 / 14.03 \text{ days} = 6.78 \text{ g/m}^2\text{/day}.$$

(9) Round your result to the same number of decimal places as the emission standard.

(10) In cases where consideration of permeation rates, using good engineering judgment, leads you to conclude that soaking for 14 days is not long enough to measure weight change to at least three significant figures, you may soak for 14 days longer. In this case, repeat steps (b)(8) and (9) of this section to determine the weight change for the full 28 days.

* * * * *

237. Section 1051.520 is revised to read as follows:

§1051.520 How do I perform exhaust durability testing?

Sections 1051.240 and 1051.243 describe the method for testing that must be performed to establish deterioration factors for an engine family.

238. Section 1051.605 is revised to read as follows:

§1051.605 What provisions apply to engines already certified under the motor-vehicle program or the Large Spark-ignition program?

(a) General provisions. If you are an engine manufacturer, this section allows you to introduce into commerce new recreational vehicles, and engines for recreational vehicles, if the engines are already certified to the requirements that apply to spark-ignition engines under 40 CFR parts 85 and 86 or 40 CFR part 1048 for the appropriate model year. If you comply with all the provisions of this section, we consider the certificate issued under 40 CFR part 86 or 1048 for each engine to also be a valid certificate of conformity under this part 1051 for its model year, without a separate application for certification under the requirements of this part 1051. See §1051.610 for similar provisions that apply to vehicles that are already certified to the vehicle-based standards for motor vehicles.

(b) Vehicle-manufacturer provisions. If you are not an engine manufacturer, you may install an engine certified for the appropriate model year under 40 CFR part 86 or 1048 in a recreational vehicle as long as the engine has been properly labeled as specified in paragraphs (d)(4) through (6) of this section and you do not make any of the changes described in paragraph (d)(2) of this section. If you modify the non-recreational engine in any of the ways described in paragraph (d)(2) of this section for installation in a recreational vehicle, we will consider you a manufacturer of recreational vehicles. Such engine modifications prevent you from using the provisions of this section.

(c) Liability. Engines for which you meet the requirements of this section are exempt from all the requirements and prohibitions of this part, except for those specified in this section. Engines exempted under this section must meet all the applicable requirements from 40 CFR parts 85 and 86 or 40 CFR part 1048. This paragraph (c) applies to engine manufacturers, vehicle manufacturers who use such an engine, and all other persons as if the engine were used in its originally intended application. The prohibited acts of §1068.101(a)(1) apply to these new engines and vehicles; however, we consider the certificate issued under 40 CFR part 86 or 1048 for each engine to also be a valid

certificate of conformity under this part 1051 for its model year. If we make a determination that these engines do not conform to the regulations during their useful life, we may require you to recall them under this part 1051 or under 40 CFR part 85 or 1068.505.

(d) Specific requirements. If you are an engine manufacturer and meet all the following criteria and requirements regarding your new engine, the vehicle using the engine is eligible for an exemption under this section:

(1) Your engine must be covered by a valid certificate of conformity issued under 40 CFR part 86 or 1048.

(2) You must not make any changes to the certified engine that could reasonably be expected to increase its exhaust emissions for any pollutant, or its evaporative emissions. For example, if you make any of the following changes to one of these engines, you do not qualify for this exemption:

(i) Change any fuel system or evaporative system parameters from the certified configuration (this does not apply to refueling controls).

(ii) Change, remove, or fail to properly install any other component, element of design, or calibration specified in the engine manufacturer's application for certification. This includes aftertreatment devices and all related components.

(iii) Modify or design the engine cooling system so that temperatures or heat rejection rates are outside the original engine manufacturer's specified ranges.

(3) You must show that fewer than 50 percent of the engine model's total sales for the model year, from all companies, are used in recreational vehicles, as follows:

(i) If you are the original manufacturer of the engine, base this showing on your sales information.

(ii) In all other cases, you must get the original manufacturer of the engine to confirm this based on its sales information.

(4) You must ensure that the engine has the emission control information label we require under 40 CFR part 86 or 1048.

(5) You must add a permanent supplemental label to the engine in a position where it will remain clearly visible after installation in the vehicle. In the supplemental label, do the following:

(i) Include the heading: "RECREATIONAL VEHICLE EMISSION CONTROL INFORMATION".

(ii) Include your full corporate name and trademark. You may instead include the full corporate name and trademark of another company you choose to designate.

(iii) State: "THIS ENGINE WAS ADAPTED FOR A RECREATIONAL USE WITHOUT AFFECTING ITS EMISSION CONTROLS.".

(iv) State the date you finished installation (month and year), if applicable.

(6) The original and supplemental labels must be readily visible after the engine is installed in the vehicle or, if the vehicle obscures the engine's emission control information label, the make sure the vehicle manufacturer attaches duplicate labels, as described in 40 CFR 1068.105.

(7) Send the Designated Compliance Officer a signed letter by the end of each calendar year (or less often if we tell you) with all the following information:

(i) Identify your full corporate name, address, and telephone number.

(ii) List the engine models you expect to produce under this exemption in the coming year.

(iii) State: "We produce each listed engine model for recreational application without making any changes that could increase its certified emission levels, as described in 40 CFR 1051.605.".

(e) Failure to comply. If your engines do not meet the criteria listed in paragraph (d) of this section, they will be subject to the standards, requirements, and prohibitions of this part 1051 and the certificate issued under 40 CFR part 86 or 1048 will not be deemed to also be a certificate issued under this part 1051. Introducing these engines into commerce without a valid exemption or certificate of conformity under this part violates the prohibitions in 40 CFR 1068.101(a)(1).

(f) Data submission. We may require you to send us emission test data on any applicable nonroad duty cycles.

(g) Participation in averaging, banking and trading. Engines adapted for recreational use under this section may not generate or use emission credits under this part 1051. These engines may generate credits under the ABT provisions in 40 CFR part 86. These engines must use emission credits under 40 CFR part 86 if they are certified to an FEL that exceeds an applicable standard.

239. Section 1051.610 is revised to read as follows:

§1051.610 What provisions apply to vehicles already certified under the motor-vehicle program?

(a) General provisions. If you are a motor-vehicle manufacturer, this section allows you to introduce new recreational vehicles into commerce if the vehicle is already certified to the requirements that apply under 40 CFR parts 85 and 86. If you comply with all of the provisions of this section, we consider the certificate issued under 40 CFR part 86 for each motor vehicle to also be a valid certificate of conformity for the engine under this part 1051 for its model year, without a separate application for certification under the requirements of this part 1051. This section applies especially for highway motorcycles that are modified for recreational nonroad use. See §1051.605 for similar provisions that apply to motor-vehicle engines or Large SI engines produced for recreational vehicles.

(b) Nonroad vehicle-manufacturer provisions. If you are not a motor-vehicle manufacturer, you may produce recreational vehicles from motor vehicles under this section as long as the recreational vehicle has the labels specified in paragraph (d)(4) through (6) of this section and you do not make any of the changes described in paragraph (d)(2) of this section. If you modify the motor vehicle or its engine in any of the ways described in paragraph (d)(2) of this section, we will consider you a manufacturer of a new recreational vehicle. Such modifications prevent you from using the provisions of this section.

(c) Liability. Engines and vehicles for which you meet the requirements of this section are exempt from all the requirements and prohibitions of this part, except for those specified in this section. Engines exempted under this section must meet all the applicable requirements from 40 CFR parts 85 and 86. This applies to engine manufacturers, vehicle manufacturers, and all other persons as if the recreational vehicles were motor vehicles. The prohibited acts of §1068.101(a)(1) apply to these new recreational vehicles; however, we consider the certificate issued under 40 CFR part 86 for each motor vehicle to also be a valid certificate of conformity for the recreational vehicle under this part 1051 for its model year. If we make a determination that these engines or vehicles do not conform to the regulations during their useful life, we may require you to recall them under 40 CFR part 86 or 40 CFR 1068.505.

(d) Specific requirements. If you are a motor-vehicle manufacturer and meet all the following criteria and requirements regarding your new recreational vehicle and its engine, the vehicle is eligible for an exemption under this section:

(1) Your vehicle must be covered by a valid certificate of conformity as a motor vehicle issued under 40 CFR part 86.

(2) You must not make any changes to the certified vehicle that we could reasonably expect to increase its exhaust emissions for any pollutant, or its evaporative emissions if it is subject to evaporative-emission standards. For example, if you make any of the following changes, you do not qualify for this exemption:

(i) Change any fuel system parameters from the certified configuration.

(ii) Change, remove, or fail to properly install any other component, element of design, or calibration specified in the vehicle manufacturer's application for certification. This includes aftertreatment devices and all related components.

(iii) Modify or design the engine cooling system so that temperatures or heat rejection rates are outside the original vehicle manufacturer's specified ranges.

(iv) Add more than 500 pounds to the curb weight of the originally certified motor vehicle.

(3) You must show that fewer than 50 percent of the total sales as a motor vehicle or a recreational vehicle, from all companies, are used in recreational vehicles, as follows:

(i) If you are the original manufacturer of the vehicle, base this showing on your sales information.

(ii) In all other cases, you must get the original manufacturer of the vehicle to confirm this based on their sales information.

(4) The vehicle must have the vehicle emission control information we require under 40 CFR part 86.

(5) You must add a permanent supplemental label to the vehicle in a position where it will remain clearly visible. In the supplemental label, do the following:

(i) Include the heading: "RECREATIONAL VEHICLE ENGINE EMISSION CONTROL INFORMATION".

(ii) Include your full corporate name and trademark. You may instead include the full corporate name and trademark of another company you choose to designate.

(iii) State: “THIS VEHICLE WAS ADAPTED FOR RECREATIONAL USE WITHOUT AFFECTING ITS EMISSION CONTROLS.”.

(iv) State the date you finished modifying the vehicle (month and year), if applicable.

(6) The original and supplemental labels must be readily visible in the fully assembled vehicle.

(7) Send the Designated Compliance Officer a signed letter by the end of each calendar year (or less often if we tell you) with all the following information:

(i) Identify your full corporate name, address, and telephone number.

(ii) List the vehicle models you expect to produce under this exemption in the coming year.

(iii) State: "We produced each listed engine or vehicle model for recreational application without making any changes that could increase its certified emission levels, as described in 40 CFR 1051.610.".

(e) Failure to comply. If your engines or vehicles do not meet the criteria listed in paragraph (d) of this section, the engines will be subject to the standards, requirements, and prohibitions of this part 1051, and the certificate issued under 40 CFR part 86 will not be deemed to also be a certificate issued under this part 1051. Introducing these engines into commerce without a valid exemption or certificate of conformity under this part violates the prohibitions in 40 CFR 1068.101(a)(1).

(f) Data submission. We may require you to send us emission test data on any applicable nonroad duty cycles.

(g) Participation in averaging, banking and trading. Vehicles adapted for recreational use under this section may not generate or use emission credits under this part 1051. These engines may generate credits under the ABT provisions in 40 CFR part 86. These engines must use emission credits under 40 CFR part 86 if they are certified to an FEL that exceeds an applicable standard.

240. Section 1051.615 is amended by revising paragraphs (a) introductory text and (b) introductory text, moving paragraph (e) to paragraph (f), and adding a new paragraph (e) to read as follows:

§1051.615 What are the special provisions for certifying small recreational engines?

(a) You may certify ATVs with engines that have total displacement of less than 100 cc to the following exhaust emission standards instead of certifying them to the exhaust emission standards of subpart B of this part:

* * * * *

(b) You may certify off-highway motorcycles with engines that have total displacement of 70 cc or less to the following exhaust emission standards instead of certifying them to the exhaust emission standards of subpart B of this part:

* * * * *

(e) For ATVs certified to the standards in this section, use the following equation to determine the normalized emission rate required by §1051.135(g):

$$NER = 0.250 \times \log(HC + NOx) + 0.250$$

Where:

HC +NOx is the sum of the cycle-weighted emission rates for hydrocarbons and oxides of nitrogen in g/kW-hr.

* * * * *

241. Section 1051.620 is amended by revising paragraph (b)(1)(vi) to read as follows:

§1051.620 When may a manufacturer obtain an exemption for competition recreational vehicles?

* * * * *

(b) * * *

(1) * * *

(vi) The absence of a functional seat. (For example, a seat with less than 30 square inches of seating surface would generally not be considered a functional seat).

* * * * *

242. A new §1051.645 is added to read as follows:

§1051.645 What special provisions apply to branded engines?

The following provisions apply if you identify the name and trademark of another company instead of your own on your emission control information label, as provided by §1051.135(c)(2):

(a) You must have a contractual agreement with the other company that obligates that company to take the following steps:

(1) Meet the emission warranty requirements that apply under §1051.120. This may involve a separate agreement involving reimbursement of warranty-related expenses.

(2) Report all warranty-related information to the certificate holder.

(b) In your application for certification, identify the company whose trademark you will use and describe the arrangements you have made to meet your requirements under this section.

(c) You remain responsible for meeting all the requirements of this chapter, including warranty and defect-reporting provisions.

243. Section 1051.701 is amended by revising paragraphs (a), (c), and (d) and adding paragraphs (e), (f), and (g) to read as follows:

§1051.701 General provisions.

(a) You may average, bank, and trade emission credits for purposes of certification as described in this subpart to show compliance with the standards of this part. To do this you must certify your engines to Family Emission Limits (FELs) and show that your average emission levels are below the applicable standards in subpart B of this part, or that you have sufficient credits to offset a credit deficit for the model year (as calculated in §1051.720).

* * * * *

(c) The definitions of Subpart I of this part apply to this subpart. The following definitions also apply:

(1) Actual emission credits means emission credits you have generated that we have verified by reviewing your final report.

(2) Average standard means a standard that allows you comply by averaging all your vehicles under this part. See subpart B of this part to determine which standards are average standards.

(3) Averaging set means a set of engines in which emission credits may be exchanged only with other engines in the same averaging set.

(4) Broker means any entity that facilitates a trade of emission credits between a buyer and seller.

(5) Buyer means the entity that receives emission credits as a result of a trade.

(6) Reserved emission credits means emission credits you have generated that we have not yet verified by reviewing your final report.

(7) Seller means the entity that provides emission credits during a trade.

(8) Trade means to exchange emission credits, either as a buyer or seller.

(d) In your application for certification, base your showing of compliance on projected production volumes for vehicles whose point of first retail sale is in the United States. As described in §1051.730, compliance with the requirements of this subpart is determined at the end of the model year based on actual production volumes for vehicles whose point of first retail sale is in the United States. Do not include any of the following vehicles to calculate emission credits:

(1) Vehicles exempted under subpart G of this part or under 40 CFR part 1068.

(2) Exported vehicles.

(3) Vehicles not subject to the requirements of this part, such as those excluded under §1051.5.

(4) Vehicles for which the location of first retail sale is in a state that has applicable emission regulations for that model year. For example, you may not include vehicles sold in California if it has emission standards for these

engines, and you may not include vehicles sold in other states that adopt California's emission standards under Clean Air Act section 177.

(5) Any other vehicles, where we indicate elsewhere in this part 1051 that they are not to be included in the calculations of this subpart.

(e) You may not use emission credits generated under this subpart to offset any emissions that exceed an FEL or standard. This applies for all testing, including certification testing, in-use testing, selective enforcement audits, and other production-line testing. However, if emissions from an engine exceed an FEL or standard (for example, during a selective enforcement audit), you may use emission credits to recertify the engine family with a higher FEL that applies only to future production.

(f) Emission credits may be used in the model year they are generated or in future model years. Emission credits may not be used for past model years.

(g) You may increase or decrease an FEL during the model year by amending your application for certification under §1051.225. The new FEL may apply only to engines you have not already introduced into commerce.

244. Section 1051.705 is amended by revising paragraphs (a) and (b) and adding paragraph (e) to read as follows:

§1051.705 How do I average emission levels?

(a) As specified in subpart B of this part, certify each vehicle to an FEL, subject to the FEL caps in subpart B of this part.

(b) Calculate a preliminary average emission level according to §1051.720 for each averaging set using projected U.S.-directed production volumes from your application for certification.

* * * * *

(e) If your average emission level is above the allowable average standard, you must obtain enough emission credits to offset the deficit by the due date for the final report required in §1051.730. The emission credits used to address the deficit may come from emission credits you have banked or from emission credits you obtain through trading.

245. Section 1051.710 is revised to read as follows:

§1051.710 How do I generate and bank emission credits?

(a) Banking is the retention of emission credits by the manufacturer generating the emission credits for use in averaging or trading in future model years. You may use banked emission credits only within the averaging set in which they were generated.

(b) If your average emission level is below the average standard, you may calculate credits according to §1051.720. Credits you generate do not expire.

(c) You may generate credits if you are a certifying manufacturer.

(d) In your application for certification, designate any emission credits you intend to bank. These emission credits will be considered reserved credits. During the model year and before the due date for the final report, you may redesignate these emission credits for averaging or trading.

(e) You may use banked emission credits from the previous model year for averaging or trading before we verify them, but we may revoke these emission credits if we are unable to verify them after reviewing your reports or auditing your records.

(f) Reserved credits become actual emission credits only when we verify them in reviewing your final report.

246. Section 1051.715 is revised to read as follows:

§1051.715 How do I trade emission credits?

(a) Trading is the exchange of emission credits between manufacturers. You may use traded emission credits for averaging, banking, or further trading transactions. Traded emission credits may be used only within the averaging set in which they were generated.

(b) You may trade banked credits to any certifying manufacturer.

(c) You may trade actual emission credits as described in this subpart. You may also trade reserved emission credits, but we may revoke these emission credits based on our review of your records or reports or those of the company with which you traded emission credits.
(d) If a negative emission credit balance results from a transaction, both the buyer and seller are liable, except in cases we deem to involve fraud. See §1051.255(e) for cases involving fraud. We may void the certificates of all engine families participating in a trade that results in a manufacturer having a negative balance of emission credits. See §1051.745.

247. Section 1051.720 is amended by revising paragraphs (a)(2) and (a)(3) to read as follows:

§1051.720 How do I calculate my average emission level or emission credits?

(a) * * *

(2) For vehicles that have standards expressed as g/kW-hr and a useful life in kilometers, convert the useful life to kW-hr based on the maximum power output observed over the emission test and an assumed vehicle speed of 30 km/hr as follows: UL (kW-hr) = UL (km) × Maximum Test Power (kW) ÷ 30 km/hr. (Note: It is not necessary to include a load factor, since credit exchange is not allowed between vehicles certified to g/kW-hr standards and vehicles certified to g/km standards.)

(3) For evaporative emission standards expressed as $g/m^2/day$, use the useful life value in years multiplied by 365.24 and calculate the average emission level as:

$$\text{Emission level} = \left[\sum_i (\text{FEL})_i \times (\text{UL})_i \times (\text{Production})_i\right] \Big/ \left[\sum_i (\text{Production})_i \times (\text{UL})_i\right]$$

Where:

Production $_i$ = The number of vehicles in the engine family times the average internal surface area of the vehicles' fuel tanks.

* * * * *

248. Section 1051.725 is revised to read as follows:

§1051.725 What must I include in my applications for certification?

(a) You must declare in your applications for certification your intent to use the provisions of this subpart. You must also declare the FELs you select for each engine family. Your FELs must comply with the specifications of subpart B of this part, including the FEL caps. FELs must be expressed to the same number of decimal places as the applicable standards.

(b) Include the following in your application for certification:

(1) A statement that, to the best of your belief, you will not have a negative balance of emission credits for any averaging set when all emission credits are calculated at the end of the year. This means that if you believe that your average emission level will be above the standard (i.e., that you will have a deficit for the model year), you must have banked credits (or project to have received traded credits) to offset the deficit.

(2) Detailed calculations of projected emission credits (positive or negative) based on projected production volumes. If you will generate positive emission credits, state specifically where the emission credits will be applied (for example, whether they will be traded or reserved for banking). If you have projected negative emission credits, state the source of positive emission credits to offset the negative emission credits. Describe whether the emission credits are actual or reserved and whether they will come from banking, trading, or a combination of these. If you intend to rely on trading, identify from which manufacturer the emission credits will come.

249. Section 1051.730 is revised to read as follows:

§1051.730 What ABT reports must I send to EPA?

(a) If any of your engine families are certified using the ABT provisions of this subpart, you must send an end-of-year report within 90 days after the end of the model year and a final report within 270 days after the end of the model year. We may waive the requirement to send the end-of year report, as long as you send the final report on time.

(b) Your end-of-year and final reports must include the following information for each engine family:

(1) Engine-family designation.

(2) The emission standards that would otherwise apply to the engine family.

(3) The FEL for each pollutant. If you changed an FEL during the model year, identify each FEL you used and calculate the positive or negative emission credits under each FEL. Also, describe how the applicable FEL can be identified for each vehicle you produced. For example, you might keep a list of vehicle identification numbers that correspond with certain FEL values.

(4) The projected and actual production volumes for the model year with a point of retail sale in the United States. If you changed an FEL during the model year, identify the actual production volume associated with each FEL.

(5) For vehicles that have standards expressed as g/kW-hr, maximum engine power for each vehicle configuration, and the sales-weighted average engine power for the engine family.

(6) Useful life.

(7) Calculated positive or negative emission credits. Identify any emission credits that you traded, as described in paragraph (d)(1) of this section.

(c) Your end-of-year and final reports must include the following additional information:

(1) Show that your net balance of emission credits in each averaging set in the applicable model year is not negative.

(2) State whether you will reserve any emission credits for banking.

(3) State that the report's contents are accurate.

(d) If you trade emission credits, you must send us a report within 90 days after the transaction, as follows:

(1) As the seller, you must include the following information in your report:

(i) The corporate names of the buyer and any brokers.

(ii) A copy of any contracts related to the trade.

(iii) The engine families that generated emission credits for the trade, including the number of emission credits from each family.

(2) As the buyer, you must include the following information in your report:

(i) The corporate names of the seller and any brokers.

(ii) A copy of any contracts related to the trade.

(iii) How you intend to use the emission credits, including the number of emission credits you intend to apply to each engine family (if known).

(e) Send your reports electronically to the Designated Compliance Officer using an approved information format. If you want to use a different format, send us a written request with justification for a waiver.

(f) Correct errors in your end-of-year report or final report as follows:

(1) You may correct any errors in your end-of-year report when you prepare the final report, as long as you send us the final report by the time it is due.

(2) If you or we determine within 270 days after the end of the model year that errors mistakenly decrease your balance of emission credits, you may correct the errors and recalculate the balance of emission credits. You may not make these corrections for errors that are determined more than 270 days after the end of the model year. If you report a negative balance of emission credits, we may disallow corrections under this paragraph (f)(2).

(3) If you or we determine anytime that errors mistakenly increase your balance of emission credits, you must correct the errors and recalculate the balance of emission credits.

250. Section 1051.735 is revised to read as follows:

§1051.735 What records must I keep?

(a) You must organize and maintain your records as described in this section. We may review your records at any time.

(b) Keep the records required by this section for eight years after the due date for the end-of-year report. You may use any appropriate storage formats or media, including paper, microfilm, or computer diskettes.

(c) Keep a copy of the reports we require in §1051.725 and §1051.730.

(d) Keep the following additional records for each engine you produce under the ABT program:

(1) Engine family designation.

(2) Engine identification number.

(3) FEL and useful life.

(4) For vehicles that have standards expressed as g/kW-hr, maximum engine power.

(5) Build date and assembly plant.

(6) Purchaser and destination.

(e) We may require you to keep additional records or to send us relevant information not required by this section.

251. A new §1051.740 is added to read as follows:

§1051.740 Are there special averaging provisions for snowmobiles?

For snowmobiles, you may only use credits for the same phase or set of standards against which they were generated, except as allowed by this section.

(a) Restrictions. (1) You may not use any Phase 1 or Phase 2 credits for Phase 3 compliance.

(2) You may not use Phase 1 HC credits for Phase 2 HC compliance. However, because the Phase 1 and Phase 2 CO standards are the same, you may use Phase 1 CO credits for compliance with the Phase 2 CO standards.

(b) Special credits for next phase of standards. You may choose to generate credits early for banking for purposes of compliance with later phases of standards as follows:

(1) If your corporate average emission level at the end of the model year exceeds the applicable (current) phase of standards (without the use of traded or previously banked credits), you may choose to redesignate some of your snowmobile production to a calculation to generate credits for a future phase of standards. To generate credits the snowmobiles designated must have an FEL below the emission level of that set of standards. This can be done on a pollutant specific basis.

(2) Do not include the snowmobiles that you redesignate in the final compliance calculation of your average emission level for the otherwise applicable (current) phase of standards. Your average emission level for the remaining (non-redesignated) snowmobiles must comply with the otherwise applicable (current) phase of standards.

(3) Include the snowmobiles that you redesignate in a separate calculation of your average emission level for redesignated engines. Calculate credits using this average emission level relative to the specific pollutant in the future phase of standards. These credits may be used for compliance with the future standards.

(4) For generating early Phase 3 credits, you may generate credits for HC+NOx or CO separately as described:

(i) To determine if you qualify to generate credits in accordance with paragraphs (b)(1) through (3) of this section, you must meet the credit trigger level. For HC+NOx this value is 62 g/kW-hr (which would be the HC+NOx standard that would result from inputting the highest allowable CO standard (275 g/kW-hr) into the Phase 3 equation). For CO the value is 200 g/kW-hr (which would be the CO standard that would result from inputting the highest allowable HC+NOx standard (90 g/kW-hr) into the Phase 3 equation).

(ii) HC+NOx and CO credits for Phase 3 are calculated relative to the 62 g/kW-hr and 200 g/kW-hr values, respectively.

(5) Credits can also be calculated for Phase 3 using both sets of standards. Without regard to the trigger level values, if your net emission reduction for the redesignated averaging set exceeds the requirements of Phase 3 in §1051.103 (using both HC+NOx and CO in the Phase 3 equation in §1051.103), then your credits are the difference between the Phase 3 reduction requirement of that section and your calculated value.

252. A new §1051.745 is added to read as follows:

§1051.745 What can happen if I do not comply with the provisions of this subpart?

(a) For each engine family participating in the ABT program, the certificate of conformity is conditional upon full compliance with the provisions of this subpart during and after the model year. You are responsible to establish to our satisfaction that you fully comply with applicable requirements. We may void the certificate of conformity for an engine family if you fail to comply with any provisions of this subpart.

(b) You may certify your engine family to an FEL above an applicable standard based on a projection that you will have enough emission credits to avoid a negative credit balance for each averaging set for the applicable model year. However, we may void the certificate of conformity if you cannot show in your final report that you have enough actual emission credits to offset a deficit for any pollutant in an engine family.

(c) We may void the certificate of conformity for an engine family if you fail to keep records, send reports, or give us information we request.

(d) You may ask for a hearing if we void your certificate under this section (see §1051.820).

253. Section 1051.801 is revised to read as follows:

§1051.801 What definitions apply to this part?

The following definitions apply to this part. The definitions apply to all subparts unless we note otherwise. All undefined terms have the meaning the Act gives to them. The definitions follow:

Act means the Clean Air Act, as amended, 42 U.S.C. 7401 - 7671q.

Adjustable parameter means any device, system, or element of design that someone can adjust (including those which are difficult to access) and that, if adjusted, may affect emissions or engine performance during emission testing or normal in-use operation. This includes, but is not limited to, parameters related to injection timing and fueling rate. You may ask us to exclude a parameter that is difficult to access if it cannot be adjusted to affect emissions without significantly degrading engine performance, or if you otherwise show us that it will not be adjusted in a way that affects emissions during in-use operation.

Aftertreatment means relating to a catalytic converter, particulate filter, or any other system, component, or technology mounted downstream of the exhaust valve (or exhaust port) whose design function is to decrease emissions in the engine exhaust before it is exhausted to the environment. Exhaust-gas recirculation (EGR) and turbochargers are not aftertreatment.

All-terrain vehicle means a land-based or amphibious nonroad vehicle that meets the criteria listed in paragraph (1) of this definition; or, alternatively the criteria of paragraph (2) of this definition but not the criteria of paragraph (3) of this definition:

(1) Vehicles designed to travel on four low pressure tires, having a seat designed to be straddled by the operator and handlebars for steering controls, and intended for use by a single operator and no other passengers are all-terrain vehicles.

(2) Other all-terrain vehicles have three or more wheels and one or more seats, are designed for operation over rough terrain, are intended primarily for transportation, and have a maximum vehicle speed of 25 miles per hour or higher. Golf carts generally do not meet these criteria since they are generally not designed for operation over rough terrain.

(3) Vehicles that meet the definition of "offroad utility vehicle" in this section are not all-terrain vehicles. However, §1051.1(a) specifies that some offroad utility vehicles are required to meet the same requirements as all-terrain vehicles.

Amphibious vehicle means a vehicle with wheels or tracks that is designed primarily for operation on land and secondarily for operation in water.

Auxiliary emission-control device means any element of design that senses temperature, motive speed, engine RPM, transmission gear, or any other parameter for the purpose of activating, modulating, delaying, or deactivating the operation of any part of the emission-control system.

Brake power means the usable power output of the engine, not including power required to fuel, lubricate, or heat the engine, circulate coolant to the engine, or to operate aftertreatment devices.

Calibration means the set of specifications and tolerances specific to a particular design, version, or application of a component or assembly capable of functionally describing its operation over its working range.

Certification means obtaining a certificate of conformity for an engine family that complies with the emission standards and requirements in this part.

Certified emission level means the highest deteriorated emission level in an engine family for a given pollutant from either transient or steady-state testing.

Compression-ignition means relating to a type of reciprocating, internal-combustion engine that is not a spark-ignition engine.

Crankcase emissions means airborne substances emitted to the atmosphere from any part of the engine crankcase's ventilation or lubrication systems. The crankcase is the housing for the crankshaft and other related internal parts.

Critical emission-related component means any of the following components:

(1) Electronic control units, aftertreatment devices, fuel-metering components, EGR-system components, crankcase-ventilation valves, all components related to charge-air compression and cooling, and all sensors and actuators associated with any of these components.

(2) Any other component whose primary purpose is to reduce emissions.

Designated Compliance Officer means the Manager, Engine Programs Group (6405-J), U.S. Environmental Protection Agency, 1200 Pennsylvania Ave., NW., Washington, DC 20460.

Designated Enforcement Officer means the Director, Air Enforcement Division (2242A), U.S. Environmental Protection Agency, 1200 Pennsylvania Ave., NW.,Washington, DC 20460.

Deteriorated emission level means the emission level that results from applying the appropriate deterioration factor to the official emission result of the emission-data vehicle.

Deterioration factor means the relationship between emissions at the end of useful life and emissions at the low-hour test point, expressed in one of the following ways:

(1) For multiplicative deterioration factors, the ratio of emissions at the end of useful life to emissions at the low-hour test point.

(2) For additive deterioration factors, the difference between emissions at the end of useful life and emissions at the low-hour test point.

Emission-control system means any device, system, or element of design that controls or reduces the regulated emissions from an engine.

Emission-data vehicle means a vehicle or engine that is tested for certification. This includes vehicles or engines tested to establish deterioration factors.

Emission-related maintenance means maintenance that substantially affects emissions or is likely to substantially affect emission deterioration.

Engine configuration means a unique combination of engine hardware and calibration within an engine family. Engines within a single engine configuration differ only with respect to normal production variability.

Engine family has the meaning given in §1051.230.

Evaporative means relating to fuel emissions that result from permeation of fuel through the fuel system materials and from ventilation of the fuel system.

Exempted means relating to an engine that is not required to meet otherwise applicable standards. Exempted engines must conform to regulatory conditions specified for an exemption in this part 1051 or in 40 CFR part 1068. Exempted engines are deemed to be "subject to" the standards of this part, even though they are not required to comply with the otherwise applicable requirements. Engines exempted with respect to a certain tier of standards may be required to comply with an earlier tier of standards as a condition of the exemption; for example, engines exempted with respect to Tier 4 standards may be required to comply with Tier 3 standards.

Excluded means relating to an engine that either:

(1) Has been determined not to be a nonroad engine, as specified in 40 CFR 1068.30; or

(2) Is a nonroad engine that is excluded from this part 1051 under the provisions of §1051.5.

Exhaust-gas recirculation means a technology that reduces emissions by routing exhaust gases that had been exhausted from the combustion chamber(s) back into the engine to be mixed with incoming air before or during

combustion. The use of valve timing to increase the amount of residual exhaust gas in the combustion chamber(s) that is mixed with incoming air before or during combustion is not considered exhaust-gas recirculation for the purposes of this part.

Family emission limit (FEL) means an emission level declared by the manufacturer to serve in place of an otherwise applicable emission standard under the ABT program in subpart H of this part. The family emission limit must be expressed to the same number of decimal places as the emission standard it replaces. The family emission limit serves as the emission standard for the engine family with respect to all required testing.

Fuel line means all hoses or tubing containing either liquid fuel or fuel vapor, including hoses or tubing that deliver fuel to the engine, fuel hoses or tubing on the engine, hoses or tubing for the filler neck, hoses or tubing connecting dual fuel tanks, and hose or tubing connecting a fuel tank to a carbon canister.

Fuel system means all components involved in transporting, metering, and mixing the fuel from the fuel tank to the combustion chamber(s), including the fuel tank, fuel tank cap, fuel pump, fuel filters, fuel lines, carburetor or fuel-injection components, and all fuel-system vents. In the case where the fuel tank cap or other components (excluding fuel lines) are directly mounted on the fuel tank, they are considered to be a part of the fuel tank.

Fuel type means a general category of fuels such as diesel fuel or natural gas. There can be multiple grades within a single fuel type, such as high-sulfur or low-sulfur diesel fuel.

Good engineering judgment means judgments made consistent with generally accepted scientific and engineering principles and all available relevant information. See 40 CFR 1068.5 for the administrative process we use to evaluate good engineering judgment.

Hydrocarbon (HC) means the hydrocarbon group on which the emission standards are based for each fuel type. For alcohol-fueled engines, HC means total hydrocarbon equivalent (THCE). For all other engines, HC means nonmethane hydrocarbon (NMHC).

Identification number means a unique specification (for example, a model number/serial number combination) that allows someone to distinguish a particular vehicle or engine from other similar engines.

Low-hour means relating to an engine with stabilized emissions and represents the undeteriorated emission level. This would generally involve less than 100 hours or 1,000 kilometers of operation.

Manufacturer has the meaning given in section 216(1) of the Act. In general, this term includes any person who manufactures a vehicle or engine for sale in the United States or otherwise introduces a new vehicle or engine into commerce in the United States. This includes importers that import vehicles or engines for resale.

Maximum test power means the maximum brake power of an engine at test conditions.

Maximum engine power has the meaning given in 40 CFR 90.2

Maximum test speed has the meaning we give in 40 CFR 1065.1001.

Maximum test torque has the meaning we give in 40 CFR 1065.1001.

Model year means one of the following things:

(1) For freshly manufactured vehicles (see definition of "new," paragraph (1)), model year means one of the following:

(i) Calendar year.

(ii) Your annual new model production period if it is different than the calendar year. This must include January 1 of the calendar year for which the model year is named. It may not begin before January 2 of the previous calendar year and it must end by December 31 of the named calendar year.

(2) For an engine originally manufactured as a motor-vehicle engine or a stationary engine that is later intended to be used in a vehicle subject to the standards and requirements of this part 1051, model year means the calendar year in which the engine was originally produced (see definition of "new," paragraph (2)).

(3) For a nonroad engine that has been previously placed into service in an application covered by 40 CFR part 90, 91, or 1048, where that engine is installed in a piece of equipment that is covered by this part 1051, model year means the calendar year in which the engine was originally produced (see definition of "new ," paragraph (3)).

(4) For engines that are not freshly manufactured but are installed in new recreational vehicles, model year means the calendar year in which the engine is installed in the recreational vehicle (see definition of "new," paragraph (4)).

(5) For imported engines:

(i) For imported engines described in paragraph (5)(i) of the definition of "new," model year has the meaning given in paragraphs (1) through (4) of this definition.

(ii) For imported engines described in paragraph (5)(ii) of the definition of "new," model year means the calendar year in which the vehicle is modified.

Motor vehicle has the meaning we give in 40 CFR 85.1703(a). In general, motor vehicle means any vehicle that EPA deems to be capable of safe and practical use on streets or highways that has a maximum ground speed above 40 kilometers per hour (25 miles per hour) over level, paved surfaces.

New means relating to any of the following things:

(1) A freshly manufactured vehicle for which the ultimate purchaser has never received the equitable or legal title. This kind of vehicle might commonly be thought of as "brand new." In the case of this paragraph (1), the vehicle becomes new when it is fully assembled for the first time. The engine is no longer new when the ultimate purchaser receives the title or the product is placed into service, whichever comes first.

(2) An engine originally manufactured as a motor-vehicle engine or a stationary engine that is later intended to be used in a vehicle subject to the standards and requirements of this part 1051. In this case, the engine is no longer a motor-vehicle or stationary engine and becomes new. The engine is no longer new when it is placed into service as a recreational vehicle covered by this part 1051.

(3) A nonroad engine that has been previously placed into service in an application covered by 40 CFR part 90, 91, or 1048, where that engine is installed in a piece of equipment that is covered by this part 1051. The engine is no longer new when it is placed into service in a recreational vehicle covered by this part 1051. For example, this would apply to a marine propulsion engine that is no longer used in a marine vessel.

(4) An engine not covered by paragraphs (1) through (3) of this definition that is intended to be installed in a new vehicle covered by this part 1051. The engine is no longer new when the ultimate purchaser receives a title for the vehicle or it is placed into service, whichever comes first. This generally includes installation of used engines in new recreational vehicles.

(5) An imported vehicle or engine, subject to the following provisions:

(i) An imported recreational vehicle or recreational-vehicle engine covered by a certificate of conformity issued under this part that meets the criteria of one or more of paragraphs (1) through (4) of this definition, where the original manufacturer holds the certificate, is new as defined by those applicable paragraphs.

(ii) An imported recreational vehicle or recreational-vehicle engine covered by a certificate of conformity issued under this part, where someone other than the original manufacturer holds the certificate (such as when the engine is modified after its initial assembly), becomes new when it is imported. It is no longer new when the ultimate purchaser receives a title for the vehicle or engine or it is placed into service, whichever comes first.

(iii) An imported recreational vehicle or recreational-vehicle engine that is not covered by a certificate of conformity issued under this part at the time of importation is new, but only if it was produced on or after the 2007 model year. This addresses uncertified engines and equipment initially placed into service that someone seeks to import into the United States. Importation of this kind of new nonroad engine (or equipment containing such an engine) is generally prohibited by 40 CFR part 1068.

Noncompliant means relating to a vehicle that was originally covered by a certificate of conformity, but is not in the certified configuration or otherwise does not comply with the conditions of the certificate.

Nonconforming means relating to vehicle not covered by a certificate of conformity that would otherwise be subject to emission standards.

Nonmethane hydrocarbon means the difference between the emitted mass of total hydrocarbons and the emitted mass of methane.

Nonroad means relating to nonroad engines or equipment that includes nonroad engines.

Nonroad engine has the meaning we give in 40 CFR 1068.30. In general this means all internal-combustion engines except motor-vehicle engines, stationary engines, engines used solely for competition, or engines used in aircraft.

Off-highway motorcycle means a two-wheeled vehicle with a nonroad engine and a seat (excluding marine vessels and aircraft). (Note: highway motorcycles are regulated under 40 CFR part 86.)

Official emission result means the measured emission rate for an emission-data vehicle on a given duty cycle before the application of any deterioration factor, but after the applicability of regeneration adjustment factors.

Offroad utility vehicle means a nonroad vehicle that has four or more wheels, seating for two or more persons, is designed for operation over rough terrain, and has either a rear payload 350 pounds or more or seating for six or more passengers. Vehicles intended primarily for recreational purposes that are not capable of transporting six passengers (such as dune buggies) are not offroad utility vehicles. (Note: §1051.1(a) specifies that some offroad utility vehicles are required to meet the requirements that apply for all-terrain vehicles.)

Oxides of nitrogen has the meaning we give in 40 CFR part 1065.

Phase 1 means relating to Phase 1 standards of §§1051.103, 1051.105, or 1051.107, or other Phase 1 standards specified in subpart B of this part.

Phase 2 means relating to Phase 2 standards of §1051.103, or other Phase 2 standards specified in subpart B of this part.

Phase 3 means relating to Phase 3 standards of §1051.103, or other Phase 3 standards specified in subpart B of this part.

Placed into service means put into initial use for its intended purpose.

Point of first retail sale means the location at which the initial retail sale occurs. This generally means an equipment dealership, but may also include an engine seller or distributor in cases where loose engines are sold to the general public for uses such as replacement engines.

Recreational means, for purposes of this part, relating to snowmobiles, all-terrain vehicles, off-highway motorcycles, and other vehicles that we regulate under this part. Note that 40 CFR part 90 applies to engines used in other recreational vehicles.

Revoke has the meaning we give in 40 CFR 1068.30.

Round means to round numbers according to NIST Special Publication 811(incorporated by reference in §1051.810), unless otherwise specified.

Scheduled maintenance means adjusting, repairing, removing, disassembling, cleaning, or replacing components or systems periodically to keep a part or system from failing, malfunctioning, or wearing prematurely. It also may mean actions you expect are necessary to correct an overt indication of failure or malfunction for which periodic maintenance is not appropriate.

Small-volume manufacturer means one of the following:

(1) For motorcycles and ATVs, a manufacturer that sold motorcycles or ATVs before 2003 and had annual U.S.-directed production of no more than 5,000 off-road motorcycles and ATVs (combined number) in 2002 and all earlier calendar years. For manufacturers owned by a parent company, the limit applies to the production of the parent company and all of its subsidiaries.

(2) For snowmobiles, a manufacturer that sold snowmobiles before 2003 and had annual U.S.-directed production of no more than 300 snowmobiles in 2002 and all earlier model years. For manufacturers owned by a parent company, the limit applies to the production of the parent company and all of its subsidiaries.

(3) A manufacturer that we designate to be a small-volume manufacturer under §1051.635.

Snowmobile means a vehicle designed to operate outdoors only over snow-covered ground, with a maximum width of 1.5 meters or less.

Spark-ignition means relating to a gasoline-fueled engine or any other type of engine with a spark plug (or other sparking device) and with operating characteristics significantly similar to the theoretical Otto combustion cycle. Spark-ignition engines usually use a throttle to regulate intake air flow to control power during normal operation.

Suspend has the meaning we give in 40 CFR 1068.30.

Test vehicle or engine means an engine in a test sample.

Test sample means the collection of engines selected from the population of an engine family for emission testing. This may include testing for certification, production-line testing, or in-use testing.

Total hydrocarbon means the combined mass of organic compounds measured by the specified procedure for measuring total hydrocarbon, expressed as a hydrocarbon with a hydrogen-to-carbon mass ratio of 1.85:1.

Total hydrocarbon equivalent means the sum of the carbon mass contributions of non-oxygenated hydrocarbons, alcohols and aldehydes, or other organic compounds that are measured separately as contained in a gas sample,

expressed as exhaust hydrocarbon from petroleum-fueled engines. The hydrogen-to-carbon ratio of the equivalent hydrocarbon is 1.85:1.

Ultimate purchaser means, with respect to any new nonroad equipment or new nonroad engine, the first person who in good faith purchases such new nonroad equipment or new nonroad engine for purposes other than resale.

United States has the meaning we give in 40 CFR 1068.30.

Upcoming model year means for an engine family the model year after the one currently in production.

U.S.-directed production volume means the number of engine units, subject to the requirements of this part, produced by a manufacturer for which the manufacturer has a reasonable assurance that sale was or will be made to ultimate purchasers in the United States.

Useful life means the period during which a vehicle is required to comply with all applicable emission standards, specified as a number of kilometers, hours, and/or calendar years. If an engine has no hour meter, disregard any specified value for useful life in hours. If an engine has no odmeter, disregard any specified value for useful life in kilometers. The useful life for an engine family must be at least as long as both of the following:

(1) The expected average service life before the vehicle is remanufactured or retired from service.

(2) The minimum useful life value.

Void has the meaning we give in 40 CFR 1068.30.

We (us, our) means the Administrator of the Environmental Protection Agency and any authorized representatives.

Wide-open throttle means maximum throttle opening. Unless this is specified at a given speed, it refers to maximum throttle opening at maximum speed. For electronically controlled or other engines with multiple possible fueling rates, wide-open throttle also means the maximum fueling rate at maximum throttle opening under test conditions.

254. Section 1051.805 is amended by adding "CFR", "HC", and "NIST" to the table in alphabetical order to read as follows:

§1051.805 What symbols, acronyms, and abbreviations does this part use?

The following symbols, acronyms, and abbreviations apply to this part:

* * * * * * *	
CFR	Code of Federal Regulations.
* * * * * * *	
HC	hydrocarbon.
* * * * * * *	
NIST	National Institute of Standards and Technology.
* * * * * * *	

255. Section 1051.810 is revised to read as follows:

§1051.810 What materials does this part reference?

Documents listed in this section have been incorporated by reference into this part. The Director of the Federal Register approved the incorporation by reference as prescribed in 5 U.S.C. 552(a) and 1 CFR part 51. Anyone may inspect copies at the U.S. EPA, Air and Radiation Docket and Information Center, 1301 Constitution Ave., NW., Room B102, EPA West Building, Washington, DC 20460 or at the National Archives and Records Administration (NARA). For information on the availability of this material at NARA, call 202-741-6030, or go to: http://www.archives.gov/federal_register/code_of_federal_regulations/ibr_locations.html.

(a) ASTM material. Table 1 of this section lists material from the American Society for Testing and Materials that we have incorporated by reference. The first column lists the number and name of the material. The second column lists the sections of this part where we reference it. Anyone may purchase copies of these materials from the American Society for Testing and Materials, 100 Barr Harbor Dr., P.O. Box C700, West Conshohocken, PA 19428. Table 1 follows:

Table 1 of §1051.810—
ASTM Materials

Document number and name	Part 1051 reference
ASTM D471-98, Standard Test Method for Rubber Property—Effect of Liquids.	1051.501
ASTM D814-95 (reapproved 2000), Standard Test Method for Rubber Property—Vapor Transmission of Volatile Liquids.	1051.245

(b) SAE material. Table 2 of this section lists material from the Society of Automotive Engineering that we have incorporated by reference. The first column lists the number and name of the material. The second column lists the sections of this part where we reference it. Anyone may purchase copies of these materials from the Society of Automotive Engineers, 400 Commonwealth Drive, Warrendale, PA 15096. Table 2 follows:

Table 2 of §1051.810—
SAE Materials

Document number and name	Part 1051 reference
SAE J30, Fuel and Oil Hoses, June 1998.	1051.245, 1051.501
SAE J1930, Electrical/Electronic Systems Diagnostic Terms, Definitions, Abbreviations, and Acronyms, May 1998.	1051.135
SAE J2260, Nonmetallic Fuel System Tubing with One or More Layers, November 1996.	1051.245

(c) NIST material. Table 3 of this section lists material from the National Institute of Standards and Technology that we have incorporated by reference. The first column lists the number and name of the material. The second column lists the sections of this part where we reference it. Anyone may purchase copies of these materials from the Government Printing Office, Washington, DC 20402 or download them from the Internet at http://physics.nist.gov/Pubs/SP811/. Table 3 follows:

Table 3 of §1051.810—NIST Materials

Document number and name	Part 1051 reference
NIST Special Publication 811, Guide for the Use of the International System of Units (SI), 1995 Edition.	1051.801

256. Section 1051.815 is revised to read as follows:

§1051.815 What provisions apply to confidential information?

(a) Clearly show what you consider confidential by marking, circling, bracketing, stamping, or some other method.

(b) We will store your confidential information as described in 40 CFR part 2. Also, we will disclose it only as specified in 40 CFR part 2. This applies both to any information you send us and to any information we collect from inspections, audits, or other site visits.

(c) If you send us a second copy without the confidential information, we will assume it contains nothing confidential whenever we need to release information from it.

(d) If you send us information without claiming it is confidential, we may make it available to the public without further notice to you, as described in 40 CFR 2.204.

257. Section 1051.820 is revised to read as follows:

§1051.820 How do I request a hearing?

(a) You may request a hearing under certain circumstances, as described elsewhere in this part. To do this, you must file a written request, including a description of your objection and any supporting data, within 30 days after we make a decision.

(b) For a hearing you request under the provisions of this part, we will approve your request if we find that your request raises a substantial factual issue.
(c) If we agree to hold a hearing, we will use the procedures specified in 40 CFR part 1068, subpart G.

258. Part 1065 is revised to read as follows:

259. Part 1065 is revised to read as follows:

Part 1065— ENGINE-TESTING PROCEDURES

Subpart A— Applicability and General Provisions

Sec.

1065.1 Applicability.

1065.2 Submitting information to EPA under this part.

1065.5 Overview of this part 1065 and its relationship to the standard-setting part.

1065.10 Other procedures.

1065.12 Approval of alternate procedures.

1065.15 Overview of procedures for laboratory and field testing.

1065.20 Units of measure and overview of calculations.

1065.25 Recordkeeping.

Subpart B— Equipment Specifications

1065.101 Overview.

1065.110 Dynamometers and operator demand.

1065.120 Fuel properties and fuel temperature and pressure.

1065.122 Engine fluids, heat rejection, and engine accessories.

1065.125 Engine intake air.

1065.130 Engine exhaust.

1065.140 Dilution for gaseous and PM constituents.

1065.145 Gaseous and PM probes, transfer lines, and sampling system components.

1065.150 Continuous sampling.

1065.170 Batch sampling for gaseous and PM constituents.

1065.190 PM-stabilization and weighing environments for gravimetric analysis.

1065.195 PM-stabilization environment for in-situ analyzers.

Subpart C— Measurement Instruments

1065.201 Overview and general provisions.

1065.202 Data recording and control.

1065.205 Performance specifications for measurement instruments.

MEASUREMENT OF ENGINE PARAMETERS AND AMBIENT CONDITIONS

1065.210 Speed and torque transducers.

1065.215 Pressure transducers, temperature sensors, and dewpoint sensors.

FLOW-RELATED MEASUREMENTS

1065.220 Fuel flow meter.

1065.225 Intake-air flow meter.

1065.230 Raw exhaust flow meter.

1065.240 Dilution air and diluted exhaust flow meters.

1065.245 Sample flow meter for batch sampling.

1065.248 Gas divider.

CO AND CO_2 MEASUREMENTS

1065.250 Nondispersive infra-red analyzer.

HYDROCARBON MEASUREMENTS

1065.260 Flame ionization detector.

1065.265 Nonmethane cutter.

1065.267 Gas chromatograph.

NO_X MEASUREMENTS

1065.270 Chemiluminescent detector.

1065.272 Nondispersive ultraviolet analyzer.

1065.274 Zirconia (ZrO_2) analyzer.

O_2 MEASUREMENTS

1065.280 Paramagnetic detection analyzer.

1065.284 Zirconia (ZrO_2) analyzer.

PM MEASUREMENTS

1065.290 PM gravimetric balance.

1065.295 PM inertial balance for field-testing analysis.

Subpart D—Calibrations and Performance Checks

1065.301 Overview and general provisions.

1065.303 Summary of required calibration and performance checks

1065.305 Performance checks for accuracy, repeatability, and noise.

1065.307 Linearity check.

1065.308 Continuous gas analyzer system response check.

MEASUREMENT OF ENGINE PARAMETERS AND AMBIENT CONDITIONS

1065.310 Torque calibration.

1065.315 Pressure, temperature, and dewpoint calibration.

FLOW-RELATED MEASUREMENTS

1065.320 Fuel flow calibration.

1065.325 Intake flow calibration.

1065.330 Exhaust flow calibration.

1065.340 Diluted exhaust flow (CVS) calibration.

1065.341 CVS and batch sampler verification (i.e. propane check).

1065.345 Vacuum-side leak check.

CO AND CO_2 MEASUREMENTS

1065.350 H_2O interference check for CO_2 NDIR analyzers.

1065.355 H_2O and CO_2 interference check for CO NDIR analyzers.

HYDROCARBON MEASUREMENTS

1065.360 FID optimization and performance checks.

1065.362 Raw exhaust FID O_2 interference check.

1065.365 Nonmethane cutter penetration fractions determination.

NOx MEASUREMENTS

1065.370 CLD CO_2 and H_2O quench check.

1065.372 NDUV analyzer NMHC and H_2O interference check.

1065.374 ZrO_2 NO_x analyzer NH_3 interference and NO_2 response checks.

1065.376 Chiller NO_2 penetration.

1065.378 NO_2-to-NO converter conversion check.

PM MEASUREMENTS

1065.390 PM balance and weighing process performance check.

Subpart E— Engine Selection, Preparation, and Maintenance

1065.401 Test engine selection.

1065.405 Test engine preparation and maintenance.

1065.410 Maintenance limits for stabilized test engines.

1065.415 Durability demonstration.

Subpart F— Running an Emission Test in the Laboratory

1065.501 Overview.

1065.510 Engine mapping.

1065.512 Duty cycle generation.

1065.514 Cycle validation criteria.

1065.520 Pre-test verification procedures and pre-test data collection.

1065.525 Engine starting, restarting, and shutdown.

1065.530 Emission test sequence.

1065.545 Validation of proportional flow control for batch sampling.

1065.550 Constituent analyzer range validation, drift validation, and drift correction.

1065.590 PM sample preconditioning and tare weighing.

1065.595 PM sample post-conditioning and total weighing.

Subpart G— Calculations and Data Requirements

1065.601 Overview.

1065.602 Statistics.

1065.605 Field test system overall performance check.

1065.610 Test cycle generation.

1065.630 1980 international gravity formula.

1065.640 PDP and venturi (SSV and CFV) calibration calculations.

1065.642 SSV, CFV, and PDP flow rate calculations.

1065.645 Amount of water in an ideal gas.

1065.650 Emission calculations.

1065.655 Chemical balances of fuel, intake air, and exhaust.

1065.657 Drift validation and correction.

1065.658 Noise correction.

1065.659 Removed water correction.

1065.660 THC and NMHC determination.

1065.665 THCE and NMHCE determination.

1065.667 Dilution air background emission correction.

1065.670 NO_x intake-air humidity correction.

1065.672 CLD quench check calculations.

1065.690 PM sample media buoyancy correction.

1065.695 Data requirements.

Subpart H— Engine Fluids, Test Fuels, and Analytical Gases

1065.701 General requirements for test fuels.

1065.703 Distillate diesel fuel.

1065.705 Residual fuel. [Reserved]

1065.710 Gasoline.

1065.715 Natural gas.

1065.720 Liquefied petroleum gas.

1065.740 Lubricants.

1065.745 Coolants.

1065.750 Analytical Gases.

1065.790 Mass standards.

Subpart I— Testing with Oxygenated Fuels

1065.801 Applicability.

1065.805 Sampling system.

1065.810 Calculations.

Subpart J— Field Testing

1065.901 Applicability.

1065.905 General provisions.

1065.910 Field-testing equipment.

1065.915 Measurement instruments.

1065.920 Calibrations and performance checks.

1065.925 Measurement equipment and analyzer preparation.

1065.930 Engine starting, restarting, and shutdown.

1065.935 Emission test sequence.

1065.940 Emission calculations.

Subpart K— Definitions and Other Reference Information

1065.1001 Definitions.

1065.1005 Symbols, abbreviations, acronyms, and units of measure.

1065.1010 Reference materials.

Authority: 42 U.S.C. 7401 - 7671q.

Subpart A— Applicability and General Provisions

§1065.1 Applicability.

(a) This part describes the procedures that apply to testing we require for the following engines or for vehicles using the following engines:

(1) Model year 2008 and later heavy-duty highway engines we regulate under 40 CFR part 86. For model years 2006 and 2007, manufacturers may use the test procedures in this part or those specified in 40 CFR part 86, subpart N.

(2) Land-based nonroad diesel engines we regulate under 40 CFR part 1039.

(3) Large nonroad spark-ignition engines we regulate under 40 CFR part 1048.

(4) Vehicles we regulate under 40 CFR part 1051 (such as snowmobiles and off-highway motorcycles) based on engine testing. See 40 CFR part 1051, subpart F, for standards and procedures that are based on vehicle testing.

(b) The procedures of this part may apply to other types of engines, as described in this part and in the standard-setting part.

(c) This part is addressed to you as a manufacturer, but it applies equally to anyone who does testing for you.

(d) Paragraph (a) of this section identifies the parts of the CFR that define emission standards and other requirements for particular types of engines. In this part, we refer to each of these other parts generically as the "standard-setting part." For example, 40 CFR part 1051 is always the standard-setting part for snowmobiles.

(e) Unless we specify otherwise, the terms “procedures” and “test procedures” in this part include all aspects of engine testing, including the equipment specifications, calibrations, calculations, and other protocols and procedural specifications needed to measure emissions.

(f) For vehicles subject to this part and regulated under vehicle-based standards, use good engineering judgment to interpret the term "engine" in this part to include vehicles where appropriate.

§1065.2 Submitting information to EPA under this part.
(a) You are responsible for statements and information in your applications for certification, requests for approved procedures, selective enforcement audits, laboratory audits, production-line test reports, field test reports, or any other statements you make to us related to this part 1065.
(b) In the standard-setting part and in 40 CFR 1068.101, we describe your obligation to report truthful and complete information and the consequences of failing to meet this obligation. See also 18 U.S.C. 1001 and 42 U.S.C. 7413(c)(2).
(c) We may void any certificates associated with a submission of information if we find that you intentionally submitted false, incomplete, or misleading information. For example, if we find that you intentionally submitted incomplete information to mislead EPA when requesting approval to use alternate test procedures, we may void the certificates for all engines families certified based on emission data collected using the alternate procedures.
(d) We may require an authorized representative of your company to approve and sign the submission, and to certify that all of the information submitted is accurate and complete.
(e) See 40 CFR 1068.10 for provisions related to confidential information. Note however that under 40 CFR 2.301, emission data is generally not eligible for confidential treatment.

§1065.5 Overview of this part 1065 and its relationship to the standard-setting part.
(a) This part specifies procedures that apply generally to testing various categories of engines. See the standard-setting part for directions in applying specific provisions in this part for a particular type of engine. Before using this part's procedures, read the standard-setting part to answer at least the following questions:
(1) What duty cycles must I use for laboratory testing?
(2) Should I warm up the test engine before measuring emissions, or do I need to measure cold-start emissions during a warm-up segment of the duty cycle?
(3) Which exhaust constituents do I need to measure?
(4) Does testing require full-flow dilute sampling? Is raw sampling acceptable? Is partial-flow sampling acceptable?
(5) Do any unique specifications apply for test fuels?
(6) What maintenance steps may I take before or between tests on an emission-data engine?
(7) Do any unique requirements apply to stabilizing emission levels on a new engine?
(8) Do any unique requirements apply to test limits, such as ambient temperatures or pressures?
(9) Is field testing required, and are there different emission standards or procedures that apply to field testing?
(10) Are there any emission standards specified at particular engine-operating conditions or ambient conditions?
(b) The testing specifications in the standard-setting part may differ from the specifications in this part. In cases where it is not possible to comply with both the standard-setting part and this part, you must comply with the specifications in the standard-setting part. The standard-setting part may also allow you to deviate from the procedures of this part for other reasons.
(c) The following table shows how this part divides testing specifications into subparts:

This subpart...	Describes these specifications or procedures...
Subpart A	Applicability and general provisions.
Subpart B	Equipment for testing.
Subpart C	Measurement instruments for testing.
Subpart D	Calibration and performance checks for measurement systems.
Subpart E	How to prepare engines for testing, including service accumulation.
Subpart F	How to run an emission test.
Subpart G	Test procedure calculations.
Subpart H	Fuels, engine fluids, analytical gases, and other calibration standards for testing.
Subpart I	Special procedures related to oxygenated fuels.
Subpart J	How to do field testing of in-use vehicles.
Subpart K	Definitions, abbreviations, and other reference information.

§1065.10 Other procedures.

(a) Your testing. The procedures in this part apply for all testing you do to show compliance with emission standards, with certain exceptions listed in this section. In some other sections in this part, we allow you to use other procedures (such as less precise or less accurate procedures) if they do not affect your ability to show that your engines comply with all applicable emission standards. This generally requires emission levels to be far enough below the applicable emission standards so that any errors caused by greater imprecision or inaccuracy do not affect your ability to state unconditionally that the engines meet all applicable emission standards.

(b) Our testing. These procedures generally apply for testing that we do to determine if your engines comply with applicable emission standards. We may perform other testing as allowed by the Act.

(c) Exceptions. We may allow or require you to use procedures other than those specified in this part in the following cases, which may apply to laboratory testing, field testing, or both:

(1) The procedures in this part are intended to produce emission measurements equivalent to those that would result from measuring emissions during in-use operation using the same engine configuration as installed in a vehicle. If good engineering judgment indicates that use of the procedures in this part for an engine would result in measurements that do not represent in-use operation, you must notify us. If we determine that using these procedures would result in measurements that are significantly unrepresentative and that changing the procedures would result in more representative measurements—and not decrease the stringency of emission standards—we will specify changes to the procedures. In your notification to us, you should recommend specific changes you think are necessary.

(2) You may request to use special procedures if your engine cannot be tested using the specified procedures. We will approve your request if we determine that it would produce emission measurements that represent in-use operation and we determine that it can be used to show compliance with the requirements of the standard-setting part. The following situations illustrate examples that may require special procedures:

(i) Your engine cannot operate on the specified duty cycle. In this case, tell us in writing why you cannot satisfactorily test your engine using this part's procedures and ask to use a different approach.

(ii) Your electronic control module requires specific input signals that are not available during dynamometer testing. In this case, tell us in writing what signals you will simulate, such as vehicle speed or transmission signals, and explain why these signals are necessary for representative testing.

(3) In a given model year, you may use procedures required for later model year engines without request. If you upgrade your testing facility in stages, you may rely on a combination of procedures for current and later model year engines as long as you can ensure, using good engineering judgment, that any combination you use does not affect your ability to show compliance with the applicable emission standards.

(4) In a given model year, you may ask to use procedures allowed for earlier model year engines. We will approve this only if you show us that using the procedures allowed for earlier model years does not affect your ability to show compliance with the applicable emission standards.

(5) You may ask to use emission data collected using other procedures, such as those of the California Air Resources Board or the International Organization for Standardization. We will approve this only if you show us that using these other procedures does not affect your ability to show compliance with the applicable emission standards.

(6) You may request to use alternate procedures that are equivalent to allowed procedures. Follow the instructions in §1065.12. We will consider alternate procedures equivalent if they are more accurate or more precise than allowed procedures. You may request to use a particular device or method for laboratory testing even though it was originally designed for field testing. We may approve your request by telling you directly, or we may issue guidance announcing our approval of a specific alternate procedure, which would make additional requests for approval unnecessary.

(d) If we require you to request approval to use other procedures under paragraph (c) of this section, you may not use them until we approve your request.

§1065.12 Approval of alternate procedures.

(a) To get approval for an alternate procedure under §1065.10(c) where necessary, send the Designated Compliance Officer an initial written request describing the alternate procedure and why you believe it is equivalent to the specified procedure. We may approve your request based on this information alone, or, as described in this section, we may ask you to submit additional information showing that the alternate procedure is consistently and reliably equivalent to the specified procedure.

(b) We may make our approval under this section conditional upon meeting other requirements or specifications. We may limit our approval to certain time frames, specific types of engines, specific duty cycles, or specific emission standards.

(c) Although we will make every effort to approve only alternate procedures that completely meet our requirements, we may revoke our approval of an alternate procedure if new information shows that it is significantly not equivalent to the specified procedure. If we do this, we will grant time to switch to testing using an allowed procedure, considering the following factors:

(1) The cost, difficulty, and availability to switch to a procedure that we allow.

(2) The degree to which the alternate procedure affects your ability to show that your engines comply with all applicable emission standards.

(3) Any relevant factors considered in our original approval.

(d) If we do not approve your proposed alternate procedure based on the information in your initial request, we may ask you to send the following information to fully evaluate your request:

(1) Theoretical basis. Give a brief technical description explaining why you believe the proposed alternate procedure should result in emission measurements equivalent to those using the specified procedure. You may include equations, figures, and references. You should consider the full range of parameters that may affect equivalence. For example, for a request to use a different NO_x measurement procedure, you should theoretically relate the alternate detection principle to the specified detection principle over the expected concentration ranges for NO, NO_2, and interference gases. For a request to use a different PM measurement procedure, you should explain the principles by which the alternate procedure quantifies particulate mass independent of PM size and composition, and how it is affected by changes in semi-volatile phase distribution. For any proportioning or integrating procedure, such as a partial-flow dilution system, you should compare the alternate procedure's theoretical response to the expected response under the specified procedure.

(2) Technical description. Describe briefly any hardware or software needed to perform the alternate procedure. You may include dimensioned drawings, flowcharts, schematics, and component specifications. Explain any necessary calculations or other data manipulation.

(3) Procedure execution. Describe briefly how to perform the alternate procedure and suggest a level of training an operator should have to achieve acceptable results. Summarize the installation, calibration, operation, and

maintenance procedures in a step-by-step format. Describe how any calibration is performed using NIST-traceable standards or other similar standards we approve. Calibration must be specified by using known quantities and must not be specified by comparing with other allowed procedures.

(4) Data-collection techniques. Compare measured emission results using the proposed alternate procedure and the specified procedure, as follows:

(i) Both procedures must be calibrated independently to NIST-traceable standards or to other similar standards we approve.

(ii) Include measured emission results from all applicable duty cycles. Measured emission results should show that the test engine meets all applicable emission standards according to specified procedures.

(iii) Use statistical methods to evaluate the emission measurements, such as those described in paragraph (e) of this section.

(e) We may give you specific directions regarding methods for statistical analysis, or we may approve other methods that you propose. Absent any other directions from us, you may use a *t*-test and an *F*-test calculated according to §1065.602 to evaluate whether your proposed alternate procedure is equivalent to the specified procedure. We recommend that you consult a statistician if you are unfamiliar with these statistical tests. Perform the tests as follows:

(1) Repeat measurements for all applicable duty cycles at least seven times for each procedure. You may use laboratory duty cycles to evaluate field-testing procedures. Be sure to include all available results to evaluate the precision and accuracy of the proposed alternate procedure, as described in §1065.2.

(2) Demonstrate the accuracy of the proposed alternate procedure by showing that it passes a two-sided *t*-test. Use an unpaired *t*-test, unless you show that a paired *t*-test is appropriate under both of the following provisions:

(i) For paired data, the population of the paired differences from which you sampled paired differences must be independent. That is, the probability of any given value of one paired difference is unchanged by knowledge of the value of another paired difference. For example, your paired data would violate this requirement if your series of paired differences showed a distinct increase or decrease that was dependent on the time at which they were sampled.

(ii) For paired data, the population of paired differences from which you sampled the paired differences must have a normal (i.e., Gaussian) distribution. If the population of paired difference is not normally distributed, consult a statistician for a more appropriate statistical test, which may include transforming the data with a mathematical function or using some kind of non-parametric test.

(3) Show that t is less than the critical t value, t_{crit}, tabulated in §1065.602, for the following confidence intervals:

(i) 90 % for a proposed alternate procedure for laboratory testing.

(ii) 95 % for a proposed alternate procedure for field testing.

(4) Demonstrate the precision of the proposed alternate procedure by showing that it passes an *F*-test. Use one sample from the reference procedure and one sample from the alternate procedure to perform an *F*-test. The samples must meet the following requirements:

(i) Within each sample, the values must be independent. That is, the probability of any given value in a sample must be unchanged by knowledge of another value in that sample. For example, your data would violate this requirement if your series of values from one of the samples showed a distinct increase or decrease that was dependent on the time at which they were sampled.

(ii) For each sample, the population of values from which you sampled must have a normal (i.e., Gaussian) distribution. If the population of values is not normally distributed for each sample, consult a statistician for a more appropriate statistical test, which may include transforming the data with a mathematical function or using some kind of non-parametric test.

(iii) The two samples must be independent of each other. That is, the probability of any given value in one sample must be unchanged by knowledge of another value in the other sample. For example, your data would violate this requirement if one sample showed a distinct increase or decrease that was dependent on a value in the other sample. Note that a trend of emission changes from an engine would not violate this requirement.

(iv) If you collect paired data for the paired *t*-test in paragraph (e)(2) in this section, you may select some subsets of that data for the *F*-test. If you do this, select subsets that do not mask the precision of the measurement procedure. We recommend selecting such subsets from data collected using the same engine, measurement instruments, and test cycle.

(5) Show that *F* is less than the critical *F* value, F_{crit}, tabulated in §1065.602. If you have several *F*-test results from several subsets of data, show that the mean *F*-test value is less than the mean critical *F* value for all the subsets. Evaluate F_{crit}, based on the following confidence intervals:

(i) 90 % for a proposed alternate procedure for laboratory testing.

(ii) 95 % for a proposed alternate procedure for field testing.

§1065.15 Overview of procedures for laboratory and field testing.

This section outlines the procedures to test engines that are subject to emission standards.

(a) In the standard-setting part, we set brake-specific emission standards in g/kW·hr (or g/hp·hr), for the following constituents:

(1) Total oxides of nitrogen, NO_x.

(2) Hydrocarbons (HC), which may be expressed in the following ways:

(i) Total hydrocarbons, THC.

(ii) Nonmethane hydrocarbons, NMHC, which results from subtracting methane (CH_4) from THC.

(iii) Total hydrocarbon-equivalent, THCE, which results from adjusting THC mathematically to be equivalent on a carbon-mass basis.

(iv) Nonmethane hydrocarbon-equivalent, NMHCE, which results from adjusting NMHC mathematically to be equivalent on a carbon-mass basis.

(3) Particulate mass, PM.

(4) Carbon monoxide, CO.

(b) Note that some engines are not subject to standards for all the emission constituents identified in paragraph (a) of this section.

(c) We set brake-specific emission standards over test intervals, as follows:

(1) Engine operation. Engine operation is specified over a test interval. A test interval is the time over which an engine's total mass of emissions and its total work are determined. Refer to the standard-setting part for the specific test intervals that apply to each engine. Testing may involve measuring emissions and work under the following types of engine operation:

(i) Laboratory testing. Under this type of testing, you determine brake-specific emissions for duty-cycle testing with an engine and dynamometer in a laboratory This typically consists of one or more test intervals, each defined by a sequence of speeds and torques, which an engine must follow. If the standard-setting part allows it, you may also simulate field testing by running an engine on a dynamometer in a laboratory.

(ii) Field testing. This type of testing consists of normal in-use engine operation while an engine is installed in a vehicle.

(2) Constituent determination. Determine the total mass of each constituent over a test interval by selecting from the following methods:

(i) Continuous sampling. In continuous sampling, measure the constituent's concentration continuously from raw or dilute exhaust. Multiply this concentration by the corresponding (synchronous) flow rate of the raw or dilute exhaust from which it is sampled to determine the constituent's flow rate. Integrate the constituent's flow rate continuously over the test interval to determine the total mass of the emitted constituent.

(ii) Batch sampling. In batch sampling, continuously extract and store a sample of raw or dilute exhaust for later measurement. Extract a sample proportional to the raw or dilute exhaust flow rate. You may extract and store a proportional sample of exhaust in an appropriate container, such as a bag, and then measure HC, CO, and NO_x concentrations in the container after the test interval. You may deposit PM from proportionally extracted exhaust onto an appropriate substrate, such as a filter. In this case, divide the PM

by the amount of filtered exhaust to calculate the PM concentration. Multiply batch sampling amounts by the total flow (raw or dilute) from which it was extracted during the test interval. This product is the total mass of the emitted constituent.

(iii) You may use continuous and batch sampling simultaneously during a test interval, as follows:

(A) You may use continuous sampling for some constituents and batch sampling for others.

(B) You may use continuous and batch sampling for a single constituent, with one being a redundant measurement. See §1065.201 for more information on redundant measurements.

(3) Work determination. Determine work over a test interval by one of the following methods:

(i) Speed and torque. For laboratory testing, synchronously multiply speed and brake torque to calculate instantaneous values for engine brake power. Integrate engine brake power over a test interval to determine total work.

(ii) Fuel consumed and brake-specific fuel consumption. Directly measure fuel consumed or calculate it with chemical balances of the fuel, intake air, and exhaust. To calculate fuel consumed by a chemical balance, you must also measure either intake-air flow rate or exhaust flow rate. Divide the fuel consumed during a test interval by the brake-specific fuel consumption to determine work over the test interval. For laboratory testing, calculate the brake-specific fuel consumption using fuel consumed and speed and torque over a test interval. For field testing, refer to the standard-setting part and §1065.915 for selecting an appropriate value for brake-specific fuel consumption.

(d) Refer to §1065.650 for calculations to determine brake-specific emissions.

(e) See Figure 1 of §1065.15 for an illustration of the default laboratory measurement configuration and the other allowed measurement configurations described in this part 1065.

Figure 1 of §1065.15—Allowed measurement configurations.

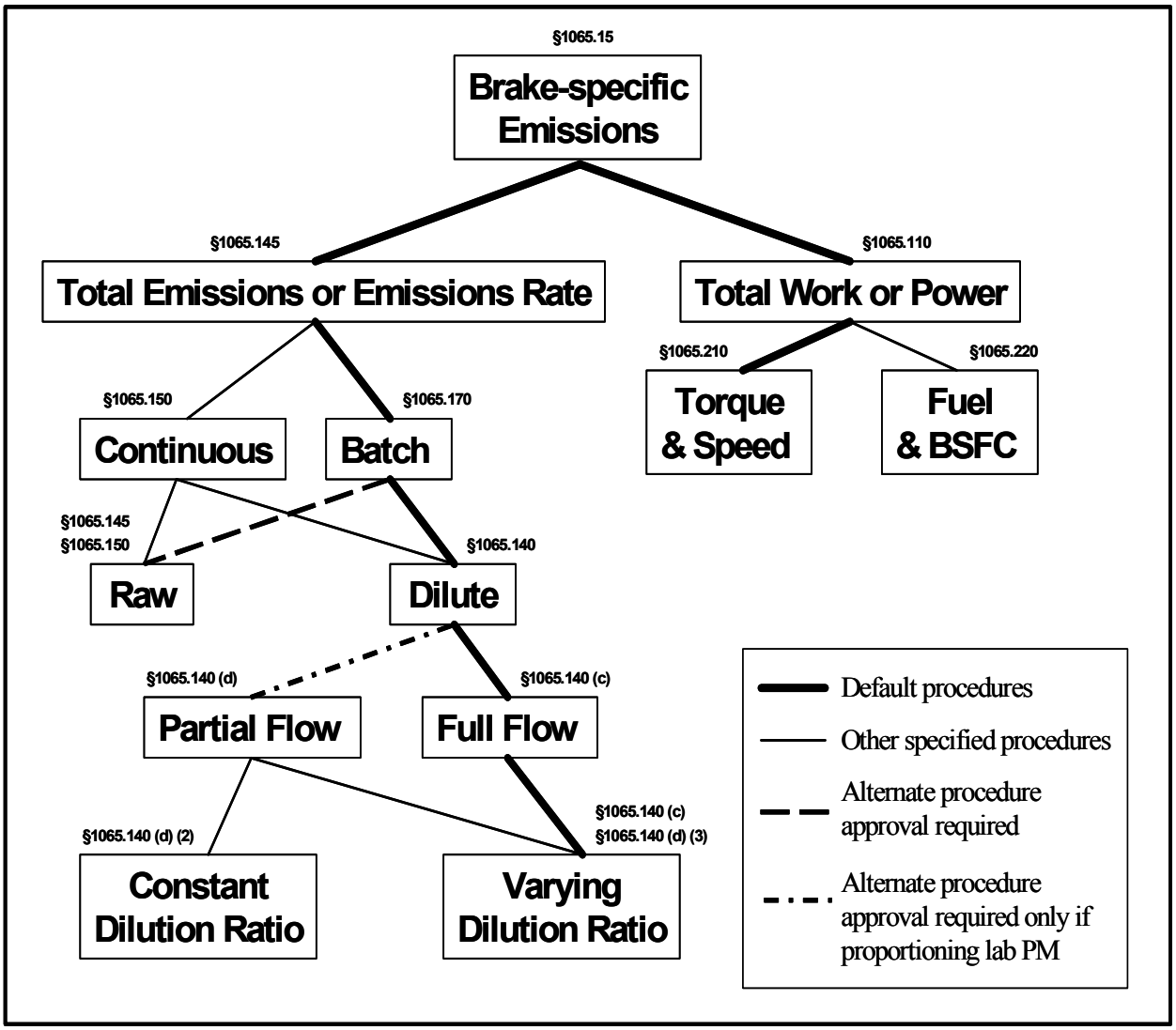

§1065.20 Units of measure and overview of calculations.

(a) System of units. The procedures in this part generally follow the International System of Units (SI), as detailed in NIST Special Publication 811, 1995 Edition, "Guide for the Use of the International System, of Units (SI)," which we incorporate by reference in §1065.1010. This document is available on the Internet at http://physics.nist.gov/Pubs/SP811/contents.html. Note the following exceptions:

(1) We designate rotational frequency of an engine's crankshaft in revolutions per minute (rev/min), rather than the SI unit of reciprocal seconds (1/s). This is based on the commonplace use of rev/min in many engine dynamometer laboratories. Also, we use the symbol f_n to identify rotational frequency in rev/min, rather than the SI convention of using n. This avoids confusion with our usage of the symbol n for a molar quantity.

(2) We designate brake-specific emissions in grams per kilowatt-hour (g/kW·hr), rather than the SI unit of grams per megajoule (g/MJ). This is based on the fact that engines are generally subject to emission standards expressed in g/kW·hr. If we specify engine standards in grams per horsepower·hour (g/hp·hr) in the standard-setting part, convert units as specified in paragraph (d) of this section.

(3) We designate temperatures in units of degrees Celsius (°C) unless a calculation requires an absolute temperature. In that case, we designate temperatures in units of Kelvin (K). For conversion purposes throughout this part, 0 °C equals 273.15 K.

(b) Concentrations. This part does not rely on amounts expressed in parts per million or similar units. Rather, we express such amounts in the following SI units:

(1) For ideal gases, µmol/mol, formerly ppm (volume).

(2) For all substances, $\mu m^3/m^3$, formerly ppm (volume).

(3) For all substances, mg/kg, formerly ppm (mass).

(c) Absolute pressure. Measure absolute pressure directly calculate it as the sum of barometric pressure plus a differential pressure that is referenced to barometric pressure.

(d) Units conversion. Use the following conventions to convert units:

(1) Testing. You may record values and perform calculations with other units. For testing with equipment that involves other units, use the conversion factors from NIST Special Publication 811, as described in paragraph (a) of this section.

(2) Humidity. In this part, we identify humidity levels by specifying dewpoint, which is the temperature at which pure water begins to condense out of air. Use humidity conversions as described in §1065.645.

(3) Emission standards. For engines that are subject to emission standards in other units, see §1065.650 to convert emission results for comparison to emission standards.

(e) Rounding. Round only final values, not intermediate values. Round values based on the number of significant figures necessary to match the applicable standard or specification.

(f) Interpretation of ranges. In this part, we specify ranges such as "±10 % of maximum pressure", "(40 to 50) kPa", or "(30 ±10) kPa". Interpret a range as a tolerance unless we explicitly identify it as an accuracy, repeatability, linearity, or noise specification. See §1065.1001 for the definition of Tolerance.

(g) Scaling of specifications with respect to a standard. Because this part 1065 is applicable to a wide range of engines, some of the specifications in this part are scaled with respect to an engine's emission standard or maximum power. This ensures that the specification will be adequate to determine compliance, but not overly burdensome by requiring unnecessarily high-precision equipment. Many of these specifications are given with respect to a "flow-weighted average" that is expected at the standard. Flow-weighted average means the average of a quantity after it is weighted proportional to a corresponding flow rate. For example, if a gas concentration is measured continuously from the raw exhaust of an engine, its flow-weighted average concentration is the sum of the products of each recorded concentration times its respective exhaust flow rate, divided by the number of recorded values. As another example, the bag concentration from a CVS system is the same as the flow-weighted average concentration, because the CVS system itself flow-weights the bag concentration.

§1065.25 Recordkeeping.
The procedures in this part include various requirements to record data or other information. Refer to the standard-setting part regarding recordkeeping requirements. If the standard-setting part does not specify recordkeeping requirements, store these records in any format and on any media and keep them readily available for one year after you send an associated application for certification, or one year after you generate the data if they do not support an application for certification. You must promptly send us organized, written records in English if we ask for them. We may review them at any time.

Subpart B— Equipment Specifications

§1065.101 Overview.
(a) This subpart specifies equipment, other than measurement instruments, related to emission testing. This includes three broad categories of equipment—dynamometers, engine fluids and systems, and emission-sampling hardware. Figure 1 of §1065.101 illustrates the equipment specified in this subpart.
(b) Other related subparts in this part identify measurement instruments (subpart C), describe how to evaluate the performance of these instruments (subpart D), and specify engine fluids and analytical gases (subpart H).
(c) Subpart J of this part describes additional equipment that is specific to field testing.

Figure 1 of §1065.101—Engine dynamometer laboratory equipment.

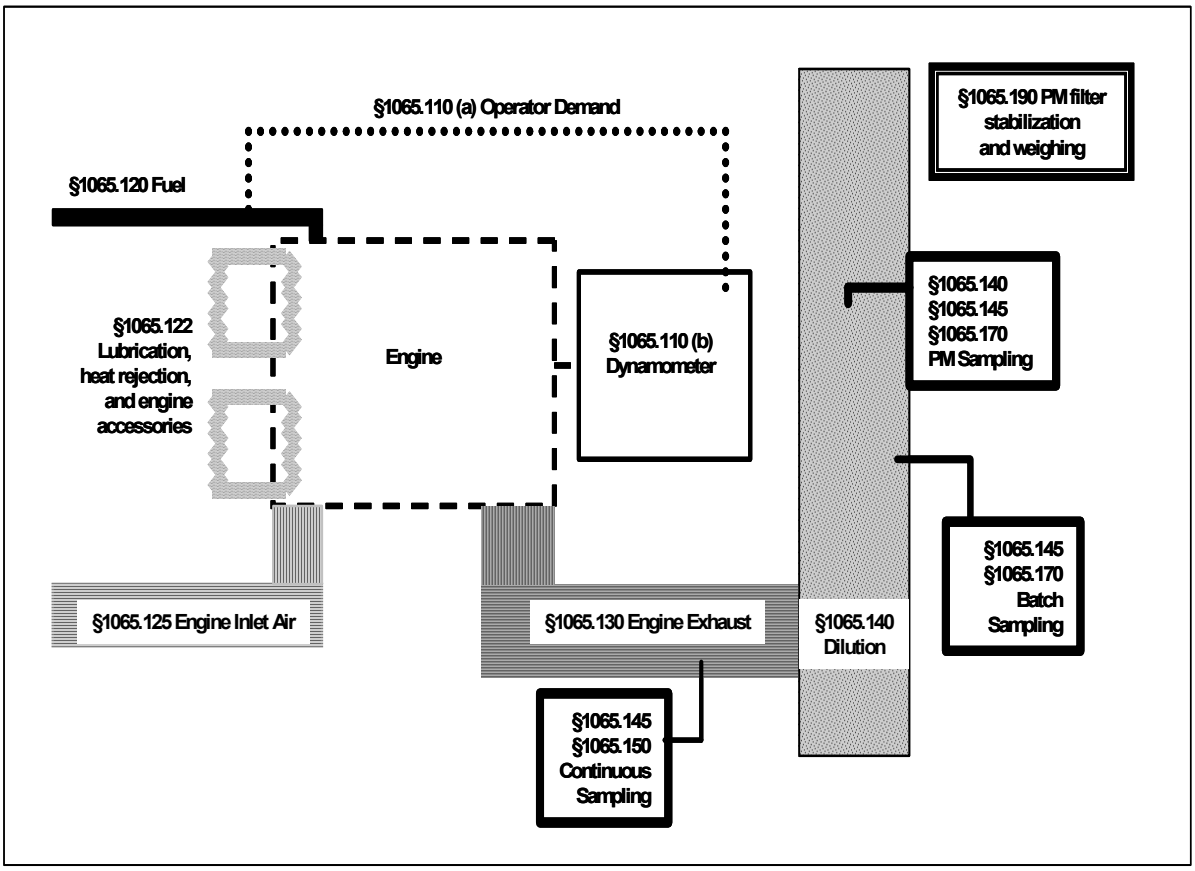

§1065.110 Dynamometers and operator demand.
(a) Dynamometers. Use an engine dynamometer that is able to meet the cycle validation criteria in §1065.514 over each applicable duty cycle.

(1) Eddy-current and water-brake dynamometers may generally be used for any testing that does not involve engine motoring, which is identified by negative torque commands in a duty cycle.

(2) Alternating-current and direct-current motoring dynamometers may generally be used for any type of testing.

(3) A combination of dynamometers may be used in series.

(b) Operator demand. Command the operator demand and the dynamometer to follow the prescribed duty cycle with set points for engine speed and torque at 5 Hz or more frequently. Use a mechanical or electronic input to control operator demand such that the engine is able to meet the validation criteria in §1065.514 over each applicable duty cycle. Record feedback values for engine speed and torque at 5 Hz or more frequently for evaluating performance relative to the cycle validation criteria. Using good engineering judgment, you may improve control of operator demand by altering on-engine speed and torque controls. However, if these changes result in unrepresentative testing, you must notify us and recommend other test procedures under §1065.10(c)(2).

§1065.120 Fuel properties and fuel temperature and pressure.
(a) Use fuels as specified in subpart H of this part.
(b) If the engine manufacturer specifies fuel temperature and pressure tolerances at the inlet to the fuel injection pump or other location, measure this fuel temperature and pressure to show that you stay within the tolerances throughout testing.

§1065.122 Engine fluids, heat rejection, and engine accessories.
(a) Lubricating oil. Use lubricating oils specified in §1065.740.
(b) Engine cooling. Cool the engine during testing so its intake-air, oil, coolant, block, and head temperatures are within their expected ranges for normal operation. Measure temperatures at the manufacturer-specified locations. You may use auxiliary engine fans subject to the provisions of paragraph (c) of this section. For liquid-cooled engines, use coolant as specified in §1065.745.
(c) Engine accessories. You may install or simulate the load of engine accessories required to fuel, lubricate, or heat the engine, circulate coolant to the engine, or to operate aftertreatment devices. Operate the engine with these accessories installed or simulated during all testing operations, including mapping. If these accessories are not powered by the engine during a test, subtract the work required to perform these functions from the total work used in brake-specific emission calculations. Subtract engine-fan work from total work only for air-cooled engines.
(d) Engine starter. You may install a production-type starter.

§1065.125 Engine intake air.
(a) Use the intake-air system installed on the engine or one that represents a typical in-use configuration.
(b) Measure temperature, humidity, and barometric pressure near the entrance to the engine's air filter, or at the inlet to the air intake system for engines that have no air filter. You may use a central laboratory barometer as long as your equipment for handling intake air maintains ambient pressure where you test the engine within 1 % of the central laboratory barometer pressure. You may use a single humidity measurement for intake air from a shared air handler instead of a local intake-air humidity measurement.
(c) Use an air-intake restriction that represents production engines. Make sure the intake-air restriction is between the manufacturer's specified maximum for a clean filter and the manufacturer's specified maximum allowed. Measure this value at the location and at the speed and torque set points specified by the manufacturer. As the manufacturer, you are liable for emission compliance for all values up to the maximum restriction you specify for a particular engine.
(d) If you simulate charge-air cooling, use a laboratory charge-air cooling system with a total intake-air capacity that represents production engines' in-use installation. Maintain coolant conditions as follows:

(1) Maintain a coolant temperature of at least 20 °C at the inlet to the charge-air cooler throughout testing.

(2) At maximum engine power, set the coolant flow rate to achieve an air temperature within ±5 °C of the value specified by the manufacturer at the charge-air cooler outlet. Measure the air-outlet temperature at the location specified by the manufacturer. Use this coolant flow rate throughout testing, unless it prevents you from being able to determine compliance with the applicable standards.

§1065.130 Engine exhaust.

(a) Use the exhaust system installed with the engine or one that represents a typical in-use configuration. This includes any applicable aftertreatment devices. If the exhaust system for testing is not one that is installed with the engine, or if you add a length of exhaust tubing to the installed exhaust system, observe the following specifications:

(1) Position any aftertreatment device so its distance from the nearest exhaust manifold flange or turbocharger outlet is within the range specified by the engine manufacturer in the application for certification. If this distance is not specified, position aftertreatment devices to represent a typical vehicle configuration.

(2) Use exhaust tubing upstream of any aftertreatment device with a diameter that represents a typical in-use configuration. Position each aftertreatment device in the exhaust stream in a way that represents production engines.

(3) Downstream of the outlet of the exhaust manifold, turbocharger or last aftertreatment device, use tubing materials that are smooth-walled, electrically conductive, and not reactive with exhaust constituents. Stainless steel is an acceptable material. Minimize tube lengths. Use thin-walled or air gap-insulated tubing to minimize temperature differences between the wall and the exhaust. You may install short sections of flexible tubing at connection points—up to 20 % of the total length of exhaust tubing.

(b) Use a length of up to 65 diameters of tubing from the outlet of the exhaust manifold, turbocharger or last aftertreatment device to any raw sampling probe or dilution stage. Insulate any length of exhaust tubing beyond the first 25 diameters of length.

(c) You may insert instruments into the exhaust tubing, such as an in-line smoke meter. If you do this, you may leave a length of up to 5 diameters of exhaust tubing uninsulated on each side of each instrument, but you may leave a length of no more than 25 diameters of tubing uninsulated in total, including any lengths adjacent to in-line instruments.

(d) Electrically ground the entire exhaust system.

(e) Unless the standard-setting part specifies otherwise, you may do forced cool-down of aftertreatment devices using good engineering judgment to prepare for cold-start testing. For example, you may set up a system to send cooling air through an aftertreatment system. In this case, good engineering judgment would indicate that you should send cooling air with a temperature of at least 15 °C in the normal direction of exhaust flow, and that you should not start flowing cool air until the aftertreatment system has cooled below its catalytic activation temperature. For platinum group metal catalysts, this temperature is about 200 °C. In no case may you use a cooling procedure that results in unrepresentative emissions (see §1065.10(c)(1)).

(f) Use an exhaust restriction that represents the performance of production engines. Make sure the exhaust restriction is 80 % to 100 % of the maximum exhaust restriction specified by the manufacturer. Measure this value at the location and at the speed and torque set points specified by the manufacturer. As the manufacturer, you are liable for emission compliance for all values up to the maximum restriction you specify for a particular engine.

(g) Route open crankcase emissions directly into the exhaust system for emission measurement, as allowed by the standard-setting part, as follows:

(1) Use tubing materials that are smooth-walled, electrically conductive, and not reactive with crankcase emissions. Stainless steel is an acceptable material. Minimize tube lengths. We also recommend using heated or thin-walled or air gap-insulated tubing to minimize temperature differences between the wall and the crankcase emission constituents. You may install short sections of flexible tubing at connection points—up to 20 % of the total length of crankcase exhaust tubing.

(2) Use a length of crankcase exhaust tubing that does not exceed the length of your engine exhaust tubing. Measure this from the exit of the engine's crankcase system to the point where it enters the raw exhaust tubing.

(3) Minimize the number of bends in the crankcase exhaust tubing and maximize the radius of any unavoidable bend.

(4) Use crankcase exhaust tubing that meets the engine manufacturer's specifications for crankcase back pressure.

(5) Connect the crankcase exhaust tubing into the raw exhaust downstream of any aftertreatment system and downstream of any installed exhaust restriction. Extend the crankcase exhaust tube into the free stream of exhaust to avoid boundary-layer effects and to promote mixing. The crankcase exhaust tube's outlet may be oriented in any direction relative to the raw exhaust flow.

§1065.140 Dilution for gaseous and PM constituents.

(a) General. You may dilute exhaust with ambient air, synthetic air, or nitrogen that is at least 15 °C. Note that the composition of dilution air affects some measurement instruments for gaseous constituents. We recommend diluting exhaust at a location as close as possible to the location where ambient air dilution would occur in use.

(b) Dilution-air conditions and background concentrations. You may precondition the dilution air by increasing or decreasing its temperature or humidity. You may also remove constituents to reduce their background concentrations. The following provisions apply to removing constituents or accounting for background concentrations:

(1) You may measure constituent concentrations in the dilution air and compensate for their background effect on test results. Measure these background concentrations the same way you measure diluted exhaust constituents. See §1065.650 for calculations that compensate for background concentrations.

(2) For measuring PM, we recommend that you filter all dilution air, including primary full-flow dilution air, with high-efficiency particulate air (HEPA) filters. Ensure that HEPA filters are installed properly so that background PM does not leak past the HEPA filters. If you correct for background PM instead of using HEPA filtration, demonstrate that the background PM in the dilution air contributes less than 50 % to the net PM collected.

(c) Full-flow dilution; constant-volume sampling (CVS). You may dilute the full flow of raw exhaust in a dilution tunnel that maintains a nominally constant-volume flow rate of diluted exhaust, as follows:

(1) Construction. Use a tunnel with inside surfaces of 300 series stainless steel. Electrically ground the entire dilution tunnel. We recommend a thin-walled or air gap-insulated dilution tunnel to minimize temperature differences between the wall and the exhaust gases.

(2) Pressure control. Maintain the static pressure in the dilution tunnel within 1 % of the barometric pressure at the location where raw exhaust is introduced into the tunnel. You may use a booster blower to control this pressure. If you show that your engines require more careful pressure control in the dilution tunnel, we will maintain the static pressure of the dilution tunnel within your specification as low as 0.25 % of barometric pressure when we test your engines.

(3) Mixing. Introduce raw exhaust into the tunnel by directing it downstream along the centerline of the tunnel. You may introduce a fraction of dilution air radially from the tunnel's inner surface to minimize exhaust interaction with the tunnel walls. You may configure the system with turbulence generators such as orifice plates or fins to achieve good mixing. We recommend a minimum Reynolds number, $Re^{\#}$ of 4000 for the diluted exhaust stream, where $Re^{\#}$ is based on the diameter of the dilution tunnel. $Re^{\#}$ is defined in §1065.640.

(4) Flow measurement preconditioning. You may condition the diluted exhaust before measuring its total flow rate, as long as this conditioning takes place downstream of any sample probes, as follows:

(i) You may use flow straighteners, pulsation dampeners, or both of these.

(ii) You may use a filter.

(iii) You may use a heat exchanger to control the temperature of the diluted exhaust flow.

(5) Flow measurement. Section 1065.240 describes measurement instruments for diluted exhaust flow.

(6) Aqueous condensation. You may either prevent aqueous condensation throughout the dilution tunnel or you may measure humidity at the flow-measurement inlet. Note that preventing aqueous condensation involves more than keeping pure water in a vapor phase (see §1065.1001). Calculations in §1065.650 account for either method of addressing humidity in the diluted exhaust.

(7) Flow compensation. Maintain nominally constant molar flow of diluted exhaust (in mol/s). Control temperature and pressure at the flow meter or compensate for temperature-related or pressure-related flow

variations by directly controlling the flow of diluted exhaust or by directly controlling the flow of proportional samplers. For an individual test, validate proportional sampling as described in §1065.545.

(d) Partial-flow dilution (PFD). Except as specified in this paragraph (d), you may dilute a partial flow of raw or previously diluted exhaust before measuring emissions. Section 1065.240 describes instrument specifications for PFD-related flow measurement. PFD may consist of constant or varying dilution ratios as described in paragraphs (d)(2) and (3) of this section.

(1) Exceptions. (i) You may not use PFD if the standard-setting part does not allow it.

(ii) You may use PFD for extracting a proportional PM sample for laboratory measurement over transient and ramped-modal duty cycles only if we have explicitly approved it as equivalent to the specified procedure for full-flow CVS under §1065.10. Note that you may generally use PFD to extract a proportional PM sample for laboratory measurement over steady-state duty cycles and for any field-testing measurements.

(2) Constant dilution-ratio PFD. Do one of the following for constant dilution-ratio PFD:

(i) Dilute an already proportional flow. For example, you may do this as a way of performing secondary dilution from a CVS tunnel to achieve temperature control for PM sampling.

(ii) Continuously measure constituent concentrations. For example, you might dilute to precondition a sample of raw exhaust to control its temperature, humidity, or constituent concentrations upstream of continuous analyzers. In this case, you must take into account the PFD dilution ratio before multiplying the continuous concentration by the sampled exhaust flow rate.

(iii) Extract a proportional sample from the constant dilution ratio PFD system. For example, you might use a variable-flow pump to proportionally fill a gaseous storage medium such as a bag from a PFD system. In this case, the proportional sampling must meet the same specifications as varying dilution ratio PFD in paragraph (d)(3) of this section.

(3) Varying dilution-ratio PFD . All the following provisions apply for varying dilution-ratio PFD:

(i) Use a feedback control loop with sensors and actuators that can maintain proportional sampling over intervals as short as 200 ms (i.e., 5 Hz control).

(ii) For feedback input, you may use any continuous sensor output from any measurement, including intake-air flow, fuel flow, exhaust flow, engine speed, or intake manifold temperature and pressure.

(iii) You may use preprogrammed data or time delays if they have been determined for the specific test site, duty cycle, and test engine from which you dilute emissions.

(iv) We recommend that you run practice cycles to meet the validation criteria in §1065.545. You must validate every emission test by meeting the validation criteria with the data from that specific test, not from practice cycles or other tests.

(v) You may not use a PFD system that requires preparatory tuning or calibration with a CVS or with the emission results from a CVS.

(e) Dilution and temperature control of PM samples. Dilute PM samples at least once upstream of transfer lines. You may dilute PM samples upstream of a transfer line via full-flow dilution or via partial-flow dilution immediately downstream of a PM probe. Control sample temperature to (47 ±5) °C, as measured anywhere within 20 cm upstream or downstream of the PM storage media. Measure this temperature with a bare-wire junction thermocouple with wires that are (0.500 ±0.025) mm diameter, or with another suitable instrument that has equivalent performance. Cool the PM sample primarily by dilution.

§1065.145 Gaseous and PM probes, transfer lines, and sampling system components.

(a) Continuous and batch sampling. Determine the total mass of each constituent with continuous or batch sampling, as described in §1065.15(c)(2). Both types of sampling systems have probes, transfer lines, and other sampling system components that are described in this section.

(b) Gaseous and PM sample probes. A probe is the first fitting in a sampling system. It protrudes into a raw or diluted exhaust stream to extract a sample, such that its inside and outside surfaces are in contact with the exhaust. A sample is transported out of a probe into a transfer line, as described in paragraph (c) of this section. The following provisions apply to probes:

(1) Probe design and construction. Use sample probes with inside surfaces of 300 series stainless steel. Locate sample probes where constituents are mixed to their mean sample concentration. Take into account the mixing of any crankcase emissions that may be routed into the raw exhaust. Locate each probe to minimize interference with the upstream flow of other probes. We recommend that all probes remain free from influences of boundary layers, wakes, and eddies—especially near the outlet of a raw-exhaust tailpipe where unintended dilution might occur. Make sure that purging or back-flushing of a probe does not influence another probe during testing. You may use a single probe to extract a sample of more than one constituent as long as the probe meets all the specifications for each constituent.

(2) Gaseous sample probes. Use either single-port or multi-port probes for sampling gaseous emissions. You may orient these probes in any direction. For some probes, you must control sample temperatures, as follows:

(i) For probes that extract NO_x from diluted exhaust, control the probe's wall temperature to prevent aqueous condensation.

(ii) For probes that extract hydrocarbons for NMHC or NMHCE analysis from the diluted exhaust of compression-ignition engines, 2-stroke spark-ignition engines, or 4-stroke spark-ignition engines below 19 kW, maintain a probe wall temperature of (191 ± 11) °C.

(3) PM sample probes. Use PM probes with a single opening at the end. Orient PM probes to face directly upstream. Do not shield a PM probe's opening with a PM pre-classifier such as a hat. We recommend sizing the inside diameter of PM probes to approximate isokinetic sampling at the expected mean flow rate.

(c) Transfer lines. You may use transfer lines to transport an extracted sample from a probe to an analyzer, storage medium, or dilution system. Minimize the length of all transfer lines by locating analyzers, storage media, and dilution systems as close to probes as practical. We recommend that you minimize the number of bends in transfer lines and that you maximize the radius of any unavoidable bend. Avoid using 90° elbows, tees, and cross-fittings in transfer lines. Where such connections and fittings are necessary, take steps, using good engineering judgment, to ensure that you meet the temperature tolerances in this paragraph (c). This may involve measuring temperature at various locations within transfer lines and fittings. You may use a single transfer line to transport a sample of more than one constituent, as long as the transfer line meets all the specifications for each constituent. The following construction and temperature tolerances apply to transfer lines:

(1) Gaseous samples. Use transfer lines with inside surfaces of 300 series stainless steel, PTFE, or Viton™. You may use in-line filters if they do not react with exhaust constituents and if the filter and its housing meet the same temperature requirements as the transfer lines, as follows:

(i) For NO_x transfer lines upstream of an NO_2-to-NO converter, maintain a sample temperature that prevents aqueous condensation.

(ii) For THC transfer lines for testing compression-ignition engines, 2-stroke spark-ignition engines, or 4-stroke spark-ignition engines below 19 kW, maintain a wall temperature throughout the entire line of (191 ±11) °C. If you sample from raw exhaust, you may connect an unheated, insulated transfer line of 300 series stainless steel directly to a probe. Design the length and insulation of the transfer line to cool the highest expected raw exhaust temperature to no lower than 191 °C, as measured at the transfer line's outlet.

(2) PM samples. We recommend heated transfer lines or a heated enclosure to minimize temperature differences between transfer lines and exhaust constituents. Use transfer lines that are inert with respect to PM and are electrically conductive on the inside surfaces. We recommend using PM transfer lines made of 300 series stainless steel. Electrically ground the inside surface of PM transfer lines.

(d) Optional sample-conditioning components for gaseous and PM sampling. You may use the following sample-conditioning components to prepare samples for analysis, as long you do not install or use them in a way that adversely affects your ability to show that your engines comply with all applicable emission standards.

(1) NO_2-to-NO converter. You may use an NO_2-to-NO converter that meets the efficiency-performance check specified in §1065.378 at any point upstream of a NO_x analyzer or storage medium.

(2) Sample dryer. You may use either of the following types of sample dryers to decrease the effects of water on emission measurements; you may not use a chemical dryer:

(i) Osmotic-membrane. You may use an osmotic-membrane dryer upstream of any analyzer or storage medium, as long as it meets the temperature specifications in paragraph (c)(1) of this section. Because

osmotic-membrane dryers may deteriorate after prolonged exposure to certain exhaust constituents, consult with the membrane manufacturer regarding your application before incorporating an osmotic-membrane dryer. Monitor the dewpoint, T_{dew}, and absolute pressure, P_{dew}, downstream of an osmotic-membrane dryer. You may use continuously recorded values of T_{dew} and P_{dew} in the amount of water calculations specified in §1065.645. If you do not continuously record these values, you may use their peak values observed during a test or their alarm setpoints as constant values in the calculations specified in §1065.645. You may also use a nominal P_{dew}, which you may estimate as the dryer's lowest absolute pressure expected during testing.

(ii) Thermal chiller. You may use a thermal chiller upstream of some gaseous constituent analyzers and storage media. You may not use a thermal chiller upstream of a THC measurement system for compression-ignition engines, 2-stroke spark-ignition engines, or 4-stroke spark-ignition engines below 19 kW. If you use a thermal chiller upstream of an NO_2-to-NO converter or in a sampling system without an NO_2-to-NO converter, the chiller must meet the NO_2 loss-performance check specified in §1065.376. Monitor the dewpoint, T_{dew}, and absolute pressure, P_{dew}, downstream of a thermal chiller. You may use continuously recorded values of T_{dew} and P_{dew} in the emission calculations specified in §1065.650. If you do not continuously record these values, you may use their peak values observed during a test or their alarm setpoints as constant values in the amount of water calculations specified in §1065.645. You may also use a nominal P_{dew}, which you may estimate as the dryer's lowest absolute pressure expected during testing. If you can justify assuming the degree of saturation in the thermal chiller, you may calculate T_{dew} based on the known chiller efficiency and continuous monitoring of chiller temperature, $T_{chiller}$. If you do not continuously record values of $T_{chiller}$, you may use its peak value observed during a test, or its alarm setpoint, as a constant value to determine a constant amount of water according to §1065.645. If you can justify that $T_{chiller}$ is equal to T_{dew}, you may use $T_{chiller}$ in lieu of T_{dew} according to §1065.645.

(3) Sample pumps. You may use sample pumps upstream of an analyzer or storage medium for any gaseous constituent. Use sample pumps with inside surfaces of 300 series stainless steel or PTFE. For some sample pumps, you must control temperatures, as follows:

(i) You may use a NO_x sample pump upstream of an NO_2-to-NO converter if it is heated to prevent aqueous condensation.

(ii) For testing compression-ignition engines, 2-stroke spark-ignition engines, or 4-stroke compression ignition engines below 19 kW, you may use a THC sample pump upstream of a THC analyzer or storage medium if its inner surfaces are heated to (191 ±11) °C

(4) PM sample conditioning components. You may condition PM samples to minimize positive and negative biases to PM results, as follows:

(i) You may use a PM preclassifier to remove large-diameter particles. The PM preclassifier may be either an inertial impactor or a cyclonic separator. It must be constructed of 300 series stainless steel. The preclassifier must be rated to remove at least 50 % of PM at an aerodynamic diameter of 10 µm and no more than 1 % of PM at an aerodynamic diameter of 1 µm over the range of flow rates that you use it. Follow the preclassifier manufacturer's instructions for any periodic servicing that may be necessary to prevent a buildup of PM. Install the preclassifier in the dilution system downstream of the last dilution stage. Configure the preclassifier outlet with a means of bypassing any PM sample media so the preclassifier flow may be stabilized before starting a test. Locate PM sample media within 50 cm downstream of the preclassifier's exit.

(ii) You may request to use other PM conditioning components upstream of a PM preclassifier, such as components that condition humidity or remove gaseous-phase hydrocarbons. You may use such components only if we approve them under §1065.10.

§1065.150 Continuous sampling.

You may use continuous sampling techniques for measurements that involve raw or dilute sampling. Connect continuous analyzers directly to probes or transfer lines. Make sure continuous analyzers meet the specifications in subpart C of this part. Because continuous concentration measurements must be multiplied by continuous flow measurements, use good engineering judgment to account for time delays and dispersion as described in §1065.201.

§1065.170 Batch sampling for gaseous and PM constituents.
You may use batch-sampling techniques for measurements that involve dilute sampling. You may use batch-sampling techniques for raw sampling only if we approve it as an alternative procedure under §1065.10.
(a) Sampling methods. For batch sampling, extract the sample at a rate proportional to the exhaust flow. If you extract from a constant-volume flow rate, sample at a constant-volume flow rate. If you extract from a varying flow rate, vary the sample rate in proportion to the varying flow rate. Validate proportional sampling after an emission test as described in §1065.545. Use storage media that do not artificially increase or decrease measured emission levels.
(b) Gaseous sample storage media. Store gas volumes in clean containers that do not off-gas emissions or allow permeation of CO_2 or any other exhaust emissions through the material. To clean a container, you may repeatedly purge and evacuate a container and you may heat it. You may use a super-critical CO_2 extraction technique to evaluate container materials for CO_2 permeability. Use containers meeting the following specifications:

(1) You may store gas volumes in Tedlar™ or Kynar™ containers (such as bags) up 40 °C for analyzing CO, CO_2, O_2, CH_4, C_2H_6, C_3H_8 and NO_x, as long as you prevent aqueous condensation. For testing engines other than compression-ignition engines, two-stroke spark-ignition engines, or 4-stroke engines below 19 kW, you may also store THC in these containers. You may request to use other container materials under §1065.10.

(2) You may store gas volumes using containers with inside surfaces of 300 series stainless steel or PTFE at (191 ±11) °C for analysis of any gaseous constituent. You may use a flexible volume within a heated chamber, or you may use a heated, rigid container that is initially evacuated or has a volume that can be displaced, such as a piston and cylinder arrangement.

(c) PM sample media. For measuring PM to show that engines meet an emission standard below 0.05 g/kW·hr, collect PM mass at a minimum efficiency of 99.7 %. If the applicable PM standard is at or above 0.05 g/kW·hr, collect PM mass at a minimum efficiency of 98 %. Demonstrate PM collection efficiency using ASTM D 2986-95a (incorporated by reference in §1065.1010). Apply the following methods for sampling particulate emissions:

(1) If you use filter-based sampling media to extract and store PM for measurement, it must have the following specifications:

(i) It must be circular, with an overall diameter of 46.50 ± 0.6 mm, have an exposed diameter of at least 38 mm, and have a thickness at the sealing portions of the filter cassette of 0.4 ±0.05 mm. See the cassette specifications in paragraph (c)(1)(v) of this section.

(ii) For measuring PM to show that engines meet an emission standard below 0.05 g /kW·hr, use a PTFE filter material that does not have any flow-through support bonded to the back and has an overall thickness of 40 ±20 mm. An inert polymer ring may be bonded to the periphery of the filter material for support and for sealing between the filter cassette parts. We consider Polymethylpentene (PMP) an inert material for a support ring, but other inert materials may be used. See the cassette specifications in paragraph (c)(1)(v) of this section. If the applicable PM standard is at or above 0.05 g/kW·hr, you may use PTFE or PTFE-coated glass fiber filter material.

(iii) To minimize turbulent deposition and to deposit PM evenly on a filter, use a 12.5 ° (from center) divergent cone angle to transition from the transfer-line inside diameter to the exposed diameter of the filter face. Use 300 series stainless steel for this transition.

(iv) Maintain sample velocity at the filter face at or below 100 cm/s, where filter face velocity is the measured volumetric flow rate of the sample at the pressure and temperature upstream of the filter face, divided by the filter's exposed area.

(v) Use a clean cassette designed to the specifications of Figure 1 of §1065.170 and made of one of the following materials: Delrin™, 300 series stainless steel, polycarbonate, acrylonitrile-butadiene-styrene (ABS) resin, or conductive polypropylene. Use a material that is inert to any solvents or detergents that you use to periodically clean the filter holder and screen. We recommend that you periodically clean the filter cassette and screen with a solvent such as ethanol (C_2H_5OH). Your cleaning frequency will depend on your engine's PM and HC emissions.

(vi) If you store filters in cassettes in an automatic PM sampler, cover or seal individual filter cassettes after sampling to prevent communication of semi-volatile matter from one filter to another.

(2) You may use other PM sample media that we approve under §1065.10, including non-filtering techniques. For example, you might deposit PM on an inert, nonporous substrate that collects PM via electrostatic, thermophoresis, inertia, diffusion, or some other deposition mechanism, as approved.

(3) When we test your engines, we will use the same PM sample media that you used for testing comparable engines.

Figure 1 of §1065.170—PM filter cassette specifications.

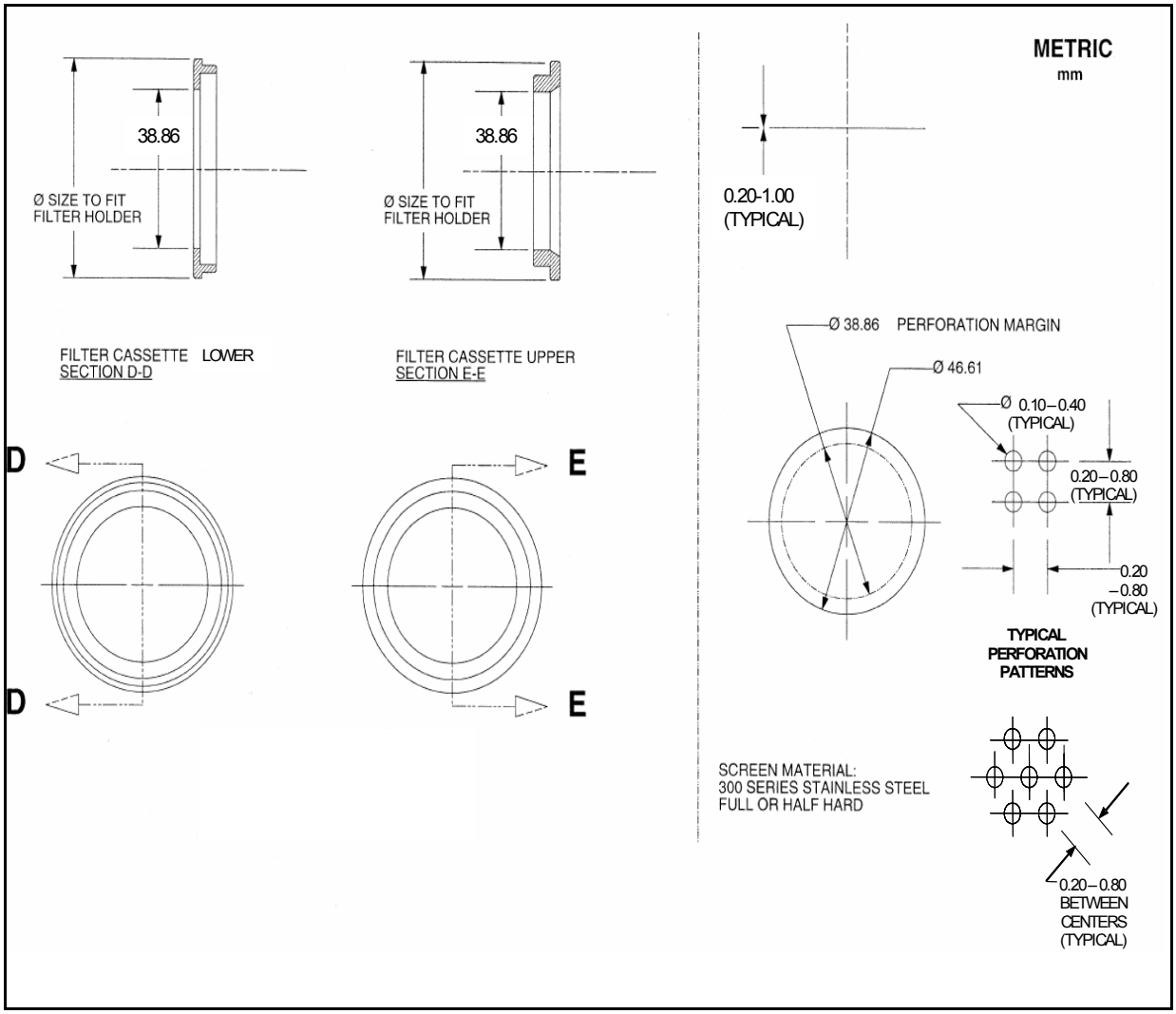

§1065.190 PM-stabilization and weighing environments for gravimetric analysis.

(a) This section describes the environments required to weigh PM (i.e., gravimetric analysis). This includes a PM-stabilization environment and a balance environment. The two environments may share a common space. These volumes may be rooms in which PM is weighed, or they may be much smaller, such as a glove box or an automated weighing system consisting of one or more countertop-sized environments.

(b) Keep the PM-stabilization and balance environments free of ambient contaminants, such as dust, aerosols, or semi-volatile material that could contaminate PM samples, as follows:

(1) We recommend that these environments conform with an "as-built" Class Six clean room specification under ISO 14644-1 (incorporated by reference in §1065.1010); however, we also recommend that you deviate from ISO 14644-1 as necessary to minimize air motion that might affect balance stability. We recommend maximum air-supply and air-return velocities of 0.05 m/s in the balance environment.

(2) Monitor the cleanliness of the PM-stabilization environment using reference filters, as described in §1065.390(b).

(c) Maintain the following ambient conditions:

(1) Ambient temperature. Maintain the balance environment at (22 ±1) °C. If the two environments share a common space, maintain both environments at (22 ±1) °C. If they are separate, maintain the PM-stabilization environment at (22 ±3) °C.

(2) Dewpoint. Maintain a dewpoint of 9.5 °C. This dewpoint will control the amount of water associated with sulfuric acid (H_2SO_4) PM, such that 1.1368 µg of water will be associated with each µg of H_2SO_4.

(3) Dewpoint tolerance. If the expected fraction of sulfuric acid in PM is unknown, we recommend controlling dewpoint at within ± 1 °C. This would limit any dewpoint-related change in PM to less than ± 2 %, even for PM that is 50 % sulfuric acid. If you know your expected fraction of sulfuric acid in PM, we recommend that you select an appropriate dewpoint tolerance for showing compliance with emission standards using the following table as a guide:

Table 1 of §1065.190—Dewpoint tolerance
as a function of % PM change and % sulfuric acid PM

Expected sulfuric acid fraction of PM	±0.5 % PM mass change	±1.0 % PM mass change	±2.0 % PM mass change
5 %	±3.0 °C	±6.0 °C	±12 °C
50 %	±0.30 °C	±0.60 °C	±1.2 °C
100 %	±0.15 °C	±0.30 °C	±0.60 °C

(d) Measure the following ambient conditions using measurement instruments that meet the specifications in subpart C of this part:

(1) Continuously measure dewpoint and ambient temperature. Use these values to determine if the PM-stabilization and balance environments have remained within the tolerances specified in paragraph (c) of this section. We recommend that you provide an interlock that automatically prevents the balance from reporting values if either of the environments have not been within the applicable tolerances for the past 30 min.

(2) Continuously measure barometric pressure. Provide a means to record the most recent barometric pressure when you weigh each PM sample. Use this value to calculate the PM buoyancy correction in §1065.690.

(e) We recommend that you install a balance as follows:

(1) Install the balance on a vibration-isolation platform to isolate it from external noise and vibration.

(2) Shield the balance from convective airflow with a static-dissipating draft shield that is electrically grounded.

(3) Follow the balance manufacturer's specifications for all preventive maintenance.

(4) Operate the balance manually or as part of an automated weighing system.

(f) Minimize static electric charge in the balance environment, as follows:

(1) Electrically ground the balance.

(2) Use 300 series stainless steel tweezers if PM samples must be handled manually.

(3) Ground tweezers with a grounding strap, or provide a grounding strap for the operator such that the grounding strap shares a common ground with the balance. Make sure grounding straps have an appropriate resistor to protect operators from accidental shock.

(4) Provide a static-electricity neutralizer that is electrically grounded in common with the balance to remove static charge from PM samples, as follows:

(i) You may use radioactive neutralizers such as a Polonium (^{210}Po) source. Replace radioactive sources at the intervals recommended by the neutralizer manufacturer.

(ii) You may use other neutralizers, such as a corona-discharge ionizer. If you use a corona-discharge ionizer, we recommend that you monitor it for neutral net charge according to the ionizer manufacturer's recommendations.

(5) We recommend that you use a device to monitor the static charge of PM sample media surfaces.

§1065.195 PM-stabilization environment for in-situ analyzers.

(a) This section describes the environment required to determine PM in-situ. For in-situ analyzers, such as an inertial balance, this is the environment within a PM sampling system that surrounds the PM sample media. This is typically a very small volume.

(b) Maintain the environment free of ambient contaminants, such as dust, aerosols, or semi-volatile material that could contaminate PM samples. Filter all air used for stabilization with HEPA filters. Ensure that HEPA filters are installed properly so that background PM does not leak past the HEPA filters.

(c) Maintain the following thermodynamic conditions within the environment before measuring PM:

(1) Ambient temperature. Select a nominal ambient temperature, T_{amb} between (42 and 52) °C. Maintain the ambient temperature within ±1 °C of the selected nominal value.

(2) Dewpoint. Select a dewpoint, T_{dew} that corresponds to T_{amb} such that $T_{dew} = (0.95 \cdot T_{amb} - 11.40)$ °C. The resulting dewpoint will control the amount of water associated with sulfuric acid (H_2SO_4) PM, such that 1.1368 grams of water will be associated with each gram of H_2SO_4. For example, if you select a nominal ambient temperature of 47 °C, set a dewpoint of 33.3 °C.

(3) Dewpoint tolerance. If the expected fraction of sulfuric acid in PM is unknown, we recommend controlling dewpoint within ± 1 °C. This would limit any dewpoint-related change in PM to less than ± 2 %, even for PM that is 50 % sulfuric acid. If you know your expected fraction of sulfuric acid in PM, we recommend that you select an appropriate dewpoint tolerance for showing compliance with emission standards using the following table as a guide:

Table 1 of §1065.190—Dewpoint tolerance
as a function of % PM change and % sulfuric acid PM

Expected sulfuric acid fraction of PM	±0.5 % PM mass change	±1.0 % PM mass change	±2.0 % PM mass change
5 %	±3.0 °C	±6.0 °C	±12 °C
50 %	±0.30 °C	±0.60 °C	±1.2 °C
100 %	±0.15 °C	±0.30 °C	±0.60 °C

(4) Absolute pressure. Maintain an absolute pressure of (80.000 to 103.325) kPa. Use good engineering judgment to maintain a more stringent tolerance of absolute pressure if your PM measurement instrument requires it.

(d) Continuously measure dewpoint, temperature, and pressure using measurement instruments that meet the specifications in subpart C of this part. Use these values to determine if the stabilization environment is within the tolerances specified in paragraph (c) of this section. Do not use any PM quantities that are recorded when any of these parameters exceed the applicable tolerances.

(e) If you use an inertial PM balance, we recommend that you install it as follows:

(1) Isolate the balance from any external noise and vibration that is within a frequency range that could affect the balance.

(2) Follow the balance manufacturer's specifications.

(f) If static electricity affects an inertial balance, you may use a static neutralizer, as follows:

(1) You may use a radioactive neutralizer such as a Polonium (^{210}Po) source or a Krypton (^{85}Kr) source. Replace radioactive sources at the intervals recommended by the neutralizer manufacturer.

(2) You may use other neutralizers, such as a corona-discharge ionizer. If you use a corona-discharge ionizer, we recommend that you monitor it for neutral net charge according to the ionizer manufacturer's recommendations.

(5) We recommend that you use a device to monitor the static charge of PM sample media surfaces.

Subpart C— Measurement Instruments

§1065.201 Overview and general provisions.

(a) Scope. This subpart specifies measurement instruments and associated system requirements related to emission testing. This includes instruments for measuring engine parameters, ambient conditions, flow-related parameters, and emission concentrations.

(b) Instrument types. You may use any of the specified instruments as described in this subpart to perform emission tests. If you want to use one of these instruments in a way that is not specified in this subpart, or if you want to use a different instrument, you must first get us to approve your alternate procedure under §1065.10. Where we specify more than one instrument for a particular measurement, we identify which instrument serves as the reference for showing that an alternative procedure is equivalent to the specified procedure.

(c) Measurement systems. Assemble a system of measurement instruments that allows you to show that your engines comply with the applicable emission standards, using good engineering judgment. When selecting instruments, consider how conditions such as vibration, temperature, pressure, humidity, viscosity, specific heat, and exhaust composition (including trace concentrations) may affect instrument compatibility and performance.

(d) Redundant systems. For all measurement instruments described in this subpart, you may use data from multiple instruments to calculate test results for a single test. If you use redundant systems, use good engineering judgment to use multiple measured values in calculations or to disregard individual measurements. Note that you must keep your results from all measurements, as described in §1065.25.

(e) Range. You may use an instrument's response above 100 % of its operating range if this does not affect your ability to show that your engines comply with the applicable emission standards. Note that we require additional testing and reporting if an analyzer responds above 100 % of its range. See §1065.550. Auto-ranging analyzers do not require additional testing or reporting.

(f) Dispersion. For transient emission tests with continuous sampling where continuous signals from two or more instruments are combined in emission calculations, use dispersion to align the signals if the fastest instrument has a response time less than 75 % of the slowest and at least one instrument has a response time greater than 1 s. Perform

dispersion according to SAE 2001-01-3536 (incorporated by reference in §1065.1010). Steady-state emission tests and any tests with batch sampling systems do not require dispersion. You may disperse data during or after data collection, but if you use time-alignment as described in paragraph (g) of this section, always perform dispersion before time-alignment.

(g) Time-alignment. For transient emission tests with continuous sampling where continuous signals from two or more instruments are combined in emission calculations, time-align their signals to account for measurement system delays. Steady-state emission tests and any tests with batch sampling systems do not require time-alignment. You may time-align data during or after data collection, but if you use dispersion as described in paragraph (f) of this section, always perform dispersion before time-alignment. Time-align data to the nearest recorded interval. An example of time-alignment is shifting a series of concentration measurements to coincide with their respective exhaust flow measurements to account for a transport delay in a sample line.

(h) Related subparts for laboratory testing. Subpart D of this part describes how to evaluate the performance of the measurement instruments in this subpart. Other related subparts in this part identify specifications for other types of equipment (subpart B), and specify engine fluids and analytical gases (subpart H).

(i) Field testing. Subpart J of this part describes how to use these and other measurement instruments for field testing.

§1065.202 Data recording and control.

Your test system must be able to record data and control systems related to operator demand, the dynamometer, sampling equipment, and measurement instruments. Use data acquisition and control systems that can record at the specified minimum frequencies, as follows:

Table 1 of §1065.202–Data recording and control minimum frequencies

Applicable Section	Measured Values	Minimum Frequency
§1065.510	Speed and torque during a an engine step-map	1 mean value per step
§1065.510	Speed and torque during an engine sweep-map	1 Hz averages of 5 Hz samples
§1065.514 §1065.530	Duty cycle reference and feedback speeds and torques for control and recording	5 Hz
§1065.520 §1065.530 §1065.550	Continuous concentrations of raw or dilute analyzers	1 Hz
§1065.520 §1065.530 §1065.550	Batch concentrations of raw or dilute analyzers	1 mean value per test interval
§1065.530 §1065.545	Diluted exhaust flow rate from a CVS with a heat exchanger	1 Hz
§1065.530 §1065.545	Diluted exhaust flow rate from a CVS without a heat exchanger	5 Hz
§1065.530 §1065.545	Intake-air, dilution-air, or raw-exhaust flow rate	5 Hz

§1065.530 §1065.545	Sample flow from a CVS that has a heat exchanger	1 Hz
§1065.530 §1065.545	Sample flow from a CVS does not have a heat exchanger	5 Hz

§1065.205 Performance specifications for measurement instruments.

Your test system as a whole must meet all the applicable calibrations, performance checks, and test-validation criteria specified in subparts D and F of this part (and subpart J of this part for field testing). We recommend that you take the following steps to ensure that your test system performs adequately:

(a) Meet the specifications for individual measurement instruments in Table 1 of this section . For instruments with multiple ranges, this applies to all the ranges you use for testing. The accuracy specifications represent deviations from a true value or a calibration-standard value.

(b) Sample and record the quantity at the rate specified in Table 1 of this section if your instrument meets the rise time and fall time in the table. Note that §1065.308 requires that the product of the rise time and the frequency to be 5 or greater for continuous-analyzer systems.

(c) Keep any documentation from instrument manufacturers showing that instruments meet specifications.

Table 1 of §1065.205–Recommended performance specifications for measurement instruments

Measurement Instrument	Measured quantity symbol	Complete System Rise time and Fall time	Recording update frequency	Accuracy[a]	Repeatability[a]	Noise[a]
Engine speed transducer	f_n	1 s	5 Hz	2.0 % of pt. or 0.5 % of max.	1.0 % of pt. 0.25 % of max.	0.05 % of max
Engine torque transducer	T	1 s	5 Hz	2.0 % of pt. or 1.0 % of max.	1.0 % of pt. 0.5 % of max	0.05 % of max.
General pressure transducer (not a part of another instrument)	p	5 s	1 Hz	2.0 % of pt. or 1.0 % of max.	1.0 % of pt. 0.50 % of max.	0.1 % of max
Barometer	p_{barom}	50 s	0.1 Hz	50 Pa	25 Pa	5 Pa
Temperature sensor for PM-stabilization and balance environments	T	50 s	0.1 Hz	0.25 °C	0.1 °C	0.02 °C
Other temperature sensor (not a part of another instrument)	T	5 s	1 Hz	2 °C	1 °C	0.2 °C
Dewpoint sensor for PM-stabilization and balance environments	T_{dew}	50 s	0.1 Hz	0.25 °C	0.1 °C	0.02 °C
Other dewpoint sensor	T_{dew}	50 s	0.1 Hz	1 °C	0.5 °C	0.1 °C
Fuel flow meter (Fuel totalizer in parentheses)	$\dot{m}$	5 s (N/A)	1 Hz (N/A)	2.0 % of pt. or 1.5 % of max.	1.0 % of pt. 0.75 % of max.	0.5 % of max.
Diluted exhaust meter	$\dot{n}$	5 s	1 Hz	2.0 % of pt. or 1.5 % of max.	1.0 % of pt. 0.75 % of max.	1.0 % of max.
Dilution air, inlet air, exhaust, and sample flow meters	$\dot{n}$	1 s	5 Hz	2.5 % of pt. or 1.5 % of max.	1.25 % of pt. 0.75 % of max.	1.0 % of max.
Constituent concentration, continuous analyzer	x	5 s	1 Hz	2.0 % of pt. 2.0 % of meas.	1.0 % of pt. 1.0 % of meas.	0.2 % of max.
Constituent concentration, batch analyzer	x	N/A	N/A	2.0 % of pt. 2.0 % of meas.	1.0 % of pt. 1.0 % of meas.	0.2 % of max.
Gravimetric PM balance	m_{PM}	N/A	N/A	See §1065.790	0.25 µg	0.1 µg
Inertial PM balance	m_{PM}	5 s	1 Hz	2.0 % of pt. 2.0 % of meas.	1.0 % of pt. 1.0 % of meas.	0.2 % of max.

[a] Accuracy, repeatability, and noise are determined with the same collected data, as described in §1065.305. "pt." refers to a single point at the average value expected during testing at the standard—the reference value used in §1065.305; "max." refers to the maximum value expected during testing at the standard over any test interval, not the maximum of the instrument's range; "meas" refers to the flow-weighted average measured value during any test interval.

MEASUREMENT OF ENGINE PARAMETERS AND AMBIENT CONDITIONS

§1065.210 Speed and torque transducers.

(a) Application. Use instruments as specified in this section to measure engine speed and torque during engine operation.

(b) Component requirements. We recommend that you use speed and torque transducers that meet the specifications in Table 1 of §1065.205. Note that your overall systems for measuring engine speed and torque must meet the linearity checks in §1065.307.

(c) Speed. Use a magnetic or optical shaft-position detector with a resolution of at least 6° arc, in combination with a frequency counter that rejects common-mode noise.

(d) Torque. You may use a variety of methods to determine engine torque. As needed, and based on good engineering judgment, compensate for torque induced by the inertia of accelerating and decelerating components connected to the flywheel, such as the drive shaft and dynamometer rotor. Use any of the following methods to determine engine torque:

(1) Measure torque by mounting a strain gage in-line between the engine and dynamometer.

(2) Measure torque by mounting a strain gage on a lever arm connected to the dynamometer housing.

(3) Calculate torque from internal dynamometer signals, such as armature current, as long as you calibrate this measurement as described in §1065.310.

§1065.215 Pressure transducers, temperature sensors, and dewpoint sensors.

(a) Application. Use instruments as specified in this section to measure pressure, temperature, and dewpoint.

(b) Component requirements. We recommend that you use pressure transducers and temperature and dewpoint sensors that meet the specifications in Table 1 of §1065.205. Note that your overall systems for measuring pressure, temperature, and dewpoint must meet the calibration and performance checks in §1065.315.

(c) Temperature. For PM-balance environments or other precision temperature measurements, we recommend thermistors. For other applications we recommend thermocouples that are not grounded to the thermocouple sheath. You may use other temperature sensors, such as resistive temperature detectors (RTDs).

(d) Pressure. Pressure transducers must control their internal temperature or compensate for temperature changes over their expected operating range. Transducer materials must be compatible with the fluid being measured. For barometric pressure or other precision pressure measurements, we recommend either capacitance-type or laser-interferometer transducers. For other applications, we recommend either strain gauge or capacitance-type pressure transducers. You may use other pressure-measurement instruments, such as manometers, where appropriate.

(e) Dewpoint. For PM-stabilization environments, we recommend chilled-surface hygrometers. For other applications, we recommend thin-film capacitance sensors. You may use other dewpoint sensors, such as a wet-bulb/dry-bulb psychrometer, where appropriate.

FLOW-RELATED MEASUREMENTS

§1065.220 Fuel flow meter.

(a) Application. You may use fuel flow in combination with a chemical balance of carbon (or oxygen) between the fuel, inlet air, and raw exhaust to calculate raw exhaust flow as described in §1065.650, as follows:

(1) Use the actual value of calculated raw exhaust flow rate in the following cases:

(i) For multiplying raw exhaust flow rate with continuously sampled concentrations.

(ii) For multiplying total raw exhaust flow with batch-sampled concentrations.

(2) In the following cases, you may use a signal that does not give the actual value of raw exhaust, as long as it is linearly proportional to the exhaust flow rate's actual calculated value:

(i) For feedback control of a proportional sampling system, such as a partial-flow dilution system.

(ii) For multiplying with continuously sampled constituent concentrations, if the same signal is used in a chemical-balance calculation to determine work from brake-specific fuel consumption and fuel consumed.

(b) Component requirements. We recommend that you use a fuel flow meter that meets the specifications in Table 1 of §1065.205. We recommend a fuel flow meter that measures mass directly, such as one that relies on gravimetric or inertial measurement principles. This may involve using a meter with one or more scales for weighing fuel or using a Coriolis meter. Note that your overall system for measuring fuel flow must meet the linearity check in §1065.307 and the calibration and performance checks in §1065.320.

(c) Recirculating fuel. In any fuel-flow measurement, account for any fuel that bypasses the engine or returns from the engine to the fuel storage tank.

(d) Flow conditioning. For any type of fuel flow meter, condition the flow if needed to prevent wakes, eddies, circulating flows, or flow pulsations from affecting the accuracy or repeatability of the meter. You may accomplish this by using a sufficient length of straight tubing (such as a length equal to 10 pipe diameters) or by using specially designed tubing bends, orifice plates or straightening fins to establish a predictable velocity profile upstream of the meter.

§1065.225 Intake-air flow meter.

(a) Application. You may use an intake-air flow meter in combination with a chemical balance of carbon (or oxygen) between the fuel, inlet air, and raw exhaust to calculate raw exhaust flow as described in §1065.650, as follows:

(1) Use the actual value of calculated raw exhaust in the following cases:

(i) For multiplying raw exhaust flow rate with continuously sampled concentrations.

(ii) For multiplying total raw exhaust flow with batch-sampled concentrations.

(2) In the following cases, you may use a signal that does not give the actual value of raw exhaust, as long as it is linearly proportional to the exhaust flow rate's actual calculated value:

(i) For feedback control of a proportional sampling system, such as a partial-flow dilution system.

(ii) For multiplying with continuously sampled constituent concentrations, if the same signal is used in a chemical-balance calculation to determine work from brake-specific fuel consumption and fuel consumed.

(b) Component requirements. We recommend that you use an intake-air flow meter that meets the specifications in Table 1 of §1065.205. This may include a laminar flow element, an ultrasonic flow meter, a subsonic venturi, a thermal-mass meter, an averaging Pitot tube, or a hot-wire anemometer. Note that your overall system for measuring intake-air flow must meet the linearity check in §1065.307 and the calibration in §1065.325.

(c) Flow conditioning. For any type of intake-air flow meter, condition the flow if needed to prevent wakes, eddies, circulating flows, or flow pulsations from affecting the accuracy or repeatability of the meter. You may accomplish this by using a sufficient length of straight tubing (such as a length equal to 10 pipe diameters) or by using specially designed tubing bends, orifice plates or straightening fins to establish a predictable velocity profile upstream of the meter.

§1065.230 Raw exhaust flow meter.

(a) Application. You may use measured raw exhaust flow, as follows:

(1) Use the actual value of calculated raw exhaust in the following cases:

(i) Multiply raw exhaust flow rate with continuously sampled concentrations.

(ii) Multiply total raw exhaust with batch sampled concentrations.

(2) In the following cases, you may use a signal that does not give the actual value of raw exhaust, as long as it is linearly proportional to the exhaust flow rate's actual calculated value:

(i) For feedback control of a proportional sampling system, such as a partial-flow dilution system.

(ii) For multiplying with continuously sampled constituent concentrations, if the same signal is used in a chemical-balance calculation to determine work from brake-specific fuel consumption and fuel consumed.

(b) Component requirements. We recommend that you use a raw-exhaust flow meter that meets the specifications in Table 1 of §1065.205. This may involve using an ultrasonic flow meter, a subsonic venturi, an averaging Pitot tube, a hot-wire anemometer, or other measurement principle. This would generally not involve a laminar flow element or a thermal-mass meter. Note that your overall system for measuring raw exhaust flow must meet the linearity check in §1065.307 and the calibration and performance checks in §1065.330.

(c) Flow conditioning. For any type of raw exhaust flow meter, condition the flow if needed to prevent wakes, eddies, circulating flows, or flow pulsations from affecting the accuracy or repeatability of the meter. You may accomplish this by using a sufficient length of straight tubing (such as a length equal to 10 pipe diameters) or by using specially designed tubing bends, orifice plates or straightening fins to establish a predictable velocity profile upstream of the meter.

(d) Exhaust cooling. You may cool raw exhaust upstream of a raw-exhaust flow meter, as long as you observe all the following provisions:

(1) Do not sample PM downstream of the cooling device.

(2) Do not sample NMHC downstream of the cooling device for compression-ignition engines, 2-stroke spark-ignition engines, and 4-stroke spark ignition engines below 19 kW if it causes exhaust temperatures above 202 °C to decrease to below 180 °C.

(3) Do not sample NO_x downstream of the cooling device if it causes aqueous condensation.

(4) If cooling causes aqueous condensation before the flow reaches the raw-exhaust flow meter, measure dewpoint and pressure at the flow meter's inlet. Use this dewpoint for emission calculations in §1065.650.

§1065.240 Dilution air and diluted exhaust flow meters.

(a) Application. Use a diluted exhaust flow meter to determine instantaneous diluted exhaust flow rates or total diluted exhaust flow over a test interval. You may use the difference between a diluted exhaust flow meter and a dilution air meter to calculate raw exhaust flow rates or total raw exhaust flow over a test interval.

(b) Component requirements. We recommend that you use a diluted exhaust flow meter that meets the specifications in Table 1 of §1065.205. Note that your overall system for measuring diluted exhaust flow must meet the linearity check in §1065.307 and the calibration and performance checks in §1065.340 and §1065.341. You may use the following meters:

(1) For constant-volume sampling (CVS) of the total flow of diluted exhaust, you may use a critical-flow venturi (CFV), a positive-displacement pump (PDP), a subsonic venturi (SSV), or an ultrasonic flow meter (UFM). Combined with an upstream heat exchanger, either a CFV or a PDP will also function as a passive flow controller in a CVS system. However, you may also combine any flow meter with any active flow control system to maintain proportional sampling of exhaust constituents. You may control the total flow of diluted exhaust, or one or more sample flows, or a combination of these flow controls to maintain proportional sampling.

(2) For any other dilution system, you may use a laminar flow element, an ultrasonic flow meter, a subsonic venturi, critical-flow venturis, a positive-displacement meter, a thermal-mass meter, an averaging Pitot tube, or a hot-wire anemometer.

(c) Flow conditioning. For any type of diluted exhaust flow meter, condition the flow if needed to prevent wakes, eddies, circulating flows, or flow pulsations from affecting the accuracy or repeatability of the meter. For some meters, you may accomplish this by using a sufficient length of straight tubing (such as a length equal to 10 pipe

diameters) or by using specially designed tubing bends, orifice plates or straightening fins to establish a predictable velocity profile upstream of the meter.

(d) Exhaust cooling. You may cool diluted exhaust upstream of a diluted exhaust flow meter. If cooling causes aqueous condensation before the flow reaches the meter, then measure the dewpoint and pressure at the flow meter's inlet. Use this dewpoint and pressure for emission calculations in §1065.650.

§1065.245 Sample flow meter for batch sampling.

(a) Application. Use a sample flow meter to determine sample flow rates or total flow sampled into a batch sampling system over a test interval. You may use the difference between a diluted exhaust sample flow meter and a dilution air meter to calculate raw exhaust flow rates or total raw exhaust flow over a test interval.

(b) Component requirements. We recommend that you use a sample flow meter that meets the specifications in Table 1 of §1065.205. This may involve a laminar flow element, an ultrasonic flow meter, a subsonic venturi, critical-flow venturis, a positive-displacement meter, a thermal-mass meter, an averaging Pitot tube, or a hot-wire anemometer. Note that your overall system for measuring sample flow must meet the linearity check in §1065.307

(c) Flow conditioning. For any type of sample flow meter, condition the flow if needed to prevent wakes, eddies, circulating flows, or flow pulsations from affecting the accuracy or repeatability of the meter. For some meters, you may accomplish this by using a sufficient length of straight tubing (such as a length equal to 10 pipe diameters) or by using specially designed tubing bends, orifice plates or straightening fins to establish a predictable velocity profile upstream of the meter.

§1065.248 Gas divider.

(a) Application. You may use a gas divider to blend calibration gases.

(b) Component requirements. Use a gas divider that blends gases to the specifications of §1065.750 and to the flow-weighted concentrations expected during testing. You may use critical-flow gas dividers, capillary-tube gas dividers, or thermal-mass-meter gas dividers. Note that your overall gas-divider system must meet the linearity check in §1065.307.

CO AND CO_2 MEASUREMENTS

§1065.250 Nondispersive infra-red analyzer.

(a) Application. Use a nondispersive infra-red (NDIR) analyzer to measure CO and CO_2 concentrations in raw or diluted exhaust for either batch or continuous sampling.

(b) Component requirements. We recommend that you use an NDIR analyzer that meets the specifications in Table 1 of §1065.205. Note that your NDIR-based system must meet the calibration and performance checks in §1065.350 and §1065.355 and, for continuous measurement, it must also meet the linearity check in §1065.307.

HYDROCARBON MEASUREMENTS

§1065.260 Flame ionization detector.

(a) Application. Use a flame ionization detector (FID) analyzer to measure hydrocarbon concentrations in raw or diluted exhaust for either batch or continuous sampling. Determine hydrocarbon concentrations on a carbon number basis of one (1), C_1. Determine methane and nonmethane hydrocarbon values as described in paragraph (e) of this section. See subpart I of this part for special provisions that apply to measuring hydrocarbons when testing with oxygenated fuels.

(b) Component requirements. We recommend that you use a FID analyzer that meets the specifications in Table 1 of §1065.205. Note that your FID-based system for measuring THC must meet all of the performance checks for hydrocarbon measurement in subpart D of this part.

(c) Heated FID analyzers. For diesel-fueled engines, two-stroke spark-ignition engines, and four-stroke spark-ignition engines below 19 kW, you must use heated FID analyzers that maintain all surfaces that are exposed to emissions at a temperature of (191 ± 11) °C.

(d) FID fuel and burner air. Use FID fuel and burner air that meet the specifications of §1065.750. Do not allow the FID fuel and burner air to mix before entering the FID analyzer to ensure that the FID analyzer operates with a diffusion flame and not a premixed flame.

(e) Methane. FID analyzers measure total hydrocarbons (THC). To determine nonmethane hydrocarbons (NMHC), quantify methane, CH_4, either with a nonmethane cutter and a FID analyzer as described in §1065.265, or with a gas chromatograph as described in §1065.267. Instead of measuring methane, you may consider that 2 % of measured total hydrocarbons is methane, as described in §1065.660. For a FID analyzer used to determine NMHC, determine its response factor to CH_4, RF_{CH4}, as described in §1065.360. Note that NMHC-related calculations are described in §1065.660.

§1065.265 Nonmethane cutter.

(a) Application. You may use a nonmethane cutter to measure CH_4 with a FID analyzer. A nonmethane cutter oxidizes all nonmethane hydrocarbons to CO_2 and H_2O. Instead of measuring methane, you may consider that 2 % of measured total hydrocarbons is methane, as described in §1065.660. You may use a nonmethane cutter for raw or diluted exhaust for batch or continuous sampling.

(b) System performance. Determine nonmethane-cutter performance as described in §1065.365 and use the results to calculate NMHC emission in §1065.660.

(c) Configuration. Configure the nonmethane cutter with a bypass line for the performance check described in §1065.365.

(d) Optimization. You may optimize a nonmethane cutter to maximize the penetration of CH_4 and the oxidation of all other hydrocarbons. You may dilute a sample with purified air or oxygen (O_2) upstream of the nonmethane cutter to optimize its performance. You must account for any sample dilution in emission calculations.

§1065.267 Gas chromatograph.

(a) Application. You may use a gas chromatograph to measure CH_4 concentrations of diluted exhaust for batch sampling. Instead of measuring methane, you may consider that 2 % of measured total hydrocarbons is methane, as described in §1065.660. While you may also use a nonmethane cutter to measure CH_4, as described in §1065.265, use a reference procedure based on a gas chromatograph for comparison with any proposed alternate measurement procedure under §1065.10.

(b) Component requirements. We recommend that you use a gas chromatograph that meets the specifications in Table 1 of §1065.205.

NO_X MEASUREMENTS

§1065.270 Chemiluminescent detector.

(a) Application. You may use a chemiluminescent detector (CLD) to measure NO_x concentration in raw or diluted exhaust for batch or continuous sampling. We generally accept a CLD for NO_x measurement, even though it measures only NO (and NO_2, when coupled with an NO_2-to-NO converter), since conventional engines and aftertreatment systems do not emit significant amounts of NO_x species other than NO and NO_2. Use good engineering judgment to measure other NO_x species, as appropriate. While you may also use other instruments to

measure NO_x, as described in §1065.272 and §1065.275, use a reference procedure based on a chemiluminescent detector for comparison with any proposed alternate measurement procedure under §1065.10.

(b) Component requirements. We recommend that you use a CLD that meets the specifications in Table 1 of §1065.205. Note that your CLD-based system must meet the quench check in §1065.370 and, for continuous measurements, it must also meet the linearity check in §1065.307.

(c) NO_2-to-NO converter. Place upstream of the CLD an internal or external NO_2-to-NO converter that meets the performance check in §1065.378. Configure the converter with a bypass to facilitate this performance check.

(d) Humidity effects. You must generally maintain CLD temperature to prevent aqueous condensation; however, you may disregard condensation control if you use one of the following configurations:

(1) The CLD is downstream of an NO_2-to-NO converter that meets the performance check in §1065.378.

(2) The CLD is downstream of a thermal chiller that meets the performance check in §1065.376.

(e) Response time. You may use a heated CLD to improve CLD response time.

§1065.272 Nondispersive ultraviolet analyzer.

(a) Application. You may use a nondispersive ultraviolet (NDUV) analyzer to measure NO_x concentration in raw or diluted exhaust for batch or continuous sampling. We generally accept an NDUV for NO_x measurement, even though it measures only NO and NO_2, since conventional engines and aftertreatment systems do not emit significant amounts of other NO_x species. Use good engineering judgment to measure other NO_x species, as appropriate.

(b) Component requirements. We recommend that you use an NDUV analyzer that meets the specifications in Table 1 of §1065.205. Note that your NDUV-based system must meet the performance checks in §1065.372 and, for continuous measurement, it must also meet the linearity check in §1065.307.

(c) NO_2-to-NO converter. If your NDUV analyzer measures only NO, place upstream of the NDUV analyzer an internal or external NO_2-to-NO converter that meets the performance check in §1065.378. Configure the converter with a bypass to facilitate this performance check.

(d) Humidity effects. You must generally maintain NDUV temperature to prevent aqueous condensation; however, you may disregard condensation control if you use one of the following configurations:

(1) The NDUV is downstream of an NO_2-to-NO converter that meets the performance check in §1065.378.

(2) The NDUV is downstream of a thermal chiller that meets the performance check in §1065.376.

§1065.274 Zirconia (ZrO_2) analyzer.

(a) Application. You may use a zirconia (ZrO_2) analyzer to measure NO_x concentration in raw exhaust for continuous sampling, as long as you stay within the analyzer manufacturer's specified limits with respect to acceptable O_2 exhaust concentrations and exhaust temperature. We generally accept a ZrO_2 analyzer for NO_x measurement, even though it measures only NO and NO_2, since conventional engines and aftertreatment systems do not emit significant amounts of other NO_x species. Use good engineering judgment to measure other NO_x species, as appropriate.

(b) Component requirements. We recommend that you use a ZrO_2 analyzer that meets the specifications in Table 1 of §1065.205. Note that your ZrO_2-based system must meet the performance checks in §1065.374 and the linearity check in §1065.307.

(c) NO_2-to-NO converter. If your ZrO_2 analyzer measures only NO, place upstream of the ZrO_2 analyzer an NO_2-to-NO converter that meets the performance check in §1065.378. Configure the converter with a bypass to facilitate this performance check.

(d) Humidity effects. You must generally maintain ZrO_2 analyzer temperature to prevent aqueous condensation; however, you may disregard condensation control if you use one of the following configurations:

(1) The ZrO_2 analyzer is downstream of an NO_2-to-NO converter that meets the performance check in §1065.378.

(2) The ZrO_2 analyzer is downstream of a thermal chiller that meets the performance check in §1065.376.

O_2 MEASUREMENTS

§1065.280 Paramagnetic detection analyzer.

(a) Application. You may use a paramagnetic detection (PMD) analyzer to measure O_2 concentration in raw or diluted exhaust for batch or continuous sampling. While you may also use a zirconia analyzer to measure O_2, as described in §1065.283, use a reference procedure based on paramagnetic detection analyzers for comparison with any proposed alternate measurement procedures under §1065.10

(b) Component requirements. We recommend that you use a PMD analyzer that meets the specifications in Table 1 of §1065.205. Note that it must meet the linearity check in §1065.307 for continuous measurements.

(c) Interference gas compensation. Compensate for PMD interference gases according to ISO 8178-1, Section 8.9.4 (incorporated by reference in §1065.1010).

§1065.284 Zirconia (ZrO_2) analyzer.

(a) Application. You may use a zirconia (ZrO_2) analyzer to measure O_2 concentration in raw exhaust for continuous sampling.

(b) Component requirements. We recommend that you use a ZrO_2 analyzer that meets the specifications in Table 1 of §1065.205. Note that your ZrO_2-based system must meet the linearity check in §1065.307.

PM MEASUREMENTS

§1065.290 PM gravimetric balance.

(a) Application. Use a balance to weigh net PM on a sample medium for laboratory testing.

(b) Component requirements. We recommend that you use a balance that meets the specifications in Table 1 of §1065.205. Note that your balance-based system must meet the linearity check in §1065.307. If the balance uses internal calibration weights for routine spanning and linearity checks, the calibration weights must meet the specifications in §1065.790. While you may also use an inertial balance to measure PM, as described in §1065.295, use a reference procedure based on a gravimetric balance for comparison with any proposed alternate measurement procedure under §1065.10.

(c) Periodic verification. Get the balance manufacturer or a representative approved by the balance manufacturer to verify the balance performance at least once every 12 months.

(d) Pan design. Use a balance pan designed to minimize corner loading of the balance, as follows:

(1) Use a pan that centers the PM sample on the weighing pan. For example, use a pan in the shape of a cross that has upswept tips that center the PM sample media on the pan.

(2) Use a pan that positions the PM sample as low as possible.

(e) Balance configuration. Configure the balance for optimum settling time and stability at your location.

§1065.295 PM inertial balance for field-testing analysis.

(a) Application. You may use an inertial balance to quantify net PM on a sample medium for field testing.

(b) Component requirements. We recommend that you use a balance that meets the specifications in Table 1 of §1065.205. Note that your balance-based system must meet the linearity check in §1065.307. If the balance uses an internal calibration process for routine spanning and linearity checks, the process must be NIST-traceable.

(c) Periodic verification. Get the balance manufacturer or a representative approved by the balance manufacturer to verify the balance performance at least once every 12 months.

Subpart D—Calibrations and Performance Checks

§1065.301 Overview and general provisions.

(a) This subpart describes required and recommended calibrations and performance checks for measurement instruments. See subpart C of this part for specifications and system requirements that apply to individual instruments.

(b) You must generally use complete measurement systems when performing calibrations or performance checks. For example, this would generally involve evaluating instruments based on values recorded with the complete system you use for recording test data, including analog-to-digital converters. For some calibrations and performance checks, we may specify that you disconnect part of the measurement system to introduce a simulated signal.

(c) If we do not specify a calibration or performance check for a portion of your measurement system, calibrate that portion of your system and check its performance at a frequency consistent with any recommendations from the measurement-system manufacturer, consistent with good engineering judgment.

(d) Use NIST-traceable standards to the tolerances we specify for calibrations and performance checks. Where we specify the need to use NIST-traceable standards, you may alternatively ask for our approval to use international standards that are not traceable to NIST standards.

§1065.303 Summary of required calibration and performance checks

(a) The following table summarizes the required and recommended calibrations and performance checks described in this subpart. The table also indicates when these have to be performed.

Table 1 of §1065.303–Summary of required calibration and performance checks

Calibration or performance check	Perform calibration or performance check..
§1065.305: accuracy, repeatability and noise	Accuracy: not required, but recommend for initial installation Repeatability: not required, but recommend for initial installation Noise: required during initial installation only if you correct for noise (See §1065.658).
§1065.307: Linearity	Speed: Initial installation, and after major maintenance. Torque: Once every 12 months, and after major maintenance. Flows: Once every 12 months, and after major maintenance unless flow is verified by propane check or carbon (or oxygen) balance. Continuous analyzers: Once every 6 months, and after major maintenance.
§1065.308: continuous analyzer system response	Initial installation and after major system reconfiguration.
§1065.310: torque	Initial installation and good engineering judgment afterward.
§1065.315: pressure, temperature, dewpoint	Initial installation and good engineering judgment afterward.
§1065.320: fuel flow	Initial installation and good engineering judgment afterward.
§1065.325: intake flow	Initial installation and good engineering judgment afterward.
§1065.330: exhaust flow	Initial installation and good engineering judgment afterward.
§1065.340: diluted exhaust flow (CVS)	Initial installation, after major system reconfiguration, and as part of corrective action.
§1065.341: CVS and batch sampler verification	After CVS and batch sampler calibration and in lieu of linearity check.

§1065.345: vacuum leak	Initial installation, within 7 days of an emission test, and after major maintenance.
§1065.350: CO_2 NDIR H_2O interference	Initial installation and after major maintenance.
§1065.355: CO NDIR CO_2 and H_2O interference	Initial installation and after major maintenance.
§1065.360: FID optimization, etc.	Calibrate, optimize, and determine CH_4 response: initial installation and good engineering judgment afterward Check CH_4 response: once every 12 months, and after major maintenance.
§1065.362: Raw exhaust FID O_2 interference	Initial installation and after major maintenance.
§1065.365: Nonmethane cutter penetration	Once every 6 months, and after major maintenance.
§1065.370: CLD CO_2 and H_2O quench	Initial installation and after major maintenance.
§1065.372: NDUV NMHC and H_2O interference	Initial installation and after major maintenance.
§1065.374: ZrO_2 NH_3 interference and NO_2 response	Initial installation and after major maintenance.
§1065.376: Chiller NO_2 penetration	Initial installation and after major maintenance.
§1065.378: NO_2 to NO converter conversion	Once every 6 months, and after major maintenance.
§1065.390: PM balance and weighing	Within 12 hours of weighing, and after major maintenance.

§1065.305 Performance checks for accuracy, repeatability, and noise.

(a) This section describes how to determine the accuracy, repeatability, and noise of an instrument. Table 1 of §1065.205 specifies recommended values for individual instruments.

(b) We do not require you to check instrument accuracy or repeatability, and we require you to check instrument noise only as specified in paragraph (c) of this section. However, it may be useful to consider these performance checks to define a specification for a new instrument, to verify the performance of a new instrument upon delivery, or to troubleshoot an existing instrument.

(c) If you correct a constituent analyzer for noise as described in §1065.658, you must have performed the noise performance check in this section within the past 12 months.

(d) In this section we use the letter "y" to denote a generic measured quantity, the superscript over-bar to denote an arithmetic mean (i.e., $\overline{y}$), and the subscript "$_{ref}$" to denote the reference quantity being measured.

(e) Conduct these checks as follows:

(1) Prepare an instrument so it operates at its specified temperatures, pressures, and flows. Perform any instrument linearization or calibration procedures prescribed by the instrument manufacturer.

(2) Zero the instrument by introducing a zero signal. Depending on the instrument, this may be a zero-concentration gas, a reference signal, a set of reference thermodynamic conditions, or some combination of these. For gaseous constituent analyzers, use a zero gas that meets the specifications of §1065.750(a).

(3) Span the instrument by introducing a span signal. Depending on the instrument, this may be a span-concentration gas, a reference signal, a set of reference thermodynamic conditions, or some combination of these. For gaseous-exhaust constituent analyzers, use a span gas that meets the specifications of §1065.750(a).

(4) Use the instrument to quantify a NIST-traceable reference quantity, y_{ref}. Select a reference quantity near the mean value expected during testing. For all exhaust constituent analyzers, use a quantity near the flow-weighted average concentration expected at the standard and known within the specifications of §1065.750(a). For a noise performance check, use the same zero gas from paragraph (e) of this section as the reference quantity. In all cases, allow time for the instrument to stabilize while it measures the reference quantity. Stabilization time may include time to purge an instrument and time to account for its response.

(5) Sample 25 values, record the arithmetic mean of the 25 values, $\overline{y}_i$, and record the standard deviation σ_i, of the 25 values. Refer to §1065.602 for an example of calculating arithmetic mean and standard deviation.

(6) Subtract the reference value, y_{ref}, from the arithmetic mean, $\overline{y}_i$. Record this value as the error, ε_i.

(7) Repeat the steps specified in paragraphs (e)(2) through (6) of this section until you have ten arithmetic means, $\left(\overline{y}_1, \overline{y}_2, \overline{y}_3, ...\overline{y}_{10}\right)$, ten standard deviations, $\left(\sigma_1, \sigma_2, \sigma_3, ...\sigma_{10}\right)$, and ten errors $\left(\varepsilon_1, \varepsilon_2, \varepsilon_3, ...\varepsilon_{10}\right)$.

(8) Instrument accuracy is the absolute difference between the reference quantity, y_{ref} and the arithmetic mean of the ten $\overline{y}_i$. Refer to the accuracy example calculation in §1065.602. We recommend that instrument accuracy be within the specifications in Table 1 of §1065.205.

(9) Repeatability is two times the standard deviation of the ten errors: $\left(\text{e.g. repeatability} = 2 \cdot \sigma_\varepsilon\right)$. Refer to the standard deviation example calculation in §1065.602. We recommend that instrument repeatability be within the specifications in Table 1 of §1065.205.

(10) Noise is two times the root mean square of the ten standard deviations, $\left(e.g.\ noise = 2 \cdot rms_\sigma\right)$. Refer to the root mean square example calculation in §1065.602. We recommend that instrument noise be within the specifications in Table 1 of §1065.205. Use this value in the noise correction specified in §1065.657.

(11) You may use a measurement instrument that does not meet the accuracy, repeatability, or noise specifications in Table 1 of §1065.205, as long as you meet all the following criteria:

(i) You try to correct the problem.

(ii) Your measurement systems meet all required calibration, performance checks, and validation specifications.

(iii) The measurement deficiency does not affect your ability to show that your engines comply with all applicable emission standards.

§1065.307 Linearity check.

(a) Perform a linearity check on each measurement system listed in Table 1 of this section at least as frequently as indicated in the table, or more frequently, consistent with good engineering judgment; for example, if the measurement system manufacturer recommends it. Note that this linearity check replaces requirements that we previously referred to as calibration specifications.

(b) If a measurement system does not meet the applicable linearity criteria, correct the deficiency by re-calibrating, servicing, or replacing components as needed. Before you may use a measurement system that does not meet linearity criteria, you must get us to approve it under §1065.10.

(c) The intent of a linearity check is to determine that a measurement system responds proportionally over the measurement range of interest. A linearity check generally consists of introducing a series of at least 10 reference values to a measurement system. These reference values are about evenly spaced from the lowest to the highest values expected during emission testing. The measurement system quantifies each reference value. The measured values are then collectively compared to the reference values by using the linearity criteria specified in Table 1 of this section.

(d) Use the following linearity-check protocol, or use good engineering judgment to develop a different protocol that satisfies the intent of this section, as described in paragraph (c) of this section:

(1) In this paragraph (d), we use the letter "y" to denote a generic measured quantity, the superscript over-bar to denote an arithmetic mean (i.e., $\overline{y}$), and the subscript "$_{ref}$" to denote the known (or reference) quantity being measured.

(2) Operate a measurement system at its specified temperatures, pressures, and flows. This may include any specified adjustment or periodic calibration of the measurement system.

(3) Zero the instrument by introducing a zero signal. Depending on the instrument, this may be a zero-concentration gas, a reference signal, a set of reference thermodynamic conditions, or some combination of these. For gaseous constituent analyzers, use a zero gas that meets the specifications of §1065.750(a).

(4) Span the instrument by introducing a span signal. Depending on the instrument, this may be a span-concentration gas, a reference signal, a set of reference thermodynamic conditions, or some combination of these. For gaseous-exhaust constituent analyzers, use a span gas that meets the specifications of §1065.750(a).

(5) Select 10 reference values, y_{refi} that are nominally evenly spaced from the lowest to the highest values expected during emission testing. Generate reference quantities as described in paragraph (e) of this section. For gaseous-exhaust constituent analyzers, use gas concentrations known to be within the specifications of §1065.750(a).

(6) Select the greatest reference value and introduce it to the measurement system.

(7) Allow time for the instrument to stabilize while it measures the reference value. Stabilization time may include time to purge an instrument and time to account for its response.

(8) At a frequency of f Hz specified in Table 1 of §1065.205, measure the reference value 25 times and record the arithmetic mean of the 25 values, $\overline{y}_i$. Refer to §1065.602 for an example of calculating an arithmetic mean.

(9) Select smallest reference value, and repeat steps in paragraphs (d)(7) and (d)(8) of this section.

(10) Alternate between selecting the highest and lowest remaining untested reference values until you have measured all the reference values.

(11) Use the arithmetic means, $\overline{y}_i$, and reference values, y_{refi} , to calculate statistical values to compare to the criteria specified in Table 1 of this section. Use the statistical calculations as described in §1065.602.

(e) This paragraph (e) describes recommended methods for generating reference values for the linearity-check protocol in paragraph (d) of this section. Use reference values that simulate actual values, or introduce an actual value and measure it with a reference-measurement system. In the latter case, the reference value is the value reported by the reference-measurement system. Reference values and reference-measurement systems must be traceable to NIST standards. Use the following recommended methods to generate reference values or use good engineering judgment to select a different method:

(1) Engine speed. Run the engine or dynamometer at a series of steady-state speeds and use a strobe, a photo tachometer, or a laser tachometer to record reference speeds.

(2) Engine torque. Use a series of calibration weights and a calibration lever arm to simulate engine torque, Alternately, you may use the engine or dynamometer itself to generate a nominal torque that is measured by a reference load cell in series with the torque measurement system. In this case use the reference load cell measurement as the reference value. Refer to §1065.310 for a torque-calibration procedure similar to the linearity check in this section.

(3) Fuel rate. Operate the engine at a series of constant fuel-flow rates. Use a gravimetric reference measurement (such as a scale, balance, or mass comparator) at the inlet to the fuel-measurement system. Use a stopwatch to measure the time intervals over which reference masses of fuel are introduced to the fuel measurement system. The reference fuel mass divided by the time interval is the reference fuel flow rate.

(4) Flow rates—inlet air, dilution air, diluted exhaust, raw exhaust, or sample flow. Use a reference flow meter with a blower or pump to simulate flow rates. Use a restrictor or diverter valve or a variable speed blower or

pump to control the range of flow rates. Use the reference meter's response as the reference values. Because the flow range requirements for these various flows are large, we allow a variety of reference meters . For example, for diluted exhaust flow for a full flow dilution system we recommend a reference subsonic venturi flow meter with a restrictor valve and a blower to simulate flow rates. For inlet air, dilution air, diluted exhaust for partial flow dilution, raw exhaust or sample flow we allow reference meters such as critical flow orifices, critical flow venturis, laminar flow elements, master mass flow standards, or Roots meters. Ensure that your reference meter is calibrated by the flow meter manufacturer and that its calibration is traceable to NIST. If you use the difference of two flow measurements to determine a single flow rate, you may use one of the measurements as a reference for the other.

(5) Gas division. At the outlet of the gas division system, connect a gas analyzer that meets the linearity check described in this section. Operate this analyzer consistent with how you would operate it for emission testing. Connect to the gas divider inlet a span gas for the analyzer. Use the gas division system to divide the span gas with purified air or nitrogen. Select gas divisions that you typically use. Use a selected gas division as the measured value. Use the quotient of the analyzer response divided by the span gas concentration as the reference value.

(6) Continuous constituent concentration. For reference values, use a series of gas cylinders of known gas concentration or use a gas-division system that is known to be linear with a span gas. Gas-cylinders, gas-division systems, and span gases that you use for reference values must meet the specifications of §1065.750.

Table 1 of §1065.307–Measurement systems that require linearity checks

Measurement System	Quantity	When to perform linearity check[a]	Linearity Criteria[c]
Engine speed	f_n	After major maintenance	$\lvert a_0 \rvert \leq 0.05$ % x f_{nmax} , $0.98 \leq a_1 \leq 1.02$ $SE \leq 2$ % x f_{nmax} , $r^2 \geq 0.990$
Engine torque	T	Every 12 months	$\lvert a_0 \rvert \leq 1$ % x T_{max} , $0.98 \leq a_1 \leq 1.02$ $SE \leq 2$ % x T_{max} , $r^2 \geq 0.990$
Fuel flow rate	$\dot{m}$	Every 12 months[b]	$\lvert a_0 \rvert \leq 1$ % x $\dot{m}_{max}$, $0.98 \leq a_1 \leq 1.02$ [d] $SE \leq 2$ % x $\dot{m}_{max}$, $r^2 \geq 0.990$
Intake-air flow rate	$\dot{n}$	After major maintenance[b]	$\lvert a_0 \rvert \leq 1$ % x $\dot{n}_{max}$, $0.98 \leq a_1 \leq 1.02$ [d] $SE \leq 2$ % x $\dot{n}_{max}$, $r^2 \geq 0.990$
Dilution air flow rate	$\dot{n}$	After major maintenance[b]	$\lvert a_0 \rvert \leq 1$ % x $\dot{n}_{max}$, $0.98 \leq a_1 \leq 1.02$ $SE \leq 2$ % x $\dot{n}_{max}$, $r^2 \geq 0.990$
Diluted exhaust flow rate	$\dot{n}$	After major maintenance[b]	$\lvert a_0 \rvert \leq 1$ % x $\dot{n}_{min}$, $0.98 \leq a_1 \leq 1.02$ $SE \leq 2$ % x $\dot{n}_{max}$, $r^2 \geq 0.990$
Raw exhaust flow rate	$\dot{n}$	Every 12 months [b]	$\lvert a_0 \rvert \leq 1$ % x $\dot{n}_{max}$, $0.98 \leq a_1 \leq 1.02$ [d] $SE \leq 2$ % x $\dot{n}_{max}$, $r^2 \geq 0.990$
Sample flow rate	$\dot{n}$	Every 12 months [b]	$\lvert a_0 \rvert \leq 1$ % x $\dot{n}_{max}$, $0.98 \leq a_1 \leq 1.02$ $SE \leq 2$ % x $\dot{n}_{max}$, $r^2 \geq 0.990$
Gas dividers	x	Every 12 months	$\lvert a_0 \rvert \leq 0.5$ % x x_{max} , $0.98 \leq a_1 \leq 1.02$ $SE \leq 2$ % x x_{max} , $r^2 \geq 0.990$
Continuous constituent concentration (e.g., gas analyzers)	x	Every 6 months	$\lvert a_0 \rvert \leq 0.5$ % x x_{max} , $0.98 \leq a_1 \leq 1.02$ $SE \leq 2$ % x x_{max} , $r^2 \geq 0.990$

[a] Perform a linearity check more frequently based upon the instrument manufacturer's recommendations.

[b] These linearity checks are not required for systems that pass the flow-rate check for diluted exhaust as described in §1065.341 (the propane check) or for systems that agree within ±2 % based on a chemical balance of carbon or oxygen of the intake air, fuel, and exhaust.

[c] "max" refers to the maximum value expected during a test—the maximum value used for the linearity check.

[d] a_0 and a_1 for these quantities are required only if the actual value of the quantity is required, versus a signal that is only linearly proportional to the actual value.

§1065.308 Continuous gas analyzer system response check.

(a) Scope and frequency. Perform this check after installing or replacing a gas analyzer that you use for continuous sampling. Also perform this check if you reconfigure your system in a way that would change system response. For

example, you add a significant volume to the transfer lines by increasing their length or adding a filter. As another example, you change the frequency at which you sample and record gas analyzer concentrations.

(b) Measurement principles. This check is an overall system response check for continuous analyzers. It evaluates two aspects of instrument response, as follows:

(1) Uniform response. To determine a single gas concentration, you may combine more than one gas measurement. For example, you may measure an interference gas and use its value in an algorithm to compensate the value of another measured gas concentration. The response of the interference gas instrument must match the response of the instrument that it is compensating.

(2) Overall system response. The overall system response and the system's recording frequency must be properly matched. Gas analyzer systems must be optimized such that their overall response to a rapid change in concentration is recorded at an appropriate frequency to prevent loss of information.

(c) System requirements. The response check is evaluated by two performance criteria, as follows:

(1) Compensated signals must have a uniform rise and fall during the full response to a step change. During a system response to a rapid change in multiple gas concentrations, the shape of any compensated signal must have no more than one inflection point. In other words, the second derivative of any compensated signal must change sign from negative (-) to positive (+) no more than once whenever a multi-component step increase occurs, and the second derivative must change sign from positive (+) to negative (-) no more than once whenever a multi-component step decrease occurs

(2) The product of the mean rise time and the sampling frequency must be at least 5, and the product of the mean fall time and the sampling frequency must be at least 5.

(d) Procedure. Use the following procedure to check the response of your continuous gas analyzer system.

(1) Instrument setup. Follow the analyzer system manufacturers' start-up and operation instructions. Adjust the system as needed to optimize performance.

(2) Equipment setup. Connect a zero air source to one inlet of a fast acting 3-way valve (2 inlets, 1 outlet). Connect an NO, CO, CO_2, C_3H_8 quad-blend span gas to the other valve inlet. Connect the valve outlet to a heated line at 50 °C, and connect the heated line outlet to the inlet of a 50 °C gas bubbler filled with distilled water. Connect the bubbler outlet to another heated line at 100 °C. Connect the outlet of the 100 °C line to the gas analyzer system's probe or to the overflow fitting between the probe and transfer line.

(3) Data collection.

(i) Switch the valve to flow zero gas.

(ii) Allow for stabilization, accounting for transport delays and the slowest instrument's full response.

(iii) Start recording data at the frequency you would during emission testing.

(iv) Switch the valve to flow span gas.

(v) Allow for transport delays and the slowest instrument's full response.

(vi) Repeat the steps in paragraphs (d)(3)(i) through (v) of this section to record seven full cycles, ending with zero gas flowing to the analyzers.

(v) Stop recording.

(4) Performance evaluation.

(i) Uniform response. Compute the second derivative for any compensated analyzer signals. The second derivative must change sign from negative (-) to positive (+) no more than once whenever span gas was flowed, and the second derivative must change sign from positive (+) to negative (-) no more than once whenever zero gas was flowed. If it did, determine if the cause was an interference gas compensation signal. If you can positively demonstrate that any failure was not caused by an interference compensation signal, then the analyzer system passes this test. Otherwise, adjust the compensation algorithms' time-alignment and/or dispersion to result in a uniform rise and fall during this performance check.

(ii) Rise time, fall time, and recording frequency. Calculate the mean rise time, T_{10-90} and mean fall time T_{90-10} for each of the analyzers. Multiply these times (in s) by their respective recording frequencies in Hertz (1/s). The value for each result must be at least 5. If the value is less than 5, increase the recording frequency or adjust the flows or design of the sampling system to increase the rise time and/or fall time. You may not use interpolation to increase the number or recorded values. In other words, each recorded value must be a unique record of the actual analyzer signal.

MEASUREMENT OF ENGINE PARAMETERS AND AMBIENT CONDITIONS

§1065.310 Torque calibration.

Calibrate your torque measurement system upon initial installation, and use good engineering judgment to re-calibrate your system. Calibrate torque with the lever-arm dead-weight technique or the transfer technique, as described in paragraphs (a) and (b) of this section. We define the NIST "true value" torque as the torque calculated by taking the product of a weight or force traceable to NIST and a sufficiently accurate horizontal distance along a lever arm, corrected for the lever arm's hanging torque.

(a) The lever-arm dead-weight technique involves placing known weights at a known horizontal distance from the torque-measuring device's center of rotation. You need two types of equipment:

(1) Calibration weights or force. This technique requires calibration weights or a force apparatus traceable to NIST standards. Use at least six calibration points for each applicable torque-measuring range, spacing the points about equally over the range.

(i) For calibration weights, determine their force by multiplying their NIST-traceable masses by your local acceleration of Earth's gravity. The local acceleration of gravity, a_g at your latitude, longitude, and elevation may be determined by entering your position and elevation data into the United States' National Oceanographic and Atmospheric Administration's surface gravity prediction website: http://www.ngs.noaa.gov/cgi-bin/grav_pdx.prl. If this website is unavailable, you may use the equations in §1065.630, which return your local acceleration of gravity based on your latitude and elevation. Make sure the lever arms are perpendicular to gravity.

(ii) [Reserved]

(2) Lever arm. Apply the calibration weights or force apparatus to the torque-sensing device through a lever arm. The length of the lever arm, from the point where the calibration force or weights are applied to the dynamometer centerline, must be known accurately enough to allow the system to meet the linearity criteria in Table 1 of §1065.307. Take into account the torque-producing effect of the lever arm's mass. You may balance the lever arm's mass to minimize the torque-producing effect.

(b) The transfer technique involves calibrating a master load cell, such as a dynamometer-case load cell. You may calibrate the master load cell with known calibration weights or force at known horizontal distances. Alternatively, you may use a pre-calibrated master load cell to transfer this calibration to the device that measures engine torque. The transfer technique involves the following three main steps:

(1) Pre-calibrate a master load cell using weights or force and a lever arm as specified in paragraph (a) of this section. Run or vibrate the dynamometer during this calibration to reduce frictional static hysteresis.

(2) The measured horizontal distance from the dynamometer centerline to the point where you apply a weight or force must be accurate to within ±0.5 %. Balance the arms or know their net hanging torque to within ±0.5 %.

(3) Transfer calibration from the case or master load cell to the torque-measuring device with the dynamometer operating at a constant speed. Calibrate the torque-measurement device's readout to the master load cell's torque readout at a minimum of six loads spaced about equally across the full useful ranges of both measurement devices. Transfer the calibration so it meets the linearity criteria in Table 1 of §1065.307.

§1065.315 Pressure, temperature, and dewpoint calibration.
(a) Follow the measurement-system manufacturer's instructions and recommended frequency for calibrating pressure, temperature, and dewpoint, upon initial installation and use good engineering judgment to re-calibrate, as follows:

(1) Pressure. We recommend temperature-compensated, digital-pneumatic, or deadweight pressure calibrators, with data-logging capabilities to minimize transcription errors.

(2) Temperature. We recommend digital dry-block or stirred-liquid temperature calibrators, with datalogging capabilities to minimize transcription errors.

(3) Dewpoint. We recommend a minimum of three different temperature-equilibrated and temperature-monitored calibration salt solutions in containers that seal completely around the dewpoint sensor.

(b) You may remove system components for off-site calibration.

FLOW-RELATED MEASUREMENTS

§1065.320 Fuel flow calibration.
(a) Follow the measurement-system manufacturer's instructions for calibrating a fuel flow meter upon initial installation and use good engineering judgment to re-calibrate. We recommend using a scale and a stopwatch.

(b) You may also develop a procedure based on a chemical balance of carbon or oxygen in engine exhaust.

(c) You may remove system components for off-site calibration. When installing a flow meter with an off-site calibration, we recommend that you consider the effects of your tubing configuration upstream and downstream of your flow meter.

§1065.325 Intake flow calibration.
(a) Follow the measurement-system manufacturer's instructions for calibrating intake-air flow upon initial installation, and use good engineering judgment to re-calibrate. We recommend using a calibration subsonic venturi.

(b) You may remove system components for off-site calibration. When installing a flow meter with an off-site calibration, we recommend that you consider the effects of your tubing configuration upstream and downstream of your flow meter.

(c) If you use a subsonic venturi for intake flow measurement, we recommend that you calibrate it as described in §1065.340.

§1065.330 Exhaust flow calibration.
(a) Follow the measurement-system manufacturer's instructions for calibrating exhaust flow upon initial installation, and use good engineering judgment to re-calibrate. We recommend that you use a calibration subsonic venturi and simulate exhaust temperatures by incorporating a heat exchanger between the calibration meter and your exhaust-flow meter.

(b) You may remove system components for off-site calibration. When installing a flow meter with an off-site calibration, we recommend that you consider the effects of your tubing configuration upstream and downstream of your flow meter.

(c) If you use a subsonic venturi for intake flow measurement, we recommend that you calibrate it as described in §1065.340.

§1065.340 Diluted exhaust flow (CVS) calibration.
(a) Overview. This section describes how to calibrate flow meters for diluted exhaust constant-volume sampling (CVS) systems.

(b) Scope and frequency. Perform this calibration while the flow meter is installed in its permanent position. Perform this calibration after you change any part of the flow configuration upstream or downstream of the flow meter that may affect the flow meter calibration. Perform this calibration upon initial CVS installation and whenever corrective action does not resolve a failure to meet the diluted exhaust flow check in §1065.341.

(c) Reference flow meter. Calibrate a CVS flow meter using a reference subsonic venturi flow meter. Long radius ASME/NIST flow nozzles are acceptable. Use a reference flow meter that is within ±1 % NIST traceability. Use this reference flow meter's response to flow as the reference value for CVS flow meter calibration.

(d) Configuration. Do not use an upstream screen or other restriction that could affect the flow ahead of the reference flow meter, unless the flow meter has been calibrated with such a restriction.

(e) PDP calibration. Calibrate a PDP to determine a flow versus PDP speed equation that accounts for flow leakage across sealing surfaces in the PDP as a function of PDP inlet pressure. Calibrate a PDP flow meter as follows:

(1) Connect the system as shown in Figure 1 of this section.

(2) Eliminate leaks between the calibration flow meter and the PDP such that total leakage is less than 0.3 % of the lowest flow point; for example, at the highest restriction and lowest PDP-speed point.

(3) While the PDP operates, maintain a constant temperature at the PDP inlet within ±2 % of the average absolute inlet temperature, $\overline{T}_{in}$.

(4) Set the PDP speed to the first speed point at which you intend to calibrate.

(5) Set the variable restrictor to its wide-open position.

(6) Operate the PDP for at least 3 min to stabilize the system. Continue operating the CFV and record the mean of at least 25 measurements of each of the following quantities:

(i) Flow rate of the reference flow meter, $\dot{n}$.

(ii) Temperature at the PDP inlet, T_{in}.

(iii) Static absolute pressure at the PDP inlet, P_{in}.

(iv) Static absolute pressure at the PDP outlet, P_{out}.

(v) PDP speed, f_{PDP}.

(7) Incrementally close the restrictor valve to decrease the absolute pressure at the inlet to the PDP, P_{in}.

(9) Repeat the steps in paragraphs (e)(6) and(e)(7) of this section to record data at a minimum of six restrictor positions reflecting the full range of possible in-use pressures at the PDP inlet.

(10) Calibrate the PDP by using the collected data and the equations in §1065.640.

(11) Repeat the steps in paragraphs (e)(6) through (e)(10) of this section for each speed that you operate the PDP.

(12) Use the equations in §1065.642 to determine the PDP flow equation for emission testing.

(13) Verify the calibration by performing a CVS check (i.e., propane check) as described in §1065.341

(14) Use the flow equation to determine PDP flow during emission testing. Do not use the PDP below the lowest inlet pressure tested during calibration.

(f) CFV calibration. Calibrate a CFV to verify its discharge coefficient, C_d and the lowest inlet pressure at which you may use your CFV. Calibrate a CFV flow meter as follows:

(1) Connect the system as shown in Figure 1 of this section.

(2) Eliminate leaks between the calibration flow meter and the CFV such that total leakage is less than 0.3 % of total flow at the highest restriction.

(3) While the CFV operates, maintain a constant temperature at the CFV inlet within ±2 % of the average absolute inlet temperature, $\overline{T}_{in}$.

(4) Start the blower downstream of the CFV.

(5) Set the variable restrictor to its wide-open position.

(6) Operate the CFV for at least 3 min to stabilize the system. Continue operating the CFV and record the mean of at least 25 measurements of each of the following quantities:

(i) Flow rate of the reference flow meter, $\dot{n}$.

(ii) Optionally, dewpoint of the calibration air, T_{dew}. See §1065.640 for permissible assumptions.

(iii) Temperature at the venturi inlet, T_{in}.

(iv) Static absolute pressure at the venturi inlet, P_{in}.

(7) Incrementally close the restrictor valve to decrease the absolute pressure at the inlet to the CFV, P_{in}.

(8) Repeat the steps in paragraphs (f)(6) and (f)(7) of this section to record data at a minimum of ten restrictor positions, such that you test the full range of inlet pressures expected during testing .

(9) Determine C_d and the lowest inlet pressure at which you may use your CFV as described in §1065.640.

(10) Verify the calibration by performing a CVS check (i.e., propane check) as described in §1065.341.

(11) Use the C_d to determine CFV flow during an emission test. Do not use the CFV below the lowest inlet pressure tested during calibration.

(g) SSV calibration. Calibrate an SSV flow meter as follows:

Calibrate an SSV to determine its calibration coefficient, C_d for the range of inlet pressures over which you may use your SSV. Calibrate an SSV flow meter as follows:

(1) Connect the system as shown in Figure 1 of this section.

(2) Eliminate leaks between the calibration flow meter and the SSV such that total leakage is less than 0.3 % of total flow at the highest restriction.

(3) While the SSV operates, maintain a constant temperature at the SSV inlet within ±2 % of the average absolute inlet temperature, $\overline{T}_{in}$.

(4) Start the blower downstream of the SSV.

(5) Set the variable restrictor or variable-speed blower to a flow rate greater than the greatest flow rate expected during testing. Because we do not allow extrapolation of flow rates beyond calibrated values, we recommend that you ensure that the SSV throat Reynolds number (Re#) at your greatest calibrated flow rate is greater than the maximum Re# expected during testing.

(6) Operate the SSV for at least 3 min to stabilize the system. Continue operating the SSV and record the mean of at least 25 measurements of each of the following quantities:

(i) Flow rate of the reference flow meter, $\dot{n}$.

(ii) Optionally, dewpoint of the calibration air, T_{dew}. See §1065.640 for permissible assumptions.

(iii) Temperature at the venturi inlet, T_{in}.

(iv) Static absolute pressure at the venturi inlet, P_{in}.

(v) Static absolute pressure at the venturi throat, P_{th}.

(7) Incrementally close the restrictor valve or decrease the blower speed to decrease the flow rate.

(9) Repeat the steps in paragraphs (g)(6) through (g)(7) of this section to record data at a minimum of ten flow rates.

(10) Determine a functional form of C_d versus $Re^{\#}$ by using the collected data and the equations in §1065.640.

(11) Verify the calibration by performing a CVS check (i.e., propane check) as described in §1065.341 using the new C_d versus $Re^{\#}$ equation.

(12) Use the SSV only between the minimum and maximum calibrated flow rates.

(13) Use the equations in §1065.642 to determine SSV flow during a test.

(h) Ultrasonic flow meter calibration. [Reserved]

Figure 1 of §1065.340—Schematic diagrams for diluted exhaust flow (CVS) calibration.

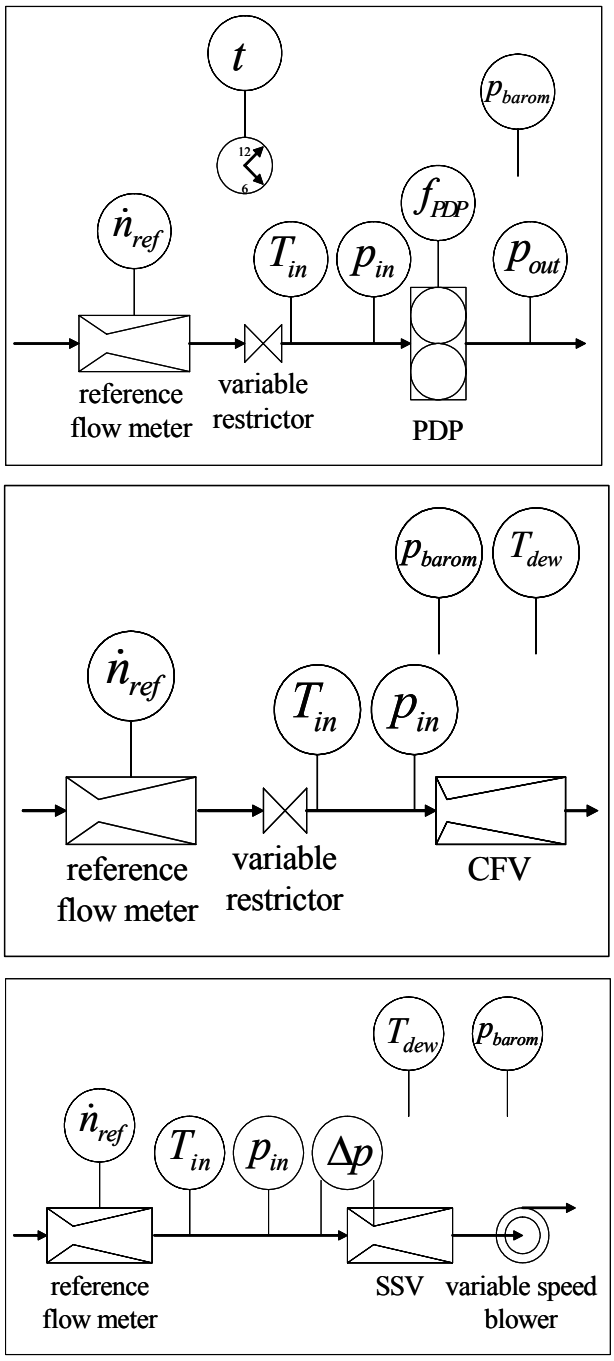

§1065.341 CVS and batch sampler verification (i.e. propane check).

(a) Perform this check to determine if there is a discrepancy in your measured values of diluted exhaust flow. You may also perform this check to determine if there is a discrepancy in a batch sampling system that extracts a sample from a CVS. Failure of this check might indicate that one or more of the following problems might require corrective action:

(1) Incorrect analyzer calibration. Re-calibrate FID analyzer or repair or replace analyzer.

(2) Leaks. Inspect CVS tunnel, connections, and fasteners and repair or replace components.

(3) Poor mixing. Perform the check as described in paragraph (b) of this section while traversing sampling probe across diameter of tunnel, vertically and horizontally. If analyzer response indicates a deviation that exceeds ±2 % of the mean measured concentration, consider operating the CVS at a higher flow rate or installing a mixing plate or orifice to improve mixing.

(4) Hydrocarbon contamination in the sample system. Perform the hydrocarbon contamination check as described in §1065.520.

(5) Change in CVS calibration. Perform an in-situ calibration of the CVS flow meter as described in §1065.340.

(6) Other problems with the CVS or sampling check hardware or software. Inspect CVS system, the CVS check hardware, and your software for discrepancies.

(b) C_3H_8 check. This check uses either a reference mass or a reference flow rate of C_3H_8 as a tracer gas in a CVS. Note that if you use a reference flow rate, you might have to account for the non-ideal gas behavior of C_3H_8 in your reference flow meter. You inject the reference C_3H_8 into the CVS and then calculate the mass you injected using your NMHC measurements and CVS flow rate measurements.

(c) Prepare for this check as follows:

(1) Obtain a cylinder charged with C_3H_8. Determine the reference cylinder's full weight within ±0.5 % if you use a reference mass instead of a reference flow rate.

(2) Select appropriate flow rates for the CVS and C_3H_8.

(3) Select a C_3H_8 injection port in the CVS. Select the port location to be as close as practical to the location where you introduce engine exhaust into the CVS. Connect the C_3H_8 cylinder to the injection system.

(4) Operate and stabilize the CVS.

(5) Preheat any heat exchangers in the sampling system.

(6) Allow heated components such as sample lines, filters, and pumps to stabilize at operating temperature.

(7) You may purge your NMHC sampling system during stabilization.

(8) If applicable, perform a vacuum side leak check of the NMHC sampling system as described in §1065.345.

(9) You may also conduct any other calibrations or performance checks on any equipment or analyzers.

(d) Zero, span, and check for contamination of the NMHC sampling system, as follows:

(1) Select the lowest NMHC analyzer range that can measure the C_3H_8 concentration expected for your CVS and C_3H_8 flow rates.

(2) Zero the NMHC analyzer using zero air introduced at the analyzer port.

(3) Span the NMHC analyzer using C_3H_8 span gas introduced at the analyzer port.

(4) Overflow zero air at the NMHC probe or into a fitting between the NMHC probe and the transfer line.

(5) Measure the stable NMHC concentration of the NMHC sampling system as overflow zero air flows.

(6) If the overflow NMHC concentration exceeds 2 % of the expected C_3H_8 concentration, determine the source of the contamination and take corrective action, such as cleaning the system or replacing contaminated portions. Do not proceed until contamination is eliminated.

(7) If the overflow NMHC concentration does not exceed 2 % of the expected C_3H_8 concentration, record this value as $x_{NMHCpre}$ and use it to correct for NMHC contamination as described in §1065.660.

(e) Perform the propane check as follows:

(1) For batch NMHC sampling, connect clean storage media, such as evacuated bags.

(2) Operate NMHC measurement instruments according to the instrument manufacturer's instructions.

(3) If you choose to correct for dilution air background concentrations of NMHC, measure and record background NMHC.

(4) Zero any integrating devices.

(5) Begin sampling, and start any flow integrators.

(6) Release the contents of the propane reference cylinder and the rate you selected. If you use a reference flow rate C_3H_8, start integrating this flow rate.

(7) Continue to release the cylinder's contents for a duration of time that is at least as long as your shortest test interval for emission testing.

(8) Shut off the C_3H_8 reference cylinder and continue sampling until you have accounted for time delays due to sample transport delays and analyzer response times.

(9) Stop sampling, and stop any integrators.

(f) Perform post-test procedure as follows:

(1) If you used batch sampling, analyze batch samples as soon as practical.

(2) After analyzing NMHC correct for drift, contamination, and background.

(3) Calculate total C_3H_8 mass based on your CVS and NMHC data as described in §1065.650 and §1065.660 using use the molar mass of C_3H_8, M_{C3H8} instead the molar mass of NMHC, M_{NMHC}.

(12) If you use a reference mass, determine the cylinder's post-test weight within ±0.5 %, and determine the C_3H_8 reference mass by subtracting empty cylinder weight from the full cylinder weight.

(4) Subtract the reference C_3H_8 mass from your calculated mass. If this difference is within ±2 % of the reference mass, the CVS passes this check. If not, take corrective action as described in paragraph (a) of this section.

(g) Batch sampler check. You may repeat the C_3H_8 check to check a batch sampler, such as a PM secondary dilution system.

(1) Configure your NMHC sampling system to extract a sample near the location of your batch sampler's storage media (e.g., PM filter). If the absolute pressure at this location is too low to extract an NMHC sample, you may sample NMHC from the batch sampler pump's exhaust. Use caution when sampling from pump exhaust because an acceptable pump leak downstream of a batch sampler flow meter will cause a false failure of the C_3H_8 check.

(2) Repeat the C_3H_8 check described in this section, sampling NMHC from your batch sampler.

(3) Calculate C_3H_8 mass taking into account any secondary dilution from your batch sampler.

(4) Subtract the reference C_3H_8 mass from your calculated mass. If this difference is within ±5 % of the reference mass, the batch sampler passes this check. If not, take corrective action as described in paragraph (a) of this section.

§1065.345 Vacuum-side leak check.

(a) Scope and frequency. Within seven days before each test, check for vacuum-side leaks as described in this section. Check for vacuum-side leaks using one of the following two procedures:

(a) Perform a flow-rate leak-test as follows:

(1) For a given sampling system, seal the probe end of the system by taking one of the following steps:

(i) Cap or plug the end of the sample probe

(ii) Disconnect the transfer line at the probe and cap or plug the transfer line.

(iii) Close a leak-tight valve in line between a probe and transfer line.

(2) Operate each analyzer pump. After stabilizing the system, verify that the flow through each analyzer is less than 0.5 % of the in-use flow rate. You may use nominal analyzer and bypass flows to estimate in-use flow.

(b) Perform an over-flow leak-test as follows:

(1) For a given sampling system, route overflow span gas to one of the following locations in the sampling system:

(i) The end of the sample probe

(ii) Disconnect the transfer line and route to the end of the transfer line.

(iii) A three-way valve installed in-line between a probe and transfer line.

(2) After stabilizing the system, verify that the measured span gas concentration is within the measurement accuracy and repeatability of the analyzer. Note that a measured value lower than expected may be an indication of a leak, but a higher than expected concentration may be an indication of a problem with the span gas or the analyzer itself. A higher than expected concentration does not indicate a leak.

CO AND CO_2 MEASUREMENTS

§1065.350 H_2O interference check for CO_2 NDIR analyzers.

(a) Scope and frequency. If you measure CO_2 using an NDIR analyzer, check for H_2O interference after initial analyzer installation and after any major maintenance.

(b) Measurement principles. H_2O can interfere with an NDIR analyzer's response for CO_2. If your NDIR analyzer uses compensation algorithms that utilize measurements of other gases to meet this interference check, simultaneously conduct such measurements to test the algorithms during the analyzer interference check.

(c) System requirements. A CO_2 NDIR analyzer must have an H_2O interference that is less than 2 % of the lowest flow-weighted average CO_2 concentration expected during testing, though we strongly recommend a lower interference of less than 1 %.

(d) Procedure. Perform the interference check as follows:

(1) Start, operate, zero, and span the CO_2 NDIR analyzer according to the instrument manufacturer's instructions.

(2) Create a water-saturated test gas by bubbling zero air that meets the specifications in §1065.750 through distilled water in a sealed vessel at (25 ± 10) °C.

(3) Upstream of any sample dryer used during testing, introduce the water-saturated test gas.

(4) Allow time for the analyzer response to stabilize. Stabilization time may include time to purge the transfer line and to account for analyzer response.

(5) While the analyzer measures the sample's concentration, record its output for 60 s at a nominal frequency of 5 Hz to record 300 data points. Calculate the arithmetic mean of these 300 points.

(e) If the arithmetic mean of the 300 points is less than 2 % of the flow-weighted average concentration of CO_2 expected at the standard, then the analyzer meets the interference check.

(f) You may use a CO_2 NDIR analyzer that you determine does not meet this performance check, as long as you meet all the following criteria:

(1) You try to correct the problem.

(2) The measurement deficiency does not affect your ability to show that your engines comply with all applicable emission standards.

§1065.355 H_2O and CO_2 interference check for CO NDIR analyzers.

(a) Scope and frequency. If you measure CO using an NDIR analyzer, check for H_2O and CO_2 interference after initial analyzer installation and after any major maintenance.

(b) Measurement principles. H_2O and CO_2 can positively interfere with an NDIR analyzer by causing a response similar to CO. If your NDIR analyzer uses compensation algorithms that utilize measurements of other gases to meet this interference check, simultaneously conduct such measurements to test the algorithms during the analyzer interference check.

(c) System requirements. A CO NDIR analyzer must have combined H_2O and CO_2 interference that is less than 2 % of the flow-weighted average concentration of CO expected at the standard, as measured in paragraph (d) of this section, though we strongly recommend a lower interference of less than 1 %.

(d) Procedure. Perform the interference check as follows:

(1) Start, operate, zero, and span the CO NDIR analyzer according to the instrument manufacturer's instructions.

(2) Create a water-saturated CO_2 test gas by bubbling a CO_2 span gas through distilled water in a sealed vessel at (25 ± 10) °C.

(3) Upstream of any sample dryer used during testing, introduce the water-saturated CO_2 test gas.

(4) Allow time for the analyzer response to stabilize. Stabilization time may include time to purge the transfer line and to account for analyzer response.

(5) While the analyzer measures the sample's concentration, record its output at its nominal frequency to record 300 data points. Calculate the arithmetic mean of these 300 points.

(6) Multiply this mean by the ratio of expected CO_2 to span gas CO_2 concentration. In other words, estimate the flow-weighted average dry concentration of CO_2 expected during testing, and then divide this value by the concentration of CO_2 in the span gas used for this check. Then multiply this ratio by the mean of the 300 values recorded during this check.

(e) If the result of (6) is less than 2 % of the flow-weighted average concentration of CO expected at the standard, then the analyzer meets the interference check.

(f) You may use a CO NDIR analyzer that does not meet this performance check as long as you meet all the following criteria:

(1) You try to correct the problem.

(2) The measurement deficiency does not affect your ability to show that your engines comply with all applicable emission standards.

HYDROCARBON MEASUREMENTS

§1065.360 FID optimization and performance checks.

(a) Scope and frequency. For all FID analyzers, perform the following:

(1) Calibrate a FID upon initial installation and according to good engineering judgment, as described in paragraph (b) of this section. Calibrate on a carbon number basis of one (1), C_1.

(2) Optimize, a FID's response to various hydrocarbons after initial analyzer installation and after any major maintenance, as described in paragraph (c) of this section.

(3) Determine a FID's CH_4 response factor after initial analyzer installation and after any major maintenance as described in paragraph (d) of this section.

(4) Check CH_4 response once every 12 months.

(b) Calibration. Use good engineering judgment to develop a calibration procedure, such as one based on the FID-analyzer manufacturer's instructions and recommended frequency for calibrating the FID. Alternately, you may remove system components for off-site calibration. Calibrate using a C_3H_8, balance synthetic air, calibration gas that meets the specifications of §1065.750. Calibrate on a carbon number basis of one (1), C_1. For example, if you use a C_3H_8 span gas of concentration 200 µmol/mol, span the FID to respond with a value of 600 µmol/mol.

(c) FID Response optimization. Use good engineering judgement for initial instrument start-up and basic operating adjustment using FID fuel and zero air. Heated FIDs must be at their specified operating temperature. Optimize FID response at the operating range expected to be used during emission testing. Optimization involves adjusting flows and pressures to minimize response variations to different hydrocarbon species that are expected to be in the exhaust. Use good engineering judgment to trade off peak FID response to propane-in-air to achieve minimal response variations to different hydrocarbons. A good example of trading off response to propane for relative responses to other hydrocarbon species is given in Society of Automotive Engineers (SAE) Paper No. 770141, "Optimization of Flame Ionization Detector for Determination of Hydrocarbon in Diluted Automotive Exhausts;" author Glenn D. Reschke (incorporated by reference in §1065.1010) . After the optimum flow rates have been determined, record them for future reference.

(d) CH_4 response factor determination. Since FID analyzers generally do not have a 1.00 CH_4 response factor, determine each FID analyzer's CH_4 response factor after FID optimization. Because we do not limit the range of FID analyzer's RF_{CH4}, you must use the most recent RF_{CH4} that you measured according to this section . Use the most recent RF_{CH4} in the calculations for NMHC determination as described in §1065.660. These calculations compensate for CH_4 response. Determine a FID analyzer's response CH_4 factor as follows:

(1) Select a propane (C_3H_8) calibration gas that meets the specifications of §1065.750 and has a concentration typical of the flow-weighted average concentration expected at the hydrocarbon standard. Record the calibration concentration of the gas.

(2) Select a methane (CH_4) calibration gas that meets the specifications of §1065.750 and has a concentration typical of the flow-weighted average concentration expected at the hydrocarbon standard. Record the calibration concentration of the gas.

(3) Start and operate the FID analyzer according to the manufacturer's instructions.

(4) Confirm that the FID analyzer has been calibrated using C_3H_8. Calibrate on a carbon number basis of one (1), C_1. For example, if you use a C_3H_8 span gas of concentration 200 µmol/mol, span the FID to respond with a value of 600 µmol/mol.

(5) Zero the FID with zero air that meets the specifications of §1065.750.

(6) Span the FID with the calibration gas that you selected in paragraph (d)(1) of this section.

(5) Introduce at the inlet of the FID analyzer the CH_4 calibration gas that you selected in paragraph (d)(2) of this section.

(6) Allow time for the analyzer response to stabilize. Stabilization time may include time to purge the analyzer and to account for its response.

(7) While the analyzer measures the CH_4 concentration, record its output for 60 s at a nominal frequency of 5 Hz to record 300 data points. Calculate the arithmetic mean of these 300 points.

(8) Divide the mean measured concentration by the recorded calibration concentration of the CH_4 calibration gas. The result is the FID analyzer's response factor for CH_4, RF_{CH4}.

(e) FID CH_4 response check. Check the FID CH_4 response by performing the following:

(1) Perform the CH_4 response factor determination as described in paragraph (d) of this section.

(2) If the CH_4 response factor is within ±5 % of its most recently determined value, the FID passes the FID flow check.

(3) If the FID does not pass this check, first verify that the pressures and flow rates of FID fuel, burner air, and sample are each within ±0.5 % of their most recently recorded values. These values are recorded each time you

conduct a FID response optimization as described in paragraph (c) of this section. You may adjust these flows as necessary.

(4) Repeat the CH_4 response factor determination as described in paragraph (d) of this section.

(5) If the pressures and/or flows are correct, but the CH_4 response factor is not within ±5 % of its most recently determined value, then repeat the FID response optimization as described in paragraph (c) of this section.

(6) Repeat the CH_4 response factor as described in paragraph (d) of this section.

(7) Use this CH_4 response factor, RF_{CH4}, in the calculations for NMHC determination as described in §1065.660.

§1065.362 Raw exhaust FID O_2 interference check.

(a) Scope and frequency. If you use a FID analyzer for raw exhaust measurements, perform an O_2 interference check upon initial installation and after major maintenance.

(b) Measurement principles. Changes in O_2 concentration in raw exhaust can affect FID response by changing FID flame temperature. Optimize FID fuel, burner air, and sample flow to meet this check.

(c) System requirements. Your FID must meet the O_2 interference check according to ISO 8178-1, Section 8.8.3 (incorporated by reference in §1065.1002).

§1065.365 Nonmethane cutter penetration fractions determination.

(a) Scope and frequency. If you use a FID analyzer and a nonmethane cutter to measure methane (CH_4), determine the nonmethane cutter's penetration fractions of CH_4, PF_{CH4} and ethane, PF_{C2H6} as described in this section. Perform this check after installing the nonmethane cutter, and within six months after the previous check. This check must be repeated within six months of the check to verify that the catalytic activity of the cutter has not deteriorated.

(b) Measurement principles. A nonmethane cutter removes nonmethane hydrocarbons from the exhaust stream before the FID analyzer measures hydrocarbon concentrations. An ideal nonmethane cutter would have PF_{CH4} of 1.000, and the penetration fraction for all other hydrocarbons would be 0.000, as represented by PF_{C2H6}. The emission calculations in §1065.660 use the actual measured values of PF_{CH4} and PF_{C2H6} to account for less than ideal nonmethane cutter performance.

(c) System requirements. We do not limit penetration fractions to a certain range. However, we do recommend that you optimize a nonmethane cutter by adjusting its catalyst temperature to achieve $PF_{CH4}>0.9$ and $PF_{C2H6}<0.1$ as determined by paragraph (d) of this section. If we use a nonmethane cutter for testing, it will meet this recommendation. If adjusting catalyst temperature does not result in achieving both of these specifications simultaneously, we recommend that you replace the catalyst. Use the most recently determined penetration values from this section to calculate the concentration of NMHC, x_{NMHC} as described in §1065.660.

(d) Procedure. Determine penetration fractions as follows:

(1) Select CH_4 and C_2H_6 analytical gas mixtures that meet the specifications of §1065.750 with concentrations typical of the flow-weighted average concentrations expected at the hydrocarbon standard.

(2) Start and operate the nonmethane cutter according to the manufacturer's instructions.

(3) Confirm that the FID analyzer meets all of the specifications of §1065.360.

(4) Start and operate the FID analyzer according to the manufacturer's instructions.

(5) Connect the FID analyzer to the outlet of the nonmethane cutter.

(6) Introduce the CH_4 analytical gas mixture upstream of the nonmethane cutter.

(7) Allow time for the analyzer response to stabilize. Stabilization time may include time to purge the nonmethane cutter and to account for its response.

(8) While the analyzer measures the sample's concentration, record its output for 60 s at a nominal frequency of 5 Hz to record 300 data points. Calculate the arithmetic mean of these 300 points.

(9) Reroute the flow path to bypass the nonmethane cutter and repeat the steps in paragraphs (d)(6) through (d)(8) of this section.

(10) Divide the mean concentration measured through the nonmethane cutter by the mean concentration measured after bypassing the nonmethane cutter. The result is the CH_4 penetration fraction (PF_{CH4})

(11) Repeat steps in paragraphs (b)(6) through (b)(10) of this section but with the C_2H_6 analytical gas mixture instead of the CH_4 analytical gas mixture. The result is the C_2H_6 penetration fraction (PF_{C2H6}).

NO_x MEASUREMENTS

§1065.370 CLD CO_2 and H_2O quench check.

(a) Scope and frequency. If you use a CLD analyzer to measure NO_x, check for H_2O and CO_2 quench after installing the CLD analyzer and after performing major maintenance.

(b) Measurement principles. H_2O and CO_2 can negatively interfere with a CLD's NO_x response by collisional quenching, which inhibits the chemiluminescent reaction that a CLD utilizes to detect NO_x. The calculations in §1065.672 that are used to determine H_2O quench account for the water vapor in humidified NO span gas. The procedure and the calculations scale the quench results to the water vapor and CO_2 concentrations expected during testing. If your CLD analyzer uses quench compensation algorithms that utilize H_2O and/or CO_2 measurement instruments, use these instruments to measure H_2O and/or CO_2 and evaluate quench with the compensation algorithms applied.

(c) System requirements. A CLD analyzer must have a combined H_2O and CO_2 quench of less than ±2 %, though we strongly recommend a quench of ± 1 %. Combined quench is the sum of the CO_2 quench determined as described in paragraph (d) of this section, plus the H_2O quench determined as described in paragraph (e) of this section.

(d) CO_2 quench-check procedure. Use the following method to determine CO_2 quench, or use good engineering judgment to develop a different protocol:

(1) Use PTFE tubing to make necessary connections.

(2) Connect a pressure-regulated CO_2 span gas to one of the inlets of a three-way valve made of 300 series stainless steel. Use a CO_2 span gas that meets the specifications of §1065.750 and has a concentration that is approximately twice the maximum CO_2 concentration expected during testing, if available.

(3) Connect a pressure-regulated purified N_2 gas to the valve's other inlet. Use a purified N_2 gas that meets the specifications of §1065.750.

(4) Connect the valve's single outlet to the balance-gas port of a gas divider that meets the specifications in §1065.248.

(5) Connect a pressure-regulated NO span gas to the span-port of the gas divider. Use an NO span gas that meets the specifications of §1065.750. Attempt to use an NO concentration that is approximately twice the maximum NO concentration expected during testing,

(6) Configure the gas divider such that nearly equal amounts of the span gas and balance gas are blended with each other. Apply viscosity corrections as necessary to appropriately to ensure correct gas divider operation.

(7) While flowing balance and span gases through the gas divider, stabilize the CO_2 concentration downstream of the gas divider and measure the CO_2 concentration with an NDIR analyzer that has been prepared for emission testing. Record this concentration, x_{CO2} and use it in the quench check calculations in §1065.672.

(8) Measure the NO concentration downstream of the gas divider. If your CLD has an operating mode in which it detects only NO, as opposed to total NO_x, operate the CLD in that operating mode. Record this concentration, x_{NO+CO2}, and use it in the quench check calculations in §1065.672.

(9) Switch the three-way valve so that 100 % purified N_2 flows to the gas divider's balance-port inlet. Monitor the CO_2 at the gas divider's outlet until its concentration stabilizes at zero.

(10) Measure NO concentration at the gas divider's outlet. Record this value, x_{NO+N2}, and use it in the quench check calculations in §1065.672.

(11) Calculate CO_2 quench as described in §1065.672.

(e) H_2O quench check procedure.

(1) For a CLD analyzer equipped with a sample dryer, as described in §1065.145(d)(2)), you may assume an H_2O quench value of 0 % if you can show that the dryer maintains less than 4 °C dewpoint at its outlet when it receives at its inlet the maximum dewpoint expected during testing. Determine dewpoint as described in §1065.145(d)(2)).

(2) For a CLD analyzer without a dryer, take the following steps to determine H_2O quench:

(i) If your CLD has an operating mode in which it detects only NO, as opposed to total NO_x, operate the CLD in that operating mode.

(ii) Measure an NO calibration span gas that meets the specifications of §1065.750 and is near the maximum concentration expected at the standard. Record this concentration, x_{NOdry}.

(ii) Bubble the same NO gas through distilled water in a sealed vessel at (25 ±10) °C. Record the vessel water temperature, T_{sat} and pressure, P_{sat}. To prevent subsequent condensation, make sure the humidified sample will not be exposed to temperatures lower than T_{sat} during transport from the sealed vessel's outlet to the CLD. We recommend heated transfer lines.

(iii) Use the CLD to measure the NO concentration of the humidified span gas and record this value, x_{NOwet}.

(iv) Use the recorded values from this paragraph (e) to calculate the H_2O quench as described in §1065.672.

(f) If the sum of the H_2O quench plus the CO_2 quench is not less than 2 %, take corrective action by repairing or replacing the analyzer. Before using a CLD for emission testing, demonstrate that the corrective action resulted in less than 2 % combined quench.

§1065.372 NDUV analyzer NMHC and H_2O interference check.

(a) Scope and frequency. If you measure NO_x using an NDUV analyzer, check for H_2O and hydrocarbon interference after initial analyzer installation and after any major maintenance.

(b) Measurement principles. Hydrocarbons and H_2O can positively interfere with an NDUV analyzer by causing a response similar to NO_x. If your NDUV analyzer uses compensation algorithms that utilize measurements of other gases to meet this interference check, simultaneously conduct such measurements to test the algorithms during the analyzer interference check.

(c) System requirements. A NO_x NDUV analyzer must have combined H_2O and hydrocarbon interference that is less than ±2 % of the flow-weighted average concentration of NO_x expected at the standard, as measured in paragraph (d) of this section, though we strongly recommend a lower interference of less than ±1 %.

(d) Procedure. Perform the interference check as follows:

(1) Start, operate, zero, and span the NO_x NDUV analyzer according to the instrument manufacturer's instructions.

(2) We recommend that you extract engine exhaust to perform this check. Use a CLD that meets the specifications of subpart C of this part to quantify NO_x in the exhaust. Use the CLD response as the reference value. Also measure NMHC in the exhaust with a FID analyzer that meets the specifications of subpart C of this part. Use the FID response as the measured hydrocarbon value.

(3) Upstream of any sample dryer used during testing, introduce the engine exhaust to the NDUV analyzer.

(4) Allow time for the analyzer response to stabilize. Stabilization time may include time to purge the transfer line and to account for analyzer response.

(5) While all analyzers measure the sample's concentration, record 300 data points, and calculate the arithmetic means for the three analyzers.

(6) Subtract the CLD mean from the NDUV mean.

(7) Multiply this difference by the ratio of the flow-weighted average NMHC concentration expected at the standard to the NMHC concentration measured during the performance check.

(e) If the result of (7) is less than ±2 %, then the analyzer meets this interference check.

(f) You may use a NO_x NDUV analyzer that demonstrates ±2 % or greater H_2O interference as long as you meet all the following criteria:

(1) You try to correct the problem.

(2) The measurement deficiency does not affect your ability to show that your engines comply with all applicable emission standards.

§1065.374 ZrO_2 NO_x analyzer NH_3 interference and NO_2 response checks.

(a) Scope and frequency. If you use a ZrO_2 analyzer to measure NO_x, check for ammonia interference, NO_2 response, and operation under fuel rich conditions after installing the ZrO_2 analyzer and after major maintenance

(b) Measurement principles. Ammonia (NH_3) can positively interfere with a ZrO_2 analyzer by causing a response similar to NO_x . If your ZrO_2 analyzer uses compensation algorithms that utilize measurements of other gases to meet this interference check, use those analyzers during the NH_3 interference check. Because of the catalytic reactions required for NO_x measurement via ZrO_2 analyzers, we specify an NO_2 response factor tolerance and an operational check under net fuel-rich exhaust conditions.

(c) System requirements. A ZrO_2 analyzer must have an NH_3 interference less than 2 % of the flow-weighted average concentration of NO_x expected at the standard, though we strongly recommend a lower interference of less than 1 %. A ZrO_2 analyzer must also have an NO_2 response factor, RF_{NO2} of at least 0.95, but not more than 1.05, as measured in paragraph (e) of this section.

(d) Ammonia interference check. Check for ammonia interference as follows:

(1) Start, operate, zero, and span the NO_x ZrO_2 analyzer according to the instrument manufacturer's instructions.

(2) Select an NH_3 span gas that meets the specifications of §1065.750.

(3) Introduce the NH_3 span gas at the inlet to the analyzer.

(4) Allow time for the analyzer response to stabilize. Stabilization time may include time to purge the transfer line and to account for analyzer response.

(5) While the analyzer measures the sample's concentration, record its output at its nominal frequency to record 300 data points. Calculate the arithmetic mean of these 300 points.

(6) Multiply this mean by the ratio of expected NH_3 to span gas NH_3 concentration. In other words, estimate the flow-weighted average dry concentration of NH_3 expected during testing, and then divide this value by the concentration of NH_3 in the span gas used for this check. Then multiply this ratio by the mean of the 300 values recorded during this check.

(e) If the result of (d)(6) is less than 2 % of the flow-weighted average concentration of NO_x expected at the standard, then the analyzer meets the interference check.

(f) You may use a NO_x ZrO_2 analyzer that does not meet this performance check as long as you meet all the following criteria:

(1) You try to correct the problem.

(2) The measurement deficiency does not affect your ability to show that your engines comply with all applicable emission standards.

(g) NO_2-response check. Check for NO_2 response as follows:

(1) Select an NO_2 calibration gas that meets the specifications of §1065.750. Record the calibration concentration of the gas.

(2) Start, operate, zero, and span the ZrO_2 analyzer according to the manufacturer's instructions.

(3) Introduce the NO_2 calibration gas at the inlet of the ZrO_2 analyzer, and if you use an NO_2 to NO converter upstream of the analyzer during emission testing, introduce the NO_2 upstream of the NO_2 to NO converter.

(4) Allow time for the analyzer response to stabilize. Stabilization time may include time to purge the analyzer and to account for detector response.

(5) While the analyzer measures the sample's concentration, record its output at its nominal frequency to record 300 data points. Calculate the arithmetic mean of these 300 points.

(6) Divide the mean measured value by the recorded calibration concentration of the NO_2 calibration gas. The result is the ZrO_2 analyzer's response factor for NO_2.

(g) If the NO_2 response factor is less than 0.95 or greater than 1.05, take corrective action by repairing or replacing the analyzer.

(h)Before using a ZrO_2 analyzer for emission testing, demonstrate that the corrective action resulted in an NO_2 response factor of at least 0.95. Corrective action may include adding an NO_2 to NO converter to your emission testing system.

(i) You may use a NO_x ZrO_2 analyzer that has an NO_2 response factor greater than 1.05 as long as you meet all the following criteria:

(1) You try to correct the problem.

(2) The measurement deficiency does not affect your ability to show that your engines comply with all applicable emission standards.

(j) <u>Oxygen debt check</u>. If you use a NO_x ZrO_2 analyzer in exhaust that has oxygen, then you do not have to perform this check. However, if you use a NO_x ZrO_2 analyzer in exhaust that has no oxygen and some CO and hydrocarbons, then perform this check as follows:

(1) Start, operate, zero, and span the NO_x ZrO_2 analyzer according to the instrument manufacturer's instructions using a span gas that contains only NO and a balance gas. The span gas must not contain CO or hydrocarbons.

(2) Select a tri-blend span gas of NO, CO and C_3H_8 that meets the specifications of §1065.750, and record the NO concentration.

(3) Introduce the tri-blend span gas at the inlet to the analyzer.

(4) Allow time for the analyzer response to stabilize. Stabilization time may include time to purge the transfer line and to account for analyzer response.

(5) While the analyzer measures the sample's concentration, record its output at its nominal frequency to record 300 data points. Calculate the arithmetic mean of these 300 points.

(g) If the mean calculated in paragraph (j)(5) of this section is not within ±2 % of the tri-blend NO concentration, take corrective action by repairing or replacing the analyzer, or do not use it to measure NO_x in exhaust with an oxygen debt (i.e., net fuel-rich exhaust).

(h) Before using a ZrO_2 analyzer for emission testing in exhaust that has an oxygen debt, demonstrate that corrective action resulted in an oxygen debt check that returns a mean in paragraph (j)(5) of this section of at least 98 % of the tri-blend NO concentration.

(i) You may use a NO_x ZrO_2 analyzer for emission testing in exhaust that has an oxygen debt if the mean in paragraph (j)(5) of this section is greater than 102 % of the tri-blend NO concentration as long as you meet all the following criteria:

(1) You try to correct the problem.

(2) The measurement deficiency does not affect your ability to show that your engines comply with all applicable emission standards.

§1065.376 Chiller NO_2 penetration.

(a) Scope and frequency. If you use a chiller to dry a sample upstream of a NO_x measurement instrument, but you don't use an NO_2 to NO converter upstream of the chiller, you must perform this check. Perform this check after initial installation and after major maintenance.

(b) Measurement principles. A chiller removes water, which can otherwise interfere with a NO_x measurement. However, liquid water in an improperly designed chiller can remove NO_2 from the sample. Therefore, if a chiller is used without an NO_2 to NO converter upstream, it could remove NO_2 from the sample prior to NO_x measurement.

(c) System requirements. An chiller must meet the following performance check so that at least 95 % of the total NO_x is measured at the lowest expected NO/NO_x fraction.

(d) Procedure. Use the following procedure to check the performance of your chiller.

(1) Instrument setup. Follow the analyzer and chiller manufacturers' start-up and operation instructions. Adjust the analyzer and chiller as needed to optimize performance.

(2) Equipment setup. Connect an ozonator's inlet to a zero air source and connect its outlet to one port of a 3-way tee fitting. Connect an NO span gas to another port of the tee. Connect a heated line at 100 °C to the last port, and connect a heated 3-way tee to the other end of the line. Connect a dewpoint generator set at a dewpoint of 50 °C to one end of a heated line at 100 °C. Connect the other end of the line to the heated tee, and connect a third 100 °C heated line to the chiller inlet. Provide an overflow vent line at the chiller inlet.

(3) For the steps in paragraphs (d)(4) through (7) of this section, set your analyzer to measure only NO (e.g., NO mode), or only read the NO channel of your analyzer.

(4) Initial NO_x adjustment. With the dewpoint generator and the ozonator off, adjust the NO and zero gas flows so that the NO concentration at the analyzer is at 2 times the peak total NO_x concentration expected during testing. Verify that gas is flowing out of the overflow vent line.

(5) Total NO_x adjustment. Turn on the dewpoint generator and adjust its flow so that the NO concentration at the analyzer is at the peak total NO_x concentration expected during testing. Verify that gas is flowing out of the overflow vent line.

(6) NO/NO_x adjustment. Turn on the ozonator and adjust the ozonator so that the NO concentration measured by the analyzer decreases to represent the minimum NO/NO_x fraction expected during testing. Calculate this fraction as the NO concentration with the ozonator on divided by the NO concentration with the ozonator off. Determine your expected minimum fraction from previous emission tests or estimate it based on good engineering judgment. For example, for a stoichiometric spark-ignition engine, this minimum fraction may be (90 to 95) % NO/NO_x; for a compression-ignition engine, this minimum fraction may be (65 to 85) % NO/NO_x. In the case of a compression-ignition engine with an NO_2 storage and reduction aftertreatment system, this ratio may be (0 to 10) % NO/NO_x.

(7) If you can not adjust the ozonator to achieve the expected minimum NO/NO_x fraction, select a higher concentration NO span gas and repeat steps (3) through (6). This will increase the amount of zero air flow to the ozonator. If this solution does not work, you may substitute the zero air with purified O_2.

(8) Data collection. Maintain the ozonator adjustment in paragraph (d)(6) of this section, but turn off power to the ozonator.

(i) Switch the analyzer to measure total NO_x (NO_x mode) or measure NO_x as the sum of your analyzer NO and NO_2 readings.

(ii) Allow for stabilization, accounting for transport delays and instrument response.

(iii) Calculate the mean of 25 samples from the analyzer and record this value as NO_{xref}.

(iv) Turn on the ozonator and allow for stabilization, accounting for transport delays and instrument response.

(v) Calculate the mean of 25 samples from the analyzer and record this value as NO_{xmeas}.

(vi) Switch the ozonator off.

(vii) Repeat steps (i) through (vi) to record seven values of NO_{xref} and seven values of NO_{xmeas}.

(9) Performance evaluation. Calculate the means of the NO_{xref} and NO_{xmeas} values. Divide the mean NO_{xmeas} by the mean NO_{xref}. If the result is less than 95 %, repair or replace the chiller.

§1065.378 NO_2-to-NO converter conversion check.

(a) Scope and frequency. If you use an analyzer that measures only NO to determine NO_x, you must use an NO_2 to NO converter upstream of the analyzer. Perform this check after installing the converter and within six months after the last check. This check must be repeated within six months of the check to verify that the catalytic activity of the NO_2 to NO converter has not deteriorated.

(b) Measurement principles. An NO_2 to NO converter allows an analyzer that measures only NO to determine total NO_x by converting the NO_2 in exhaust to NO.

(c) System requirements. An NO_2-to-NO converter must meet the following performance check so that at least 95 % of the total NO_x is measured at the lowest expected NO/NO_x fraction.

(d) Procedure. Use the following procedure to check the performance of your NO_2 to NO converter.

(1) Instrument setup. Follow the analyzer and NO_2 to NO converter manufacturers' start-up and operation instructions. Adjust the analyzer and converter as needed to optimize performance.

(2) Equipment setup. Connect an ozonator's inlet to a zero air source and connect its outlet to one port of a 4-way cross fitting. Connect an NO span gas to another port of the cross. Connect the NO_2 to NO converter inlet to another port, and connect an overflow vent line to the last port.

(3) Total NO_x adjustment. With the NO_2 to NO converter in the bypass mode (e.g., NO mode) and the ozonator off, adjust the NO and zero gas flows so that the NO concentration at the analyzer is at the peak total NO_x concentration expected during testing. Verify that gas is flowing out of the overflow vent.

(4) NO/NO_x adjustment. With the NO_2 to NO converter still in the bypass mode, turn on the ozonator and adjust the ozonator so that the NO concentration measured by the analyzer decreases to represent the minimum NO/NO_x fraction expected during testing. Calculate this fraction as the NO concentration with the ozonator on divided by the NO concentration with the ozonator off. Determine your expected minimum fraction from previous emission tests or estimate it based on good engineering judgment. For example, for a stoichiometric spark-ignition engine, this minimum fraction may be (90 to 95) % NO/NO_x; for a compression-ignition engine, this minimum fraction may be (65 to 85) % NO/NO_x. In the case of a compression-ignition engine with an NO_2 storage and reduction aftertreatment system, this ratio may be (0 to 10) % NO/NO_x.

(5) If you can not adjust the ozonator to achieve the expected minimum NO/NO_x fraction, select a higher concentration NO span gas and repeat steps (3) and (4). This will increase the amount of zero air flow to the ozonator. If this solution does not work, you may substitute the zero air with purified O_2.

(6) Data collection. Maintain the ozonator adjustment in paragraph (d)(4) of this section, but turn off power to the ozonator. Switch the NO_2 to NO converter from bypass mode to sample mode (e.g., NO_x mode) so that the sample flows through the converter to the analyzer.

(i) Allow for stabilization, accounting only for transport delays and instrument response.

(ii) Calculate the mean of 25 samples from the analyzer and record this value as NO_{xref}.

(iii)Turn on the ozonator and allow for stabilization, accounting only for transport delays and instrument response. Do not allow extra stabilization time to account for NO_2 to NO converter response.

(iv) Calculate the mean of 25 samples from the analyzer and record this value as NO_{xmeas}.

(v) Switch the ozonator off.

(vi) Repeat the steps in paragraphs (d)(6)(i) through (v) of this section to record seven values of NO_{xref} and seven values of NO_{xmeas}.

(7) Performance evaluation. Calculate the means of the NO_{xref} and NO_{xmeas} values. Divide the mean NO_{xmeas} by the mean NO_{xref}. If the result is less than 95 %, repair or replace the NO_2 to NO converter.

§1065.390 PM balance and weighing process performance check.

(a) Scope and frequency. If you measure PM, check the balance performance and the PM weighing environment as described in this section within 12 h before weighing.

(b) Measurement principles. You must check balance performance by zeroing and spanning it. Use calibration weights that meet the specifications in §1065.790 to perform this check. You must also check the PM-weighing environment and weighing process to make sure it has not been compromised by improper balance operation, environmental contamination, or some other problem with the weighing process.

(c) System requirements. Zero and span the balance. The reference sample weighing procedure described in paragraph (f) of this section must return a change in the reference samples' mean mass of no more than ±10 % of the net PM mass expected at the standard or ±10 µg, whichever is higher, and ±10 µg if the expected PM mass at the standard is not known. For example, a central PM weighing lab might not have information about an applicable standard, the amount of exhaust dilution, and the amount of exhaust sampled to determine an expected value. If the reference sample weighing procedure exceeds this threshold, invalidate all PM results that were sampled after the last time the reference sample weighing procedure was within these specifications.

(d) Procedure for checking balance performance. If you normally use average values by repeating the weighing process to improve the accuracy and precision of PM measurements, use the same process to check balance performance using either of the following procedures. Use an automated procedure to check balance performance if it meets the intent described in paragraph (b) of this section. Otherwise use a manual procedure in which you zero the balance and span the balance with a calibration weight.

(f) Procedure for checking reference sample weighing procedures. Check the reference sample weighing procedure as follows:

(1) Keep at least two unused PM sample media in the PM-stabilization environment for use as reference samples. If you collect PM with filters, select unused filters of the same medium and size for use as reference samples. You may periodically replace reference samples, using good engineering judgment.

(2) Stabilize reference samples. Consider reference samples stabilized if they have been in the PM-stabilization environment for a minimum of 30 min, and the PM-stabilization environment has been within the specifications of §1065.190(c) for at least the preceding 30 min.

(3) Exercise the balance several times with a reference sample. We recommend weighing ten samples without recording values.

(4) Zero and span the balance.

(5) Weigh each of the reference samples and record the arithmetic mean of their masses. We recommend using substitution weighing as described in §1065.590(h). You may repeat weighing to improve accuracy and precision.

(6) Record the balance environment dewpoint, ambient temperature, and barometric pressure.

(7) Use the recorded ambient conditions to correct results for buoyancy as described in §1065.690. Record the buoyancy-corrected mean mass of the reference samples.

(8) Quantify the mean mass change of reference samples by subtracting the buoyancy-corrected mean mass from the corresponding value from the last time you checked PM weighing procedures under this paragraph (e).

(g) If the reference samples' mean mass changes by more than 10 % of the net PM mass expected at the standard or by ±10 µg, whichever is greater, invalidate all PM results that were sampled after the last time the reference sample weighing procedure was within this specification. Before using a balance for emission testing, replace reference samples and establish their mean mass.

Subpart E— Engine Selection, Preparation, and Maintenance

§1065.401 Test engine selection.

While all engine configurations within a certified engine family must comply with the applicable standards in the standard-setting part, you need not test each configuration for certification.

(a) Select an engine configuration within the engine family for testing, as follows:

(1) Test the engine that we specify, whether we issue general guidance or give you specific instructions.

(2) If we do not tell you which engine to test, follow any instructions in the standard-setting part.

(3) If we do not tell you which engine to test and the standard-setting part does not include specifications for selecting test engines, use good engineering judgment to select the engine configuration within the engine family that is most likely to exceed an emission standard.

(b) In the absence of other information, the following characteristics are appropriate to consider when selecting the engine to test:

(1) Maximum fueling rates.

(2) Maximum loads.

(3) Maximum in-use speeds.

(4) Highest sales volume.

(c) We may select any engine configuration within the engine family for our testing.

§1065.405 Test engine preparation and maintenance.

(a) If you are testing an emission-data engine for certification, make sure it is built to represent production engines.

(b) Run the test engine, with all emission-control systems operating, long enough to stabilize emission levels. If you accumulate 50 h of operation for a spark-ignition engine or 125 h for a compression-ignition engine, you may consider emission levels stable without measurement. If the engine needs more operation to stabilize emission levels, record your reasons and the methods for doing this, and give us these records if we ask for them. You may also use the provisions of §1065.10 to request a shorter period of engine operation at which emission levels may be considered stable without measurement.

(c) Do not service the test engine before you stabilize emission levels, unless we approve such maintenance in advance. This prohibition does not apply to your recommended oil and filter changes for newly produced engines, or to idle-speed adjustments.

(d) For accumulating operating hours on your test engines, select engine operation that represents normal in-use operation for the engine family.

(e) If your engine will be used in a vehicle equipped with a canister for storing evaporative hydrocarbons for eventual combustion in the engine, attach a canister fully loaded with fuel vapors before running a test. Connect the canister's purge port to the engine and plug the canister port that is normally connected to the fuel tank. Use a canister and plumbing arrangement that represents the in-use configuration of the largest capacity in all expected applications. You may request to omit using an evaporative canister during testing if you can show that it would not affect your ability to show compliance with the applicable emission standards. You do not have to accumulate engine operation with an installed canister.

§1065.410 Maintenance limits for stabilized test engines.

(a) After you stabilize the test engine's emission levels, you may do maintenance, other than during emission testing, as the standard-setting part specifies. However, you may not do any maintenance based on emission measurements from the test engine.

(b) Other than critical emission-related maintenance, you specify in your application for certification, you must completely test an engine for emissions before and after doing any maintenance that might affect emissions, unless we waive this requirement.

(c) Unless we approve otherwise in advance, you may not use equipment, instruments, or tools to identify bad engine components unless you specify they should be used for scheduled maintenance on production engines. In this case, if they are not generally available, you must also make them available at dealerships and other service outlets.

(d) You may adjust, repair, disassemble, or replace the test engine only with our approval. We may approve these steps if all the following occur:

(1) Something clearly malfunctions—such as persistent misfire, engine stall, overheating, fluid leaks, or loss of oil pressure—and needs maintenance or repair.

(2) You provide us an opportunity to verify the extent of the malfunction before you do the maintenance.

(e) If we determine that a part failure, system malfunction, or associated repairs have made the engine's emission controls unrepresentative of production engines, you may no longer use it as a test engine. Also, if your test engine has a major mechanical failure that requires you to take it apart, you may no longer use it as a test engine.

§1065.415 Durability demonstration.

If the standard-setting part requires durability testing, you must accumulate service in a way that represents how you expect the engine to operate in use. You may accumulate service hours using an accelerated schedule, such as through continuous operation.

(a) Maintenance. The following limits apply to the maintenance that we allow you to do on a test engine:

(1) You may perform scheduled maintenance that you recommend to operators, but only if it is consistent with the standard-setting part's restrictions.

(2) You may perform additional maintenance only as specified in §1065.410(b).

(b) Emission measurements. Perform emission tests following the provisions of this part and the standard-setting part. Perform emission tests to determine deterioration factors consistent with good engineering judgment. Evenly space any tests between the first and last test points throughout the durability period, unless we approve otherwise.

Subpart F— Running an Emission Test in the Laboratory

§1065.501 Overview.

(a) Use the procedures detailed in this subpart to measure engine emissions in a laboratory by performing the following tasks:

(1) Map your engine by recording specified torque and speed data.

(2) Use your engine map to transform normalized duty cycles into reference duty cycles for your engine.

(3) Prepare your engine, equipment, and measurement instruments for an emission test.

(4) Perform pre-test procedures to verify proper operation of certain equipment and analyzers.

(5) Record pre-test data.

(6) Start or restart the engine and sampling systems.

(7) Sample emissions throughout the duty cycle.

(8) Record post-test data.

(9) Perform post-test procedures to verify proper operation of certain equipment and analyzers.

(b) The general test consists of a duty cycle made of one or more of the following segments (check the standard-setting part for specific duty cycles):

(1) Either a cold-start transient cycle where you measure emissions, or a warm-up cycle where you do not measure emissions. Transient testing consists of a sequence of target values for speed and torque that change continuously throughout the duty cycle.

(2) A hot-start transient test. Some duty cycles may omit engine starting from the "hot-start" cycle.

(3) A steady-state test with a warmed-up engine. Steady-state tests may involve discrete-mode testing or ramped-modal testing. Discrete-mode testing consists of a series of discrete test modes with engine operation stabilized at fixed speeds and torques, with separate emission measurements for each mode. Ramped-modal testing consists of a continuous time trace that includes a series of stable operating modes connected by defined transitions, with a single emission measurement for the whole cycle.

(c) Other subparts in this part identify how to select and prepare an engine for testing (subpart E), perform the required engine service accumulation (subpart E), and calculate emission results (subpart G).

(d) Subpart J of this part describes how to perform field testing.

§1065.510 Engine mapping.

(a) Scope and frequency. An engine map is a data set that consists of a series of paired values for engine speed and maximum brake torque. Map your engine while it is connected to a dynamometer. Use the most recent engine map to transform a normalized duty cycle from the standard-setting part to a reference duty cycle specific to your engine. Normalized duty cycles are specified in the standard-setting part. Map or re-map an engine before a test if any of the following apply:

(1) You have not performed an initial engine map.

(2) The barometric pressure near the engine's air inlet is not within 5 % of the barometric pressure recorded at the time of the last engine map.

(3) The engine or emission-control system has undergone changes that might affect maximum torque performance.

(4) You capture an incomplete map on your first attempt or you do not complete a map within the specified time tolerance. You may repeat mapping as necessary to capture a complete map within the specified time.

(5) You may update an engine map at any time by repeating the engine-mapping procedure.

(b) Mapping variable-speed engines. Map variable-speed engines as follows:

(1) Record the barometric pressure.

(2) Warm up the engine by operating it at any speed and at approximately 75 % of the engine's expected maximum power until either the engine coolant's temperature or block absolute temperature is within ±2 % of its mean value for at least 2 min or until the engine thermostat controls engine temperature.

(3) Operate the engine at its warm, no-load idle speed.

(4) Set operator demand to maximum and control engine speed at (95 ±1) % of its warm, no-load idle speed for at least 15 s. For engines with reference duty cycles whose lowest speed is greater than warm, no-load idle speed, you may start the map at (95 ±1) % of the lowest reference speed.

(5) Perform one of the following:

(i) For any naturally aspirated engine or for any engine subject only to steady-state duty cycles, you may map it at discrete speeds by selecting at least 20 evenly spaced setpoints between warm, no-load idle and the highest speed above maximum mapped power at which (50 to 75) % of maximum power occurs. At each setpoint, stabilize speed and allow torque to stabilize. Record the average speed and torque at each setpoint. We recommend that you stabilize an engine for at least 15 s at each setpoint and record the average feedback speed and torque of the last (4 to 6) s. Use linear interpolation to determine intermediate speed and torque values.

(ii) For any variable-speed engine, you may map it by using a continuous sweep of speed by continuing to record the mean feedback speed and torque at 1 Hz or more frequently and increasing speed at a constant

rate such that it takes (4 to 6) min to sweep from 95 % of warm, no-load idle to the highest speed above maximum power at which (50 to 75) % of maximum power occurs. Stop recording after you complete the sweep. From the series of mean speed and maximum torque values, use linear interpolation to determine intermediate values. Use this series of speed and torque values to generate the power map as described in paragraph (e) of this section.

(c) Negative torque mapping. If your engine is subject to a reference duty cycle that specifies negative torque values, generate a motoring map by any of the following procedures:

(1) Multiply the positive torques from your map by -40 %. Use linear interpolation to determine intermediate values.

(2) Map the amount of negative torque required to motor the engine by repeating paragraph (c) of this section without fuel, or with minimum operator demand if operating without fuel would damage the engine.

(3) Determine the amount of negative torque required to motor the engine at the following two points: at warm, no-load idle and at the highest speed above maximum power at which (50 to 75) % of maximum power occurs. Operate the engine without fuel, or with minimum operator demand if operating without fuel would damage the engine. Use linear interpolation to determine intermediate values.

(d) Mapping constant-speed engines. For constant-speed engines, generate a map as follows:

(1) Record the barometric pressure.

(2) Warm up the engine by operating it at any speed and at approximately 75 % of the engine's expected maximum power until either the engine coolant's temperature or block absolute temperature is within ±2 % of its mean value for at least 2 min or until the engine thermostat controls engine temperature.

(3) You may operate the engine with a production constant-speed governor or simulate a constant-speed governor by controlling engine speed with an operator demand control system described in §1065.110. The installed governor may be an isochronous or a speed-droop governor.

(4) With the governor or simulated governor controlling speed via operator demand, operate the engine at no-load governed speed (at high speed, not low idle) for at least 15 s.

(5) Record mean feedback speed and torque at 1 Hz or more frequently and use the dynamometer to increase torque at a constant rate. Unless the standard setting part specifies otherwise, complete the map such that it takes (2 to 4) min to sweep from no-load governed speed to the lowest speed below maximum mapped power at which the engine develops (85-95) % of maximum mapped power. You may map your engine to lower speeds. Stop recording after you complete the sweep. Use this series of speed and torque values to generate the power map as described in paragraph (e) of this section.

(e) Power mapping. For all engines, create a power-versus-speed map by transforming torque and speed values to corresponding power values. Use the mean values from the recorded map data. Do not use any interpolated values. Multiply each torque by its corresponding speed and apply the appropriate conversion factors to arrive at units of power (kW).

(f) Test speed and test torque. Transform your duty cycles using maximum test speed for variable-speed engines and maximum test torque for constant-speed engines. You may declare maximum test speed before mapping as long as it is within (97.5 to 102.5) % of its mapped value. You may declare maximum test torque before mapping as long as it is within (95 to 100) % of its mapped value. Otherwise, you must use the measured value for transforming duty cycles.

(g) Other mapping procedures. You may use other mapping procedures if you believe the procedures specified in this section are unsafe or unrepresentative for your engine. Any alternate techniques must satisfy the intent of the specified mapping procedures, which is to determine the maximum available torque at all engine speeds that occur during a duty cycle. Report any deviations from this section's mapping procedures.

§1065.512 Duty cycle generation.

(a) The standard-setting part defines applicable duty cycles in a normalized format. A normalized duty cycle consists of a sequence of paired values for speed and torque or for speed and power.

(b) Transform normalized values of speed, torque, and power using the following conventions:

(1) Engine speed for variable-speed engines. For variable-speed engines, normalized speed may be expressed as a percentage between idle speed and maximum test speed, f_{ntest}, or speed may be expressed by referring to a defined speed by name, such as "warm, no-load idle," "intermediate speed," or "A," "B," or "C" speed. Section 1065.610 describes how to transform these normalized values into a sequence of reference speeds, f_{nref}. Note that the cycle validation criteria in §1065.514 allow an engine to govern itself at its in-use idle speed. This allowance permits you to test engines with enhanced-idle devices.

(2) Engine torque for variable-speed engines. For variable-speed engines, normalized torque is expressed as a percentage of the mapped torque at the corresponding reference speed. Section 1065.610 describes how to transform normalized torques into a sequence of reference torques, T_{ref}. Section 1065.610 also describes under what conditions you may command T_{ref} greater than the reference torque you calculated from a normalized duty cycle. This provision permits you to command T_{ref} values representing curb-idle transmission torque (CITT).

(3) Engine torque speed for constant-speed engines. For constant-speed engines, normalized torque is expressed as a percentage of maximum test torque, T_{test}. Section 1065.610 describes how to transform normalized torques into a sequence of reference torques, T_{ref}. Section 1065.610 also describes under what conditions you may command T_{ref} greater than 0 N·m when a normalized duty cycle specifies a 0 % torque command.

(4) Engine power. For all engines, normalized power is expressed as a percentage of mapped power at maximum test speed, f_{ntest}. Section 1065.610 describes how to transform these normalized values into a sequence of reference powers P_{ref}. You may convert these reference powers to reference speeds and torques for operator demand and dynamometer control.

(c) Commands for variable-speed engines. Command reference speeds and torques sequentially to perform a duty cycle. Update commands and record reference and feedback values at a frequency of at least 5 Hz. Use smooth transitions between reference values.

(d) Commands for constant-speed engines. Use dynamometer controls to command reference torques sequentially for performing a duty cycle. Operate the engine with a production constant-speed governor or simulate a constant-speed governor by controlling engine speed with an operator demand control system described in §1065.110. Update commands and record reference and feedback values at a frequency of at least 5 Hz. Use smooth transitions between reference values.

(d) Practice cycles. You may perform practice duty cycles with the test engine to optimize operator demand and dynamometer controls to meet the cycle validation criteria specified in §1065.514.

§1065.514 Cycle validation criteria.

This section describes how to determine if a test engine's feedback speeds and torques adequately matched the reference values in a duty cycle. For any data required in this section, use the reference and feedback values that you recorded during a test interval.

(a) Testing performed by EPA. Our tests must meet the specifications of paragraph (h) of this section, unless we determine that failing to meet the specifications is related to engine performance rather than shortcomings of the dynamometer or other laboratory equipment.

(b) Testing performed by manufacturers. Emission tests that meet the specifications of paragraph (h) of this section satisfy the standard-setting part's requirements for duty cycles. You may ask to use a dynamometer or other laboratory equipment that cannot meet those specifications. We will approve your request as long as using the alternate equipment does not affect your ability to show compliance with the applicable emission standards.

(c) Time-alignment. Because time lag between feedback values and the reference values may bias cycle validation results, you may advance or delay the entire sequence of feedback engine speed and torque pairs to synchronize them with the reference sequence.

(d) Power. Before omitting any points under paragraph (e) of this section, calculate feedback power, P_i and reference power, P_{refi}, and calculate total work, W and reference work, W_{ref}, as described in §1065.650. Omit any points recorded during engine cranking. Cranking includes any time when an engine starter is engaged and any time when the engine is motored with a dynamometer for the sole purpose of starting the engine. See §1065.525(a) and (b) for more information about engine cranking.

(e) Omitting additional points. In addition to omitting points recorded during cranking, according to paragraph (d) of this section, you may also omit certain points from duty cycle regression statistics, which are also summarized in Table 1 of this section, as follows:

(1) When operator demand is at its minimum you may omit the following points:

(i) Power and torque, if the reference torque is negative (i.e., engine motoring).

(ii) Power and speed, if the reference speed corresponds to an idle command (0 %), the reference torque corresponds to a minimum command (0 %), and the absolute value of the feedback torque is less than the corresponding reference torque plus 2 % of the maximum mapped torque.

(iii) Two out of three of power, torque, and speed if either feedback speed or feedback torque is greater its reference command. You may not omit a point from regression statistics if both feedback speed and torque are greater than their reference commands.

(2) When operator demand is at its maximum, you may omit two out of three of power, torque, and speed if either feedback speed or feedback torque is less than its reference command. You may not omit a point from regression statistics if both feedback speed and torque are less than their reference commands.

Table 1 of §1065.514—Summary of

point omission criteria from duty-cycle regression statistics

When operator demand is at its...	you may omit...	if...
minimum	power and torque	$T_{ref} < 0$
minimum	Power and speed	f_{nref} = idle (0 %) and T_{ref} = minimum (0 %) and $T < T_{ref} \pm 2\ \% \cdot T_{max\ mapped}$
minimum	2 out of 3 of power, torque, and speed	$f_n > f_{nref}$ or $T > T_{ref}$ but not if $f_n > f_{nref}$ and $T > T_{ref}$
maximum	2 out of 3 of power, torque, and speed	$f_n < f_{nref}$ or $T < T_{ref}$ but not if $f_n < f_{nef}$ and $T < T_{ref}$

(g) Use the remaining points to calculate regression statistics described in §1065.602, as follows:

(1) Slopes for feedback speed, a_{1fn}, feedback torque, a_{1T}, and feedback power a_{1P}.

(2) Intercepts for feedback speed, a_{0fn}, feedback torque, a_{0T}, and feedback power a_{0P}.

(3) Standard estimates of error for feedback speed, SE_{fn}, feedback torque, SE_T, and feedback power SE_P.

(4) Coefficients of determination for feedback speed, r^2_{fn}, feedback torque, r^{2T}, and feedback power r^2_P.

(h) Cycle statistics. Unless the standard-setting part specifies otherwise, use the following criteria to validate a duty cycle:

(1) For variable-speed engines only, feedback total work must be at or below 105 % of reference total work.

(2) For variable-speed engines only, apply all the statistical criteria in Table 2 of this section.

(3) For constant-speed engines, apply the statistical criteria only for torque in the Table 2 of this section.

Table 2 of §1065.514—Default statistical criteria for validating duty cycles

Parameter	Speed	Torque	Power
Slope, a_1	$0.950 \leq a_1 \leq 1.030$	$0.830 \leq a_1 \leq 1.030$	$0.830 \leq a_1 \leq 1.030$
Absolute value of intercept, $\lvert a_0 \rvert$	≤ 10 % of warm idle	≤ 2 % of maximum mapped torque	≤ 2 % of maximum mapped power
Standard error of estimate, *SE*	≤ 5 % of maximum test speed	≤ 10 % of maximum mapped torque	≤ 10 % of maximum mapped power
Coefficient of determination, r^2	≥ 0.970	≥ 0.850	≥ 0.910

§1065.520 Pre-test verification procedures and pre-test data collection.

(a) If your engine must comply with a PM standard, follow the procedures for PM sample preconditioning and tare weighing in §1065.590.

(b) Unless the standard-setting part specifies different values, verify that ambient conditions before the test are within the following tolerances:

(1) Ambient temperature of (20 to 30) °C.

(2) Barometric pressure of (80.000 to 103.325) kPa and within ±5 % of the value recorded at the time of the last engine map.

(3) Dilution air as specified in §1065.140(b).

(c) You may test engines at any humidity.

(d) You may perform a final calibration of the speed, torque, and proportional-flow control systems, which may include performing practice duty cycles.

(e) You may perform the following recommended procedure to precondition sampling systems:

(1) Start the engine and use good engineering judgment to bring it to 100 % torque above its peak-torque speed.

(2) Operate any dilution systems at their expected flow rates. Prevent aqueous condensation in the dilution systems.

(3) Operate any PM sampling systems at their expected flow rates.

(4) Sample PM for at least 10 min using any sample media. You may change sample media during preconditioning. You may discard preconditioning samples without weighing them.

(5) You may purge any gaseous sampling systems during preconditioning.

(6) You may conduct calibrations or performance checks on any idle equipment or analyzers during preconditioning.

(7) Proceed with the test sequence described in §1065.530(a)(1).

(f) <u>HC contamination check</u>. After the last practice or preconditioning cycle before an emission test, check for contamination in the HC sampling system as follows:

(1) Select the HC analyzer range for measuring the flow-weighted average concentration expected at the HC standard.

(2) Zero the HC analyzer using zero air introduced at the analyzer port.

(3) Span the HC analyzer using span gas introduced at the analyzer port. Span on a carbon number basis of one (1), C_1. For example, if you use a C_3H_8 span gas of concentration 200 µmol/mol, span the FID to respond with a value of 600 µmol/mol.

(4) Overflow zero air at the HC probe or into a fitting between the HC probe and the transfer line.

(5) Measure the HC concentration in the sampling system, as follows:

(i) For continuous sampling, record the mean HC concentration as overflow zero air flows.

(ii) For batch sampling, fill the sample medium and record its mean HC concentration.

(6) Record this value as the initial HC concentration, x_{HCinit}, and use it to correct measured values as described in §1065.660.

(7) If x_{HCinit} exceeds the greatest of the following values, determine the source of the contamination and take corrective action, such as purging the system or replacing contaminated portions:

(i) 2 % of the flow-weighted average concentration expected at the standard or measured during testing, whichever is greater.

(ii) 2 mmol/mol.

(8) If corrective action does not resolve the deficiency, you may request to use the contaminated system as an alternate procedure under §1065.10.

§1065.525 Engine starting, restarting, and shutdown.

(a) Start the engine using one of the following methods:

(1) Start the engine as recommended in the owners manual using a production starter motor and a fully charged battery or a power supply.

(2) Use the dynamometer to start the engine. To do this, motor the engine within ±25 % of its typical in-use cranking speed. Accelerate the engine to cranking speed within ±25 % of the time it would take with an in-use engine. Stop cranking within 1 s of starting the engine.

(b) If the engine does not start after 15 s of cranking, stop cranking and determine why the engine failed to start, unless the owners manual or the service-repair manual describes the longer cranking time as normal.

(c) Respond to engine stalling with the following steps:

(1) If the engine stalls during warm-up before emission sampling begins, restart the engine and continue warm-up.

(2) If the engine stalls during preconditioning before emission sampling begins, restart the engine and restart the preconditioning sequence.

(3) If the engine stalls at any other time after emission sampling begins, the test is void.

(d) Shut down the engine according to the manufacturer's specifications.

§1065.530 Emission test sequence.

(a) Time the start of testing as follows:

(1) Perform one of the following if you precondition sampling systems as described in §1065.520(d):

(i) For cold-start duty cycles, shut down the engine. Unless the standard-setting part specifies otherwise, you may use forced cooling to stabilize the temperature of the engine and any aftertreatment systems. You may start a cold-start duty cycle when the temperatures of an engine's lubricant, coolant, and aftertreatment systems are between (20 and 30) °C.

(ii) For hot-start emission measurements, shut down the engine. Start a hot-start duty cycle within 20 min of engine shutdown.

(iii) For testing that involves hot-stabilized emission measurements, such as steady-state testing, you may continue to operate the engine at f_{ntest} and 100 % torque if that is the first operating point. Otherwise, operate the engine at warm, no-load idle or the first operating point of the duty cycle. In any case, start the duty cycle within 10 min after you complete the preconditioning procedure.

(2) For all other testing, perform one of the following:

(i) For cold-start duty cycles, start the engine and the duty cycle when the temperatures of an engine's lubricant, coolant, and aftertreatment systems are between (20 and 30) °C. Unless the standard-setting part

specifies otherwise, you may use forced cooling to stabilize the temperature of the engine and any aftertreatment system.

(ii) For hot-start emission measurements, first operate the engine at any speed above peak-torque speed and at (65 to 85) % of maximum mapped power until either the engine coolant temperature or block absolute temperature is within 2 % of its mean value for at least 2 min or until the engine thermostat controls engine temperature. Shut down the engine. Start the duty cycle within 20 min of engine shutdown.

(iii) For testing that involves hot-stabilized emission measurements, bring the engine either to warm, no-load idle or the first operating point of the duty cycle. Start the test within 10 min of achieving temperature stability. You may determine temperature stability either as the point at which the engine coolant temperature or the block absolute temperature is within 2 % of its mean value for at least 2 min, or the point at which the engine thermostat controls engine temperature.

(b) Take the following steps before emission sampling begins:

(1) For batch sampling, connect clean storage media, such as evacuated bags or tare-weighed filters.

(2) Start all measurement instruments according to the instrument manufacturer's instructions.

(2) Start dilution systems, sample pumps, cooling fans, and the data-collection system.

(3) Preheat any heat exchangers in the sampling system.

(4) Allow heated components such as sample lines, filters, and pumps to stabilize at operating temperature.

(5) Perform vacuum-side leak checks as specified in §1065.345.

(6) Using bypass, adjust the sample flow rates to desired levels.

(7) Zero any integrating devices.

(9) Zero and span all constituent analyzers using NIST-traceable gases that meet the specifications of §1065.750. Span flame ionization detector analyzers on a carbon number basis of one (1), C_1. For example, if you use a C_3H_8 span gas of concentration 200 μmol/mol, span the FID to respond with a value of 600 μmol/mol.

(10) If you correct for dilution air background concentrations of engine exhaust constituents, start measuring and recording background constituent concentrations.

(c) Start testing as follows:

(1) If an engine is already running and warmed up, and starting is not part of the duty cycle, simultaneously start running the duty cycle, sampling exhaust gases, recording data, and integrating measured values.

(2) If engine starting is part of the duty cycle, initiate data logging, sampling of exhaust gases, and integrating measured values before attempting to start the engine. Initiate the duty cycle when the engine starts.

(d) Before the end of the test interval, continue to operate all sampling and dilution systems to allow the sampling system's response time to elapse. Then stop all sampling and recording, including the recording of background samples. Finally, stop any integrating devices and indicate the end of the duty cycle on the data-collection medium.

(e) Shut down the engine if you have completed testing or if it is part of the duty cycle.

(f) If testing involves another duty cycle after a soak period with the engine off, start a timer when the engine shuts down, and repeat the steps in paragraphs (b) through (e) of this section as needed.

(g) Take the following steps after emission sampling is complete:

(1) Place any used PM samples into covered or sealed containers and return them to the PM-stabilization environment. Follow the PM sample post-conditioning and total weighing procedures in §1065.595.

(2) As soon as practical after the duty cycle is complete, analyze any gaseous batch samples, including background samples.

(3) After quantifying exhaust gases, check drift as follows:

(i) Record the mean analyzer value after stabilizing a zero gas to the analyzer. Stabilization may include time to purge the analyzer of any sample gas, plus any additional time to account for analyzer response.

(ii) Record the mean analyzer value after stabilizing the span gas to the analyzer. Stabilization may include time to purge the analyzer of any sample gas, plus any additional time to account for analyzer response.

(iii) Use these data to validate and correct for drift as described in §1065.657.

(h) Determine if the test meets the validation criteria in §1065.514.

§1065.545 Validation of proportional flow control for batch sampling.

(a) For any proportional batch sample such as a bag sample or PM filter sample, demonstrate that proportional sampling was maintained using one of the following:

(1) Record the sample flow rate and the total flow rate at 1 Hz or more frequently. Use this data with the statistical calculations in §1065.602 to determine the standard error of the estimate, *SE*, of the sample flow rate versus the total flow rate. For each test interval, demonstrate that *SE* was less than or equal to 3.5 % of the mean sample flow rate. You may omit up to 5 % of the data points as outliers to improve *SE*.

(2) Record the sample flow rate and the total flow rate at 1 Hz or more frequently. For each test interval, demonstrate that each flow rate was constant within ±2.5 % of its respective mean or target flow rate.

(3) For critical-flow venturis, record venturi-inlet conditions at 1 Hz or more frequently. Demonstrate that the density at the venturi inlet was constant within ±2.5 % of the mean or target density over each test interval. For a CVS critical-flow venturi, you may demonstrate this by showing that the absolute temperature at the venturi inlet was constant within ±4 % of the mean or target temperature over each test interval.

(4) For positive-displacement pumps, record pump-inlet conditions at 1 Hz or more frequently. Demonstrate that the density at the pump inlet was constant within ±2.5 % of the mean or target density over each test interval. For a CVS pump, you may demonstrate this by showing that the absolute temperature at the pump inlet was constant within ±2 % of the mean or target temperature over each test interval.

(5) Using good engineering judgment, demonstrate using an engineering analysis that the proportional-flow control system inherently ensures proportional sampling under all circumstances expected during testing. For example, you use CFVs for sample flow and total flow and their inlet pressures and temperatures are always the same as each others, and they always operate under critical-flow conditions.

§1065.550 Constituent analyzer range validation, drift validation, and drift correction.

(a) Check the results of all analyzers that do not have auto-ranging capability to determine if any results show that an analyzer operated above 100 % of its range. If an analyzer operated above 100 % of its range at any time during the test, perform the following steps:

(1) For batch sampling, re-analyze the sample using the nearest analyzer range that results in a maximum instrument response below 100 %. Report the result from the lowest range from which the analyzer operates below 100 % of its range for the entire test. Report all results.

(2) For continuous sampling, repeat the entire test using the next higher analyzer range. If the analyzer again operates above 100 % of its range, repeat the test using the next higher range. Continue to repeat the test until the analyzer operates at less than 100 % of its range for the entire test. Report all results.

(b) Calculate and correct for drift as described in §1065.657. Drift invalidates a test if the drift correction exceeds ±4 % of the flow-weighted average concentration expected at the standard or measured during a test interval, whichever is greater.

§1065.590 PM sample preconditioning and tare weighing.

Before an emission test, take the following steps to prepare PM samples and equipment for PM measurements:

(a) Make sure the balance and PM-stabilization environments meet the periodic performance checks in §1065.390.

(b) Visually inspect unused sample media (such as filters) for defects.

(c) To handle PM samples, use electrically grounded tweezers or a grounding strap, as described in §1065.190.

(d) Place unused sample media in one or more containers that are open to the PM-stabilization environment. If you are using filters, you may place them in the bottom half of a filter cassette.

(e) Stabilize sample media in the PM-stabilization environment. Consider a sample medium stabilized as long as it has been in the PM-stabilization environment for a minimum of 30 min, during which the PM-stabilization environment has been within the specifications of §1065.190.

(f) Weigh the sample media automatically or manually, as follows:

(1) For automatic weighing, follow the automation system manufacturer's instructions to prepare samples for weighing. This may include placing the samples in a special container.

(2) For manual weighing, use good engineering judgment to determine if substitution weighing is necessary to show that an engine meets the applicable standard. You may follow the substitution weighing procedure in paragraph (i) of this section, or you may develop your own procedure.

(g) Correct the measured weight for buoyancy as described in §1065.690. These buoyancy-corrected values are the tare masses of the PM samples.

(h) You may repeat measurements to determine mean masses. Use good engineering judgment to exclude outliers and calculate mean mass values.

(i) Substitution weighing involves measurement of a reference weight before and after each weighing of a PM sample. While substitution weighing requires more measurements, it corrects for a balance's zero-drift and it relies on balance linearity only over a small range. This is advantageous when quantifying net PM masses that are less than 0.1 % of the sample medium's mass. However, it may not be advantageous when net PM masses exceed 1 % of the sample medium's mass. The following steps are an example of substitution weighing:

(1) Use electrically grounded tweezers or a grounding strap, as described in §1065.190.

(2) Use a static neutralizer as described in §1065.190 to minimize static electric charge on any object before it is placed on the balance pan.

(3) Place on the balance pan a calibration weight that has a similar mass to that of the sample medium and meets the specifications for calibration weights in §1065.790. If you use filters, this mass should be about (80 to 100) mg for typical 47 mm diameter filters.

(4) Record the stable balance reading, then remove the calibration weight.

(5) Weigh an unused sample, record the stable balance reading and record the balance environment's dewpoint, ambient temperature, and barometric pressure.

(6) Reweigh the calibration weight and record the stable balance reading.

(7) Calculate the arithmetic mean of the two calibration-weight readings recorded immediately before and after weighing the unused sample. Subtract that mean value from the unused sample reading, then add the true mass of the calibration weight as stated on the calibration-weight certificate. Record this result.

(8) Repeat the steps in paragraphs (i)(1) through (7) of this section for additional unused sample media.

(j) If you use filters as sample media, load unused filters that have been tare-weighed into filter cassettes and place the loaded cassettes in a covered or sealed container before taking them to the test cell for sampling. We recommend that you keep filter cassettes clean by periodically washing or wiping them with a compatible solvent. Depending upon your cassette material, ethanol might be an acceptable solvent.

§1065.595 PM sample post-conditioning and total weighing.

(a) Make sure the balance and PM-stabilization environments meet the periodic performance checks in §1065.390.

(b) In the PM-stabilization environment, remove PM samples from sealed containers. If you use filters, you may remove them from their cassettes before or after stabilization. When you remove a filter from a cassette, separate the top half of the cassette from the bottom half using a cassette separator designed for this purpose.

(c) To handle PM samples, use electrically grounded tweezers or a grounding strap, as described in §1065.190.

(d) Visually inspect PM samples. If PM ever contacts the transport container, cassette assembly, filter-separator tool, tweezers, static neutralizer, balance, or any other surface, void the measurements associated with that sample and clean the surface it contacted.

(e) To stabilize PM samples, place them in one or more containers that are open to the PM-stabilization environment, which is described in §1065.190. Consider a sample stabilized as long as it has been in the PM-stabilization environment for a minimum of 30 min, during which the PM-stabilization environment has been within the specifications of §1065.190. Alternatively, for engines subject to PM standards above 0.05 g/kW-hr, you may consider a sample medium stabilized after 60 min.

(f) Repeat the procedures in §1065.590(f) through (h) to weigh used PM samples, but refer to a sample's post-test mass after correcting for buoyancy as its total mass.

(g) Subtract each buoyancy-corrected tare mass from its respective buoyancy-corrected total mass. The result is the net PM mass, m_{PM}. Use m_{PM} in emission calculations in §1065.650.

Subpart G— Calculations and Data Requirements

§1065.601 Overview.

(a) This subpart describes how to use the signals recorded before, during, and after an emission test to calculate brake-specific emissions of each regulated constituent.

(b) You may use data from multiple systems to calculate test results, consistent with good engineering judgment. We allow weighted averages where appropriate. You may discard statistical outliers, but you must report all results.

(c) Calculations for some calibrations and performance checks are in this subpart.

(d) Statistical values are defined in this subpart.

§1065.602 Statistics.

(a) This section contains equations and example calculations for statistics that are specified in this part. In this section we use the letter "y" to denote a generic measured quantity, the superscript over-bar "¯" to denote an arithmetic mean, and the subscript "$_{ref}$" to denote the reference quantity being measured.

(b) <u>Arithmetic mean</u>. Calculate an arithmetic mean, $\overline{y}$, as follows,

$$\overline{y} = \frac{\sum_{i=1}^{N} y_i}{N}$$

Example:

$$N = 3$$
$$y_1 = 10.60$$
$$y_2 = 11.91$$
$$y_N = y_3 = 11.20$$

$$\overline{y} = \frac{\sum_{i=1}^{3} y_i}{3} = \frac{10.60 + 11.91 + 11.09}{3}$$

$$\overline{y} = 11.20$$

(c) <u>Standard deviation</u>. Calculate a non-biased (e.g., N-1) sample standard deviation, σ , as follows:

$$\sigma_y = \sqrt{\frac{\sum_{i=1}^{N}\left(y_i - \overline{y}\right)^2}{\left(N-1\right)}}$$

Example:

$N = 3$

$y_1 = 10.60$

$y_2 = 11.91$

$y_N = y_3 = 11.09$

$\overline{y} = 11.20$

$$\sigma_y = \sqrt{\frac{\sum_{i=1}^{3}\left(y_i - 11.2\right)^2}{\left(3-1\right)}} = \sqrt{\frac{\left(10.60-11.2\right)^2 + \left(11.91-11.2\right)^2 + \left(11.09-11.2\right)^2}{2}}$$

$\sigma_y = 0.6619$

(d) <u>Root mean square</u>. Calculate a root mean square, rms_y , as follows:

$$rms_y = \sqrt{\frac{1}{N}\sum_{i=1}^{N} y_i^{\,2}}$$

$$\begin{aligned}
&Example: \\
&N = 3 \\
&y_1 = 10.60 \\
&y_2 = 11.91 \\
&y_N = y_3 = 11.09
\end{aligned}$$

$$rms_y = \sqrt{\frac{10.60^2 + 11.91^2 + 11.09^2}{3}}$$

$$rms_y = 11.21$$

(e) <u>Accuracy</u>. Calculate an accuracy, as follows, noting that the $\overline{y}_i$ are arithmetic means, each determined by repeatedly measuring one sample of a single reference quantity, y_{ref} .

$$accuracy = \left| y_{ref} - \overline{y} \right|$$

$$Example:$$

$$y_{ref} = 1800.0$$

$$\left(N = 10 \right)$$

$$\overline{y} = \frac{\sum_{i=1}^{10} \overline{y}_i}{10} = 1802.5$$

$$accuracy = \left| 1800.0 - 1802.5 \right|$$

$$accuracy = 2.5$$

(f) <u>*t*-test</u>. Determine if your data passes a *t*-test by using the following equations and tables:

(1) For an unpaired *t*-test calculate the *t* statistic and its number of degrees of freedom, ν , as follows:

$$t = \frac{\left|\overline{y}_{ref} - \overline{y}\right|}{\sqrt{\frac{\sigma_{ref}^2}{N_{ref}} + \frac{\sigma_y^2}{N}}}$$

$Example:$

$\overline{y}_{ref} = 1205.3$

$\overline{y} = 1123.8$

$\sigma_{ref} = 9.399$

$\sigma_y = 10.583$

$N_{ref} = 11$

$N = 7$

$$t = \frac{\left|1205.3 - 1123.8\right|}{\sqrt{\frac{9.399^2}{11} + \frac{10.583^2}{7}}}$$

$t = 16.63$

$$\nu = \frac{\left(\frac{\sigma_{ref}^2}{N_{ref}} + \frac{\sigma_y^2}{N}\right)^2}{\frac{\left(\sigma_{ref}^2 / N_{ref}\right)^2}{N_{ref} - 1} + \frac{\left(\sigma_y^2 / N\right)^2}{N - 1}}$$

$$\begin{aligned}
&Example: \\
&\sigma_{ref} = 9.399 \\
&N_{ref} = 11 \\
&\sigma_y = 10.583 \\
&N = 7
\end{aligned}$$

$$\nu = \frac{\left(\frac{9.399^2}{11} + \frac{10.583^2}{7}\right)^2}{\frac{\left(9.399^2/11\right)^2}{11-1} + \frac{\left(10.583^2/7\right)^2}{7-1}}$$

$$\nu = 11.76$$

(2) For a paired *t*-test calculate the *t* statistic and its number of degrees of freedom, ν , as follows, noting that the ε_i are the errors (e.g., differences) between each pair of y_{refi} and y_i :

$$t = \frac{\left|\overline{\varepsilon}\right| \cdot \sqrt{N}}{\sigma_{\varepsilon}}$$

$Example:$

$\overline{\varepsilon} = -0.12580$

$N = 16$

$\sigma_{\varepsilon} = 0.04837$

$$t = \frac{\left|-0.12580\right| \cdot \sqrt{16}}{0.04837}$$

$t = 10.403$

$$\nu = N - 1$$

$Example:$

$N = 16$

$$\nu = N - 1$$

$$\nu = 15$$

(3) Use Table 1 of this section to compare t to the t_{crit} values tabulated versus the number of degrees of freedom. If t is less than t_{crit}, then t passes the t-test.

Table 1 of §1065.602–Critical t values versus number of degrees of freedom, ν

t_{crit} versus ν		
	Confidence	
ν	90%	95%
1	6.314	12.706
2	2.920	4.303
3	2.353	3.182
4	2.132	2.776
5	2.015	2.571
6	1.943	2.447
7	1.895	2.365
8	1.860	2.306
9	1.833	2.262
10	1.812	2.228
11	1.796	2.201
12	1.782	2.179
13	1.771	2.160
14	1.761	2.145
15	1.753	2.131
16	1.746	2.120
18	1.734	2.101
20	1.725	2.086
22	1.717	2.074
24	1.711	2.064
26	1.706	2.056
28	1.701	2.048
30	1.697	2.042
35	1.69	2.03
40	1.684	2.021
50	1.676	2.009
70	1.667	1.994
100	1.66	1.984
INF	1.645	1.96

(g) <u>*F*-test</u>. Calculate the *F* statistic as follows:

$$F_y = \frac{\sigma_y^2}{\sigma_{ref}^2}$$

$$Example:$$

$$\sigma_y = \sqrt{\frac{\sum_{i=1}^{N}\left(y_i - \overline{y}\right)^2}{\left(N-1\right)}} = 10.583$$

$$\sigma_{ref} = \sqrt{\frac{\sum_{i=1}^{N_{ref}}\left(y_{refi} - \overline{y}_{ref}\right)^2}{\left(N_{ref}-1\right)}} = 9.399$$

$$F = \frac{10.583^2}{9.399^2}$$

$$F = 1.268$$

(1) For a 90 % confidence *F*-test, use Table 2 of this section to compare *F* to the F_{crit90} values tabulated versus *N* minus one (*N*-1) and N_{ref} minus one (N_{ref} -1). If *F* is less than F_{crit90}, then *F* passes the *F*-test at 90 % confidence.

(2) For a 95 % confidence *F*-test, use Table 3 of this section to compare *F* to the F_{crit95} values tabulated versus *N* minus one (*N*-1) and N_{ref} minus one (N_{ref} -1). If *F* is less than F_{crit95}, then *F* passes the *F*-test at 95 % confidence.

Table 2 of §1065.602–Critical F values, F_{crit90}, versus N-1 and N_{ref}-1 at 90 % confidence.

N-1	1	2	3	4	5	6	7	8	9	10	12	15	20	24	30	40	60	120	INF
N_{ref}-1																			
1	39.86	49.50	53.59	55.83	57.24	58.20	58.90	59.43	59.85	60.19	60.70	61.22	61.74	62.00	62.26	62.52	62.79	63.06	63.32
2	8.526	9.000	9.162	9.243	9.293	9.326	9.349	9.367	9.381	9.392	9.408	9.425	9.441	9.450	9.458	9.466	9.475	9.483	9.491
3	5.538	5.462	5.391	5.343	5.309	5.285	5.266	5.252	5.240	5.230	5.216	5.200	5.184	5.176	5.168	5.160	5.151	5.143	5.134
4	4.545	4.325	4.191	4.107	4.051	4.010	3.979	3.955	3.936	3.920	3.896	3.870	3.844	3.831	3.817	3.804	3.790	3.775	3.761
5	4.060	3.780	3.619	3.520	3.453	3.405	3.368	3.339	3.316	3.297	3.268	3.238	3.207	3.191	3.174	3.157	3.140	3.123	3.105
6	3.776	3.463	3.289	3.181	3.108	3.055	3.014	2.983	2.958	2.937	2.905	2.871	2.836	2.818	2.800	2.781	2.762	2.742	2.722
7	3.589	3.257	3.074	2.961	2.883	2.827	2.785	2.752	2.725	2.703	2.668	2.632	2.595	2.575	2.555	2.535	2.514	2.493	2.471
8	3.458	3.113	2.924	2.806	2.726	2.668	2.624	2.589	2.561	2.538	2.502	2.464	2.425	2.404	2.383	2.361	2.339	2.316	2.293
9	3.360	3.006	2.813	2.693	2.611	2.551	2.505	2.469	2.440	2.416	2.379	2.340	2.298	2.277	2.255	2.232	2.208	2.184	2.159
10	3.285	2.924	2.728	2.605	2.522	2.461	2.414	2.377	2.347	2.323	2.284	2.244	2.201	2.178	2.155	2.132	2.107	2.082	2.055
11	3.225	2.860	2.660	2.536	2.451	2.389	2.342	2.304	2.274	2.248	2.209	2.167	2.123	2.100	2.076	2.052	2.026	2.000	1.972
12	3.177	2.807	2.606	2.480	2.394	2.331	2.283	2.245	2.214	2.188	2.147	2.105	2.060	2.036	2.011	1.986	1.960	1.932	1.904
13	3.136	2.763	2.560	2.434	2.347	2.283	2.234	2.195	2.164	2.138	2.097	2.053	2.007	1.983	1.958	1.931	1.904	1.876	1.846
14	3.102	2.726	2.522	2.395	2.307	2.243	2.193	2.154	2.122	2.095	2.054	2.010	1.962	1.938	1.912	1.885	1.857	1.828	1.797
15	3.073	2.695	2.490	2.361	2.273	2.208	2.158	2.119	2.086	2.059	2.017	1.972	1.924	1.899	1.873	1.845	1.817	1.787	1.755
16	3.048	2.668	2.462	2.333	2.244	2.178	2.128	2.088	2.055	2.028	1.985	1.940	1.891	1.866	1.839	1.811	1.782	1.751	1.718
17	3.026	2.645	2.437	2.308	2.218	2.152	2.102	2.061	2.028	2.001	1.958	1.912	1.862	1.836	1.809	1.781	1.751	1.719	1.686
18	3.007	2.624	2.416	2.286	2.196	2.130	2.079	2.038	2.005	1.977	1.933	1.887	1.837	1.810	1.783	1.754	1.723	1.691	1.657
19	2.990	2.606	2.397	2.266	2.176	2.109	2.058	2.017	1.984	1.956	1.912	1.865	1.814	1.787	1.759	1.730	1.699	1.666	1.631
20	2.975	2.589	2.380	2.249	2.158	2.091	2.040	1.999	1.965	1.937	1.892	1.845	1.794	1.767	1.738	1.708	1.677	1.643	1.607
21	2.961	2.575	2.365	2.233	2.142	2.075	2.023	1.982	1.948	1.920	1.875	1.827	1.776	1.748	1.719	1.689	1.657	1.623	1.586
20	2.949	2.561	2.351	2.219	2.128	2.061	2.008	1.967	1.933	1.904	1.859	1.811	1.759	1.731	1.702	1.671	1.639	1.604	1.567
23	2.937	2.549	2.339	2.207	2.115	2.047	1.995	1.953	1.919	1.890	1.845	1.796	1.744	1.716	1.686	1.655	1.622	1.587	1.549
24	2.927	2.538	2.327	2.195	2.103	2.035	1.983	1.941	1.906	1.877	1.832	1.783	1.730	1.702	1.672	1.641	1.607	1.571	1.533
25	2.918	2.528	2.317	2.184	2.092	2.024	1.971	1.929	1.895	1.866	1.820	1.771	1.718	1.689	1.659	1.627	1.593	1.557	1.518
26	2.909	2.519	2.307	2.174	2.082	2.014	1.961	1.919	1.884	1.855	1.809	1.760	1.706	1.677	1.647	1.615	1.581	1.544	1.504
27	2.901	2.511	2.299	2.165	2.073	2.005	1.952	1.909	1.874	1.845	1.799	1.749	1.695	1.666	1.636	1.603	1.569	1.531	1.491
28	2.894	2.503	2.291	2.157	2.064	1.996	1.943	1.900	1.865	1.836	1.790	1.740	1.685	1.656	1.625	1.593	1.558	1.520	1.478
29	2.887	2.495	2.283	2.149	2.057	1.988	1.935	1.892	1.857	1.827	1.781	1.731	1.676	1.647	1.616	1.583	1.547	1.509	1.467
30	2.881	2.489	2.276	2.142	2.049	1.980	1.927	1.884	1.849	1.819	1.773	1.722	1.667	1.638	1.606	1.573	1.538	1.499	1.456
40	2.835	2.440	2.226	2.091	1.997	1.927	1.873	1.829	1.793	1.763	1.715	1.662	1.605	1.574	1.541	1.506	1.467	1.425	1.377
60	2.791	2.393	2.177	2.041	1.946	1.875	1.819	1.775	1.738	1.707	1.657	1.603	1.543	1.511	1.476	1.437	1.395	1.348	1.291
120	2.748	2.347	2.130	1.992	1.896	1.824	1.767	1.722	1.684	1.652	1.601	1.545	1.482	1.447	1.409	1.368	1.320	1.265	1.193
INF	2.706	2.303	2.084	1.945	1.847	1.774	1.717	1.670	1.632	1.599	1.546	1.487	1.421	1.383	1.342	1.295	1.240	1.169	1.000

Table 3 of §1065.602–Critical F values, F_{crit95}, versus N-1 and N_{ref}-1 at 95 % confidence

N-1	1	2	3	4	5	6	7	8	9	10	12	15	20	24	30	40	60	120	INF
N_{ref}-1																			
1	161.4	199.5	215.7	224.5	230.1	233.9	236.7	238.8	240.5	241.8	243.9	245.9	248.0	249.0	250.1	251.1	252.2	253.2	254.3
2	18.51	19.00	19.16	19.24	19.29	19.33	19.35	19.37	19.38	19.39	19.41	19.42	19.44	19.45	19.46	19.47	19.47	19.48	19.49
3	10.12	9.552	9.277	9.117	9.014	8.941	8.887	8.845	8.812	8.786	8.745	8.703	8.660	8.639	8.617	8.594	8.572	8.549	8.526
4	7.709	6.944	6.591	6.388	6.256	6.163	6.094	6.041	5.999	5.964	5.912	5.858	5.803	5.774	5.746	5.717	5.688	5.658	5.628
5	6.608	5.786	5.410	5.192	5.050	4.950	4.876	4.818	4.773	4.735	4.678	4.619	4.558	4.527	4.496	4.464	4.431	4.399	4.365
6	5.987	5.143	4.757	4.534	4.387	4.284	4.207	4.147	4.099	4.060	4.000	3.938	3.874	3.842	3.808	3.774	3.740	3.705	3.669
7	5.591	4.737	4.347	4.120	3.972	3.866	3.787	3.726	3.677	3.637	3.575	3.511	3.445	3.411	3.376	3.340	3.304	3.267	3.230
8	5.318	4.459	4.066	3.838	3.688	3.581	3.501	3.438	3.388	3.347	3.284	3.218	3.150	3.115	3.079	3.043	3.005	2.967	2.928
9	5.117	4.257	3.863	3.633	3.482	3.374	3.293	3.230	3.179	3.137	3.073	3.006	2.937	2.901	2.864	2.826	2.787	2.748	2.707
10	4.965	4.103	3.708	3.478	3.326	3.217	3.136	3.072	3.020	2.978	2.913	2.845	2.774	2.737	2.700	2.661	2.621	2.580	2.538
11	4.844	3.982	3.587	3.357	3.204	3.095	3.012	2.948	2.896	2.854	2.788	2.719	2.646	2.609	2.571	2.531	2.490	2.448	2.405
12	4.747	3.885	3.490	3.259	3.106	2.996	2.913	2.849	2.796	2.753	2.687	2.617	2.544	2.506	2.466	2.426	2.384	2.341	2.296
13	4.667	3.806	3.411	3.179	3.025	2.915	2.832	2.767	2.714	2.671	2.604	2.533	2.459	2.420	2.380	2.339	2.297	2.252	2.206
14	4.600	3.739	3.344	3.112	2.958	2.848	2.764	2.699	2.646	2.602	2.534	2.463	2.388	2.349	2.308	2.266	2.223	2.178	2.131
15	4.543	3.682	3.287	3.056	2.901	2.791	2.707	2.641	2.588	2.544	2.475	2.403	2.328	2.288	2.247	2.204	2.160	2.114	2.066
16	4.494	3.634	3.239	3.007	2.852	2.741	2.657	2.591	2.538	2.494	2.425	2.352	2.276	2.235	2.194	2.151	2.106	2.059	2.010
17	4.451	3.592	3.197	2.965	2.810	2.699	2.614	2.548	2.494	2.450	2.381	2.308	2.230	2.190	2.148	2.104	2.058	2.011	1.960
18	4.414	3.555	3.160	2.928	2.773	2.661	2.577	2.510	2.456	2.412	2.342	2.269	2.191	2.150	2.107	2.063	2.017	1.968	1.917
19	4.381	3.522	3.127	2.895	2.740	2.628	2.544	2.477	2.423	2.378	2.308	2.234	2.156	2.114	2.071	2.026	1.980	1.930	1.878
20	4.351	3.493	3.098	2.866	2.711	2.599	2.514	2.447	2.393	2.348	2.278	2.203	2.124	2.083	2.039	1.994	1.946	1.896	1.843
21	4.325	3.467	3.073	2.840	2.685	2.573	2.488	2.421	2.366	2.321	2.250	2.176	2.096	2.054	2.010	1.965	1.917	1.866	1.812
22	4.301	3.443	3.049	2.817	2.661	2.549	2.464	2.397	2.342	2.297	2.226	2.151	2.071	2.028	1.984	1.938	1.889	1.838	1.783
23	4.279	3.422	3.028	2.796	2.640	2.528	2.442	2.375	2.320	2.275	2.204	2.128	2.048	2.005	1.961	1.914	1.865	1.813	1.757
24	4.260	3.403	3.009	2.776	2.621	2.508	2.423	2.355	2.300	2.255	2.183	2.108	2.027	1.984	1.939	1.892	1.842	1.790	1.733
25	4.242	3.385	2.991	2.759	2.603	2.490	2.405	2.337	2.282	2.237	2.165	2.089	2.008	1.964	1.919	1.872	1.822	1.768	1.711
26	4.225	3.369	2.975	2.743	2.587	2.474	2.388	2.321	2.266	2.220	2.148	2.072	1.990	1.946	1.901	1.853	1.803	1.749	1.691
27	4.210	3.354	2.960	2.728	2.572	2.459	2.373	2.305	2.250	2.204	2.132	2.056	1.974	1.930	1.884	1.836	1.785	1.731	1.672
28	4.196	3.340	2.947	2.714	2.558	2.445	2.359	2.291	2.236	2.190	2.118	2.041	1.959	1.915	1.869	1.820	1.769	1.714	1.654
29	4.183	3.328	2.934	2.701	2.545	2.432	2.346	2.278	2.223	2.177	2.105	2.028	1.945	1.901	1.854	1.806	1.754	1.698	1.638
30	4.171	3.316	2.922	2.690	2.534	2.421	2.334	2.266	2.211	2.165	2.092	2.015	1.932	1.887	1.841	1.792	1.740	1.684	1.622
40	4.085	3.232	2.839	2.606	2.450	2.336	2.249	2.180	2.124	2.077	2.004	1.925	1.839	1.793	1.744	1.693	1.637	1.577	1.509
60	4.001	3.150	2.758	2.525	2.368	2.254	2.167	2.097	2.040	1.993	1.917	1.836	1.748	1.700	1.649	1.594	1.534	1.467	1.389
120	3.920	3.072	2.680	2.447	2.290	2.175	2.087	2.016	1.959	1.911	1.834	1.751	1.659	1.608	1.554	1.495	1.429	1.352	1.254
INF	3.842	2.996	2.605	2.372	2.214	2.099	2.010	1.938	1.880	1.831	1.752	1.666	1.571	1.517	1.459	1.394	1.318	1.221	1.000

(h) Slope. Calculate a least-squares regression slope, a_1 , as follows:

$$a_{1y} = \frac{\sum_{i=1}^{N} (y_i - \overline{y}) \cdot \left(y_{refi} - \overline{y}_{ref} \right)}{\sum_{i=1}^{N} (y_{refi} - \overline{y}_{ref})^2}$$

$$\begin{aligned}
&Example: \\
&N = 6000 \\
&y_1 = 2045.8 \\
&y_{ref1} = 2045.0 \\
&\overline{y} = 1050.1 \\
&\overline{y}_{ref} = 1055.3
\end{aligned}$$

$$a_{1y} = \frac{(2045.8 - 1050.1) \cdot (2045.0 - 1055.3) + \ldots + (y_{6000} - 1050.1) \cdot \left(y_{ref\,6000} - 1055.3 \right)}{(2045.0 - 1055.3)^2 + \ldots + \left(y_{ref\,6000} - 1055.3 \right)^2}$$

$$a_{1y} = 1.0110$$

(i) Intercept. Calculate a least-squares regression intercept, a_{0y} , as follows:

$$a_{0y} = \overline{y} - \left(a_{1y} \cdot \overline{y}_{ref}\right)$$

Example:

$$\overline{y} = 1050.1$$
$$a_{1y} = 1.0110$$
$$\overline{y}_{ref} = 1055.3$$

$$a_{0y} = 1050.1 - \left(1.0110 \cdot 1055.3\right)$$

$$a_{0y} = -16.8083$$

(j) <u>Standard estimate of error</u>. Calculate a standard estimate of error, *SE*, as follows:

$$SE_y = \sqrt{\frac{\sum_{i=1}^{N}\left[y_i - a_{0y} - (a_{1y} \times y_{refi})\right]^2}{N-2}}$$

Example:

$$N = 6000$$
$$y_1 = 2045.8$$
$$a_{0y} = -16.8083$$
$$a_{1y} = 1.0110$$
$$y_{ref\,1} = 2045.0$$

$$SE_y = \sqrt{\frac{\left[2045.8 - (-16.8083) - (1.0110 \times 2045.0)\right]^2 + \ldots\left[y_{6000} - (-16.8083) - (1.0110 \times y_{ref\,6000})\right]^2}{6000-2}}$$
$$SE_y = 5.348$$

(k) Coefficient of determination. Calculate a coefficient of determination, r^2 , as follows:

$$r_y^2 = 1 - \frac{\sum_{i=1}^{N}\left[y_i - a_{0y} - (a_{1y} \bullet y_{refi})\right]^2}{\sum_{i=1}^{N}\left[y_i - \bar{y}\right]^2}$$

Example:

$N = 6000$

$y_1 = 2045.8$

$a_{0y} = -16.8083$

$a_{1y} = 1.0110$

$y_{ref\,1} = 2045.0$

$\bar{y} = 1480.5$

$$r_y^2 = 1 - \frac{\left[2045.8 - (-16.8083) - (1.0110 \times 2045.0)\right]^2 + \ldots\left[y_{6000} - (-16.8083) - (1.0110 \times y_{ref\,6000})\right]^2}{\left[2045.8 - 1480.5\right]^2 + \ldots\left[y_{6000} - 1480.5\right]^2}$$

$r_y^2 = 0.9859$

(k) Flow weighted average concentration. A flow-weighted average means the average of a quantity after it is weighted proportional to a corresponding flow rate. For example, if a gas concentration is measured continuously from the raw exhaust of an engine, its flow-weighted average concentration is the sum of the products of each recorded concentration times its respective exhaust flow rate, divided by the number of recorded values. As another example, the bag concentration from a CVS system is the same as the flow-weighted average concentration because the CVS system itself flow-weights the bag concentration. You might already expect a certain flow weighted average concentration of an emission at its standard based on previous testing with similar engines or testing with similar equipment and instruments. If you need to estimate your expected flow weighted average concentration of an emission at its standard, we recommend using the following examples as a guide for how to estimate the flow weighted average concentration expected at a standard. Note that these examples are not exact and that they contain assumptions that are not always valid. Use good engineering judgement to determine if you can use similar assumptions.

(1) To estimate the flow weighted average raw exhaust NO_x concentration from a turbo-charged heavy-duty compression-ignition engine at a NO_x standard of 2.5 g/kW·hr, you may do the following:

(i) Based on your engine design, approximate a maximum torque versus speed map and use it with the applicable normalized duty cycle in the standard-setting part to generate a reference duty cycle as described

in §1065.610. Calculate the total reference work, W_{ref}, as described in §1065.650. Divide the reference work by the duty cycle's time interval, $\Delta t_{duty\ cycle}$ to determine average reference power, $\overline{P}_{ref}$.

(ii) Based on your engine design, estimate maximum power, P_{max}, the design speed at maximum power, f_{nmax}, and the design maximum intake manifold boost pressure, p_{inmax} and temperature T_{inmax}. Also estimate an average fraction of power that is lost due to friction and pumping, $\overline{P}_{frict}$. Use this information along with the engine displacement volume, V_{disp}, an approximate volumetric efficiency, η_V , and the number of engine power strokes per cycle (e.g., 2-stroke or 4-stroke) to estimate the maximum raw exhaust flow rate, $\dot{n}_{exhmax}$.

(iii) Use your estimated values as described in the following example calculation:

$$\overline{x}_{exp} = \frac{e_{std} \bullet W_{ref}}{M \bullet \dot{n}_{exhmax} \bullet \Delta t_{duty\ cycle} \bullet \left(\frac{\overline{P}_{ref} + \left(\overline{P}_{frict} \bullet P_{max} \right)}{P_{max}} \right)}$$

$$\dot{n}_{exhmax} = \frac{p_{max} \bullet V_{disp} \bullet f_{nmax} \bullet \frac{2}{N_{stroke}} \bullet \eta_V}{R \bullet T_{max}}$$

Example:

$e_{NOx} = 2.5$ g/(kW•hr)

$W_{ref} = 11.883$ kW•hr

$\Delta t_{duty\ cycle} = 20$ min

$M_{NOx} = 46.0055$ g/mol

$\overline{P}_{ref} = 35.65$ kW

$P_{max} = 125$ kW

$\overline{P}_{frict} = 15$ %

$\eta_V = 0.9$

$p_{max} = 300$ kPa

$V_{disp} = 3.0$ l

$f_{nmax} = 2800$ rev/min

$N_{stroke} = 4$ 1/rev

$R = 8.314472$ J/(mol•K)

$T_{max} = 348.15$ K

$C_p = 1000$ Pa/kPa

$C_V = 1000$ l/m^3

$C_t = 60$ s/min

$C_{mol} = 1000000$ µmol/mol

$$\dot{n}_{exhmax} = \frac{300 \bullet 3.0 \bullet 2800 \bullet \frac{2}{4} \bullet 0.9 \bullet 1000}{8.314472 \bullet 348.15 \bullet 1000 \bullet 60} = 6.53 \quad \text{mol/s}$$

$$\overline{x}_{exp} = \frac{2.5 \bullet 11.883}{46.0055 \bullet 6.53 \bullet 20 \bullet 60 \bullet \left(\frac{35.65 + \left(0.15 \bullet 125 \right)}{125} \right)} \bullet 1000000$$

$\overline{x}_{exp} = 189.4$ µmol/mol

(2) To estimate the flow weighted average NMHC concentration in a CVS from a naturally aspirated nonroad spark-ignition engine at an NMHC standard of 0.5 g/kW·hr, you may do the following:

(i) Based on your engine design, approximate a maximum torque versus speed map and use it with the applicable normalized duty cycle in the standard-setting part to generate a reference duty cycle as described in §1065.610. Calculate the total reference work, W_{ref}, as described in §1065.650.

(ii) Multiply your CVS total flow rate by the time interval of the duty cycle, $\Delta t_{duty\ cycle}$. The result is the total diluted exhaust flow of the n_{dexh}.

(iii) Use your estimated values as described in the following example calculation:

$$\overline{x}_{NMHC} = \frac{e_{std} \bullet W_{ref}}{M \bullet \dot{n}_{dexh} \bullet \Delta t_{duty\ cycle}}$$

$$Example:$$

$$e_{NMHC} = 1.5 \quad \text{g/(kW•hr)}$$
$$W_{ref} = 5.389 \quad \text{kW•hr}$$
$$M_{NMHC} = 13.875389 \quad \text{g/mol}$$
$$\dot{n}_{dexh} = 6.021 \quad \text{mol/s}$$
$$\Delta t_{duty\ cycle} = 30 \quad \text{min}$$
$$C_t = 60 \quad \text{s/min}$$
$$C_{mol} = 1000000 \quad \mu\text{mol/mol}$$
$$\overline{x}_{NMHC} = \frac{1.5 \bullet 5.389}{13.875389 \bullet 6.021 \bullet 30 \bullet 60} \bullet 1000000$$
$$\overline{x}_{NMHC} = 53.8 \quad \mu\text{mol/mol}$$

§1065.605 Field test system overall performance check.

(a) This section contains equations and example calculations for statistics that are specified in §1065.920 for field-testing systems. In this section we use the letter "e" to denote the brake-specific emissions of a test interval, the superscript over-bar "¯" to denote an arithmetic mean, the subscript "$_{lab}$" to denote a laboratory result, and the subscript "$_{field}$" to denote a field-testing result.

(b) Assume that the brake-specific data in the following table was collected by performing the overall field test system check as described in §1065.920.

Table 1 of §1065.605–Example of data set from a field test system overall check

Duty cycle repeats	Test intervals (e.g. NTE events)									
	1	2	3	4	5	6	7	8	9	10
1_{field}	2.00	4.00	1.90	2.80	3.20	2.60	1.60	2.40	3.20	3.60
1_{lab}	1.90	3.60	2.00	2.70	3.00	2.50	1.50	2.30	3.00	3.40
2_{field}	2.10	3.40	1.80	2.50	3.40	2.50	1.80	2.20	3.00	3.40
2_{lab}	2.00	3.80	1.90	2.70	3.20	2.60	1.70	2.10	3.40	3.20
3_{field}	2.30	3.20	1.50	2.20	3.10	2.40	1.50	1.90	3.50	3.20
3_{lab}	2.20	3.50	1.90	2.70	3.20	2.70	1.40	2.00	3.30	3.10
4_{field}	2.40	3.30	2.10	2.80	3.30	3.00	1.40	2.10	3.10	3.20
4_{lab}	2.30	3.30	2.20	2.50	3.30	2.90	1.30	2.00	3.40	3.10
5_{field}	2.20	3.10	1.90	2.50	3.60	3.50	1.30	2.00	3.20	3.00
5_{lab}	2.10	3.20	2.10	2.40	3.20	3.30	1.30	1.80	3.30	3.30
6_{field}	2.00	3.50	1.90	2.40	3.40	2.90	1.50	2.10	3.00	3.00
6_{lab}	1.90	3.40	1.80	2.20	3.40	2.50	1.40	2.10	3.40	3.10
7_{field}	2.20	3.50	2.20	2.70	3.00	3.00	1.50	2.20	3.50	2.90
7_{lab}	2.10	3.70	2.00	2.50	3.40	3.10	1.60	2.10	3.30	3.40
Calculations										
$\boxed{\overline{e}_{field}}$	2.17	3.43	1.90	2.56	3.29	2.84	1.51	2.13	3.21	3.19
$\boxed{\overline{e}_{lab}}$	2.07	3.50	1.99	2.53	3.24	2.80	1.46	2.06	3.30	3.23
$\boxed{\Delta\overline{e} / e_{lab\ std}}$ [a]	4.0%	-2.9%	-3.4%	1.1%	1.7%	1.7%	2.3%	2.9%	-3.4%	-1.7%
$\boxed{UCL_{field}}$	2.35	3.81	2.23	2.85	3.51	3.42	1.74	2.33	3.46	3.50
$\boxed{UCL_{lab}}$	2.37	3.93	2.25	2.91	3.52	3.42	1.76	2.36	3.58	3.50
$\boxed{\Delta_{UCL}}$	-0.02	-0.12	-0.02	-0.05	-0.01	0.00	-0.02	-0.03	-0.13	-0.01

(c) For example, calculate for the first test interval $\overline{e}_{field1}$, $\overline{e}_{lab1}$, and $\Delta\overline{e}_1 / e_{lab\ std}$ as follows:

$$\overline{e}_{field\,1} = \frac{\sum_{i=1}^{N} e_{field\,i}}{N}$$

$$N = 7$$

$$\overline{e}_{field\,1} = \frac{2.00 + 2.10 + 2.30 + 2.40 + 2.20 + 2.00 + 2.20}{7}$$

$$\overline{e}_{field\,1} = 2.17 \quad g / kW \bullet hr$$

similarly,

$$\overline{e}_{lab\,1} = \frac{1.90 + 2.00 + 2.20 + 2.30 + 2.10 + 1.90 + 2.10}{7}$$

$$\overline{e}_{lab\,1} = 2.07 \quad g / kW \bullet hr$$

$$\Delta\overline{e}_1 / e_{lab\,std} = \left(\overline{e}_{field\,1} - \overline{e}_{lab\,1}\right) / e_{lab\,std}$$

$$e_{lab\,std} = 2.50 \quad g / kW \bullet hr$$

$$\Delta\overline{e}_1 / e_{lab\,std} = \left(2.17 - 2.07\right) / 2.50$$

$$\Delta\overline{e}_1 / e_{lab\,std} = 4.0\ \%$$

(d) For example, calculate for the second test interval $UCL_{field\,2}$, $UCL_{lab\,2}$, $\Delta_{UCL\,2}$ as follows:

$$UCL_{field\ 2} = \overline{e}_{field\ 2} + 2 \bullet \sigma_{e\ field\ 2}$$

see 1065.602(c) for $\sigma_{e\ field\ 2}$.

For UCL, recalculate $\overline{e}_{field\ 2}$ and $\sigma_{e\ field\ 2}$ after applying measurement allowance.

Example:

measurement allowance=0.95

$$UCL_{field\ 2} = 3.258 + 2 \bullet 0.278$$

$$UCL_{field\ 2} = 3.81 \quad g / kW \bullet hr$$

similarly,

$$UCL_{lab\ 2} = 3.500 + 2 \bullet 0.216$$

$$UCL_{lab\ 2} = 3.93 \quad g / kW \bullet hr$$

$$\Delta UCL_2 = UCL_{field\ 2} - UCL_{lab\ 2}$$

$$\Delta UCL_2 = 3.81 - 3.93$$

$$\Delta UCL_2 = -0.12 \quad g / kW \bullet hr$$

§1065.610 Test cycle generation.

(a) Maximum test speed, f_{ntest} and maximum test torque T_{test}. For all engines, calculate test speed from the power versus speed map generated as per §1065.510.

(1)Based on the power versus speed map, determine the maximum power and the speed at which maximum power occurred. Divide each recorded power by the maximum power and divide each recorded speed by the speed at which maximum power occurred. The resulting data set is a normalized data set of power versus speed. Use this data set to determine test speed. Test speed is the speed at which the normalized data set returns a maximum value of the sum of the squares of normalized speed and normalized power.

(2) For example:

$$f_{ntest} = f_{n@P_{\max}} \bullet \left[f_{nnormi} \ @ \max_{i=1}^{N} \left(f_{nnnormi}{}^{2} + P_{normi}{}^{2} \right) \right]$$

Example:

$f_{n@P_{\max}} = 2355 \quad \text{rev/min}$

$f_{nnorm1} = 1.002,\ P_{norm1} = 0.978$

$f_{nnorm2} = 1.004,\ P_{norm2} = 0.977$

$f_{nnorm3} = 1.006,\ P_{norm3} = 0.974$

$$\left(f_{nnorm1}{}^{2} + P_{norm1}{}^{2} \right) = \left(1.002^{2} + 0.978^{2} \right) = 1.960$$

$$\left(f_{nnorm2}{}^{2} + P_{norm2}{}^{2} \right) = \left(1.004^{2} + 0.977^{2} \right) = 1.963$$

$$\left(f_{nnorm3}{}^{2} + P_{norm3}{}^{2} \right) = \left(1.006^{2} + 0.974^{2} \right) = 1.961$$

$\max = 1.963 \ @ \ i = 2$

$f_{ntest} = 2355 \bullet [1.004] = 2364 \quad \text{rev/min}$

(3) For variable-speed engines, use this measured test speed—or your declared test speed as described in §1065.510—to transform normalized speeds to reference speeds as described in paragraph (b) of this section.

(4) For constant-speed engines, use the torque corresponding to this measured test speed as measured test torque—or your declared test torque as described in §1065.510—to transform normalized torques to reference torques as described in paragraph (c) of this section.

(b) Speed. Transform normalized speed values to reference values as follows:

(1) % speed. If your normalized duty cycle specifies % speed values, use your declared warm no-load idle speed and your test speed to transform the duty cycle, as follows:

$$f_{nref} = \%\ speed \bullet \left(f_{ntest} - f_{nidle} \right) + f_{nidle}$$

$$Example:$$

$$\%\ speed = 85\ \%$$

$$f_{ntest} = 2364 \quad \text{rev/min}$$

$$f_{nidle} = 650 \quad \text{rev/min}$$

$$f_{nref} = 85\ \% \bullet \left(2364 - 650 \right) + 650$$

$$f_{nref} = 2107 \quad \text{rev/min}$$

(2) A, B, and C speeds. If your normalized duty cycle specifies speed values as A, B, or C values, use your power versus speed curve to determine the lowest speed below maximum power at which 50 % of maximum power occurs. Denote this value as n_{lo}. Also determine the highest speed above maximum power at which 70 % of maximum power occurs. Denote this value as n_{hi}. Use n_{hi} and n_{lo} to calculate reference values for A, B, or C speeds as follows:

$$f_{nrefA} = 0.25 \bullet \left(n_{hi} - n_{lo} \right) + n_{lo}$$
$$f_{nrefB} = 0.50 \bullet \left(n_{hi} - n_{lo} \right) + n_{lo}$$
$$f_{nrefC} = 0.75 \bullet \left(n_{hi} - n_{lo} \right) + n_{lo}$$

$$Example:$$
$$n_{lo} = 1005 \quad \text{rev/min}$$
$$n_{lo} = 2385 \quad \text{rev/min}$$

$$f_{nrefA} = 0.25 \bullet \left(2385 - 1005 \right) + 1005$$
$$f_{nrefB} = 0.50 \bullet \left(2385 - 1005 \right) + 1005$$
$$f_{nrefC} = 0.75 \bullet \left(2385 - 1005 \right) + 1005$$

$$f_{nrefA} = 1350 \quad \text{rev/min}$$
$$f_{nrefB} = 1695 \quad \text{rev/min}$$
$$f_{nrefC} = 2040 \quad \text{rev/min}$$

(3) Intermediate speed. If your normalized duty cycle specifies a speed as "intermediate speed", use your torque versus speed curve to determine the speed at which maximum torque occurs.

(i) Determine the speed at which peak torque occurs. This is peak torque speed.

(ii) If peak torque speed is between (60 to 75) % of test speed, then your reference intermediate speed is peak torque speed.

(iii) If peak torque speed is less than 60 % of test speed, then your reference intermediate speed is 60 % of test speed.

(iv) If peak torque speed is greater than 75 % of test speed, then your reference intermediate speed is 75 % of test speed.

(c) Torque. Transform normalized torque values to reference values using your maximum torque versus speed map. For variable-speed engines you must first transform normalized speed values into reference speed values. For constant-speed engines, you need only your test torque value.

(1) % torque for variable-speed engines. For a given speed point, multiply the corresponding % torque by the maximum torque at that speed, according to your map. Linearly interpolate mapped torque values to determine torque between mapped speeds. The result is the reference torque for that speed point.

(2) % torque for constant-speed engines. Multiply a % torque value by your test torque. The result is the reference torque for that point.

(3) Permissible deviations for any engine. If your engine does not operate in-use below a certain torque under certain conditions, you may use a declared minimum torque as the reference value instead of the value calculated in paragraph (c)(1) or (2) of this section. For example, if your engine is connected to an automatic transmission, it may have a minimum torque called curb idle transmission torque (CITT). In this case, at idle conditions (i.e., 0% speed, 0 % torque), you may use CITT as a reference value instead of 0 N·m.

(d) Power. Transform normalized power values to reference speed and torque values using your maximum power versus speed map. For variable-speed engines you must first transform normalized speed values into reference speed values. For constant-speed engines, you need only your maximum power value.

(1) % power for variable-speed engines. For a given speed point, multiply the corresponding % power by the maximum power of your entire map. The result is the reference power for that speed point. You may calculate a corresponding reference torque for that point and command that reference torque instead of a reference power.

(2) % torque for constant-speed engines. Multiply a % power value by the maximum power of your entire map. The result is the reference power for that point. You may calculate a corresponding reference torque for that point and command that reference torque instead of a reference power.

(3) Permissible deviations for any engine. If your engine does not operate in-use below a certain power under certain conditions, you may use a declared minimum power as the reference value instead of the value calculated in paragraph (d)(1) or (2) of this section. For example, if your engine is directly connected to a propeller, it may have a minimum power called idle power. In this case, at idle conditions (i.e., 0% speed, 0 % torque), you may use a corresponding idle torque as a reference torque instead of 0 N·m.

§1065.630 1980 international gravity formula.

Calculate the acceleration of Earth's gravity at your latitude, as follows:

$$a_g = 9.7803267715 \times$$
$$(1 + 5.2790414\text{E-}03 \times \sin(\theta)^2 + 2.32718\text{E-}05 \times \sin(\theta)^4$$
$$+ 1.262\text{E-}07 \times \sin(\theta)^6 + 7\text{E-}10 \times \sin(\theta)^8)$$

Example:

$$\theta = 45^\circ$$

$$a_g = 9.7803267715 \times$$
$$(1 + 5.2790414\text{E-}03 \times \sin(45)^2 + 2.32718\text{E-}05 \times \sin(45)^4$$
$$+ 1.262\text{E-}07 \times \sin(45)^6 + 7\text{E-}10 \times \sin(45)^8)$$

$$a_g = 9.8178291229 \quad \text{m/s}^2$$

§1065.640 PDP and venturi (SSV and CFV) calibration calculations.

(a) Reference meter conversions. The following calibration equations use molar flow rate, $\dot{n}_{ref}$ as a reference quantity. If your reference meter outputs a flow rate in a different quantity such as standard volume rate, $\dot{V}_{stdref}$ actual volume rate, $\dot{V}_{actref}$ or mass rate, $\dot{m}_{ref}$, convert your reference meter output to molar flow rate using the following:

$$\dot{n}_{ref} = \frac{\dot{V}_{stdref} \bullet P_{std}}{T_{std} \bullet R} = \frac{\dot{V}_{actref} \bullet P_{act}}{T_{act} \bullet R} = \frac{\dot{m}_{ref}}{M_{mix}}$$

Examples :

$\dot{V}_{stdref} = 1000.00$ ft^3/min

$P_{std} = 29.9213$ in Hg @ 32 ^{o}F

$T_{std} = 68.0$ ^{o}F

$R = 8.314472$ J/(mol•K)

$C_p = 3386.38$ Pa/in Hg @ 32 ^{o}F

$C_T = (T + 459.67)/1.8$ K/^{o}F

$C_V = 35.314662$ ft^3/m^3

$C_t = 60$ s/min

$$\dot{n}_{ref} = \frac{1000.00 \bullet 29.9213 \bullet 3386.38}{\left[(68.0 + 459.67)/1.8\right] \bullet 8.314472 \bullet 35.314662 \bullet 60} = 19.619 \quad \text{mol/s}$$

$\dot{m}_{ref} = 17.2683$ kg/min

$M_{mix} = 28.7805$ g/mol

$C_m = 1000$ g/kg

$$\dot{n}_{ref} = \frac{17.2683 \bullet 1000}{28.7805 \bullet 60} = 10.000 \quad \text{mol/s}$$

(b) PDP calibration calculations. For each restrictor position, calculate the following values, from the mean values determined in §1065.340, as follows:

(1) PDP volume pumped per revolution, V_{rev} m^3/rev:

$$V_{rev} = \frac{\overline{\dot{n}}_{ref} \bullet R \bullet \overline{T}_{in}}{\overline{P}_{in} \bullet \overline{f}_{PDP}}$$

Example:

$$\overline{\dot{n}}_{ref} = 25.096 \quad \text{mol/s}$$
$$R = 8.314472 \quad \text{J/mol} \cdot \text{K}$$
$$\overline{T}_{in} = 299.5 \quad \text{K}$$
$$\overline{P}_{in} = 98.290 \quad \text{kPa}$$
$$\overline{f}_{PDP} = 1205.1 \quad \text{rev/min}$$
$$C_t = 60 \quad \text{s/min}$$
$$C_p = 1000 \quad \left(\text{J/m}^3\right)/\text{kPa}$$
$$V_{rev} = \frac{60 \bullet 25.096 \bullet 8.314472 \bullet 299.5}{1000 \bullet 98.290 \bullet 1205.1}$$

$$V_{rev} = 0.03166 \quad \text{m}^3/\text{rev}$$

(2) PDP slip correction factor, Ks s/rev:

$$K_s = \frac{1}{\overline{f}_{PDP}} \bullet \sqrt{\frac{\overline{P}_{out} - \overline{P}_{in}}{\overline{P}_{out}}}$$

Example:

$$\overline{f}_{PDP} = 1205.1 \quad \text{rev/min}$$
$$\overline{P}_{out} = 100.103 \quad \text{kPa}$$
$$\overline{P}_{in} = 98.290 \quad \text{kPa}$$
$$C_t = 60 \quad \text{s/min}$$
$$K_s = \frac{60 \bullet 1}{1205.1} \bullet \sqrt{\frac{100.103 - 98.290}{100.103}}$$

$$K_s = 0.006700 \quad \text{s/rev}$$

(3) Perform a least-squares regression of PDP volume pumped per revolution, V_{rev} versus PDP slip correction factor, K_s, by calculating slope, a_1 and intercept a_0 as described in §1065.602.

(4) Repeat the procedure in paragraphs (a)(1) through (3) of this section for every speed that you run your PDP.

(5) Use the slopes and intercepts to calculate flow rate during emission testing as described in §1065.642.

(c) Venturi governing equations and allowable assumptions. Because a subsonic venturi (SSV)and a critical-flow venturi (CFV) both operate similarly, their governing equations are the same, except for the equation describing their pressure ratio r (i.e., r_{SSV} versus r_{CFV}). The following symbols are used for the following quantities in subsequent calculations:

A_t = venturi throat cross-sectional area

C_d = discharge coefficient

C_f = flow coefficient

C_m = mass conversion factor

C_p = pressure conversion factor

d_t = venturi throat diameter

M_{mix} = molar mass of gas mixture

$\dot{n}$ = molar flow rate

p_{in} = venturi inlet absolute static pressure

r = pressure ratio

T_{in} = venturi inlet absolute temperature

Z = compressibility factor

β = ratio of venturi throat to inlet diameters

Δp = differential static pressure; venturi inlet minus venturi throat

γ = ratio of specific heats of gas mixture

$$\dot{n} = C_d \bullet C_f \bullet \frac{A_t \bullet p_{in}}{\sqrt{Z \bullet M_{mix} \bullet R \bullet T_{in}}}$$

$$C_f = \left[\frac{2 \bullet \gamma \bullet \left(1 - r^{\frac{\gamma-1}{\gamma}} \right)}{(\gamma - 1) \bullet \left(r^{\frac{-2}{\gamma}} - \beta^4 \right)} \right]^{\frac{1}{2}}$$

$$r_{SSV} = 1 - \frac{\Delta p}{p_{in}}$$

$$r_{CFV}^{\frac{1-\gamma}{\gamma}} + \left(\frac{\gamma - 1}{2} \right) \bullet \beta^4 \bullet r_{CFV}^{\frac{2}{\gamma}} = \frac{\gamma + 1}{2}$$

(1) You may iterate to solve for r_{CFV} and subsequently calculate C_f for a CFV, C_{fCFV}, or you may determine C_{fCFV} from Table 1 of §1065.640, based on your β and γ.

Table 1 of §1065.640– C_{fCFV} versus β and γ

C_{fCFV}		
β	γ_{exh} = 1.385	γ_{dexh} = γ_{air} = 1.399
0.000	0.6822	0.6846
0.400	0.6857	0.6881
0.500	0.6910	0.6934
0.550	0.6953	0.6977
0.600	0.7011	0.7036
0.625	0.7047	0.7072
0.650	0.7089	0.7114
0.675	0.7137	0.7163
0.700	0.7193	0.7219
0.720	0.7245	0.7271
0.740	0.7303	0.7329
0.760	0.7368	0.7395
0.770	0.7404	0.7431
0.780	0.7442	0.7470
0.790	0.7483	0.7511
0.800	0.7527	0.7555
0.810	0.7573	0.7602
0.820	0.7624	0.7652
0.830	0.7677	0.7707
0.840	0.7735	0.7765
0.850	0.7798	0.7828

(2) Permissible assumptions. You may make several simplifying assumptions of the governing equations.

(i)For emission testing over the full ranges of raw exhaust, diluted exhaust and dilution air, you may assume that the gas mixture behaves as an ideal gas: Z=1.

(ii) For the full range of raw exhaust you may assume a constant ratio of specific heats of γ=1.385.

(iii) For the full range of diluted exhaust and air (e.g., calibration air or dilution air), you may assume a constant ratio of specific heats of γ=1.399.

(iv) For the full range of diluted exhaust and air, you may assume the molar mass of the mixture is a function only of the amount of water in the dilution air or calibration air, x_{H2O},determined as described in §1065.645, as follows:

$$M_{mix} = M_{air} \bullet (1 - x_{H2O}) + M_{H2O} \bullet x_{H2O}$$

$$Example:$$
$$M_{air} = 28.96559 \quad \text{g/mol}$$
$$x_{H2O} = 0.0169 \quad \text{mol/mol}$$
$$M_{H2O} = 18.01528 \quad \text{g/mol}$$

$$M_{mix} = 28.96559 \bullet (1 - 0.0169) + 18.01528 \bullet 0.0169$$
$$M_{mix} = 28.7805 \quad \text{g/mol}$$

(v) For the full range of diluted exhaust and air, you may assume a constant molar mass of the mixture, M_{mix} such that the assumed molar mass differs from the actual molar mass by no more than ±1 % for all calibration and all testing. This might occur if you sufficiently control the amount of water in calibration air and in dilution air, and this might occur if you remove sufficient water from both calibration air and dilution air. Table 2 of this section gives examples of permissible emission testing dilution air dewpoints versus calibration air dewpoints.

Table 2 of §1065.640–Permissible ranges of dilution air dewpoint versus calibration dewpoint where a constant M_{mix} may be assumed

If calibration T_{dew}	Assume constant M_{mix}	For emissions test T_{dew} range[a]
°C	g/mol	°C
dry	28.96559	dry to 18
0	28.89263	dry to 21
5	28.86148	dry to 22
10	28.81911	dry to 24
15	28.76224	dry to 26
20	28.68685	-8 to 28
25	28.58806	12 to 31
30	28.46005	23 to 34

[a] Range valid for all calibration and emissions testing over the barometric pressure range (80.000 to103.325) kPa.

(3) Calibration equation for SSV and CFV. For each data point collected in §1065.340, solve for C_d. The following example illustrates the use of the governing equations for the SSV. Note that for the case of the CFV, the equation for C_d would be the same. However, for C_f you would use your values of β and γ to determine C_f iteratively as described in paragraph (b)(1) of this section, or you would look up a constant value of C_f for all calibration and testing in Table 1 of §1065.640.

$$C_d = \dot{n}_{ref} \bullet \frac{\sqrt{Z \bullet M_{mix} \bullet R \bullet T_{in}}}{C_f \bullet A_t \bullet p_{in}}$$

$$C_f = \left[\frac{2 \bullet \gamma \bullet \left(1 - r^{\frac{\gamma-1}{\gamma}}\right)}{(\gamma - 1) \bullet \left(r^{\frac{-2}{\gamma}} - \beta^4\right)} \right]^{\frac{1}{2}}$$

$$r_{SSV} = 1 - \frac{\Delta p}{p_{in}}$$

Example:

$\dot{n}_{ref} = 57.625$ mol/s

$Z = 1$

$M_{mix} = 28.7805$ g/mol

$R = 8.314472$ J/mol•K

$T_{in} = 298.15$ K

$A_t = 0.01824$ m^2

$p_{in} = 99.132$ kPa

γ=1.399

β=0.8

$\Delta p = 2.312$ kPa

$C_m = 1000$ g/kg

$C_p = 1000$ Pa/kPa

$$r_{SSV} = 1 - \frac{\Delta p}{p_{in}}$$

$$r_{SSV} = 0.977$$

$$C_f = \left[\frac{2 \bullet 1.399 \bullet \left(1 - 0.977^{\frac{1.399-1}{1.399}}\right)}{(1.399 - 1) \bullet \left(0.977^{\frac{-2}{1.399}} - 0.8^4\right)} \right]^{\frac{1}{2}}$$

$$C_f = 0.274$$

$$C_d = 57.625 \bullet \frac{\sqrt{1 \bullet 28.7805 \bullet 8.314472 \bullet 298.15 / 1000}}{0.274 \bullet 0.01824 \bullet 99.132 \bullet 1000}$$

$$C_d = 0.981$$

(i) SSV calibration. For each data point collected in §1065.340, also calculate $Re^{\#}$ at the throat of the venturi. Because the dynamic viscosity, μ. is needed to compute $Re^{\#}$, you may use your own fluid viscosity model to determine μ, using good engineering judgment. Alternatively, you may use the Sutherland three coefficient viscosity model for air at moderate pressures and temperatures. An example of this is shown in the following example calculation for $Re^{\#}$:

$$Re^{\#} = \frac{4 \bullet M_{mix} \bullet \dot{n}_{ref}}{\pi \bullet d \bullet \mu}$$

Sutherland model:

$$\mu = \mu_0 \bullet \left(\frac{T_{in}}{T_0} \right)^{\frac{3}{2}} \bullet \left(\frac{T_0 + S}{T_{in} + S} \right)$$

$$\mu_0 = 1.7894 \bullet 10^{-5} \quad \text{kg/(m•s)}$$

$$T_0 = 273.11 \quad \text{K}$$

$$S = 110.56 \quad \text{K}$$

$$Example:$$

$$M_{mix} = 28.7805 \quad \text{g/mol}$$

$$\dot{n}_{ref} = 57.625 \quad \text{mol/s}$$

$$d_t = 0.1524 \quad \text{m}$$

$$T_{in} = 298.15 \quad \text{K}$$

$$C_m = 1000 \quad \text{g/kg}$$

$$\mu = 1.7894 \bullet 10^{-5} \bullet \left(\frac{298.15}{273.11} \right)^{\frac{3}{2}} \bullet \left(\frac{273.11 + 110.56}{298.15 + 110.56} \right)$$

$$\mu = 1.916 \bullet 10^{-5} \quad \text{kg/(m•s)}$$

$$Re^{\#} = \frac{4 \bullet 28.7805 \bullet 57.625}{3.14159 \bullet 0.1524 \bullet 1.916 \bullet 10^{-5} \bullet 1000}$$

$$Re^{\#} = 7.2317 \bullet 10^{5}$$

(ii) Create a regression equation to calculate C_d versus $Re^{\#}$. You may use any mathematical expression such as a least-square polynomial or a power series. The regression equation must cover the flow range of $Re^{\#}$ expected during testing.

(iii) The regression equation must predict C_d values within ±0.5 % of the individual C_d values determined from calibration.

(iv) If the ±0.5 % criterion is met, transfer the regression equation to the SSV real time calculation system for use in emission tests as described in §1065.642. Do not use the equation beyond the upper and lower calibration points used to determine the equation.

(v) If the ±0.5 % criterion is not met for an individual data point, based upon good engineering judgment, you may omit data points and recalculate the regression equation, provided you use at least 7 points that meet the criterion. Do not use the equation beyond the upper and lower calibration points used to determine the equation. If omitting points does not resolve outliers, take corrective action. For example, check for leaks or repeat the calibration process. If you must repeat the process, we recommend applying tighter tolerances to measurements and allow more time for flows to stabilize.

(vi) CFV calibration. Calculate the mean and standard deviation of all the C_d as described in §1065.602. If the standard deviation is less than or equal to 0.3 % of the mean, use the mean C_d in flow equations as described in §1054.642, and use the CFV only down to the lowest inlet pressure measured during calibration. If the standard deviation exceeds 0.3 % of the mean, omit the data point collected at the lowest venturi inlet pressure. Recalculate the mean and standard deviation and determine if the new standard deviation is less than or equal to 0.3 % of the new mean. If it is, then use that mean C_d in flow calculations and use the CFV down to the lowest inlet pressure of the remaining data points. If the standard deviation still exceeds 0.3 % of the mean, continue omitting the data point at the lowest inlet pressure and recalculating the standard deviation and the mean. If the number of remaining data points becomes less than seven, take corrective action. For example, check for leaks or repeat the calibration process. If you must repeat the process, we recommend applying tighter tolerances to measurements and allow more time for flows to stabilize.

§1065.642 SSV, CFV, and PDP flow rate calculations.

(a) PDP flow rate. Based on the slopes and intercepts calculated in §1065.640 for the speed that you operate your PDP during an emission test, calculate flow rate, $\dot{n}$ as follows:

$$\dot{n} = f_{PDP} \bullet \frac{p_{in} \bullet V_{rev}}{R \bullet T_{in}}$$

$$V_{rev} = \frac{a_1}{f_{PDP}} \bullet \sqrt{\frac{p_{out} - p_{in}}{p_{in}}} + a_0$$

Example:

$f_{PDP} = 755$ rev/min

$p_{in} = 98.575$ kPa

$R = 8.314472$ J/(mol•K)

$T_{in} = 323.5$ K

$a_1 = 50.43$

$a_0 = 0.056$

$p_{out} = 99.950$ kPa

$C_p = 1000$ (J/m^3)/kPa

$C_t = 60$ s/min

$$V_{rev} = \frac{50.43}{755} \bullet \sqrt{\frac{99.950 - 98.575}{98.575}} + 0.056$$

$V_{rev} = 0.06389$ m^3/rev

$$\dot{n} = 755 \bullet \frac{98.575 \bullet 0.06389}{8.314472 \bullet 323.5} \bullet \frac{1000}{60}$$

$\dot{n} = 29.464$ mol/s

(b) SSV flow rate. Based on the C_d versus $Re^{\#}$ regression you determined as described in §1065.640, calculate SSV flow rate, $\dot{n}$ during an emission test as follows:

$$\dot{n} = C_d \bullet C_f \bullet \frac{A_t \bullet p_{in}}{\sqrt{Z \bullet M_{mix} \bullet R \bullet T_{in}}}$$

$$C_d = 0.998 - 0.00653 \bullet \sqrt{\frac{10^6}{Re^{\#}}}$$

$$C_f = \left[\frac{2 \bullet \gamma \bullet \left(1 - r^{\frac{\gamma-1}{\gamma}}\right)}{(\gamma - 1) \bullet \left(r^{\frac{-2}{\gamma}} - \beta^4\right)} \right]^{\frac{1}{2}}$$

$$r_{SSV} = 1 - \frac{\Delta p}{p_{in}}$$

Example:

$A_t = 0.01824 \quad \text{m}^2$

$p_{in} = 99.132 \quad \text{kPa}$

$Z = 1$

$M_{mix} = 28.7805 \quad \text{g/mol}$

$R = 8.314472 \quad \text{J/mol•K}$

$T_{in} = 298.15 \quad \text{K}$

$Re^{\#} = 7.232 \bullet 10^5$

$\gamma = 1.399$

$\beta = 0.8$

$\Delta p = 2.312 \quad \text{kPa}$

$C_m = 1000 \quad \text{g/kg}$

$C_p = 1000 \quad \text{Pa/kPa}$

$$r_{SSV} = 1 - \frac{2.312}{99.132}$$

$$r_{SSV} = 0.977$$

$$C_f = \left[\frac{2 \bullet 1.399 \bullet \left(1 - 0.977^{\frac{1.399-1}{1.399}}\right)}{(1.399 - 1) \bullet \left(0.977^{\frac{-2}{1.399}} - 0.8^4\right)} \right]^{\frac{1}{2}}$$

$$C_f = 0.274$$

$$C_d = 0.998 - 0.00653 \bullet \sqrt{\frac{10^6}{7.232 \bullet 10^5}}$$

$$C_d = 0.990$$

$$\dot{n} = 0.990 \bullet 0.274 \bullet \frac{0.01824 \bullet 99.132 \bullet 1000}{\sqrt{1 \bullet 28.7805 \bullet 8.314472 \bullet 298.15 / 1000}}$$

$$\dot{n} = 58.173 \quad \text{mol/s}$$

(c) CFV flow rate. Based on the mean C_d and other constants you determined as described in §1065.640, calculate CFV flow rate, $\dot{n}$ during an emission test as follows:

$$\dot{n} = C_d \bullet C_{fCFV} \bullet \frac{A_t \bullet p_{in}}{\sqrt{Z \bullet M_{mix} \bullet R \bullet T_{in}}}$$

$$\begin{aligned}
&Example: \\
&C_d = 0.985 \\
&C_{fCFV} = 0.7219 \\
&A_t = 0.00456 \quad \text{m}^2 \\
&p_{in} = 98.836 \quad \text{kPa} \\
&Z = 1 \\
&M_{mix} = 28.7805 \quad \text{g/mol} \\
&R = 8.314472 \quad \text{J/mol•K} \\
&T_{in} = 378.15 \quad \text{K} \\
&\gamma = 1.399 \\
&\beta = 0.7 \\
&C_m = 1000 \quad \text{g/kg} \\
&C_p = 1000 \quad \text{Pa/kPa}
\end{aligned}$$

$$\dot{n} = 0.985 \bullet 0.7219 \bullet \frac{0.00456 \bullet 98.836 \bullet 1000}{\sqrt{1 \bullet 28.7805 \bullet 8.314472 \bullet 378.15 / 1000}}$$

$$\dot{n} = 33.690 \quad \text{mol/s}$$

§1065.645 Amount of water in an ideal gas.

(a)For various emission calculations, you must calculate the amount of water in an ideal gas, x_{H2O} . Based on the measured dewpoint, T_{dew} or frost point T_{ice} and the triple point of water, T_0, use the formulations of the World Meteorological Organization (General Meteorological Standards and Recommended Practices, Appendix A, WMO Technical Regulations, WMO-No. 49, 2000, incorporated by reference at §1065.1010), to first calculate the pressure of water, p_{H2O} in an ideal gas as follows:

$$p_{sat} = \frac{10\wedge\left[\begin{array}{l} 10.79574\bullet\left(1-\frac{T_0}{T_{dew}}\right)-5.02800\bullet\log\left(\frac{T_{dew}}{T_0}\right)+1.50475\bullet10^{-4}\bullet\left(1-10^{-8.2969\bullet\left(\frac{T_{dew}}{T_0}-1\right)}\right) \\ +0.42873\bullet10^{-3}\bullet\left(10^{-4.76955\bullet\left(1-\frac{T_0}{Tdew}\right)}-1\right)+0.78614 \end{array}\right]}{10}$$

$$T_0 = 273.16 \quad K$$

$$Example:$$

$$T_{dew} = 9.5 \quad {}^{\circ}C$$

$$T_{dew} = 9.5 + 273.15 = 282.65 \quad K$$

$$p_{sat} = \frac{10\wedge\left[\begin{array}{l} 10.79574\bullet\left(1-\frac{273.16}{282.65}\right)-5.02800\bullet\log\left(\frac{282.65}{273.16}\right)+1.50475\bullet10^{-4}\bullet\left(1-10^{-8.2969\bullet\left(\frac{282.65}{273.16}-1\right)}\right) \\ +0.42873\bullet10^{-3}\bullet\left(10^{-4.76955\bullet\left(1-\frac{273.16}{282.65}\right)}-1\right)+0.78614 \end{array}\right]}{10}$$

$$p_{sat} = 1.186 \quad kPa$$

And for frost point:

$$p_{H2O} = \frac{10\wedge\left[-9.09685\bullet\left(\frac{T_0}{T_{ice}}-1\right)-3.56654\bullet\log\left(\frac{T_0}{T_{ice}}\right)+0.87682\bullet\left(1-\frac{T_{ice}}{T_0}\right)+0.78614\right]}{10}$$

$$T_0 = 273.16 \quad K$$

$$Example:$$

$$T_{ice} = -15.4 \quad {}^{\circ}C$$

$$T_{ice} = -15.4 + 273.15 = 257.75 \quad K$$

$$p_{H2O} = \frac{10\wedge\left[-9.09685\bullet\left(\frac{273.16_0}{257.75}-1\right)-3.56654\bullet\log\left(\frac{273.16_0}{257.75}\right)+0.87682\bullet\left(1-\frac{257.75}{273.16_0}\right)+0.78614\right]}{10}$$

$$p_{H2O} = 0.1591 \quad kPa$$

The equation that uses dewpoint has been experimentally confirmed from (0 to 100) °C, and the same formula may be used over super-cooled water from (-50 to 0) °C with insignificant error. The equation for frostpoint is valid from (-100 to 0) °C.

(b) You may also use other formulas to convert dewpoint or frostpoint to p_{H2O}, provided that their use does not affect your ability to show compliance with the applicable standards. Formulas such as the commonly known the Goff-Gratch formula may be used. Note however that the Wexler-Greenspan formula that we previously specified is not valid for dewpoints below 0 °C.

(c) To calculate the amount of water in an ideal gas, divide p_{H2O} by the absolute pressure (for example, barometric pressure) at which you measured dewpoint or frostpoint, as follows:

$$x_{H2O} = \frac{p_{sat}}{p_{total}}$$

$$Example:$$

$$p_{sat} = 1.186 \quad kPa$$
$$p_{total} = 99.980 \quad kPa$$

$$x_{H2O} = \frac{1.186}{99.980}$$

$$x_{H2O} = 0.01186 \quad \text{mol/mol}$$

§1065.650 Emission calculations.

(a) General. Calculate brake-specific emissions over each test interval in a duty cycle. Refer to the standard-setting part for any calculations you might need to determine a composite result, such as a calculation that weights and sums the results of individual test intervals in a duty cycle. We specify three ways to calculate brake-specific emissions, as follows:

(1) Calculate the total mass of emissions and then divide it by the total work generated over the test interval. In this section, we describe how to calculate the total mass of different emissions. We describe how to calculate total work. Divide the total mass by the total work to determine brake-specific emissions, as follows:

$$e = \frac{m}{W}$$

$$Example:$$

$$m_{NOx} = 64.975 \quad \text{g}$$
$$W = 25.783 \quad \text{kW•hr}$$

$$e_{NOx} = \frac{64.975}{25.783}$$

$$e_{NOx} = 2.520 \quad \text{g/(kW•hr)}$$

(2) For steady-state testing, you may calculate the ratio of emission mass rate to power. In this special case you determine a mean mass rate of emissions during steady-state operation, and then divide that rate by the steady-state mean power. The result is a brake-specific emission value calculated as follows:

$$e = \frac{\overline{\dot{m}}}{\overline{P}}$$

$$Example:$$

$$\overline{\dot{m}}_{NMHC} = 2.885 \quad \text{mg/s}$$
$$\overline{P} = 54.342 \quad \text{kW}$$
$$C_t = 3600 \quad \text{s/hr}$$
$$C_m = 1000 \quad \text{mg/g}$$
$$e_{NMHC} = \frac{2.885 \bullet 3600}{54.342 \bullet 1000}$$

$$e_{NMHC} = 0.191 \quad \text{g/(kW}\bullet\text{hr)}$$

(3) Calculate the ratio of total mass to total work. This is a special case in which you use a signal linearly proportional to raw exhaust flow rate to determine a value proportional to total emissions. You then use the same linearly proportional signal to determine total work using a chemical balance of fuel, intake air and exhaust as described in §1065.655, plus information about your engine's brake-specific fuel consumption. In this case we do not require any flow meter to be accurate, but we do require any flow meter you use must meet the applicable linearity and repeatability specifications in subpart D (performance checks) or subpart J (field testing) of this part. The result is a brake-specific emission value calculated as follows:

$$e = \frac{\tilde{m}}{\tilde{W}}$$

$$Example:$$

$$\tilde{m}_{CO} = 805.5 \quad \sim \text{g}$$
$$\tilde{W} = 52.102 \quad \sim \text{kW}\bullet\text{hr}$$

$$e_{CO} = \frac{805.5}{52.102}$$

$$e_{CO} = 2.520 \quad \text{g/(kW}\bullet\text{hr)}$$

(b) Total mass of emissions. To determine brake-specific emissions for a test interval under paragraph (a)(1) of this section, calculate the total mass of each emission. To calculate the total mass of an emission, you multiply a concentration by its respective flow. Follow these steps to calculate total mass of emissions:

(1) Concentration corrections and calculations. Before multiplying concentrations by a flow, perform the following calculations on recorded concentrations, in order, as follows:

(i) Correct all concentrations for drift, including dilution air background concentrations. Correct for drift as described in §1065.657.

(ii) Optionally, correct all concentrations for instrument noise, including dilution air background concentrations. Correct for noise as described in §1065.658.

(iii) Correct all concentrations measured on a "dry" basis to a "wet" basis, including dilution air background concentrations. Correct for drift as described in §1065.659.

(iv) Calculate all NMHC concentrations, including dilution air background concentrations as described in §1065.660.

(v) If you performed an emission test with an oxygenated fuel (see subpart E or this part) calculate any NMHCE concentrations including dilution air background concentrations as described in §1065.665.

(2) Continuous sampling. For continuous sampling you frequently record a continuously updated concentration signal. You may measure this concentration from a changing flow rate or a constant flow rate, as follows:

(i) If you continuously sample from a changing exhaust flow rate, synchronously multiply it by the flow rate of the flow from which you extracted it. We consider the following flows changing flows that require a continuous multiplication of concentration times flow rate: raw exhaust, exhaust diluted with a constant flow rate of dilution air, and CVS dilution with a CVS flow meter that does not have an upstream heat exchanger or electronic flow control. Account for dispersion and time alignment as described in

§1065.201. This multiplication results in the flow rate of the emission itself. Integrate the emission flow rate over a test interval to determine the total emission. If the total emission is a molar quantity, convert this quantity to a mass by multiplying it by its molar mass, *M*. The result is the mass of the emission, *m*. The following is a continuous sampling with variable flow example:

$$m = M \bullet \sum_{i=1}^{N} x_i \bullet \dot{n}_i \bullet \Delta t$$

$$\Delta t = \frac{1}{f_{record}}$$

$$Example:$$

$$M_{NMHC} = 13.875389 \quad \text{g/mol}$$
$$N = 1200$$
$$x_{NMHC1} = 84.5 \quad \mu\text{mol/mol}$$
$$x_{NMHC2} = 86.0 \quad \mu\text{mol/mol}$$
$$\dot{n}_{exh1} = 2.876 \quad \text{mol/s}$$
$$\dot{n}_{exh2} = 2.224 \quad \text{mol/s}$$

$$f_{record} = 1 \quad \text{Hz}$$
$$C_{mol} = 1000000 \quad \mu\text{mol/mol}$$
$$\Delta t = \frac{1}{1} = 1 \quad \text{s}$$

$$m_{NMHC} = 13.875389 \bullet \left(84.5 \bullet 2.876 + 86.0 \bullet 2.224 + \ldots + x_{NMHC1200} \bullet \dot{n}_{exh1200} \bullet\right) \bullet 1 \bullet 1000000$$
$$m_{NMHC} = 25.23 \quad \text{g}$$

(ii)If you continuously sample from a constant exhaust flow rate, you may calculate the mean concentration recorded over the test interval and treat the mean as a batch sample (e.g., bag sample) as described in paragraph (b)(3)(ii) of this section. We consider the following flows constant exhaust flows: CVS diluted exhaust with a CVS flow meter that has either an upstream heat exchanger, electronic flow control, or both.

(3) Batch sampling. The concentration may also be a single concentration from a proportionally extracted batch sample (e.g., a bag). In this case, you multiply the mean concentration of the batch sample by the total flow from which the sample was extracted. You may calculate total flow by integrating a changing flow rate or by determining the mean of a constant flow rate, as follows:

(i) If you batch sample from a changing exhaust flow rate, extract a sample proportional to the changing exhaust flow rate. We consider the following flows changing flows that require proportional sampling: raw exhaust, exhaust diluted with a constant flow rate of dilution air, and CVS dilution with a CVS flow meter that does not have an upstream heat exchanger or electronic flow control. Integrate the flow rate over a test interval to determine the total flow from which you extracted the proportional sample. Multiply the mean concentration of the batch sample by the total flow from which the sample was extracted. If the total emission is a molar quantity, convert this quantity to a mass by multiplying it by its molar mass. If the total emission is a molar quantity, convert this quantity to a mass by multiplying it by its molar mass, *M*. The result is the mass of the emission, *m*. In the case of PM emissions, where the mean PM concentration is already in units of mass per mole of sample, $\overline{M}_{PM}$, simply multiply the total flow by $\overline{M}_{PM}$. The result is the total mass of PM, m_{PM} . The following is a batch sample extracted from a variable flow rate example:

$$m = M \bullet \overline{x} \bullet \sum_{i=1}^{N} \dot{n}_i \bullet \Delta t$$

$$\Delta t = \frac{1}{f_{record}}$$

$$Example:$$

$$M_{NOx} = 46.0055 \quad \text{g/mol}$$

N=9000

$$\overline{x}_{NOx} = 85.6 \quad \mu\text{mol/mol}$$

$$\dot{n}_{dexh1} = 25.534 \quad \text{mol/s}$$

$$\dot{n}_{dexh2} = 26.950 \quad \text{mol/s}$$

$$f_{record} = 5 \quad \text{Hz}$$

$$C_{mol} = 1000000 \quad \mu\text{mol/mol}$$

$$\Delta t = \frac{1}{5} = 0.2 \quad \text{s}$$

$$m_{NOx} = 46.0055 \bullet 85.6 \left(25.534 + 26.950 + \ldots + \dot{n}_{dexh9000}\right) \bullet 0.2 \bullet 1000000$$

$$m_{NOx} = 4.201 \quad \text{g}$$

(ii) If you batch sample from a constant exhaust flow rate, extract a sample at a constant flow rate. We consider the following flows constant exhaust flows: CVS diluted exhaust with a CVS flow meter that has either an upstream heat exchanger, electronic flow control, or both. Determine the mean flow rate from which you extracted the constant flow rate sample. Multiply the mean concentration of the batch sample by the mean flow rate of the exhaust from which the sample was extracted, and multiply the result by the time of the test interval. If the total emission is a molar quantity, convert this quantity to a mass by multiplying it by its molar mass, *M*. The result is the mass of the emission, *m*. In the case of PM emissions, where the mean PM concentration is already in units of mass per mole of sample, $\overline{M}_{PM}$, simply multiply the total flow by $\overline{M}_{PM}$. The result is the total mass of PM, m_{PM} .

(iii) The following is a batch sample extracted from a constant flow rate example:

$$m = M \bullet \overline{x} \bullet \overline{\dot{n}} \bullet \Delta t$$

$$M \bullet \overline{x} = \overline{M}_{PM}$$

$$Example:$$

$$\overline{M}_{PM} = 0.144 \quad \text{mg/mol}$$

$$\overline{\dot{n}}_{dexh} = 57.692 \quad \text{mol/s}$$

$$\Delta t = 20 \quad \text{min}$$

$$C_t = 60 \quad \text{s/min}$$

$$C_m = 1000 \quad \text{mg/g}$$

$$m_{PM} = \frac{0.144 \bullet 57.692 \bullet 20 \bullet 60}{1000}$$

$$m_{PM} = 37.661 \quad \text{g}$$

(4) <u>Diluted exhaust sampling; continuous or batch</u>. If you sampled emissions from diluted exhaust, you must consider two additional steps.

(i) If you diluted a sample at a constant ratio of dilution air flow rate to exhaust flow rate (raw or dilute), you must multiply your total mass emissions by the sum of the dilution ratio, *DR*, plus one. The following is an example of a secondary dilution system for sampling PM from a CVS:

$$m_{PM} = m_{PMdil} \bullet (DR + 1)$$

$$Example:$$
$$m_{PMdil} = 6.853 \quad \text{g}$$
$$DR = 5:1$$

$$m_{PM} = 6.853 \bullet (5 + 1)$$
$$m_{PM} = 41.118 \quad \text{g}$$

(ii) You may optionally measure background emissions in dilution air by either continuous sampling or batch sampling. You may then subtract the background you would have otherwise attributed to your engine as described in §1065.667.

(5) NO_x correction for intake-air humidity. Correct the total mass of NO_x based on intake-air humidity as described in §1065.670. Note that if you performed diluted exhaust sampling, perform this correction after correcting for any dilution air background.

(c) Total work. To determine brake-specific emissions for a test interval as described in paragraph (a)(1) of this section, you must also calculate the total work. To calculate total work, multiply the feedback engine speed by its respective feedback torque and apply the appropriate units conversion factors. This results in the power of the engine. Integrate the power over a test interval to determine the total work. If your standard is in the units g/hp·hr use the following conversion factor: 1 hp =550 ft lbf/s = 0.77456999 kW, and round the resulting value. The following is an example:

$$W = \sum_{i=1}^{N} P_i \bullet \Delta t$$

$$P_i = f_{ni} \bullet T_i$$

$$\Delta t = \frac{1}{f_{record}}$$

$example:$

$N = 9000$

$f_{n1} = 1800.2 \quad \text{rev/min}$

$f_{n2} = 1805.8 \quad \text{rev/min}$

$T_1 = 177.23 \quad \text{N}\bullet\text{m}$

$T_2 = 175.00 \quad \text{N}\bullet\text{m}$

$C_{rev} = 2\bullet\pi \quad \text{rad/rev}$

$C_{t1} = 60 \quad \text{s/min}$

$C_p = 1000 \quad (\text{N}\bullet\text{m/s})/\text{kW}$

$f_{record} = 5 \quad \text{Hz}$

$C_{t2} = 3600 \quad \text{s/hr}$

$$P_1 = \frac{1800.2 \bullet 177.23 \bullet 2 \bullet 3.14159}{60 \bullet 1000}$$

$P_1 = 33.41 \quad \text{kW}$

$P_2 = 33.09 \quad \text{kW}$

$$\Delta t = \frac{1}{5} = 0.2 \quad \text{s}$$

$$W = \frac{\left(33.41 + 33.09 + \ldots + P_{9000}\right) \bullet 0.2}{3600}$$

$W = 16.875 \quad \text{kW}\bullet\text{hr}$

(d) Steady-state mass rate divided by power. To determine steady-state brake-specific emissions for a test interval as described in paragraph (a)(2) of this section, calculate the steady-state mass rate of the emission. Then calculate the steady-state power. Divide the mean mass rate of the emission by the mean power to determine steady-state brake-specific emissions.

(1) To calculate the mass rate of an emission, multiply its mean concentration (e.g., $\overline{x}$) by its respective mean flow rate, $\overline{\dot{n}}$. If the result is a molar flow rate, convert this quantity to a mass rate by multiplying it by its molar mass, *M*. The result is the mean mass rate of the emission, $\overline{\dot{m}}$. In the case of PM emissions, where the mean PM concentration is already in units of mass per mole of sample, $\overline{M}_{PM}$, simply multiply the mean flow rate, $\overline{\dot{n}}$ by $\overline{M}_{PM}$. The result is the mass rate of PM, $\dot{m}_{PM}$.

(2) To calculate power, multiply mean engine speed, $\overline{f}_n$, by its respective mean torque, $\overline{T}$, and apply the appropriate units conversion factors. The results is the mean power of the engine, $\overline{P}$.

(3) Divide emission mass rate by power to calculate a brake-specific emission result as described in paragraph (a)(2) of this section.

(4) The following is an example of how to calculate mean mass rate and mean power:

$$\bar{\dot{m}} = M \bullet \bar{x} \bullet \bar{\dot{n}}$$
$$\bar{P} = \bar{f}_n \bullet \bar{T}$$

Examples :

$M_{CO} = 28.0101$ g/mol

$\bar{x}_{CO} = 12.00$ mmol/mol

$\bar{\dot{n}} = 1.530$ mol/s

$C_{mol} = 1000$ mmol/mol

$\bar{f}_n = 3584.5$ rev/min

$\bar{T} = 121.50$ N•m

$C_{rev} = 2 \bullet \pi$ rad/rev

$C_t = 60$ s/min

$C_P = 1000$ (N•m/s)/kW

$$\bar{\dot{m}} = \frac{28.0101 \bullet 12.00 \bullet 1.530}{1000}$$

$\bar{\dot{m}} = 0.514$ g/s

$$\bar{P} = \frac{3584.5 \bullet 121.50 \bullet 2 \bullet \pi}{1000 \bullet 60}$$

$\bar{P} = 45.61$ kW

(e) Ratio of total mass of emissions to total work. To determine brake-specific emissions for a test interval as described in paragraph (a)(3) of this section, calculate a value proportional to the total mass of each emission. Divide each proportional value by a value that is similarly proportional to total work. The result is a brake-specific emission.

(1) Total mass. To determine a value proportional to the total mass of an emission, determine total mass as described in paragraph (b) of this section, except substitute for the flow rate, $\dot{n}$, or the total flow, n with a signal that is linearly proportional to flow rate, $\tilde{\dot{n}}$ or linearly proportional to total flow, $\tilde{n}$.

(2) Total work. To calculate a value proportional to total work over a test interval, integrate a value that is proportional to power. Use information about the brake-specific fuel consumption of your engine, e_{fuel} to convert a signal proportional to fuel flow rate to a signal proportional to power. To determine a signal proportional to fuel flow rate, divide a signal that is proportional to the mass rate of carbon products by the fraction of carbon in your fuel, $w_{c.}$. For your fuel, you may use a measured w_c or you may use the default values in Table 1 of §1065.655. Calculate the mass rate of carbon from the amount of carbon and water in the exhaust, which you determine with a chemical balance of fuel, intake air, and exhaust as described in §1065.655. In the chemical balance, you must use concentrations from the flow that generated the signal proportional to flow rate, $\tilde{\dot{n}}$, in paragraph (e)(1) of this section. The following is an example of how to determine a signal proportional to total work over a test interval:

$$\tilde{W} = \sum_{i=1}^{N} \tilde{P}_i \bullet \Delta t$$

$$\tilde{P}_i = \frac{\tilde{\dot{m}}_{fueli}}{e_{fuel}}$$

$$\tilde{\dot{m}}_{fueli} = \frac{1}{w_{fuel}} \bullet \frac{M_C \bullet \tilde{\dot{n}}_i \bullet x_{Cproddryi}}{1 + x_{H2Oi}}$$

$$\Delta t = \frac{1}{f_{record}}$$

Example:

$N = 3000$

$f_{record} = 5$ Hz

$e_{fuel} = 285$ g/(kW•hr)

$w_{fuel} = 0.869$ g/g

$M_c = 12.0107$ g/mol

$\tilde{\dot{n}}_1 = 3.922$ ~ mol/s

$x_{Cproddry1} = 91.634$ mmol/mol

$x_{H2O1} = 26.16$ mmol/mol

$\tilde{\dot{n}}_2 = 4.139$ ~ mol/s

$x_{Cproddry2} = 98.005$ mmol/mol

$x_{H2O2} = 27.21$ mmol/mol

$C_{mol} = 1000$ mmol/mol

$C_t = 3600$ s/hr

$$\tilde{W} = \frac{12.0107 \bullet \left[\frac{3.922 \bullet \frac{91.634}{1000}}{1 + \frac{26.16}{1000}} + \frac{4.139 \bullet \frac{98.005}{1000}}{1 + \frac{27.21}{1000}} + \ldots + \frac{\tilde{\dot{n}}_{3000} \bullet \frac{x_{Cpdry3000}}{1000}}{1 + \frac{x_{H2On3000}}{1000}} \right] \bullet 0.2}{285 \bullet 0.869}$$

$\tilde{W} = 5.09$ ~ kW•hr

(3) Use the value proportional to total mass and the value proportional to total work to determine brake-specific emissions as described in paragraph (a)(3) of this section.

(f)Rounding. Round emission values only after all calculations are complete and the result is in g/kW·hr or units equivalent to the units of the standard (i.e., g/hp·hr.).

(1) General. To replace a number having a given number of digits with a number having a smaller number of digits, follow these rules:

(i) If the digits to be discarded begin with a digit less than 5, the digit preceding the 5 is not changed. Example : 6.9749515 rounded to 3 digits is 6.97

(ii) If the digits to be discarded begin with a 5 and at least one of the following digits is greater than 0, the digit preceding the 5 is increased by 1. Examples : 6.9749515 rounded to 2 digits is 7.0, 6.9749515 rounded to 5 digits is 6.9750

(iii) If the digits to be discarded begin with a 5 and all of the following digits are 0, the digit preceding the 5 is unchanged if it is even and increased by 1 if it is odd. (Note that this means that the final digit is always even.) Examples : 6.9749515 rounded to 7 digits is 6.974952, 6.974950 5 rounded to 7 digits is 6.974950.

(2) Rounding converted numerical values. In most cases the product of the unconverted numerical value and a conversion factor will be a numerical value with a number of digits that exceeds the number of significant digits of the unconverted numerical value. Proper conversion procedure requires rounding this converted numerical value to the number of significant digits that is consistent with the maximum possible rounding error of the unconverted numerical value. Example : To express the value l = 36 ft in meters, use the factor 0.3048 and write l = 36 ft 3 0.3048 m/ft = 10.9728 m = 11.0 m. The final result, l = 11.0 m, is based on the following reasoning: The numerical value "36" has two significant digits, and thus a relative maximum possible rounding error (abbreviated RE) of 0.5/36 = 1.4 % because it could have resulted from rounding the number 35.5, 36.5, or any number between 35.5 and 36.5. To be consistent with this RE, the converted numerical value "10.9728" is rounded to 11.0 or three significant digits because the number 11.0 has an RE of 0.05/11.0 = 0.45 %. Although this 0.45 % RE is one-third of the 1.4 % RE of the unconverted numerical value "36," if the converted numerical value "10.9728" had been rounded to 11 or two significant digits, information contained in the unconverted numerical value "36" would have been lost. This is because the RE of the numerical value "11" is 0.5/11 = 4.5 %, which is three times the 1.4 % RE of the unconverted numerical value "36." This example therefore shows that when selecting the number of digits to retain in the numerical value of a converted quantity, one must often choose between discarding information or providing unwarranted information. Consideration of the end use of the converted value can often help one decide which choice to make. Note : Consider that one had been told initially that the value l = 36 ft had been rounded to the nearest inch. Then in this case, since l is known to within 1 in, the RE of the numerical value "36" is 1 in/(36 ft 3 12 in/ft) = 0.23 %. Although this is less than the 0.45 % RE of the number 11.0, it is comparable to it. Therefore, the result l = 11.0 m is still given as the converted value. Note that the numerical value "10.97" would give excessive unwarranted information because it has an RE that is one-fifth of 0.23 %.

§1065.655 Chemical balances of fuel, intake air, and exhaust.

(a) General. Chemical balances of fuel, intake air, and exhaust may be used to calculate ratios of their flows, the amount of water in their flows, and the concentration of constituents in their flows. Along with the flow rate of either fuel, intake air, or exhaust you may use chemical balances to determine the flows of the other two. For example, you may use chemical balances along with exhaust flow to determine fuel flow and intake flow.

(b) Procedures that require chemical balances. We require chemical balances when you determine the following:

(1) A value proportional to total work, $\tilde{W}$, when you choose to determine brake-specific emissions as described in §1065.650(e).

(2) The amount of water in a raw or diluted exhaust flow, x_{H2On}, when you do not measure the amount of water in a flow to correct for the amount water removed, as described in §1065.659(c)(2).

(3) The flow-weighted average fraction of dilution air in diluted exhaust, $\overline{DF}$, when you do not measure dilution air flow to correct for background emissions as described in§1065.667(c).

(c) Chemical balance procedure. The calculations for a chemical balance involve a system of equations that require iteration. We recommend using a computer to solve this system of equations. You must guess the initial values of up to three quantities: the amount of water in the measured flow, x_{H2O}, fraction of dilution air in diluted exhaust, DF, and the amount of products on a C_1 basis per dry mole of dry measured flow, $x_{Cproddry}$. For each emissions concentration, x, and amount of water x_{H2O}, you must determine their completely dry concentrations. x_{dry} and x_{H2Odry}. You must also use your fuel's atomic hydrogen to carbon ratio, α, and oxygen to carbon ratio, β. For your fuel, you may measure α and β or you may use the default values in Table 1 of §1065.650. Use the following steps to complete a chemical balance:

(1) Convert your measured concentrations such as, $x_{CO2meas}$, x_{NOmeas}, and x_{H2Oint}, to dry concentrations by dividing them by one minus the amount of water present during their respective measurements: $x_{H2OxCO2}$, x_{H2OxNO}, and x_{H2Oint}. If the amount of water present during a "wet" measurement is the same as the unknown amount of water in the exhaust flow, x_{H2O}, iteratively solve for that value in the system of equations. If you measure only total NO_x and not NO and NO_2 separately, use good engineering judgement to split your total NOx between NO and NO_2 for the chemical balances. For example, if you measure emissions from a stoichiometric spark-ignition engine, you may assume all NO_x is NO. For a compression-ignition engine, you may assume NO_x is 75 % NO and 25 % NO_2. For NO_2 storage aftertreatment systems, you may assume NO_x is 75 % NO_2 and 25 % NO. Note that for emissions calculations you must use the molar mass of NO_2 for the molar mass of all NO_x, regardless of the actual NO_2 fraction of NO_x.

(2) Enter the equations in paragraph (c)(3) of this section into a computer program to iteratively solve for x_{H2O} and $x_{Cproddry}$. If you measure raw exhaust flow, set DF equal to zero (0). If you measure diluted exhaust flow, iteratively solve for DF. Use good engineering judgment to guess initial values for $x_{H2O,}$ $x_{Cproddry,}$ and DF . We recommend guessing an initial amount of water that is about twice the amount of water in your intake or dilution air. We recommend guessing an initial value of $x_{Cproddry}$ as the sum of your measured CO_2, CO, and THC values. If you measure diluted exhaust, we also recommend guessing an initial DF between 0.75 and 0.95, such as 0.8. Perform iteration until the most recently updated guesses are all within ±1 % of their respective most recently calculated values.

(3) In the equations that follow, we use the following symbols and subscripts:

x_{H2O} = amount of water in measured flow

x_{H2Odry} = amount of water per dry mole of measured flow

$x_{Cproddry}$ = amount of carbon products on a C_1 basis per dry mole of measured flow

DF = fraction of dilution air in measured flow--assuming stoichiometric exhaust

$x_{prod/intdry}$ = amount of dry stoichiometric products per dry mole of intake air

$x_{O2proddry}$ = amount of oxygen products on an O_2 basis per dry mole of measured flow

$x_{[emission]dry}$ = amount of emission per dry mole of measured flow

$x_{[emission]meas}$ = amount of emission in measured flow

$x_{H2O[emission]meas}$ = amount of water at emission measurement location

x_{H2Oint} = amount of water in intake air

x_{H2Odil} = amount of water in dilution air

$x_{O2airdry}$ = amount of oxygen per dry mole of air; 0.209445 mol/mol

$x_{CO2airdry}$ = amount of carbon dioxide per dry mole of air; 375 μmol/mol

α=atomic hydrogen to carbon ratio in fuel

β=atomic oxygen to carbon ratio in fuel

$$x_{H2O} = \frac{x_{H2Odry}}{1 + x_{H2Odry}}$$

$$x_{H2Odry} = \frac{\alpha}{2} \bullet x_{Cproddry} + (1 - DF) \bullet \frac{x_{H2Ointdry}}{x_{prod/intdry}} + DF \bullet x_{H2Odildry}$$

$$x_{Cproddry} = x_{CO2dry} + x_{COdry} + x_{THCdry}$$

$$DF = 1 - \frac{x_{O2proddry} \bullet x_{prod/intdry}}{x_{O2airdry}} \bullet \left(1 + x_{H2Ointdry}\right)$$

$$x_{prod/intdry} = \frac{1}{1 - \frac{1}{1 - DF} \bullet \frac{1}{2} \bullet \left(x_{COdry} - \frac{\alpha}{2} \bullet x_{Cproddry} - x_{NO2dry} \right)}$$

$$x_{O2proddry} = x_{CO2dry} + \frac{1}{2} \bullet \left(x_{COdry} + \frac{\alpha}{2} \bullet x_{Cproddry} + x_{NOdry} \right) + x_{NO2dry} - \beta \bullet x_{Cproddry}$$

$$x_{CO2dry} = \frac{x_{CO2meas}}{1 - x_{H2OCO2meas}} - \frac{x_{CO2airdry}}{1 - \frac{1}{2} \bullet \left(x_{COdry} - \frac{\alpha}{2} \bullet x_{Cproddry} - x_{NO2dry} \right)}$$

$$x_{COdry} = \frac{x_{COmeas}}{1 - x_{H2OCOmeas}}$$

$$x_{THCdry} = \frac{x_{THCmeas}}{1 - x_{H2OTHCmeas}}$$

$$x_{H2Ointdry} = \frac{x_{H2Oint}}{1 - x_{H2Oint}}$$

$$x_{H2Odildry} = \frac{x_{H2Odil}}{1 - x_{H2Odil}}$$

$$x_{NO2dry} = \frac{x_{NO2meas}}{1 - x_{H2ONO2meas}}$$

$$x_{NOdry} = \frac{x_{NOmeas}}{1 - x_{H2ONOmeas}}$$

(4) The following is an example; iteratively solved using the equations in paragraph (c)(3) of this section:

$$x_{H2O} = \frac{35.24}{1+\frac{35.24}{1000}} = 34.04 \quad \text{mmol/mol}$$

$$x_{H2Odry} = \frac{1.8}{2}\bullet 24.69 + (1-0.843)\bullet\frac{17.22}{0.9338} + 0.843\bullet 12.01 = 35.24 \quad \text{mmol/mol}$$

$$x_{Cproddry} = 24.614 + \frac{29.3}{1000} + \frac{47.6}{1000} = 24.69 \quad \text{mmol/mol}$$

$$DF = 1 - \frac{\frac{34.54}{1000}\bullet 0.9338}{0.209445}\bullet\left(1+\frac{17.22}{1000}\right) = 0.843$$

$$x_{prod/intdry} = \frac{1}{1-\frac{1}{1-0.843}\bullet\frac{1}{2}\bullet\left(\frac{29.3}{1000000} - \frac{1.8}{2}\bullet\frac{24.69}{1000} - \frac{12.1}{1000000}\right)} = 0.9338 \quad \text{mol/mol}$$

$$x_{O2proddry} = 24.614 + \frac{1}{2}\bullet\left(\frac{29.3}{1000} + \frac{1.8}{2}\bullet 24.69 + \frac{50.4}{1000}\right) + \frac{12.1}{1000} - 0.05\bullet 24.69 = 34.54 \quad \text{mol/mol}$$

$$x_{CO2dry} = \frac{24.770}{1-\frac{8.601}{1000}} - \frac{\frac{375}{1000}}{1-\frac{1}{2}\bullet\left(\frac{29.3}{1000000} - \frac{1.8}{2}\bullet\frac{24.69}{1000} - \frac{12.1}{1000000}\right)} = 24.614 \quad \text{mmol/mol}$$

$$x_{COdry} = \frac{29.0}{1-\frac{8.601}{1000}} = 29.3 \quad \mu\text{mol/mol}$$

$$x_{THCdry} = \frac{46}{1-\frac{34.04}{1000}} = 47.6 \quad \mu\text{mol/mol}$$

$$x_{H2Ointdry} = \frac{16.93}{1-\frac{16.93}{1000}} = 17.22 \quad \text{mmol/mol}$$

$$x_{H2Odildry} = \frac{11.87}{1-\frac{11.87}{1000}} = 12.01 \quad \text{mmol/mol}$$

$$x_{NO2dry} = \frac{12.0}{1-\frac{8.601}{1000}} = 12.1 \quad \mu\text{mol/mol}$$

$$x_{NOdry} = \frac{50.0}{1-\frac{8.601}{1000}} = 50.4 \quad \mu\text{mol/mol}$$

$$x_{O2airdry} = 0.209445 \quad \text{mol/mol}$$

$$x_{CO2airdry} = 375 \quad \mu\text{mol/mol}$$

α=1.8

β=0.05

Table 1 of §1065.655–Default values of atomic hydrogen to carbon ratio, α, atomic oxygen to carbon ratio, β, and carbon mass fraction of fuel, w_C, for various fuels

Fuel	Atomic hydrogen and oxygen to carbon ratios $CH\alpha O\beta$	Carbon mass concentration, w_c g/g
Gasoline	$CH_{1.85}O_0$	0.866
#2 Diesel	$CH_{1.80}O_0$	0.869
#1 Diesel	$CH_{1.93}O_0$	0.861
LPG (C_3H_8)	$CH_{2.67}O_0$	0.817
LNG/CNG	$CH_{3.79}O_{0.02}$	0.707
Ethanol	$CH_3O_{0.5}$	0.521
Methanol	CH_4O_1	0.375

§1065.657 Drift validation and correction.

(a) Determine if measurement instrument drift invalidates a test. Use the following quantities and calculation to determine if drift invalidates a test:

(1) Span reference, x_{ref}.

(2) Post-test span check, $x_{spanchk}$.

(3) Post-test zero check, $x_{zerochk}$.

(4) Flow-weighted amount expected at either the standard or during a test interval, whichever is greater, x_{exp}.

(5) Calculate drift correction, as follows:

$$drift\ correction = \frac{\frac{x_{zerochk} - x_{spanchk}}{x_{ref}} + 1 - \frac{x_{zerochk}}{x_{\exp}}}{2}$$

$$Example:$$

$$x_{spanchk} = 1695.8 \quad \mu\text{mol/mol}$$

$$x_{zerochk} = -5.2 \quad \mu\text{mol/mol}$$

$$x_{ref} = 1800.0 \quad \mu\text{mol/mol}$$

$$x_{exp} = 435.5 \quad \mu\text{mol/mol}$$

$$drift\ correction = \frac{\frac{-5.2-1695.8}{1800.0} + 1 - \frac{-5.2}{435.5}}{2} = 0.033 = 3.3\ \%$$

(b) You may correct every recorded amount for drift if drift did not invalidate the test. Use the following quantities and calculation to correct for drift:

(1) The quantities from paragraph (a) of this section.

(2) Each recorded amount, x_i or for batch sampling, $\overline{x}$.

(3) Correct for drift as follows:

$$x_{i\,drift\,corrected} = \frac{\left(\frac{x_{zerochk} - x_{spanchk}}{x_{ref}} + 3\right) \bullet x_i - x_{zerochk}}{2}$$

$$Example:$$

$$x_{spanchk} = 1695.8 \quad \mu\text{mol/mol}$$
$$x_{zerochk} = -5.2 \quad \mu\text{mol/mol}$$
$$x_{ref} = 1800.0 \quad \mu\text{mol/mol}$$
$$x_i \text{ or } \overline{x} = 435.5 \quad \mu\text{mol/mol}$$

$$x_{i\,drift\,corrected} = \frac{\left(\frac{-5.2-1695.8}{1800.0} + 3\right) \bullet 435.5 - -5.2}{2} = 450.1 \quad \mu\text{mol/mol}$$

§1065.658 Noise correction.

(a) You may set to zero any recorded data point if that point's numerical value is smaller than the least of the following values:

(1) The measurement instrument noise determined according to §1065.305.

(2) For lab instruments the recommended noise limit specified in Table 1 of §1065.205.

(3) For field-testing instruments, the recommended noise limit specified in Table 1 of §1065.915.

(b) If you perform this noise correction on samples that are corrected for background concentrations in dilution air, then noise correct the respective dilution air measurements the same way.

(c) If you perform this noise correction on a THC concentration that you use to determine NMHC, then correct the CH_4 concentration the same way.

§1065.659 Removed water correction.

(a) If you remove water upstream of a concentration measurement, x, or upstream of a flow measurement, n, correct for the removed water. Perform this correction based on the amount of water at the concentration measurement, $x_{H2O[emission]meas}$, and at the flow meter, x_{H2O}, whose flow is used to determine the concentration's total mass over a test interval.

(b) Downstream of where you removed water, you may determine the amount of water remaining by any of the following:

(1) Measure the dewpoint temperature and absolute pressure downstream of the water removal location and then calculate the amount of water remaining as described in §1065.645.

(2) If you can justify assuming saturated water vapor conditions at a given location, you may use the measured temperature at that location as the dewpoint temperature.

(3) You may also use a nominal value of absolute pressure based on an alarm setpoint, a pressure regulator setpoint, or good engineering judgment.

(c) For a corresponding concentration or flow measurement where you did not remove water, you may determine the amount of initial water by any of the following:

(1) Use any of the techniques described in paragraph (b) of this section.

(2) If the measurement is a raw exhaust measurement, you may determine the amount of water based on intake-air humidity, plus a chemical balance of fuel, intake air and exhaust as described in§1065.655.

(3) If the measurement is a diluted exhaust measurement, you may determine the amount of water based on intake-air humidity, dilution air humidity, and a chemical balance of fuel, intake air and exhaust as described in §1065.655.

(d) Perform a removed water correction to the concentration measurement using the following calculation:

$$x = x_{[emission]meas} \bullet \left[\frac{1 - x_{H2O}}{1 - x_{H2O[emission]meas}} \right]$$

Example:

$x_{COmeas} = 29.0 \quad \mu\text{mol/mol}$

$x_{H2OCOmeas} = 8.601 \quad \text{mmol/mol}$

$x_{H2O} = 34.04 \quad \text{mmol/mol}$

$C_{mol} = 1000 \quad \text{mmol/mol}$

$$x_{CO} = 29.0 \bullet \left[\frac{1 - \frac{34.04}{1000}}{1 - \frac{8.601}{1000}} \right]$$

$x_{CO} = 28.3 \quad \mu\text{mol/mol}$

§1065.660 THC and NMHC determination.

(a) THC determination. If we require you to determine THC emission, calculate x_{THC} using the initial THC contamination concentration $x_{THCinit}$ from §1065.520 as follows:

$$x_{THC} = x_{THC} - x_{THCinit}$$

example:

$$x_{THC} = 150.3 \quad \mu\text{mol/mol}$$

$$x_{THCinit} = 1.1 \quad \mu\text{mol/mol}$$

$$x_{THC} = 150.3 - 1.1$$

$$x_{THC} = 149.2 \quad \mu\text{mol/mol}$$

(b) NMHC determination. Use one of the following to determine NMHC emission, ,x_{NMHC}

(1) If you did not measure CH_4, you may report x_{NMHC} as $0.98 \cdot x_{THC}$.

(2) For nonmethane cutters, calculate x_{NMHC} using the nonmethane cutter's penetration fractions (*PF*) of CH_4, and C_2H_6, from§1065.331, and using the initial NMHC contamination concentration $x_{NMHCinit}$ from §1065.520 as follows:

$$x_{NMHC} = \frac{PF_{CH4} \cdot x_{THC} - x_{CH4}}{PF_{CH4} - PF_{C2H6}} - x_{NMHCinit}$$

example:

$x_{THC} = 150.3 \quad \mu\text{mol/mol}$

$x_{CH4} = 20.5 \quad \mu\text{mol/mol}$

$PF_{CH4} = 0.980$

$PF_{C2H6} = 0.050$

$x_{NMHCinit} = 1.1 \quad \mu\text{mol/mol}$

$$x_{NMHC} = \frac{0.980 \cdot 150 - 20}{0.980 - 0.050} - 1.1$$

$x_{NMHC} = 135.2 \quad \mu\text{mol/mol}$

(3) For gas a chromatograph, calculate x_{NMHC} using the THC analyzer's response factor (*RF*) CH_4, from§1065.366, and using the initial NMHC contamination concentration $x_{NMHCinit}$ from §1065.520 as follows:

$$x_{NMHC} = x_{THC} - RF_{CH4} \cdot x_{CH4} - x_{NMHCinit}$$

example:

$x_{THC} = 145.6 \quad \mu mol/mol$

$x_{CH4} = 18.9 \quad \mu mol/mol$

$RF_{CH4} = 0.970$

$x_{NMHCinit} = 1.1 \quad \mu mol/mol$

$$x_{NMHC} = 145.6 - 0.970 \cdot 18.9 - 1.1$$

$$x_{NMHC} = 126.2 \quad \mu mol/mol$$

(4) If the result of paragraph (b)(2) or (3) of this section is greater than the result of paragraph (b)(1) of this section, use the value calculated under paragraph (b)(1) of this section.

§1065.665 THCE and NMHCE determination.

(a) If we require you to determine THCE, consider references to NMHC and NMHCE in this section to mean THC and THCE, respectively. If we require you to determine NMHCE, first determine NMHC as described in §1065.660.

(b) If you measured an oxygenated hydrocarbon's mass concentration (per mole of exhaust), then first calculate its molar concentration by dividing its mass concentration by the molar mass of the oxygenated hydrocarbon.

(c) Then multiply each oxygenated hydrocarbon's molar concentration by its respective number of carbon atoms per molecule. Add these carbon-equivalent molar concentrations to the molar concentration of NMHC. The result is the molar concentration of NMHCE.

(d) For example, if you measured ethanol (C_2H_5OH) and methanol (CH_3OH) as molar concentrations, and acetaldehyde (C_2H_4O) and formaldehyde (HCHO) as mass concentrations, you would determine NMHCE emissions as follows:

$$x_{NMHCE} = x_{NMHC} + \sum_{i=1}^{N} x_{OHC_i}$$

$$x_{OHC_i} = \frac{M_{exhOHC_i}}{M_{OHC_i}}$$

example:

$x_{NMHC} = 127.3 \quad \mu\text{mol/mol}$

$x_{C2H5OH} = 100.8 \quad \mu\text{mol/mol}$

$x_{CH3OH} = 25.5 \quad \mu\text{mol/mol}$

$M_{exhC2H4O} = 0.841 \quad \text{mg/mol}$

$M_{exhHCHO} = 39.0 \quad \mu\text{g/mol}$

$M_{C2H4O} = 44.05256 \quad \text{g/mol}$

$M_{HCHO} = 30.02598 \quad \text{g/mol}$

$$x_{C2H4O} = \frac{0.841}{44.05256} \times 1000 = 19.1 \quad \mu\text{mol/mol}$$

$$x_{HCHO} = \frac{39}{30.02598} = 1.3 \quad \mu\text{mol/mol}$$

$$x_{NMHCE} = \quad 127.3 + 2 \times 100.8 + 25.5 + 2 \times 19.1 + 1.3 = 393.9 \quad \mu\text{mol/mol}$$

§1065.667 Dilution air background emission correction.

(a) General. To determine the mass of background emissions to subtract from a diluted exhaust sample, first determine the total flow of dilution air, n_{dil}, over the test interval. This may be a measured quantity or a quantity calculated from the diluted exhaust flow and the flow-weighted average fraction of dilution air in diluted exhaust, $\overline{DF}$. Multiply the total flow of dilution air by the mean concentration of a background emission, $\overline{x}_{dil}$. This may a time-weighted mean or a flow-weighted mean (e.g. a proportionally sampled background). The product of n_{dil} and $\overline{x}_{dil}$ is the total amount of a background emission. If this is a molar quantity, convert it to a mass by multiplying it by its molar mass, M. The result is the mass of the background emission, m. In the case of PM, where the mean PM concentration is already in units of mass per mole of sample, $\overline{M}_{PM}$, simply multiply the total amount of

dilution air by $\overline{M}_{PM}$. The result is the total background mass of PM, m_{PM} . Subtract the total background mass from the total mass to correct for background emissions.

(b) You may determine the total flow of dilution air by a direct flow measurement. In this case calculate the total mass of background as described in §1065.650(b), using the dilution air flow, n_{dil} . Subtract the background mass from the total mass. Use the result in brake-specific emissions calculations.

(c) You may determine the total flow of dilution air from the total flow of diluted exhaust and a chemical balance of the fuel, intake air and exhaust as described in §1065.655. In this case calculate the total mass of background as described in §1065.650(b), using the total flow of diluted exhaust, n_{dexh}. Then multiply this result by the flow-weighted average fraction of dilution air in diluted exhaust, $\overline{DF}$. Calculate $\overline{DF}$ using flow-weighted average concentrations of emissions in the chemical balance, as described in §1065.655. You may assume that your engine operates stoichiometrically, even if it is a lean-burn engine, such as a compression-ignition engine. Note that for lean-burn engines this assumption could result in an error in emissions calculations. This error could occur because the chemical balances in §1065.655 correct excess air passing through a lean-burn engine as if it was dilution air. If an emission concentration expected at the standard is about 100 times its dilution air background concentration, this error is negligible. However, if an emission concentration expected at the standard is similar to its background concentration, this error could be significant. If you are concerned about this error, we recommend that you remove background emissions from dilution air by HEPA filtration, chemical adsorption, or catalytic scrubbing. You might also consider using a partial-flow dilution technique such as a bag mini-diluter, which uses purified air as the dilution air.

(d) The following is an example of using the flow-weighted average fraction of dilution air in diluted exhaust, $\overline{DF}$. and the total mass of background emissions calculated using the total flow of diluted exhaust, n_{dexh}, as described in §1065.650(b) :

$$m_{bkgnd} = \overline{DF} \bullet m_{bkgnddexh}$$

$$m_{bkgnddexh} = M \bullet \overline{x}_{bkgnd} \bullet n_{dexh}$$

$$Example:$$

$$M_{NOx} = 46.0055 \quad \text{g/mol}$$

$$\overline{x}_{bkgnd} = 0.05 \quad \mu\text{mol/mol}$$

$$n_{dexh} = 23280.5 \quad \text{mol}$$

$$\overline{DF} = 0.843$$

$$C_{mol} = 1000000 \quad \mu\text{mol/mol}$$

$$m_{bkgndNOxdexh} = 46.0055 \bullet \frac{0.05}{1000000} \bullet 23280.5$$

$$m_{bkgndNOxdexh} = 0.0536 \quad \text{g}$$

$$m_{bkgndNOx} = 0.843 \bullet 0.0536$$

$$m_{bkgndNOx} = 0.0452 \quad \text{g}$$

§1065.670 NO_x intake-air humidity correction.

(a) Correct NO_x concentrations for intake-air humidity after applying all other corrections.

(b) For compression-ignition engines correct for intake-air humidity as follows or develop your own correction, based on good engineering judgment:

$$x_{NOxcorr} = x_{NOxuncorr} \bullet \left(9.953 \bullet x_{H2O} + 0.832\right)$$

$$Example:$$

$$x_{NOxuncorr} = 700.5 \quad \mu\text{mol/mol}$$

$$x_{H2O} = 0.022 \quad \text{mol/mol}$$

$$x_{NOxcorr} = 700.5 \bullet \left(9.953 \bullet 0.022 + 0.832\right)$$

$$x_{NOxcorr} = 736.2 \quad \mu\text{mol/mol}$$

(c) For spark-ignition engines you may use the same correction as for compression-ignition engines, or you may develop your own correction, based on good engineering judgment.

§1065.672 CLD quench check calculations.

(a) Perform CLD quench check calculations as follows:

(1) Calculate the amount of water in the span gas, $x_{H2Ospan}$ assuming complete saturation at the span gas temperature.

(2) Estimate the expected amount of water, x_{H2Oexp} in the exhaust you sample by considering the maximum expected amounts of water in combustion air, in fuel combustion products, and in dilution air if you dilute.

(3) Calculate water quench as follows:

$$quench = \left(\frac{x_{NOwet}}{x_{NOdry}} \bullet \left(1 + x_{H2Ocalc}\right) - 1 \right) \bullet \frac{x_{H2Oexp}}{x_{H2Ocalc}} + \frac{x_{NO,CO2} - x_{NO,N2}}{x_{NO,N2}} \bullet \frac{x_{CO2exp}}{x_{CO2meas}}$$

Example:

$x_{NOdry} = 1800 \quad \mu\text{mol/mol}$

$x_{NOwet} = 1760 \quad \mu\text{mol/mol}$

$x_{H2Oexp} = 0.03 \quad \text{mol/mol}$

$x_{H2Ocalc} = 0.017 \quad \text{mol/mol}$

$x_{NO,CO2} = 1480 \quad \mu\text{mol/mol}$

$x_{NO,N2} = 1500 \quad \mu\text{mol/mol}$

$x_{CO2exp} = 2.0 \quad \%$

$x_{CO2meas} = 3.0 \quad \%$

$$quench = \left(\frac{1760}{1800} \bullet \left(1 + 0.017\right) - 1 \right) \bullet \frac{0.03}{0.017} + \frac{1480 - 1500}{1500} \bullet \frac{2.0}{3.0}$$

$$quench = -0.0099 - 0.0089 = -1.88 \quad \%$$

§1065.690 PM sample media buoyancy correction.

(a) General. Correct PM sample media for their buoyancy in air if you weigh them on a balance. The buoyancy correction depends on the sample media density, the density of air, and the density of the calibration weight used to calibrate the balance. The buoyancy correction does not account for the buoyancy of the PM itself because the mass of PM typically accounts only for (0.01 to 0.10) % of the total weight. A correction to this small fraction of mass would be at the most (0.001 to 0.010) %.

(b) PM sample media density. Different PM sample media have different densities. Use the known density of your sample media, or use one of the densities for some common sampling media:

(1)For PTFE coated borosilicate glass, use a sample media density: 2300 kg/m3.

(2)For PTFE membrane (film) media with an integral support ring of polymethylpentene that accounts for 95 % of the media mass, use a sample media density: 920 kg/m3.

(c) Air density. Because a PM balance environment must be tightly controlled to an ambient temperature of (22 ±1) °C and a dewpoint of (9.5 ±1) °C, air density is only a function of barometric pressure for this correction.

(d) Calibration weight density. Use the stated density of the material of your metal calibration weight. The example calculation in this section uses a density of 8000 kg/m3, but you should know the density of your weight from the calibration weight supplier or the balance manufacturer if it is an internal weight.

(e) Correction calculation. Buoyancy correct PM sample media using the following:

$$m_{corr} = m_{uncorr} \bullet \left[\frac{1 - \dfrac{\rho_{air}}{\rho_{weight}}}{1 - \dfrac{\rho_{air}}{\rho_{media}}} \right]$$

$$\rho_{air} = \left(\frac{M_{air}}{R \bullet T_{amb}} \right) \bullet p_{barom} - \left(\frac{p_{H2O}}{R \bullet T_{amb}} \right) \bullet \left(M_{air} - M_{H2O} \right)$$

$$@T_{amb} = 22\ ^{\circ}C, T_{dew} = 9.5\ ^{\circ}C, p_{barom} / kPa$$

$$\rho_{air} = \left(1.1803 \bullet 10^{-2} \bullet p_{barom} \right) - 5.2922 \bullet 10^{-3}$$

$$Example:$$

$$m_{uncorr} = 100.0000 \quad \text{mg}$$

$$p_{barom} = 101.325 \quad \text{kPa}$$

$$\rho_{weight} = 8000 \quad \text{kg/m}^3$$

$$\rho_{media} = 920 \quad \text{kg/m}^3$$

$$\rho_{air} = \left(1.1803 \bullet 10^{-2} \bullet 101.325 \right) - 5.2922 \bullet 10^{-3}$$

$$\rho_{air} = 1.1906 \quad \text{kg/m}^3$$

$$m_{corr} = 100.0000 \bullet \left[\frac{1 - \dfrac{1.1906}{8000}}{1 - \dfrac{1.1906}{920}} \right]$$

$$m_{corr} = 100.1147 \quad \text{mg}$$

§1065.695 Data requirements.

(a) To determine the information we require from engine tests, refer to the standard-setting part and request from your Designated Compliance Officer the application format for certification. We may require different information for different purposes such as for certification applications, alternate procedure approval requests, selective enforcement audits, laboratory audits, production-line test reports, and field-test reports.

(b) See the standard-setting part and §1065.25 regarding recordkeeping.

(c) We may ask you the following about your testing:

(1) What approved alternative procedures did you use? For example:

(i) Partial-flow dilution for proportional PM.

(ii) CARB test procedures.

(iii) ISO test procedures.

(2) What laboratory equipment did you use? For example, the make, model, and description of the following:

(i) Engine dynamometer and operator demand.

(ii) Probes, dilution, transfer lines, and sample preconditioning components.

(iii) Batch storage media (e.g., bag material, PM filter material).

(3) What measurement instruments did you use? For example, the make, model, and description of the following:

(i) Speed, torque instruments.

(ii) Flow meters.

(iii) Gas analyzers.

(iv) PM balance.

(4) When did you conduct calibrations and performance checks and what were the results? For example, the dates and results of the following:

(i) Linearity checks.

(ii) Interference checks.

(iii) Response checks.

(iv) Leak checks.

(v) Flow meter checks.

(5) What engine did you test? For example, the following:

(i) Manufacturer.

(ii) Family name on engine label.

(iii) Model.

(iv) Model year.

(v) Identification number.

(6) How did you prepare and configure your engine for testing? For example, the following:

(i) Service accumulation; dates, hours, duty cycle and fuel.

(ii) Scheduled maintenance; dates and description.

(iii) Unscheduled maintenance; dates and description.

(iv) Intake restriction allowable pressure range.

(v) Charge air cooler volume.

(vi) Charge air cooler outlet temperature, specified engine conditions and location of temperature measurement.

(vi) Exhaust restriction allowable pressure range.

(vii) Fuel temperature and location of measurement.

(viii) Any aftertreatment system configuration and description.

(ix) Any crankcase ventilation configuration and description (e.g., open, closed, PCV, crankcase scavenged).

(7) How did you test your engine? For example:

(i) Constant speed or variable speed.

(ii) Mapping procedure: step or sweep.

(ii) Continuous or batch sampling for each emission.

(iii) Raw or dilute; any dilution air background sampling.

(vi) Duty cycle and test intervals.

(vii) Cold-start, hot-start, warmed-up running.

(viii) Intake and dilution air absolute pressure, temperature, dewpoint.

(ix) Simulated engine loads, curb idle transmission torque value.

(x) Warm idle speed value, any enhanced idle speed value.

(x) Simulated vehicle signals applied during testing.

(xi) Bypassed governor controls during testing.

(xi) Date, time, and location of test (e.g., dynamometer laboratory identification).

(xi) Cooling medium for engine and charge air.

(xii) Operating temperatures: coolant, head, block.

(xiii) Full names of engine operators and laboratory operators.

(xiv) Natural or forced cool-down and cool-down time.

(xv) Cannister loading.

(8) How did you validate your testing? For example, results from the following:

(i) Duty cycle regression statistics for each test interval.

(ii) Proportional sampling.

(iii) Drift.

(iv) Reference PM sample media in PM-stabilization environment.

(9) How did you calculate results? For example, results from the following:

(i) Drift correction.

(ii) Noise correction.

(iii) “Dry-to-wet” correction.

(iv) NMHC CH_4 and contamination correction.

(v) NO_x humidity correction.

(ii) Brake-specific emission formulation: total mass divided by total work, mass rate divided by power, or ratio of mass to work.

(iii) Rounding emission results.

(10) What were the results of your testing? For example:

(i) Maximum mapped power and speed at maximum power.

(ii) Maximum mapped torque and speed at maximum torque.

(iii) For constant-speed engines: no-load governed speed.

(iii) For constant-speed engines: test torque.

(iv) For variable-speed engines: test speed.

(v) Speed versus torque map.

(vi) Speed versus power map.

(vi) Duty cycle and test interval brake-specific emissions.

(vii) Brake-specific fuel consumption.

(11) What fuel did you use? For example:

(i) Fuel that met specifications of subpart H of this part.

(ii) Alternative fuel.

(iii) Oxygenated fuel.

(12) How did you field test your engine? For example:

(i) Data from paragraphs (c)(1), (3), (4), (5), and (9) of this section.

(ii) Probes, dilution, transfer lines, and sample preconditioning components.

(iii) Batch storage media (e.g., bag material, PM filter material).

(iv) Continuous or batch sampling for each emission.

(v) Raw or dilute; any dilution air background sampling.

(vi) Cold-start, hot-start, warmed-up running.

(vii) Intake and dilution air absolute pressure, temperature, dewpoint.

(viii) Curb idle transmission torque value.

(ix) Warm idle speed value, any enhanced idle speed value.

(x) Date, time, and location of test (e.g., dynamometer laboratory identification).

(xi) Proportional sampling validation.

(xii) Drift validation.

(xiii) Operating temperatures: coolant, head, block.

(xiv) Full name of vehicle operator.

(xv) Full names of field test operators.

(xvi) Vehicle make, model, model year, identification number.

Subpart H— Engine Fluids, Test Fuels, and Analytical Gases

§1065.701 General requirements for test fuels.

(a) For all emission tests, use test fuels meeting the specifications in this subpart unless the standard-setting part directs otherwise. If we do not specify a service-accumulation fuel for a test engine, use a fuel typical of what you would expect the engine to use in service.

(b) If you produce engines that can run on a type of fuel (or mixture of fuels) that we do not specify in this subpart, you must get our approval to test with fuel representing commercially available fuels of that type. We must approve your fuel specifications before you start testing.

(c) You may use a test fuel other than those we specify in this subpart if you do all the following:

(1) Show that it is commercially available.

(2) Show that your engines will use only the designated fuel in service.

(3) Show that operating the engines on the fuel we specify would increase emissions or decrease durability.

(4) Get our written approval before you start testing.

(d) We may allow you to use a different test fuel (such as California Phase 2 gasoline) if you show us that using it does not affect your ability to comply with all applicable emission standards.

§1065.703 Distillate diesel fuel.

(a) Distillate diesel fuels for testing must be clean and bright, with pour and cloud points adequate for proper engine operation.

(b) There are three grades of #2 diesel fuel specified for use as a test fuel. See the standard-setting part to determine which grade to use. If the standard-setting part does not specify which grade to use, use good engineering judgment to select the grade that represents the fuel on which the engines will operate in use. The three grades are specified in Table 1 of this section.

(c) You may use the following nonmetallic additives with distillate diesel fuels:

(1) Cetane improver.

(2) Metal deactivator.

(3) Antioxidant, dehazer.

(4) Rust inhibitor.

(5) Pour depressant.

(6) Dye.

(7) Dispersant.

(8) Biocide.

Table 1 of §1065.703–Test fuel specifications for distillate diesel fuel

Item	Units	Ultra Low Sulfur	Low Sulfur	High Sulfur	Reference Procedure [1]
Cetane Number	—	40 - 50	40 - 50	40 - 50	ASTM D 613-03b
Distillation range: Initial boiling point 10 pct. point 50 pct. point 90 pct. point Endpoint	°C	 171 - 204 204 - 238 243 - 282 293 - 332 321 - 366	 171 - 204 204 - 238 243 - 282 293 - 332 321 - 366	 171 - 204 204 - 238 243 - 282 293 - 332 321 - 366	ASTM D 86-03
Gravity	°API	32 - 37	32 - 37	32 - 37	ASTM D 287-92
Total sulfur	mg/kg	7 - 15	300 - 500	2000 - 4000	ASTM D 2622-03
Aromatics, minimum. (Remainder shall be paraffins, naphthalenes, and olefins)	g/kg	100	100	100	ASTM D 5186-03
Flashpoint, min.	°C	54	54	54	ASTM D 93-02a
Viscosity	cSt	2.0 - 3.2	2.0 - 3.2	2.0 - 3.2	ASTM D 445-03

[1]All ASTM standards are incorporated by reference in §1065.1010.

§1065.705 Residual fuel. [Reserved]

§1065.710 Gasoline.

(a) Gasoline for testing must have octane values that represent commercially available fuels for the appropriate application.

(b) There are two grades of gasoline specified for use as a test fuel. If the standard-setting part requires testing with fuel appropriate for low temperatures, use the test fuel specified for low-temperature testing. Otherwise, use the test fuel specified for general testing. The two grades are specified in Table 1 of this section.

Table 1 of §1065.710–Test fuel specifications for gasoline

Item	Units	General Testing	Low-Temperaturee Testing	Reference Procedure[1]
Distillation Range: Initial boiling point 10% point 50% point 90% point End point	°C	 24 - 35 [2] 49 - 57 93 - 110 149 - 163 Maximum, 213	 24 - 36 37 - 48 82 - 101 158 - 174 Maximum, 212	ASTM D 86-01
Hydrocarbon composition: 1. Olefins 2. Aromatics 3. Saturates	$\mu m^3/m^3$	 Maximum, 100,000 Maximum, 350,000 Remainder	 Maximum, 175,000 Maximum, 304,000 Remainder	ASTM D 1319-02
Lead (organic)	g/liter	Maximum, 0.013	Maximum, 0.013	ASTM D 3237-97
Phosphorous	g/liter	Maximum, 0.0013	Maximum, 0.005	ASTM D 3231-02
Total sulfur	mg/kg	Maximum, 80	Maximum, 80	ASTM D 1266-98
Volatility (Reid Vapor Pressure)	kPa	60.0 - 63.4 [2,3]	77.2 - 81.4	ASTM D 323-99a

[1] All ASTM standards are incorporated by reference in §1065.1010.

[2] For testing at altitudes above 1 219 m, the specified volatility range is (52 to 55) kPa and the specified initial boiling point range is (23.9 to 40.6) °C.

[3] For testing unrelated to evaporative emissions, the specified range is (55 to 63) kPa.

§1065.715 Natural gas.

(a) Natural gas for testing must meet the specifications in the following table:

Table 1 of §1065.715–Test fuel specifications for natural gas

Item	Reference Procedure[1]	Value
1. Methane, CH_4	ASTM D 1945-96	Minimum, 87.0 µmol/mol
2. Ethane, C_2H_6	ASTM D 1945-96	Maximum, 5.5 µmol/mol
3. Propane, C_3H_8	ASTM D 1945-96	Maximum, 1.2 µmol/mol
4. Butane, C_4H_{10}	ASTM D 1945-96	Maximum, 0.35 µmol/mol
5. Pentane, C_5H_{12}	ASTM D 1945-96	Maximum, 0.13 µmol/mol
6. C_6 and higher	ASTM D 1945-96	Maximum, 0.1 µmol/mol
7. Oxygen	ASTM D 1945-96	Maximum, 1.0 µmol/mol
8. Inert gases (sum of CO_2 and N_2)	ASTM D 1945-96	Maximum, 5.1 µmol/mol

[1] All ASTM standards are incorporated by reference in §1065.1010.

(b) At ambient conditions, natural gas must have a distinctive odor detectable down to a concentration in air not more than one-fifth the lower flammability limit.

§1065.720 Liquefied petroleum gas.

(a) Liquefied petroleum gas for testing must meet the specifications in the following table:

Table 1 of §1065.720–Test fuel specifications for liquefied petroleum gas

Item	Reference Procedure[1]	Value
1. Propane, C_3H_8	ASTM D 2163-91	Minimum, 850,000 $\mu m^3/m^3$
2. Vapor pressure at 38 °C	ASTM D 1267-02 or 2598-02[2]	Maximum, 1400 kPa
3. Volatility residue (evaporated temperature, 35 °C)	ASTM D 1837-02	Maximum, -38 °C
4. Butanes	ASTM D 2163-91	Maximum, 50,000 $\mu m^3/m^3$
5. Butenes	ASTM D 2163-91	Maximum, 20,000 $\mu m^3/m^3$
6. Pentenes and heavier	ASTM D 2163-91	Maximum, 5,000 $\mu m^3/m^3$
7. Propene	ASTM D 2163-91	Maximum, 100,000 $\mu m^3/m^3$
8. Residual matter (residue on evap. of 100) ml oil stain observ.)	ASTM D 2158-02	Maximum, 0.05 ml pass [3]
9. Corrosion, copper strip	ASTM D 1838-91	Maximum, No. 1
10. Sulfur	ASTM D 2784-98	Maximum, 80 mg/kg
11. Moisture content	ASTM D 2713-91	pass

[1] All ASTM standards are incorporated by reference in §1065.1010.

[2] If these two test methods yield different results, use the results from ASTM D 1267-02.

[3] The test fuel must not yield a persistent oil ring when you add 0.3 ml of solvent residue mixture to a filter paper in 0.1 ml increments and examine it in daylight after two minutes.

(b) At ambient conditions, liquefied petroleum gas must have a distinctive odor detectable down to a concentration in air not more than one-fifth the lower flammability limit.

§1065.740 Lubricants.

(a) Use commercially available lubricating oil that represents the oil that will be used in your engine in use.

(b) You may use lubrication additives, up to the levels that the additive manufacturer recommends.

§1065.745 Coolants.

(a) You may use commercially available antifreeze mixtures or other coolants that will be used in your engine in use.

(b) For laboratory testing of liquid-cooled engines, you may use water with or without rust inhibitors.

(c) For coolants allowed in paragraphs (a) and (b) of this section, you may use rust inhibitors and additives required for lubricity, up to the levels that the additive manufacturer recommends.

§1065.750 Analytical Gases.

Analytical gases must meet the accuracy and purity specifications of this section, unless you can show that other specifications would not affect your ability to show that your engines comply with all applicable emission standards.

(a) Subparts C and D of this part refer to the following gas specifications:

(1) Use purified gases to zero measurement instruments and to blend with calibration gases. Use gases with contamination up to the highest of the following values in the gas cylinder or at the outlet of a zero-gas generator:

(i) 2 % contamination, measured relative to the flow-weighted average concentration expected at the standard.

(ii) 2 % contamination, measured relative to the flow-weighted average concentration measured during testing.

(iii) Contamination as specified in the following table:

Table 1 of §1065.750–General specifications for purified gases

Constituent	Purified Air[1]	Purified N_2 [1]
THC (C_1 equivalent)	< 0.05 µmol/mol	< 0.05 µmol/mol
CO	< 1 µmol/mol	< 1 µmol/mol
CO_2	< 10 µmol/mol	< 10 µmol/mol
O_2	0.205 to 0.215 mol/mol	< 2 µmol/mol
NO_x	< 0.02 µmol/mol	< 0.02 µmol/mol

[1] We do not require that these levels of purity be traceable to NIST standards.

(2) Use the following gases with a flame-ionization detector (FID) analyzer:

(i) Use FID fuel with an H_2 concentration of (0.4 ±0.02) mol/mol, balance He. Make sure the mixture contains no more than 0.05 µmol/mol THC.

(ii) Use FID burner air that meets the specifications of purified air in paragraph (a)(1) of this section.

(iii) Zero flame-ionization detectors with purified air meeting the specifications in paragraph (a)(1) of this section.

(3) Use the following gas mixtures, with gases traceable within ±1 % of the NIST true value or other gas standards we approve:

(i) CH_4, balance purified synthetic air or N_2.

(ii) C_2H_6, balance purified synthetic air or N_2.

(iii) C_3H_8, balance purified synthetic air or N_2.

(iv) CO, balance purified N_2.

(v) CO_2, balance purified N_2.

(vi) NO, balance purified N_2.

(vii)) NO_2, balance purified N_2.

(viii) O_2, balance purified N_2.

(ix) C_3H_8, CO, CO_2, NO, balance purified N_2.

(4) You may use gases for species other than those listed in paragraph (b)(3) of this section (such as methanol in air, which you may use to determine response factors), as long as they are traceable to ±1 % of the NIST true value or other similar standards we approve.

(5) You may generate your own calibration gases using a precision blending device, such as a gas divider, to dilute gases with purified N_2 or purified synthetic air. Gas dividers must meet the specifications in §1065.248.

(b) Record the concentration of any calibration gas standard and its expiration date specified by the gas supplier. Do not use any calibration gas standard after its expiration date.

(c) Transfer gases from their source to analyzers using components that are dedicated to controlling and transferring only those gases. For example, do not use a regulator, valve, or transfer line for zero gas if those components were previously used to transfer a different gas mixture. We recommend that you label regulators, valves, and transfer lines to prevent contamination. Note that even small traces of a gas mixture in the dead volume of a regulator, valve, or transfer line can diffuse upstream into a high-pressure volume of gas, which would contaminate the entire high-pressure gas source, such as a compressed-gas cylinder.

§1065.790 Mass standards.

(a) PM balance calibration weights. Use PM balance calibration weights that are certified as traceable to NIST standards to within 0.1 % uncertainty. Calibration weights may be certified by any calibration lab that maintains NIST traceability. Make sure your lowest calibration weight has no greater than ten times the mass of an unused PM-sample medium.

(b) Dynamometer calibration weights. [Reserved]

Subpart I— Testing with Oxygenated Fuels

§1065.801 Applicability.

(a) This subpart applies for testing with oxygenated fuels. Unless the standard-setting part specifies otherwise, the requirements of this subpart do not apply for fuels that contain less than 25 % oxygenated compounds by volume. For example, you generally do not need to follow the requirements of this subpart for tests performed using a fuel containing 10 % ethanol and 90 % gasoline, but you must follow these requirements for tests performed using a fuel containing 85 % ethanol and 15 % gasoline.

(b) This subpart specifies sampling procedures and calculations that are different than those used for non-oxygenated fuels. All other test procedures of this part 1065 apply for testing with oxygenated fuels.

§1065.805 Sampling system.

(a) Proportionally dilute engine exhaust, and use batch sampling collect flow-weighted dilute samples at a constant flow rate.

(b) You may collect background samples for correcting dilution air for background concentrations.

(c) Maintain sample temperatures within probes and sample lines that prevent aqueous condensation up to the point where a sample is collected.

(d) You may bubble a sample of the exhaust through water to collect alcohols for later analysis.

(e) For alcohol-containing oxygenated fuels, sample the exhaust through cartridges impregnated with 2,4-dinitrophenylhydrazine to collect carbonyls for later analysis. If the standard-setting part specifies a duty cycle that has multiple test intervals (such as multiple engine starts or an engine-off soak phase), you may proportionally collect a single carbonyl sample for the entire duty cycle.

(f) You may use a photo-acoustic analyzer to quantify ethanol and methanol in an exhaust sample.

(g) Use good engineering judgment to sample other oxygenated hydrocarbon compounds in the exhaust.

§1065.810 Calculations.

Use the calculations specified in §1065.665 to determine THCE or NMHCE.

Subpart J— Field Testing

§1065.901 Applicability.

(a) The test procedures in this subpart measure brake-specific emissions from engines while they are installed in vehicles in the field.

(b) These test procedures apply to your engines only as specified in the standard-setting part.

§1065.905 General provisions.

(a) Unless the standard-setting part specifies deviations from the provisions of this subpart, field testing must conform to all of the provisions of this subpart.

(b) Testing conducted under this subpart may include any normal in-use operation of an engine.

(c) This part specifies procedures for field testing various categories of engines. See the standard-setting part for directions in applying specific provisions in this part for a particular type of engine. Before using this subpart's procedures, read the standard-setting part to answer at least the following questions:

(1) How many engines must I test?

(2) How many times must I repeat a field test on an individual engine?

(3) How do I select vehicles for field testing?

(4) What maintenance steps may I take before or between tests?

(5) What data are needed for a single field test on an individual engine?

(6) What are the limits on ambient conditions for field testing?

(7) Which exhaust constituents do I need to measure?

(8) How do I account for crankcase emissions?

(9) Which engine and ambient parameters do I need to measure?

(10) How do I process the data recorded during field testing to determine if my engine meets field-testing standards? How are individual test intervals determined? Note that "test interval" is defined in subpart K of this part (Part 1065).

(11) Should I warm up the test engine before measuring emissions, or do I need to measure cold-start emissions during a warm-up segment of in-use operation?

(12) Do any unique specifications apply for test fuels?

(13) Do any special conditions invalidate a field test?

(14) Does any special margin apply to field-test emission results based on the accuracy and repeatability of field-testing measurement instruments?

(15) Do results of initial field testing trigger any requirement for additional field testing?

(16) How do I report field-testing results?

(d) Use the following specifications in other subparts of this part (Part 1065) for field testing:

(1) Use the applicability and general provisions of subpart A of this part.

(2) Use equipment specifications in §1065.101 and in §1065.140 through §1065.190. Section 1065.910 specifies additional equipment specific to field testing.

(3) Use measurement instruments in subpart C of this part, except as specified in §1065.915.

(4) Use calibrations and performance checks in subpart D of this part, except as specified in §1065.920. Section 1065.920 also specifies additional calibration and performance checks for field testing.

(5) Use the provisions of the standard-setting part for selecting and maintaining engines instead of the specifications in subpart E of this part.

(6) Use the procedures in §§1065.930 and 1065.935 to start and run a field test. If you use a gravimetric balance for PM, weigh PM samples according to §§1065.590 and 1065.595.

(7) Use the calculations in subpart G of this part to calculate emissions over each test interval. Note that "test interval" is defined in subpart K of this part (Part 1065), and that the standard setting parts indicate how to determine test intervals for your engine. Section 1065.940 specifies additional calculations for field testing. Use any calculations specified in the standard-setting part to determine if your engines meet the field-testing standards. The standard-setting part may also contain additional calculations that determine when further field testing is required.

(8) Use a fuel typical of what you would expect the engine to use in service. You need not use the fuel specified in subpart H of this part.

(9) Use the lubricant and coolant specifications in §1065.740 and §1065.745.

(10) Use the analytical gases and other calibration standards in §1065.750 and §1065.790.

(11) Use the procedures specified for testing with oxygenated fuels in subpart I of this part.

(12) Apply the definitions and reference materials in subpart K of this part.

(e) The following table summarizes the requirements of paragraph (d) of this section:

Table 1 of §1065.905–Summary of field-testing requirements that are specified outside of this subpart J [1]

Subpart…	Use for field testing…
A: Applicability and general provisions	Use all.
B: Equipment for testing	Use §1065.101and §1065.140 through end of subpart B. §1065.910 specifies equipment specific to field testing.
C: Measurement instruments	Use all. §1065.915 allows deviations.
D: Calibrations and performance checks	Use all. §1065.920 allows deviations, but also has additional
E: Test engine selection, maintenance, and durability	Do not use. Use standard-setting part.
F: Running an emission test in the laboratory	Use §§1065.590 and 1065.595for weighing PM with a gravimetric balance. §1065.930 and §1065.935 to start and run a field test.
G: Calculations	Use all. Use standard-setting part.
H: Fuels, engine fluids, analytical gases, and other calibration materials	Use an in-use fuel. You do not have to use fuels in subpart H.
I: Testing with oxygenated fuels	Use all.
K: Definitions and reference materials	Use all.

[1] Refer to §1065.905 (d) for complete specifications.

§1065.910 Field-testing equipment.

(a) Use field-testing equipment that meets the specifications of §1065.101 and §1065.140 through §1065.190.

(b) This section describes additional equipment that is specific to field testing.

(c) To field test an engine, you will likely route its exhaust to a raw exhaust flow meter and to sample probes. Route exhaust, as follows:

(1) Use short flexible connectors at the end of the engine's exhaust pipe.

(i) You may use flexible connectors to enlarge or reduce the exhaust-pipe diameter to match that of your test equipment.

(ii) Use flexible connectors that do not exceed a length of three times their largest inside diameter.

(iii) Use at least 315 °C temperature rated, four-ply silicone fiberglass fabric material for flexible connectors. You may use connectors with a spring steel wire helix for support and/or Nomex™ coverings or linings for durability. You may also use any other material that performs equivalently in terms of permeability, and durability as long as it seals tightly around tailpipes and does not react with exhaust.

(iv) Use stainless steel hose clamps to seal flexible connectors to the outside diameter of tailpipes or use clamps that seal equivalently.

(v) You may use additional flexible connectors to connect to flow meters and sample probe locations.

(2) Use rigid 300 series stainless steel tubing to connect between flexible connectors. Tubing may be straight or bent to accommodate vehicle geometry. You may use 300 series stainless steel tubing "T" or "Y" fittings to join exhaust from multiple tailpipes. Alternatively, you may cap or plug redundant tailpipes if it is recommended by the engine manufacturer.

(3) Use connectors and tubing that do not increase back pressure so much that it exceeds the manufacturer's maximum specified exhaust restriction. You may verify this at the maximum exhaust flow rate by measuring back pressure at the vehicle tailpipe with your system connected. Alternatively, you may verify this by engineering analysis, taking into account the maximum exhaust flow rate expected and the flexible connectors and tubing pressure drops versus flow characteristics.

(d) Use mounting hardware as required for securing flexible connectors and exhaust tubing. We recommend mounting hardware such as clamps, suction cups, and magnets that are specifically designed for vehicle applications. We also recommend using structurally sound mounting points such as vehicle frames, trailer hitches, and payload tie-down fittings.

(e) Field testing may require portable electrical power to run your test equipment. Power your equipment, as follows:

(1) You may use electrical power from the vehicle, up to the highest power level, such that all the following are true:

(i) The vehicle power system is capable of safely supplying your power, such that your demand does not overload the vehicle's power system.

(ii) The engine emissions do not significantly change when you use vehicle power.

(iii) The power you demand does not increase output from the engine by more than 1 % of its maximum power.

(2) You may install your own portable power supply. For example, you may use batteries, fuel cells, a portable electrical generator, or any other power supply to supplement or replace your use of vehicle power. However, in no case may you provide power to the vehicle's power system.

§1065.915 Measurement instruments.

(a) Instrument specifications. We recommend that you use field-testing equipment that meets the specifications of subpart C of this part. For field testing, the specifications in Table 1 of §1065.915 apply instead of the specifications in Table 1 of §1065.205.

Table 1 of §1065.915–Recommended minimum measurement instrument performance for field testing

Measurement	Measured quantity symbol	Rise time and Fall time	Recording update frequency	Accuracy [1]	Repeatability[1]	Noise[1]
Engine speed transducer	f_n	1 s	5 Hz	5.0 % of pt. or 1.0 % of max.	2.0 % of pt. 1.0 % of max.	0.5 % of max
Engine torque estimator, BSFC	T	1 s	5 Hz	8.0 % of pt. or 3 % of max.	2.0 % of pt. 1.0 % of max.	1.0 % of max.
General pressure transducer (not a part of another instrument)	p	5 s	1 Hz	5.0 % of pt. or 2.0 % of max.	2.0 % of pt. 0.5 % of max.	1.0 % of max
Barometer	p_{barom}	50 s	0.1 Hz	250 Pa	200 Pa	100 Pa
General temperature sensor (not a part of another instrument)	T	5 s	1 Hz	1.0 % of pt. or 3 °C	0.5 % of pt. or 2 °C	0.5 °C
General dewpoint sensor	T_{dew}	50 s	0.1 Hz	3 °C	1 °C	0.5 °C
Exhaust flow meter	$\dot{n}$	1 s	5 Hz	5.0 % of pt. or 3.0 % of max.	2.0 % of pt.	2.0 % of max.
Constituent concentration, continuous analyzer	x	5 s	1 Hz	2.5 % of pt. 2.5 % of meas.	1.0 % of pt. 1.0 % of meas.	0.4 % of max.
Inertial PM balance	m_{PM}	5 s	1 Hz	2.0 % of pt. 2.0 % of meas.	1.0 % of pt. 1.0 % of meas.	0.4 % of max
Gravimetric PM balance	m_{PM}	N/A	N/A	See §1065.790	0.25 µg	0.1 µg

[1] Accuracy, repeatability, and noise are determined with the same collected data as described in §1065.305. "pt." refers to a single point at the average value expected during testing at the standard—the reference value used in §1065.305; "max." refers to the maximum value expected during testing at the standard over a test interval, not the maximum of the instrument's range; "meas" refers to the flow-weighted average measured value during any test interval.

(b) ECM signals. You may use signals from the engine's electronic control module (ECM) in place of values recorded by measurement instruments, subject to the following provisions:

(1) You must filter ECM signals to discard discontinuities and irrational records.

(2) You must perform time-alignment and dispersion of ECM signals, as described in §1065.201.

(3) You may use any combination of ECM signals, with or without other measurements, to determine the start-time and end-time of a test interval. Note that "test interval" is defined in subpart K of this part (Part 1065).

(4) You may use any combination of ECM signals along with other measurements to determine brake-specific emissions over a test interval.

(5) For each ECM signal that you use, you must state one of the following:

(i) The signal meets all the specifications, calibrations, and performance checks of any measurement instrument or system that the signal replaces.

(ii) The signal deviates from one or more of the specifications, calibrations, or performance checks, but its deviation does not prevent you from demonstrating that you meet the applicable standards. For example, your emissions results are sufficiently below the applicable standard such that the deviation would not significantly change the result.

(c) Redundant measurements. You may make any other measurements, such as redundant measurements, to ensure the quality of the data you collect.

(d) Ambient effects on instruments. Measurement instruments must not be affected by ambient conditions such as temperature, pressure, humidity, physical orientation, or mechanical shock and vibration. If an instrument is inherently affected by ambient conditions, those conditions must be monitored and the instrument's signals must be adjusted in a way that compensates for the ambient effect. Follow the instrument manufacturer's instructions for proper field installation.

(e) Engine torque estimator. Because engine brake torque may be difficult or impossible to measure during field testing, we allow other means of estimating torque based on other parameters. We recommend that the overall performance of any torque estimator should meet the performance specifications in Table 1 of §1065.915. Although you may develop your own torque estimator, we recommend using one of the following:

(1) ECM signals. You may use ECM signals to estimate torque if they meet the specifications of paragraph (b) of this section. Some electronic control modules calculate torque directly, based on the amount of fuel commanded to the engine and possibly other parameters. Other electronic control modules output a signal that is the ratio of the amount of fuel commanded divided by the maximum possible command at the given engine speed. This value is commonly called "% load". You may use this value in combination with the engine manufacturer's published maximum torque versus speed data to estimate engine torque. You may use a combination of ECM signals such as intake manifold pressure and temperature and engine speed if you have detailed laboratory data that can correlate such signals to torque.

(2) Brake-specific fuel consumption. You may multiply brake-specific fuel consumption (BSFC) information by fuel-specific emission results to determine brake-specific emission results. This approach avoids any requirement to estimate torque in the field. Fuel-specific results can be calculated from emission concentrations and a signal linear to exhaust flow rate. See §1065.650 for the calculations. You may interpolate brake-specific fuel consumption data, which might be available from an engine laboratory as a function of engine speed and other engine parameters that you can measure in the field. You may also use a single BSFC value that approximates the mean BSFC over a test interval (as defined in subpart K). This value may be a nominal BSFC value for all engine operation, which may be determined over one or more laboratory duty cycles. Refer to the standard-setting part to determine if the range of engine operation represented by a duty cycle approximates the range of operation that defines a field-testing test interval. Select a nominal BSFC based on duty cycles that best represent the range engine operation that defines a field-testing test interval.

§1065.920 Calibrations and performance checks.

(a) Use all of the applicable calibrations and performance checks in subpart D of this part, including the linearity checks in §1065.307, to calibrate and check your field test system.

(b) Your field-testing system must also meet an overall check. We require only that you maintain a record that shows that the make, model, and configuration of your system meets this check. The record itself may be supplied to you by the field-testing system manufacturer. However, we recommend that you generate your own record to verify that your specific system meets this check. If you upgrade or change the configuration of your field test system, we require that your record shows that your new configuration meets this check. The check consists of comparing field test data and laboratory data that are generated simultaneously over a repeated duty cycle in a laboratory. Two statistical comparisons are made. One statistical comparison checks the difference between the field test and lab data with respect to the lab standard. The second statistical comparison checks the field-testing system's upper confidence limit with respect to the lab's upper confidence limit. The field test upper confidence limit is determined only after applying any measurement allowance that is specified in the standard-setting part. Refer to §1065.605 for an example calculation of these two statistical tests. Perform the check as follows:

(1) Install your field-testing system on an engine in a dynamometer laboratory that meets all of the specifications of this part with respect to the engine and its applicable emission standards. We recommend that you select an engine that has emissions near its applicable laboratory standards.

(2) If the standard-setting part does not specify a duty cycle specifically for this check, select or create a duty cycle that has all of the following:

(i) Expected in-use engine operation. Consider using data from previous field tests to generate a cycle.

(ii) (20 to 40) min duration.

(iii) At least 10 discrete field-testing test intervals (e.g., 10 NTE events).

(iv) At least 50 % of its time in the operating range where valid field-testing test intervals may be calculated. For example, for heavy-duty highway compression-ignition engines, select a duty cycle in which at least 50 % of the engine operating time can be used to calculate valid NTE events.

(3) Prepare the laboratory and field-testing systems for emission testing as described in this part.

(4) Run at least seven valid repeat emission tests with the duty cycle, using a warmed up running engine. For a valid repeat of the duty cycle, the laboratory and field test systems must both return validated tests (e.g., tests must meet drift check, hydrocarbon contamination check, proportional validation, etc).

(5) Calculate all brake-specific emission results with the lab and the field test data for every field-testing test interval (e.g., each NTE event) that occurred. Repeat this for every repeated duty cycle.

(6) Calculate the mean for each test interval (e.g., each NTE event) with the repeated data for each test interval.

(7) For each test interval (e.g., each NTE event), subtract its lab mean from its field test mean, and divide the result by the applicable lab standard. If this result is within ±5 % for all test intervals (e.g., all NTE events), then the field test system passes this statistical test.

(8) First apply any measurement allowance to the field-testing results in paragraph (b)(5) of this section and recalculate the field test results in the same way you calculated the results for paragraph (b)(6) of this section. Then calculate two times the standard deviation for each of the test interval means from the adjusted field test results and the lab means from (b)(6) of this section. Add these values to each of their respective means. The result is the upper confidence limit for each test interval (e.g., each NTE event). For each test interval subtract the laboratory upper confidence limit from the field test upper confidence limit. If the result if this subtraction is less than or equal to zero for all the test intervals (e.g., all NTE events), then the field test system passes this statistical test.

(c) If the field test system passes both statistical tests in paragraphs (b)(7) and (b)(8) of this section, then the field-test system passes the overall field-testing system check.

§1065.925 Measurement equipment and analyzer preparation.

(a) If your engine must comply with a PM standard and you use a gravimetric balance to measure PM, follow the procedures for PM sample preconditioning and tare weighing as described in §1065.590.

(b) Verify that ambient conditions are initially within the limits specified in the standard-setting part.

(c) Install all of the equipment and measurement instruments required to conduct a field test.

(d) Power the measurement system, and allow pressures, temperatures, and flows to stabilize to their operating set points.

(e) Operate dilution systems and PM sampling systems at their expected flow rates using a bypass.

(f) Bypass or purge any gaseous sampling systems until sampling begins.

(g) Conduct calibrations and performance checks.

(h) Check for contamination in the NMHC sampling system as follows:

(1) Select the NMHC analyzer range for measuring the flow-weighted average concentration expected at the NMHC standard.

(2) Zero the NMHC analyzer using zero air introduced at the analyzer port.

(3) Span the NMHC analyzer using span gas introduced at the analyzer port.

(4) Overflow zero air at the NMHC probe or into a fitting between the NMHC probe and the transfer line.

(5) Measure the NMHC concentration in the sampling system:

(i) For continuous sampling, record the mean NMHC concentration as overflow zero air flows.

(ii) For batch sampling, fill the sample medium and record its mean concentration.

(6) Record this value as the initial NMHC concentration, $x_{NMHCinit}$ and use it to correct measured values as described in §1065.660.

(7) If this initial NMHC concentration exceeds the greatest of the following, determine the source of the contamination and take corrective action, such as purging the system or replacing contaminated portions:

(i) 2 % of the flow-weighted average concentration expected at the standard or during testing.

(ii) 2 mmol/mol.

(8) If corrective action does not resolve the deficiency, you may request to use the contaminated system as an alternate procedure under §1065.10.

§1065.930 Engine starting, restarting, and shutdown.

(a) Unless the standard-setting part specifies otherwise, follow these steps to start, restart, and shut down the test engine.

(b) Start or restart the engine according to the procedure recommended in the owners manual.

(c) If the engine does not start after 15 s of cranking, stop cranking and determine the reason it failed to start. However, you may crank the engine longer than 15 s, as long as the owners manual or the service-repair manual describes the longer cranking time as normal.

(d) Respond to engine stalling with the following steps:

(1) If the engine stalls during a required warm-up before emission sampling begins, restart the engine and continue warm-up.

(2) If the engine stalls at any other time after emission sampling begins, restart the engine and continue testing.

(e) Shut down and/or restart the engine according to the manufacturer's specifications, as needed during normal operation in-use, but continue emission sampling until the field test is completed.

§1065.935 Emission test sequence.

(a) Time the start of testing as follows:

(1) If the standard-setting part requires only hot-stabilized emission measurements, operate the engine in-use until the engine coolant's absolute temperature is within ±10 % of its mean value for the previous 2 min or until the engine thermostat controls engine temperature. For hot-stabilized emission measurements, bring the engine to idle. Start the field test within 10 min of achieving coolant temperature tolerance.

(2) If the standard-setting part requires hot-start emission measurements, shut down the engine after at least 2 min at the temperature tolerance specified in paragraph (a)(1) of this section. Start the field test within 20 min of engine shutdown.

(3) If the standard-setting part requires cold-start emission measurements, you may start the engine and test cycle if the highest temperature of an engine's lubricant, coolant, and aftertreatment systems is within the standard-setting part's ambient temperature limits for field testing.

(b) Take the following steps before emission sampling begins:

(1) For batch sampling, connect clean storage media, such as evacuated bags or tare-weighed PM sample media.

(2) Operate all measurement instruments according to the instrument manufacturer's instructions.

(3) Operate heaters, dilution systems, sample pumps, cooling fans, and the data-collection system.

(4) Preheat any heat exchangers in the measurement system.

(5) Allow heated components such as sample lines, filters, and pumps to stabilize at operating temperature.

(6) Perform vacuum side leak checks as described in §1065.345.

(7) Using bypass, adjust the sample flow rates to desired levels.

(8) Zero any integrating devices.

(9) Zero and span all constituent analyzers using NIST-traceable gases that meet the specifications of §1065.750.

(c) Start testing as follows:

(1) If the engine is already running and warmed up and starting is not part of field testing, start the field test by simultaneously sampling exhaust gases, recording data, and integrating measured values.

(2) If engine starting is part of field testing, start field testing by simultaneously sampling exhaust gases, recording data, and integrating measured values. Then start the engine.

(d) Continue the test as follows:

(1) Continue to sample exhaust, record data and integrate measured values throughout normal in-use operation of the engine. The engine may be stopped and started, but continue to sample emissions throughout the entire field test.

(2) Conduct periodic performance checks such as zero and span checks on measurement instruments, as recommended by the instrument manufacturer. Do not include data recorded during performance checks in emission calculations.

(3) You may periodically condition and analyze batch samples in-situ, including PM samples if you use an inertial balance.

(d) Stop testing as follows:

(1) On the last record of the field test, allow sampling system response times to elapse and cease sampling. Stop any integrator and indicate the end of the test cycle on the data-collection medium.

(2) Shut down the engine if it is not already shut down.

(g) Take the following steps after emission sampling is complete:

(1) Unless you weighed PM in-situ, such as by using an inertial PM balance, place any used PM samples into covered or sealed containers and return them to the PM-stabilization environment for subsequent weighing on a

gravimetric balance. If you weigh PM samples with a gravimetric balance, weigh PM samples according to §1065.595.

(2) As soon as practical after the duty cycle is complete, analyze any gaseous batch samples.

(3) Analyze background samples if dilution air was used.

(4) After quantifying exhaust gases, check drift of each analyzer:

(i) Record the mean analyzer value after stabilizing a zero gas to each analyzer. Stabilization may include time to purge an analyzer of any sample gas, plus any additional time to account for analyzer response.

(ii) Record mean analyzer values after stabilizing the span gas to the analyzer. Stabilization may include time to purge the analyzer of any sample gas, plus any additional time to account for analyzer response.

(iii) Use this data to validate and correct for drift as described in §1065.658.

(5) Drift invalidates a test if the drift correction exceeds ±4 % of the flow-weighted average concentration expected at either the standard or during a test interval, whichever is greater. Calculate and correct for drift as described in §1065.657.

(h) For any proportional batch sample such as a bag sample or PM sample, demonstrate that proportional sampling was maintained using one of the following:

(1) Record the sample flow rate and the total flow rate at 1 Hz or more frequently. Use this data with the statistical calculations in §1065.602 to determine the standard error of the estimate, *SE*, of the sample flow rate versus the total flow rate. For each test interval (as defined in subpart K), demonstrate that *SE* was less than or equal to 2.5 % of the mean sample flow rate. You may omit up to 5 % of the data points as outliers to improve *SE*.

(2) Record the sample flow rate and the total flow rate at 1 Hz or more frequently. For each test interval, demonstrate that each flow rate was constant within ±2.5 % of its respective mean or target flow rate.

(3) For critical-flow venturis, record venturi-inlet conditions at 1 Hz or more frequently. Demonstrate that the density at the venturi inlet was constant within ±2.5 % of the mean or target density over each test interval. For a CVS critical-flow venturi, you may demonstrate this by showing that the absolute temperature at the venturi inlet was constant within ±4 % of the mean or target temperature over each test interval.

(4) For positive-displacement pumps, record pump-inlet conditions at 1 Hz or more frequently. Demonstrate that the density at the pump inlet was constant within ±2.5 % of the mean or target density over each test interval. For a CVS pump, you may demonstrate this by showing that the absolute temperature at the pump inlet was constant within ±2 % of the mean or target temperature over each test interval.

(5) Using good engineering judgment, demonstrate using an engineering analysis that the proportional-flow control system inherently ensures proportional sampling under all circumstances expected during testing. For example, you use CFVs for sample flow and total flow and their inlet pressures and temperatures are always the same as each others, and they always operate under critical-flow conditions.

(i) Check all non-auto-ranging analyzer results to determine if any results indicate that an analyzer ever operated above 100 % of its range during the test. If an analyzer operated above 100 % of its range, perform the following:

(1) For a batch sample, re-analyze the batch sample using the next higher analyzer range that results in an instrument response less than 100 %. Report the result from the lowest range that results in analyzer operation at less than 100 % of its range.

(2) For continuous sampling, repeat the field test using the same vehicle, but use the next higher analyzer range that you estimate will not respond greater than 100 % of range. If the analyzer still operates above 100 % of its range, repeat the field test again using a higher range. Continue to repeat the field test until the analyzer operates at less than 100 % of its range for an entire field test. Report all results.

§1065.940 Emission calculations.

(a) Follow instructions in the standard-setting part for any other emission calculations.

(b) For each test interval, as determined by information in the standard-setting part, perform emission calculations as described in §1065.650 to calculate brake-specific emissions, using the field-testing specifications for analyzer noise in Table 1 of §1065.915.

Subpart K— Definitions and Other Reference Information

§1065.1001 Definitions.

The following definitions apply to this part. The definitions apply to all subparts unless we note otherwise. All undefined terms have the meaning the Act gives to them. The definitions follow:

300 series stainless steel means any stainless steel alloy with a Unified Numbering System for Metals and Alloys number designated from S30100 to S39000. For all instances in this part where we specify 300 series stainless steel, such parts must also have a smooth inner-wall construction. We recommend an average roughness, R_a no greater than 4 mm.

Accuracy means the absolute difference between a reference quantity and the arithmetic mean of ten mean measurements of that quantity. Instrument accuracy, repeatability, and noise are determined from the same data set. We specify a procedure for determining accuracy in §1065.305.

Act means the Clean Air Act, as amended, 42 U.S.C. 7401 - 7671q.

Adjustable parameter means any device, system, or element of design that someone can adjust (including those which are difficult to access) and that, if adjusted, may affect emissions or engine performance during emission testing or normal in-use operation. This includes, but is not limited to, parameters related to injection timing and fueling rate. In some cases this may exclude a parameter that is difficult to access if it cannot be adjusted to affect emissions without significantly degrading engine performance, or if it will not be adjusted in a way that affects emissions during in-use operation.

Aerodynamic diameter means the diameter of a spherical water droplet which settles at the same constant velocity as the particle being sampled.

Aftertreatment means relating to a catalytic converter, particulate filter, or any other system, component, or technology mounted downstream of the exhaust valve (or exhaust port) whose design function is to decrease emissions in the engine exhaust before it is exhausted to the environment. Exhaust-gas recirculation (EGR) and turbochargers are not aftertreatment.

Allowed procedures means procedures that we either specify in this part 1065 or in the standard-setting part or approve under §1065.10.

Aqueous condensation means the precipitation of water (H_2O)-containing constituents from a gas phase to a liquid phase. Aqueous condensation is a function of humidity, pressure, temperature, and concentrations of other constituent such as sulfuric acid. These parameters vary as a function of engine intake-air humidity, dilution air humidity, engine air-to-fuel ratio, and fuel composition—including the amount of hydrogen and sulfur in the fuel.

Auto-ranging means a constituent analyzer function that automatically changes the analyzer gain to a higher range as a constituent's concentration approaches 100 % of the analyzer's current range.

Auxiliary emission-control device means any element of design that senses temperature, motive speed, engine RPM, transmission gear, or any other parameter for the purpose of activating, modulating, delaying, or deactivating the operation of any part of the emission-control system.

Barometric pressure means the wet, absolute, atmospheric static pressure. Note that if you measure barometric pressure in a duct, you must ensure that there are negligible pressure losses between the atmosphere and your measurement location, and you must account for changes in the duct's static pressure resulting from the flow.

Brake power has the meaning given in the standard-setting part. If it is not defined in the standard-setting part, brake power means the usable power output of the engine, not including power required to fuel, lubricate, or heat the engine, circulate coolant to the engine, or to operate aftertreatment devices. If these accessories are not powered by the engine during a test, subtract the work required to perform these functions from the total work used in brake-specific emission calculations. Subtract engine fan work from total work only for air-cooled engines.

Calibration means the set of specifications and tolerances specific to a particular design, version, or application of a component or assembly capable of functionally describing its operation over its working range.

Certification means obtaining a certificate of conformity for an engine family that complies with the emission standards and requirements in this part.

Compression-ignition means relating to a type of reciprocating, internal-combustion engine that is not a spark-ignition engine.

Confidence interval means the range associated with a probability that a quantity will be considered statistically equivalent to a reference quantity.

Constant-speed engine means an engine whose certification is limited to constant-speed operation. Engines whose constant-speed governor function is removed or disabled are no longer constant-speed engines.

Constant-speed operation means engine operation with a governor that controls the operator input to maintain an engine at a reference speed, even under changing load. For example, an isochronous governor changes reference speed temporarily during a load change, then returns the engine to its original reference speed after the engine stabilizes. Isochronous governors typically allow speed changes up to 1.0 %. Another example is a speed-droop governor, which has a fixed reference speed at zero load and allows the reference speed to decrease as load increases. With speed-droop governors, speed typically decreases (3 to 10) % below the reference speed at zero load, such that the minimum reference speed occurs near the engine's point of maximum power.

Coriolis meter means a flow-measurement instrument that determines the mass flow of a fluid by sensing the vibration and twist of specially designed flow tubes as the flow passes through them. The twisting characteristic is called the Coriolis effect. According to Newton's Second Law of Motion, the amount of sensor tube twist is directly proportional to the mass flow rate of the fluid flowing through the tube. See §1065.220.

Designated Compliance Officer means the Manager, Engine Programs Group (6405-J), U.S. Environmental Protection Agency, 1200 Pennsylvania Ave., NW., Washington, DC 20460.

Discrete-mode means relating to the discrete-mode type of steady-state test described in the standard-setting part.

Drift means the difference between a zero or calibration signal and the respective value reported by a measurement instrument immediately after it was used in an emission test, provided that the instrument was zeroed and spanned just before the test.

Duty cycle means a series of speeds and torques that an engine must follow during a laboratory test. Duty cycles are specified in the standard-setting part. A single duty cycle may consist of one or more test intervals. For example, a duty cycle may be a ramped-modal cycle, which has one test interval; a cold-start plus hot-start transient cycle, which has two test intervals; or a discrete-mode cycle, which has one test interval for each mode.

Electronic control module means an engine's electronic device that uses data from engine sensors to control engine parameters.

Emission-control system means any device, system, or element of design that controls or reduces the regulated emissions from an engine.

Emission-data engine means an engine that is tested for certification. This includes engines tested to establish deterioration factors.

Emission-related maintenance means maintenance that substantially affects emissions or is likely to substantially affect emission deterioration.

Engine means an engine to which this part applies.

Engine family means a group of engines with similar emission characteristics throughout the useful life, as specified in the standard-setting part.

Exhaust-gas recirculation means a technology that reduces emissions by routing exhaust gases that had been exhausted from the combustion chamber(s) back into the engine to be mixed with incoming air before or during combustion. The use of valve timing to increase the amount of residual exhaust gas in the combustion chamber(s) that is mixed with incoming air before or during combustion is not considered exhaust-gas recirculation for the purposes of this part.

Fall time, t_{90-10}, means the time interval from (90 to 10) % of a measurement instrument's response after any step decrease to the input.

Flow-weighted average means the average of a quantity after it is weighted proportional to a corresponding flow rate. For example, if a gas concentration is measured continuously from the raw exhaust of an engine, its flow-weighted average concentration is the sum of the products of each recorded concentration times its respective exhaust flow rate, divided by the number of recorded values. As another example, the bag concentration from a CVS system is the same as the flow-weighted average concentration because the CVS system itself flow-weights the bag concentration.

Fuel system means all components involved in transporting, metering, and mixing the fuel from the fuel tank to the combustion chamber(s), including the fuel tank, fuel tank cap, fuel pump, fuel filters, fuel lines, carburetor or fuel-injection components, and all fuel-system vents.

Fuel type means a general category of fuels such as gasoline or LPG. There can be multiple grades within a single type of fuel, such as summer-grade gasoline and winter-grade gasoline.

Good engineering judgment means judgments made consistent with generally accepted scientific and engineering principles and all available relevant information. See 40 CFR 1068.5 for the administrative process we use to evaluate good engineering judgment.

HEPA filter means high-efficiency particulate air filters that are rated to achieve a minimum particle-removal efficiency of 99.97 % using ASTM F 1471-93 (incorporated by reference in §1065.1010).

Identification number means a unique specification (for example, a model number/serial number combination) that allows someone to distinguish a particular engine from other similar engines.

Idle speed means the lowest engine speed possible with zero load where an engine governor function controls engine speed. For engines without a governor function that controls idle speed, idle speed means the manufacturer-declared value for lowest engine speed possible with zero load. Note that warm idle speed is the idle speed of a warmed-up engine.

Intermediate test speed has the meaning we give in §1065.610.

Linearity means the degree to which measured values agree with respective reference values. Linearity is quantified using a linear regression of pairs of measured values and reference values over the range from the minimum to the maximum values expected or observed during testing. Perfect linearity would result in an intercept value of zero and a slope of one. (Note: The term "linearity" is not used in this part to refer to the shape of a measurement instrument’s unprocessed response curve, such as a curve relating emission concentration to voltage output. A properly performing instrument with a nonlinear response curve will meet linearity specifications.)

Manufacturer has the meaning given in section 216(1) of the Act. In general, this term includes any person who manufactures an engine or vehicle for sale in the United States or otherwise introduces a new nonroad engine into commerce in the United States. This includes importers who import engines or vehicles for resale.

Maximum engine speed has the meaning we give in §1065.610.

Maximum test torque has the meaning we give in §1065.610.

NIST-traceable means relating to a standard value that can be related to NIST-stated references through an unbroken chain of comparisons, all having stated uncertainties.

Noise means the precision of 25 consecutive samples from a measurement instrument as it quantifies a zero or reference value. Instrument noise, repeatability, and accuracy are determined from the same data set. We specify a procedure for determining noise in §1065.305.

Nonmethane hydrocarbons means the sum of all hydrocarbon species except methane. Refer to §1065.660 for NMHC determination.

Nonroad means relating to nonroad engines.

Nonroad engine has the meaning we give in 40 CFR 1068.30. In general this means all internal-combustion engines except motor vehicle engines, stationary engines, engines used solely for competition, or engines used in aircraft.

Operator demand means an engine operator's input to control engine output. The operator may be a person, a governor, or other controller that mechanically or electronically signals an input that demands engine output. Input may be an accelerator pedal or signal, a throttle-control lever or signal, a fuel lever or signal, a speed lever or signal, or a governor setpoint or signal. Output means engine power, P, which is the product of engine speed, f_n, and engine torque, T.

Oxides of nitrogen means compounds containing only nitrogen and oxygen as measured by the procedures specified in this part. Oxides of nitrogen are expressed quantitatively as if the NO is in the form of NO_2, such that you use a molar mass for all oxides of nitrogen equivalent to that of NO_2. We specify a procedure for determining NO_x in §1065.650.

Oxygenated fuels means fuels composed of oxygen-containing compounds, such as ethanol or methanol. Generally, testing engines that use oxygenated fuels requires the use of the sampling methods in subpart I of this part. However, you should read the standard-setting part and subpart I of this part to determine which sampling methods to use.

Partial pressure means the pressure, p attributable to a constituent in a gas mixture. For an ideal gas the partial pressure divided by the total pressure is equal to the constituent's molar concentration, x.

Precision means the two times the standard deviation of a set of measured values of a single zero or reference quantity.

Procedures means all aspects of engine testing, including the equipment specifications, calibrations, calculations and other protocols and specifications needed to measure emissions, unless we specify otherwise.

PTFE means polytetrafluoroethylene, which is commonly known as Teflon™.

Ramped-modal means relating to the ramped-modal type of steady-state test described in the standard-setting part.

Regression statistics means any of the set of statistics specified in §1065.602(i) through (l).

Repeatability means the precision of ten mean measurements of a reference quantity. Instrument repeatability, accuracy, and noise must be determined from the same data set. We specify a procedure for determining repeatability in §1065.305.

Revoke has the meaning we give in 40 CFR 1068.30.

Rise time, $t_{10\text{-}90}$ means the time interval from (10 to 90) % of a measurement instrument's response after any step increase to the input.

Roughness (or average roughness, R_a) means the size of finely distributed vertical surface deviations from a smooth surface, as determined when traversing a surface. It is an integral of the absolute value of the roughness profile measured over an evaluation length.

Round means to round numbers according to ASTM E29-02 (incorporated by reference in §1065.1010), unless otherwise specified.

Scheduled maintenance means adjusting, repairing, removing, disassembling, cleaning, or replacing components or systems periodically to keep a part or system from failing, malfunctioning, or wearing prematurely. It also may

mean actions you expect are necessary to correct an overt indication of failure or malfunction for which periodic maintenance is not appropriate.

Span means to adjust an instrument so that it gives a proper response to a calibration standard that represents between 75 % and 100 % of the maximum value in the instrument range or expected rang of use.

Specified procedures means procedures we specify in this part 1065 or the standard-setting part.

Spark-ignition means relating to a gasoline-fueled engine or any other type of engine with a spark plug (or other sparking device) and with operating characteristics significantly similar to the theoretical Otto combustion cycle. Spark-ignition engines usually use a throttle to regulate intake air flow to control power during normal operation.

Standard-setting part means the part in the Code of Federal Regulations that defines emission standards for a particular engine. See §1065.1(a).

Steady-state means relating to emission tests in which engine speed and load are held at a finite set of essentially constant values. Steady-state tests are either discrete-mode tests or ramped-modal tests.

Stoichiometric means the ratio of air and fuel such that if the fuel were fully oxidized, there would be no remaining fuel or oxygen. For example, stoichiometric combustion in a gasoline-fueled engine typically occurs at an air-to-fuel mass ratio of about 14.7.

Test engine means an engine in a test sample.

Test interval means a duration of time over which you determine brake-specific emissions. For example, a standard-setting part may specify a complete laboratory duty cycle as a cold-start test interval, plus a hot-start test interval. As another example, a standard-setting part may specify a field test interval (eg. an NTE event), as a duration of time over which an engine operates within a certain range of speed and torque. In cases where multiple test intervals occur, the standard-setting parts specify additional calculations that weight and combine results to arrive at composite values for comparison against the applicable standards.

Test sample means the collection of engines selected from the population of an engine family for emission testing.

Tolerance means the interval in which 95 % of a set of recorded values of a certain quantity must lie. Use the specified recording frequencies and time intervals to determine if a quantity is within the applicable tolerance.

Total hydrocarbon means the combined mass of organic compounds measured by the specified procedure for measuring total hydrocarbon, expressed as a hydrocarbon with a hydrogen-to-carbon mass ratio of 1.85:1.

Total hydrocarbon equivalent means the sum of the carbon mass contributions of non-oxygenated hydrocarbons, alcohols and aldehydes, or other organic compounds that are measured separately as contained in a gas sample, expressed as exhaust hydrocarbon from petroleum-fueled engines. The hydrogen-to-carbon ratio of the equivalent hydrocarbon is 1.85:1.

United States means the States, the District of Columbia, the Commonwealth of Puerto Rico, the Commonwealth of the Northern Mariana Islands, Guam, American Samoa, and the U.S. Virgin Islands.

Useful life means the period during which a new nonroad engine is required to comply with all applicable emission standards. The standard-setting part defines the specific useful-life periods for individual engines.

Variable-speed engine means an engine that is not a constant-speed engine.

Vehicle means any vehicle, vessel, or type of equipment using engines to which this part applies. For purposes of this part, vehicle may include immobile machines.

We (us, our) means the Administrator of the Environmental Protection Agency and any authorized representatives.

Zero means to adjust an instrument so it gives a zero response to a zero calibration standard, such as purified nitrogen or purified air for measuring concentrations of emission constituents.

§1065.1005 Symbols, abbreviations, acronyms, and units of measure.

The procedures in this part generally follow the International System of Units (SI), as detailed in NIST Special Publication 811, 1995 Edition, "Guide for the Use of the International System, of Units (SI)," which we incorporate by reference in §1065.1010. See §1065.25 for specific provisions related to these conventions. This section summarizes the way we use symbols, units of measure, and other abbreviations.

(a) Symbols for quantities. This part uses the following symbols and units of measure for various quantities:

Symbol	Quantity	Unit	Unit Symbol	Base SI units
%	percent	0.01	%	10^{-2}
α	atomic hydrogen to carbon ratio	mole per mole	mol/mol	1
A	area	square meter	m^2	m^2
a_0	intercept of least squares regression			
a_1	slope of least squares regression			
β	ratio of diameters	meter per meter	m/m	1
β	atomic oxygen to carbon ratio	mole per mole	mol/mol	1
D	diameter	meter	m	m
DF	dilution air fraction	mole per mol	mol/mol	1
h	viscosity, dynamic	pascal second	Pa·s	$m^{-1}\cdot kg\cdot s^{-1}$
ε	error between a quantity and its reference			
e	brake-specific emission	gram per kilowatt hour	g/kW·h	$g\cdot 3.6^{-1}\cdot 10^{6}\cdot m^{-2}\cdot kg\cdot s^{2}$
F	F-test statistic			
f	frequency	hertz	Hz	s^{-1}
f_n	rotational frequency (shaft)	revolutions per minute	rev/min	$2\cdot pi\cdot 60^{-1}\cdot s^{-1}$
γ	ratio of specific heats	(joule per kilogram kelvin) per (joule per kilogram kelvin)	(J/(kg·K))/(J/(kg·K))	1
K	correction factor			1
l	length	meter	m	m
M	molar mass	gram per mole	g/mol	$10^{-3}\cdot kg\cdot mol^{-1}$
m	mass	kilogram	kg	kg
$\dot{m}$	mass rate	kilogram per second	kg/s	$kg\cdot s^{-1}$

Symbol	Quantity	Unit	Unit Symbol	Base SI units
ν	viscosity, kinematic	meter squared per second	m^2/s	$m^2\cdot s^{-1}$
N	total number in series			
n	amount of substance	mole	mol	mol
$\dot{n}$	amount of substance rate	mole per second	mol/s	$mol\cdot s^{-1}$
P	power	kilowatt	kW	$103\cdot m^2\cdot kg\cdot s^{-3}$
PF	penetration fraction			
p	pressure	pascal	Pa	$m^{-1}\cdot kg\cdot s^{-2}$
ρ	mass density	kilogram per cubic meter	kg/m^3	$kg\cdot m^{-3}$
r	ratio of pressures	pascal per pascal	Pa/Pa	1

r^2	coefficient of determination			
R_a	average surface roughness	micrometer	µm	m^{-6}
$Re^{\#}$	Reynolds number			
RF	response factor			
σ	non-biased standard deviation			
SE	standard estimate of error			
T	absolute temperature	kelvin	K	K
T	Celsius temperature	degree Celsius	°C	K-273.15
T	torque (moment of force)	newton meter	N·m	$m^2 \cdot kg \cdot s^{-2}$
t	time	second	s	s
Δt	time interval, period, 1/frequency	second	s	s
V	volume	cubic meter	m^3	m^3
$\dot{V}$	volume rate	cubic meter per second	m^3/s	$m^3 \cdot s^{-1}$
W	work	kilowatt hour	kW·h	$3.6 \cdot 10^{-6} \cdot m^2 \cdot kg \cdot s^{-2}$
x	amount of substance fraction	mole per mole	mol/mol	1
$\overline{x}$	flow-weighted average concentration	mole per mole	mol/mol	1
y	generic variable			

(b) Symbols for chemical species. This part uses the following symbols for chemical species and exhaust constituents:

Symbol	Species
Ar	argon
C	carbon
CH_4	methane
C_2H_6	ethane
C_3H_8	propane
C_4H_{10}	butane
C_5H_{12}	pentane
CO	carbon monoxide
CO_2	carbon dioxide
H	atomic hydrogen
H_2	molecular hydrogen
H_2O	water
He	helium
^{85}Kr	krypton 85
N_2	molecular nitrogen
NMHC	nonmethane hydrocarbon
NMHCE	nonmethane hydrocarbon equivalent
NO	nitric oxide
NO_2	nitrogen dioxide
NO_x	oxides of nitrogen
O_2	molecular oxygen
^{210}Po	polonium 210

PM	particulate mass
S	sulfur
THC	total hydrocarbons

(c) Prefixes. This part uses the following prefixes to define a quantity:

Symbol	Quantity	Value
μ	micro	10^{-6}
m	milli	10^{-3}
c	centi	10^{-2}
k	kilo	10^{3}
M	mega	10^{6}

(d) Superscripts. This part uses the following superscripts to define a quantity:

Superscript	Quantity
overbar (such as $\overline{y}$)	arithmetic mean.
overdot (such as $\dot{y}$)	quantity per unit time.

(e) Subscripts. This part uses the following subscripts to define a quantity:

Subscript	Quantity
abs	absolute quantity
act	actual condition
air	air, dry
barom	barometer
cal	calibration quantity
CFV	critical flow venturi
cor	corrected quantity
dil	dilution air
dexh	diluted exhaust
exh	raw exhaust
exp	expected quantity
i	an individual of a series
idle	condition at idle
in	quantity in
j	an individual of a series
max	the maximum (i.e., peak) value expected at the standard over a test interval; not the maximum of an instrument range.
meas	measured quantity
out	quantity out
part	partial quantity
PDP	positive-displacement pump
ref	reference quantity
rev	revolution
sat	saturated condition
slip	PDP slip
span	span quantity
SSV	subsonic venturi
std	standard condition

test	test quantity
uncor	uncorrected quantity
zero	zero quantity

(f) Constants. (1) This part uses the following constants for the composition of dry air:

Symbol	Quantity	mol/mol
x_{Arair}	amount of argon in dry air	0.00934
x_{CO2air}	amount of carbon dioxide in dry air	0.000375
x_{N2air}	amount of nitrogen in dry air	0.78084
x_{O2air}	amount of oxygen in dry air	0.209445

(2) This part uses the following molar masses of chemical species:

Symbol	Quantity	g/mol (10^{-3}·kg·mol^{-1})
M_{air}	molar mass of dry air [1]	28.96559
M_{Ar}	molar mass of argon	39.948
M_{C}	molar mass of carbon	12.0107
M_{CO}	molar mass of carbon monoxide	28.0101
M_{CO2}	molar mass of carbon dioxide	44.0095
M_{H}	molar mass of atomic hydrogen	1.00794
M_{H2}	molar mass of molecular hydrogen	2.01588
M_{H2O}	molar mass of water	18.01528
M_{He}	molar mass of helium	4.002602
M_{N}	molar mass of atomic nitrogen	14.0067
M_{N2}	molar mass of molecular nitrogen	28.0134
M_{NMHC}	molar mass of nonmethane hydrocarbon [2]	13.875389
M_{NMHCE}	molar mass of nonmethane equivalent hydrocarbon [2]	13.875389
M_{NOx}	molar mass of oxides of nitrogen equivalent (NO_2)	46.0055
M_{O}	molar mass of atomic oxygen	15.9994
M_{O2}	molar mass of molecular oxygen	31.9988
M_{C3H8}	molar mass of propane	44.09562
M_{S}	molar mass of sulfur	32.065
M_{THC}	molar mass of total hydrocarbon [2]	13.875389
M_{THCE}	molar mass of total hydrocarbon equivalent [2]	13.875389

[1] See paragraph (f)(1) of this section for the composition of dry air.

[2] The molar masses of THC, THCE, NMHC, and NMHCE are defined by an atomic hydrogen-to-carbon ratio, α, of 1.85.

(3) This part uses the following molar gas constant for ideal gases:

Symbol	Quantity	J/mol·K (m^2·kg·s^{-2}·mol^{-1}·K^{-1})
R	molar gas constant	8.314472

(4) This part uses the following ratios of specific heats for dilution air and diluted exhaust:

Symbol	Quantity	[J/(kg·K)]/[J/(kg·K)]
γ_{dil}	ratio of specific heats for diluted exhaust	1.385
γ_{air}	ratio of specific heats for dilution or intake air	1.399

(g) Other acronyms and abbreviations. This part uses the following additional abbreviations and acronyms:

ASTM	American Society for Testing and Materials.
BSFC	brake-specific fuel consumption.
CFR	Code of Federal Regulations.
CFV	critical-flow venturi.
CI	compression-ignition.
CLD	chemiluminescent detector.
CVS	constant-volume sampler.
DF	deterioration factor.
ECM	electronic control module.
EFC	electronic flow control.
EPA	Environmental Protection Agency.
FID	flame ionization detector.
IBP	initial boiling point.
INF	infinity.
ISO	International Organization for Standardization.
LPG	liquefied petroleum gas.
NDIR	nondispersive infrared.
NDUV	nondispersive ultraviolet.
NIST	National Institute for Standards and Technology.
PDP	positive-displacement pump.
PFD	partial-flow dilution.
pt.	a single point at the average value expected at the standard.
PTFE	polytetrafluoroethylene (commonly known as Teflon™).
RMS	root-mean square.
RTD	resistive temperature detector.
SSV	subsonic venturi.
SI	spark-ignition.
UFM	ultrasonic flow meter.
U.S.C.	United States Code.
ZrO_2	Zirconia.

§1065.1010 Reference materials.

Documents listed in this section have been incorporated by reference into this part. The Director of the Federal Register approved the incorporation by reference as prescribed in 5 U.S.C. 552(a) and 1 CFR part 51. Anyone may inspect copies at the U.S. EPA, Air and Radiation Docket and Information Center, 1301 Constitution Ave., NW., Room B102, EPA West Building, Washington, DC 20460 or at the National Archives and Records Administration (NARA). For information on the availability of this material at NARA, call 202-741-6030, or go to: http://www.archives.gov/federal_register/code_of_federal_regulations/ibr_locations.html.

(a) ASTM material. Table 1 of this section lists material from the American Society for Testing and Materials that we have incorporated by reference. The first column lists the number and name of the material. The second column lists the sections of this part where we reference it. Anyone may purchase copies of these materials from the American Society for Testing and Materials, 100 Barr Harbor Dr., P.O. Box C700, West Conshohocken, PA 19428. Table 1 follows:

Table 1 of §1065.1010–ASTM materials

Document number and name	Part 1065 reference
ASTM D 86-03, Standard Test Method for Distillation of Petroleum Products at Atmospheric Pressure.	1065.703, 1065.710
ASTM D 93-02a, Standard Test Methods for Flash Point by Pensky-Martens Closed Cup Tester.	1065.703
ASTM D 287–92, (Reapproved 2000), Standard Test Method for API Gravity of Crude Petroleum and Petroleum Products (Hydrometer Method).	1065.703
ASTM D 323-99a, Standard Test Method for Vapor Pressure of Petroleum Products (Reid Method).	1065.710
ASTM D 445-03, Standard Test Method for Kinematic Viscosity of Transparent and Opaque Liquids (and the Calculation of Dynamic Viscosity).	1065.703
ASTM D 613-03b, Standard Test Method for Cetane Number of Diesel Fuel Oil.	1065.703
ASTM D 1266-98, Standard Test Method for Sulfur in Petroleum Products (Lamp Method).	1065.710
ASTM D 1319-02a, Standard Test Method for Hydrocarbon Types in Liquid Petroleum Products by Fluorescent Indicator Adsorption.	1065.710
ASTM D 1267-02, Standard Test Method for Gage Vapor Pressure of Liquefied Petroleum (LP) Gases (LP-Gas Method).	1065.720
ASTM D 1837-02a, Standard Test Method for Volatility of Liquefied Petroleum (LP) Gases.	1065.720
ASTM D 1838-03, (Reapproved 2001), Standard Test Method for Copper Strip Corrosion by Liquefied Petroleum (LP) Gases.	1065.720
ASTM D 1945-03, (Reapproved 2001), Standard Test Method for Analysis of Natural Gas by Gas Chromatography.	1065.715
ASTM D 2158-02, Standard Test Method for Residues in Liquefied Petroleum (LP) Gases.	1065.720
ASTM D 2163-91, (Reapproved 1996), Standard Test Method for Analysis of Liquefied Petroleum (LP) Gases and Propene Concentrates by Gas Chromatography.	1065.720
ASTM D 2598-02, Standard Practice for Calculation of Certain Physical Properties of Liquefied Petroleum (LP) Gases from Compositional Analysis.	1065.720
ASTM D 2622-03, Standard Test Method for Sulfur in Petroleum Products by Wavelength Dispersive X-ray Fluorescence Spectrometry.	1065.703
ASTM D 2713-91, (Reapproved 2001), Standard Test Method for Dryness of Propane (Valve Freeze Method).	1065.720
ASTM D 2784-98, Standard Test Method for Sulfur in Liquefied Petroleum Gases (Oxy-Hydrogen Burner or Lamp).	1065.720
ASTM D 2986-95a, (Reapproved 1999), Standard Practice for Evaluation of Air Assay Media by the Monodisperse DOP (Dioctyl Phthalate) Smoke Test.	1065.170
ASTM D 3231-02, Standard Test Method for Phosphorus in Gasoline.	1065.710
ASTM D 3237-02, Standard Test Method for Lead in Gasoline By Atomic Absorption Spectroscopy.	1065.710
ASTM D 5186-03, Standard Test Method for Determination of the Aromatic Content and Polynuclear Aromatic Content of Diesel Fuels and Aviation Turbine Fuels By Supercritical Fluid Chromatography.	1065.703
ASTM E 617-97, (Reapproved 2003), Standard Specification for Laboratory Weights and Precision Mass Standards.	1065.790
ASTM F 1471-93, (Reapproved 2001), Standard Test Method for Air Cleaning Performance of a High-Efficiency Particulate Air Filter System.	1065.140

(b) ISO material. Table 2 of this section lists material from the International Organization for Standardization that we have incorporated by reference. The first column lists the number and name of the material. The second column

lists the section of this part where we reference it. Anyone may purchase copies of these materials from the International Organization for Standardization, Case Postale 56, CH-1211 Geneva 20, Switzerland. Table 2 follows:

Table 2 of §1065.1010–ISO materials

Document number and name	Part 1065 reference
ISO 8178-1, Reciprocating internal combustion engines—Exhaust emission measurement—Part 1: Test-bed measurement of gaseous and particulate exhaust emissions, 2004.	1065.130, 1065.135, 1065.140, 1065.155
ISO 14644-1, Cleanrooms and associated controlled environments.	1065.190

(c) NIST material. Table 3 of this section lists material from the National Institute of Standards and Technology that we have incorporated by reference. The first column lists the number and name of the material. The second column lists the section of this part where we reference it. Anyone may request these materials from the National Institute of Standards and Technology, NIST, 100 Bureau Drive, Stop 3460, Gaithersburg, MD 20899-3460. Table 3 follows:

Table 3 of §1065.1010–NIST materials

Document number and name	Part 1065 reference
Special Publication 811, 1995 Edition, Guide for the Use of the International System of Units (SI), Barry N. Taylor, Physics Laboratory.	1065.20, 1065.650, 1065.1005

(d) SAE material. Table 4 of this section lists material from the Society of Automotive Engineering that we have incorporated by reference. The first column lists the number and name of the material. The second column lists the sections of this part where we reference it. Anyone may purchase copies of these materials from the Society of Automotive Engineers, 400 Commonwealth Drive, Warrendale, PA 15096. Table 4 follows:

Table 4 of §1065.1010–SAE materials

Document number and name	Part 1065 reference
"Optimization of Flame Ionization Detector for Determination of Hydrocarbon in Diluted Automotive Exhausts,"Reschke Glen D., SAE 770141.	1065.360
"Relationships Between Instantaneous and Measured Emissions in Heavy Duty Applications," Ganesan B.and Clark N. N., West Virginia University, SAE 2001-01-3536.	1065.201

PART 1068— GENERAL COMPLIANCE PROVISIONS FOR NONROAD PROGRAMS

260. The authority citation for part 1068 is revised to read as follows:

Authority: 42 U.S.C. 7401 - 7671q.

261. Section 1068.10 is revised to read as follows:

§1068.10 What provisions apply to confidential information?

(a) Clearly show what you consider confidential by marking, circling, bracketing, stamping, or some other method.

(b) We will store your confidential information as described in 40 CFR part 2. Also, we will disclose it only as specified in 40 CFR part 2. This applies both to any information you send us and to any information we collect from inspections, audits, or other site visits.

(c) If you send us a second copy without the confidential information, we will assume it contains nothing confidential whenever we need to release information from it.

(d) If you send us information without claiming it is confidential, we may make it available to the public without further notice to you, as described in 40 CFR 2.204.

262. Section 1068.30 is amended by revising the definition for "United States" and adding definitions for "Days", "Defeat device", "Exempted", "Good engineering judgment", "Motor vehicle", "Revoke", "Suspend", and "Void" in alphabetical order to read as follows:

§1068.30 What definitions apply to this part?

* * * * *

Days means calendar days, including weekends and holidays.

Defeat device means has the meaning we give in the standard-setting part.

* * * * *

Exempted means relating to an engine that is not required to meet otherwise applicable standards. Exempted engines must conform to regulatory conditions specified for an exemption in this part 1068 or in the standard-setting part. Exempted engines are deemed to be "subject to" the standards of the standard-setting part, even though they are not required to comply with the otherwise applicable requirements. Engines exempted with respect to a certain tier of standards may be required to comply with an earlier tier of standards as a condition of the exemption; for example, engines exempted with respect to Tier 2 standards may be required to comply with Tier 1 standards.

Good engineering judgment means judgments made consistent with generally accepted scientific and engineering principles and all available relevant information. See 40 CFR 1068.5 for the administrative process we use to evaluate good engineering judgment.

* * * * *

Motor vehicle has the meaning we give in 40 CFR 85.1703(a). In general, motor vehicle means any vehicle that EPA deems to be capable of safe and practical use on streets or highways that has a maximum ground speed above 40 kilometers per hour (25 miles per hour) over level, paved surfaces.

* * * * *

Revoke means to terminate the certificate or an exemption for an engine family. If we revoke a certificate or exemption, you must apply for a new certificate or exemption before continuing to introduce the affected engines into commerce. This does not apply to engines you no longer possess.

* * * * *

Suspend means to temporarily discontinue the certificate or an exemption for an engine family. If we suspend a certificate, you may not introduce into commerce engines from that engine family unless we reinstate the certificate or approve a new one. If we suspend an exemption, you may not introduce into commerce engines that were previously covered by the exemption unless we reinstate the exemption.

* * * * *

United States means the States, the District of Columbia, the Commonwealth of Puerto Rico, the Commonwealth of the Northern Mariana Islands, Guam, American Samoa, and the U.S. Virgin Islands.

Void means to invalidate a certificate or an exemption ab initio. If we void a certificate, all the engines introduced into commerce under that engine family for that model year are considered noncompliant, and you are liable for each engine introduced into commerce under the certificate and may face civil or criminal penalties or both. This applies equally to all engines in the engine family, including engines introduced into commerce before we voided the certificate. If we void an exemption, all the engines introduced into commerce under that exemption are considered uncertified (or nonconforming), and you are liable for each engine introduced into commerce under the exemption and may face civil or criminal penalties or both. You may not introduce into commerce any additional engines using the voided exemption.

* * * * *

263. Section 1068.101 is amended by revising the introductory text and paragraphs (a) and (b) to read as follows:

§1068.101 What general actions does this regulation prohibit?

This section specifies actions that are prohibited and the maximum civil penalties that we can assess for each violation. The maximum penalty values listed in paragraphs (a) and (b) of this section are shown for calendar year 2004. As described in paragraph (e) of this section, maximum penalty limits for later years are set forth in 40 CFR part 19.

(a) The following prohibitions and requirements apply to manufacturers of new engines and manufacturers of equipment containing these engines, except as described in subparts C and D of this part:

(1) Introduction into commerce. You may not sell, offer for sale, or introduce or deliver into commerce in the United States or import into the United States any new engine or equipment after emission standards take effect for that engine or equipment, unless it has a valid certificate of conformity for its model year and the required label or tag. You also may not take any of the actions listed in the previous sentence with respect to any equipment containing an engine subject to this part's provisions, unless the engine has a valid and appropriate certificate of conformity and the required engine label or tag. For purposes of this paragraph (a)(1), an appropriate certificate of conformity is one that applies for the same model year as the model year of the equipment (except as allowed by §1068.105(a)), covers the appropriate category of engines (such as locomotive or CI marine), and conforms to all requirements specified for equipment in the standard-setting part. The requirements of this paragraph (a)(1) also cover new engines you produce to replace an older engine in a piece of equipment, unless the engine qualifies for the replacement-engine exemption in §1068.240. We may assess a civil penalty up to $32,500 for each engine in violation.

(2) Reporting and recordkeeping. This chapter requires you to record certain types of information to show that you meet our standards. You must comply with these requirements to make and maintain required records (including those described in §1068.501). You may not deny us access to your records or the ability to copy your records if we have the authority to see or copy them. Also, you must give us the required reports or information without delay. Failure to comply with the requirements of this paragraph is prohibited. We may assess a civil penalty up to $32,500 for each day you are in violation.

(3) Testing and access to facilities. You may not keep us from entering your facility to test engines or inspect if we are authorized to do so. Also, you must perform the tests we require (or have the tests done for you). Failure to perform this testing is prohibited. We may assess a civil penalty up to $32,500 for each day you are in violation.

(b) The following prohibitions apply to everyone with respect to the engines to which this part applies:

(1) Tampering. You may not remove or disable a device or element of design that may affect an engine's emission levels. This restriction applies before and after the engine is placed in service. Section 1068.120 describes how this applies to rebuilding engines. For a manufacturer or dealer, we may assess a civil penalty up to $32,500 for each engine in violation. For anyone else, we may assess a civil penalty up to $2,750 for each engine in violation. This prohibition does not apply in any of the following situations:

(i) You need to repair an engine and you restore it to proper functioning when the repair is complete.

(ii) You need to modify an engine to respond to a temporary emergency and you restore it to proper functioning as soon as possible.

(iii) You modify a new engine that another manufacturer has already certified to meet emission standards and recertify it under your own engine family. In this case you must tell the original manufacturer not to include the modified engines in the original engine family.

(2) Defeat devices. You may not knowingly manufacture, sell, offer to sell, or install, an engine part that bypasses, impairs, defeats, or disables the engine's control the emissions of any pollutant. We may assess a civil penalty up to$2,750 for each part in violation.

(3) Stationary engines. For an engine that is excluded from any requirements of this chapter because it is a stationary engine, you may not move it or install it in any mobile equipment, except as allowed by the provisions of this chapter. You may not circumvent or attempt to circumvent the residence-time requirements of paragraph (2)(iii) of the nonroad engine definition in §1068.30. We may assess a civil penalty up to $32,500 for each day you are in violation.

(4) Competition engines. For an uncertified engine or piece of equipment that is excluded or exempted from any requirements of this chapter because it is to be used solely for competition, you may not use it in a manner that is inconsistent with use solely for competition. We may assess a civil penalty up to $32,500 for each day you are in violation.

(5) Importation. You may not import an uncertified engine or piece of equipment if it is defined to be new in the standard-setting part and it is built after emission standards start to apply in the United States. We may assess a civil penalty up to $32,500 for each day you are in violation. Note the following:

(i) The definition of new is broad for imported engines; uncertified engines and equipment (including used engines and equipment) are generally considered to be new when imported.

(ii) Engines that were originally manufactured before applicable EPA standards were in effect are generally not subject to emission standards.

(6) Warranty. You must meet your obligation to honor your emission-related warranty under §1068.115 and to fulfill any applicable responsibilities to recall engines under §1068.505. Failure to meet these obligations is prohibited. We may assess a civil penalty up to $32,500 for each engine in violation.

* * * * *

264. Section 1068.105 is amended by revising paragraph (a) to read as follows:

§1068.105 What other provisions apply to me specifically if I manufacture equipment needing certified engines?

* * * * *

(a) Transitioning to new engine-based standards. If new emission standards apply in a given model year, your equipment in that model year must have engines that are certified to the new standards, except that you may use up your normal inventory of earlier engines that were built before the date of the new or changed standards. For example, if your normal inventory practice is to keep on hand a one-month supply of engines based on your upcoming production schedules, and a new tier of standard starts to apply for the 2015 model year, you may order engines based on your normal inventory requirements late in the engine manufacturer's 2014 model year and install those engines in your equipment, regardless of the date of installation. Also, if your model year starts before the end of the calendar year preceding new standards, you may use engines from the previous model year for those units you produce before January 1 of the year that new standards apply. If emission standards do not change in a given model year, you may continue to install engines from the previous model year without restriction. You may not circumvent the provisions of §1068.101(a)(1) by stockpiling engines that were built before new or changed standards take effect. Note that this allowance does not apply for equipment subject to equipment-based standards.

* * * * *

265. Section 1068.110 is amended by revising paragraph (e) to read as follows:

§1068.110 What other provisions apply to engines in service?

* * * * *

(e) Warranty and maintenance. Owners are responsible for properly maintaining their engines; however, owners may make warranty claims against the manufacturer for all expenses related to diagnosing and repairing or replacing emission-related parts, as described in §1068.115. The warranty period begins when the engine is first placed into service. See the standard-setting part for specific requirements. It is a violation of the Act for anyone to disable emission controls; see §1068.101(b)(1) and the standard-setting part.

266. Section 1068.115 is amended by revising paragraph (a) to read as follows:

§1068.115 When must manufacturers honor emission-related warranty claims?

* * * * *

(a) As a certifying manufacturer, you may deny warranty claims only for failures that have been caused by the owner's or operator's improper maintenance or use, by accidents for which you have no responsibility, or by acts of God. For example, you would not need to honor warranty claims for failures that have been directly caused by the operator's abuse of an engine or the operator's use of the engine in a manner for which it was not designed, and are not attributable to you in any way.

* * * * *

267. Section 1068.125 is amended by revising paragraph (b) introductory text to read as follows:

§1068.125 What happens if I violate the regulations?

* * * * *

(b) Administrative penalties. Instead of bringing a civil action, we may assess administrative penalties if the total is less than $270,000 against you individually. This maximum penalty may be greater if the Administrator and the Attorney General jointly determine that is appropriate for administrative penalty assessment, or if the limit is adjusted under 40 CFR part 19. No court may review such a determination. Before we assess an administrative penalty, you may ask for a hearing (subject to 40 CFR part 22). The Administrator may compromise or remit, with or without conditions, any administrative penalty that may be imposed under this section.

* * * * *

268. Section 1068.201 is amended by revising paragraph (i) to read as follows:

§1068.201 Does EPA exempt or exclude any engines from the prohibited acts?

* * * * *

(i) If you want to take an action with respect to an exempted or excluded engine that is prohibited by the exemption or exclusion, such as selling it, you need to certify the engine. We will issue a certificate of conformity if you send us an application for certification showing that you meet all the applicable requirements from the standard-setting part and pay the appropriate fee. Also, in some cases, we may allow manufacturers to modify the engine as needed to make it identical to engines already covered by a certificate. We would base such an approval on our review of any appropriate documentation. These engines must have emission control information labels that accurately describe their status.

269. Section 1068.240 is amended by revising paragraph (d) to read as follows:

§1068.240 What are the provisions for exempting new replacement engines?

* * * * *

(d) If the engine being replaced was certified to emission standards less stringent than those in effect when you produce the replacement engine, add a permanent label with your corporate name and trademark and the following language:

THIS ENGINE COMPLIES WITH U.S. EPA NONROAD EMISSION REQUIREMENTS FOR [APPLICABLE MODEL YEAR] ENGINES UNDER 40 CFR 1068.240. SELLING OR INSTALLING THIS ENGINE FOR ANY PURPOSE OTHER THAN TO REPLACE A NONROAD ENGINE BUILT BEFORE JANUARY 1, [Insert appropriate year reflecting when the next tier of emission standards began to apply] MAY BE A VIOLATION OF FEDERAL LAW SUBJECT TO CIVIL PENALTY.

* * * * *

270. Section 1068.245 is amended by revising paragraphs (a)(4) and (f)(4) to read as follows:

§1068.245 What temporary provisions address hardship due to unusual circumstances?

(a) * * *

(4) No other allowances are available under the regulations in this chapter to avoid the impending violation, including the provisions of §1068.250.

* * * * *

(f) * * *

(4) One of the following statements:

(i) If the engine does not meet any emission standards: "THIS ENGINE IS EXEMPT UNDER 40 CFR 1068.245 FROM EMISSION STANDARDS AND RELATED REQUIREMENTS.".

(ii) If the engine meets alternate emission standards as a condition of an exemption under this section: "THIS ENGINE COMPLIES WITH U.S. EPA NONROAD EMISSION REQUIREMENTS UNDER 40 CFR 1068.245.".

271. Section 1068.250 is amended by revising paragraph (f)(4) to read as follows:

§1068.250 What are the provisions for extending compliance deadlines for small-volume manufacturers under hardship?

* * * * *

(f) * * *

(4) One of the following statements:

(i) If the engine does not meet any emission standards: "THIS ENGINE IS EXEMPT UNDER 40 CFR 1068.250 FROM EMISSION STANDARDS AND RELATED REQUIREMENTS.".

(ii) If the engine meets alternate emission standards as a condition of an exemption under this section: "THIS ENGINE COMPLIES WITH U.S. EPA NONROAD EMISSION REQUIREMENTS UNDER 40 CFR 1068.250.".

272. Section 1068.255 is amended by revising paragraphs (a) introductory text and (b)(4) to read as follows:

§1068.255 What are the provisions for exempting engines for hardship for equipment manufacturers and secondary engine manufacturers?

(a) Equipment exemption. As an equipment manufacturer, you may ask for approval to produce exempted equipment for up to 12 months. We will generally limit this to the first year that new or revised emission standards apply. Send the Designated Officer a written request for an exemption before you are in violation. In your request, you must show you are not at fault for the impending violation and that you would face serious economic hardship if we do not grant the exemption. This exemption is not available under this paragraph (a) if you manufacture the engine you need for your own equipment or if complying engines are available from other engine manufacturers that could be used in your equipment, unless we allow it elsewhere in this chapter. We may impose other conditions, including provisions to use an engine meeting less stringent emission standards or to recover the lost environmental benefit. In determining whether to grant the exemptions, we will consider all relevant factors, including the following:

* * * * *

(b) * * *

(4) One of the following statements:

(i) If the engine does not meet any emission standards: "THIS ENGINE IS EXEMPT UNDER 40 CFR 1068.255 FROM EMISSION STANDARDS AND RELATED REQUIREMENTS.".

(ii) If the engine meets alternate emission standards as a condition of an exemption under this section: "THIS ENGINE COMPLIES WITH U.S. EPA NONROAD EMISSION REQUIREMENTS UNDER 40 CFR 1068.255.".

273. Section 1068.260 is amended by revising paragraphs (a)(4), (a)(6)(i), and (f) and adding paragraph (g) to read as follows:

§1068.260 What are the provisions for temporarily exempting engines for delegated final assembly?

* * * * *

(a) * * *

(4) Include the cost of all aftertreatment components (including shipping costs) in the cost of the engine.

* * * * *

(6) * * *

(i) Obtain annual affidavits from every equipment manufacturer to whom you sell engines under this section. Include engines that you sell through distributors or dealers. The affidavits must list the part numbers of the aftertreatment devices that equipment manufacturers install on each engine they purchase from you under this section.

* * * * *

(f) You are liable for the in-use compliance of any engine that is exempt under this section.

(g) It is a violation of the Act for any person to complete assembly of the exempted engine without complying fully with the installation instructions.

274. A new §1068.265 is added to subpart C to read as follows:

§1068.265 What provisions apply to engines that are conditionally exempted from certification?

Engines produced under an exemption for replacement engines (§1068.240) or for hardship (§1068.245, §1068.250, or §1068.255) may need to meet alternate emission standards as a condition of the exemption. The standard-setting part may similarly exempt engines from all certification requirements, or allow us to exempt engines from all certification requirements for certain cases, but require the engines to meet alternate standards. In these cases, all the following provisions apply:

(a) Your engines must meet the alternate standards we specify in (or pursuant to) the exemption section, and all other requirements applicable to engines that are subject to such standards.

(b) You need not apply for and receive a certificate for the exempt engines. However, you must comply with all the requirements and obligations that would apply to the engines if you had received a certificate of conformity for them, unless we specifically waive certain requirements.

(c) You must have emission data from test engines using the appropriate procedures that demonstrate compliance with the alternate standards, unless the engines are identical in all material respects to engines that you have previously certified to standards that are the same as, or more stringent than, the alternate standards.

(d) Unless we specify otherwise elsewhere in this part or in the standard-setting part, you must meet the labeling requirements in the standard-setting part, with the following exceptions:

(1) Instead of an engine family designation, use a modified designation to identify the group of engines that would otherwise be included in the same engine family.

(2) Instead of the compliance statement required in the standard-setting part, add the following statement: "THIS ENGINE MEETS U.S. EPA EMISSION STANDARDS UNDER 40 CFR 1068.265.".

(e) You may not generate emission credits for averaging, banking, or trading with engines meeting requirements under the provisions of this section.

(f) Keep records to show that you meet the alternate standards, as follows:

(1) If your exempted engines are identical to previously certified engines, keep your most recent application for certification for the certified engine family.

(2) If you previously certified a similar engine family, but have modified the exempted engine in a way that changes it from its previously certified configuration, keep your most recent application for certification for the certified engine family, a description of the relevant changes, and any test data or engineering evaluations that support your conclusions.

(3) If you have not previously certified a similar engine family, keep all the records we specify for the application for certification and any additional records the standard-setting part requires you to keep.

(g) We may require you to send us an annual report of the engines you produce under this section.

275. Section 1068.315 is amended by revising paragraphs (f)(2)(i) and (f)(2)(iii) to read as follows:

§1068.315 What are the permanent exemptions for imported engines?

(f) * * *

(2) * * *

(i) You have owned the engine for at least six months.

* * * * *

(iii) You use data or evidence sufficient to show that the engine is in a configuration that is identical to an engine the original manufacturer has certified to meet emission standards that apply at the time the manufacturer finished assembling or modifying the engine in question. If you modify the engine to make it identical, you must completely follow the original manufacturer's written instructions.

* * * * *

276. Section 1068.410 is amended by adding paragraph (j) to read as follows:

§1068.410 How must I select and prepare my engines?

* * * * *

(j) Retesting after reaching a fail decision. You may retest your engines once a fail decision for the audit has been reached based on the first test on each engine under §1068.420(c). You may test each engine up to a total of three times, but you must perform the same number of tests on each engine. You may further operate the engine to stabilize emission levels before testing, subject to the provisions of paragraph (f) of this section. We may approve retesting at other times if you send us a request with satisfactory justification.

277. Section 1068.510 is amended by revising paragraph (a)(10) and adding paragraph (f) to read as follows:

§1068.510 How does the recall program work?

(a) * * *

(10) If your employees or authorized warranty agents will not be doing the work, state who will and describe their qualifications.

* * * * *

(f) For purposes of recall, owner means someone who owns an engine affected by a remedial plan or someone who owns a piece of equipment that has one of these engines.

278. Remove §1068.540.