Process Dynamics /PD licensing, LLC

Linde Process Plants

IsoTherming Technology

Linde Process Plants and PD Licensing

- Diesel IsoTherming
  - Raw Distillate
  - Cat Cycle Oil
  - Coker Gas Oils
  - Blends
- Naphtha IsoTherming
  - Heavy Cat Naphtha
  - Coker Naphtha
- Cat Feed IsoTherming
  - Grassroots
  - Pretreat
  - Ultra Low Sulfur

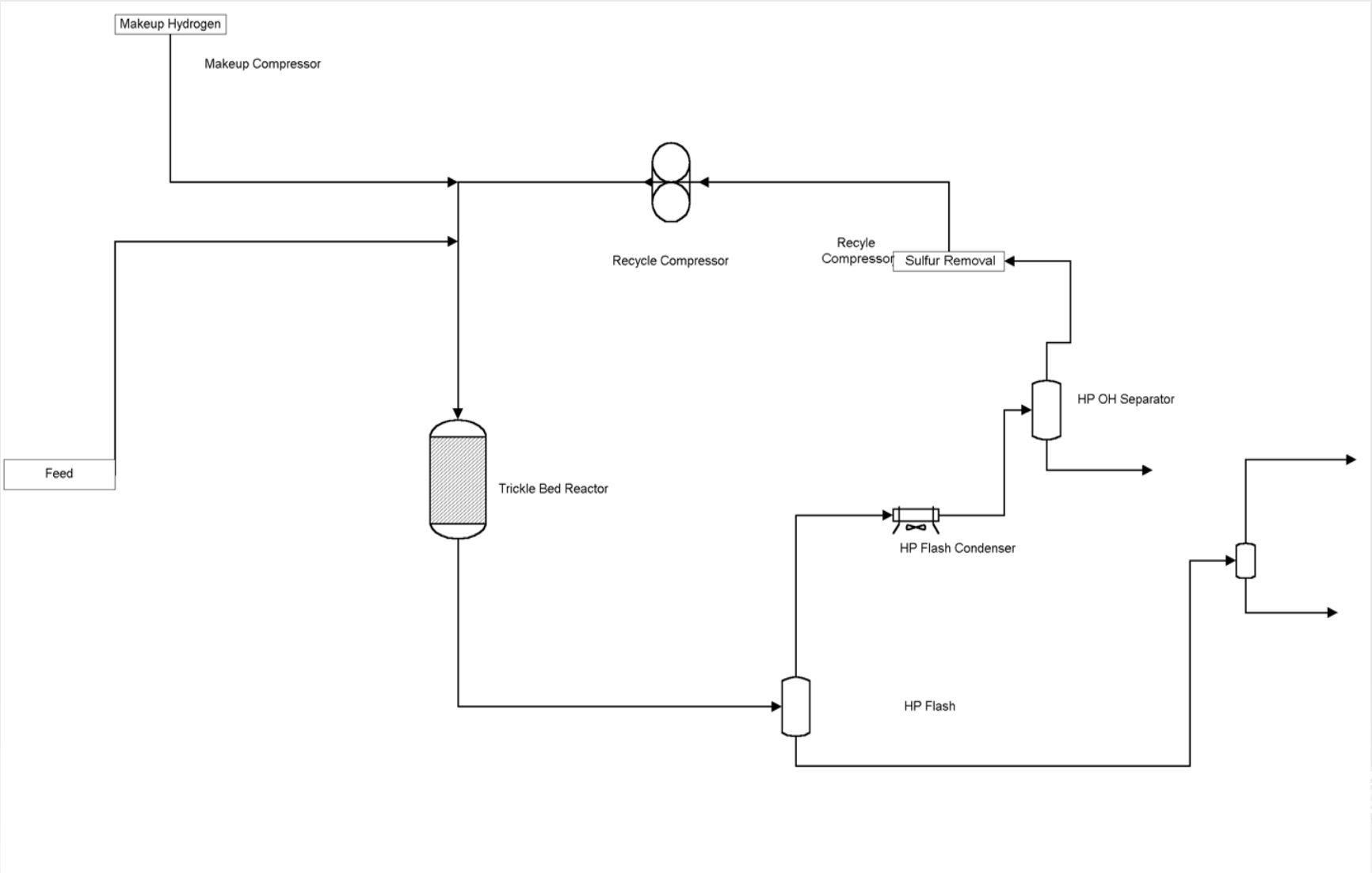

Conventional

Mass Transfer Limited

$r_s \propto \frac{k_l a}{H} (P_{H2} - P^*_{H2})$

fast reactions $P^*_{H2} \simeq 0$

$\frac{k_l a}{H}$ (L/G,T,)

$r_s \propto \frac{k_l a}{H} P_{H2}$

$r_{Ar} \propto \frac{k_l a}{H} P_{H2}$

$r_n \propto \frac{k_l a}{H} P_{H2}$

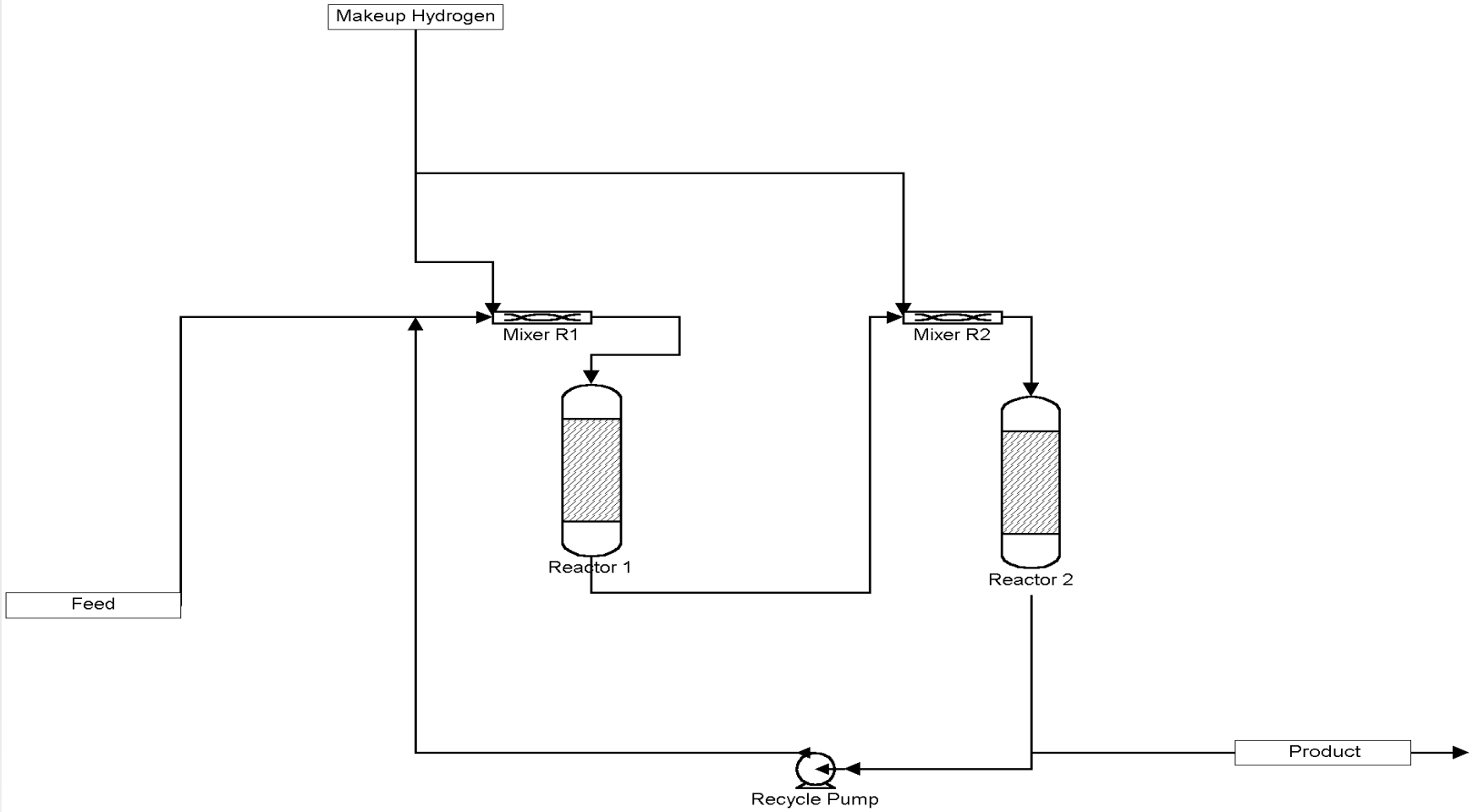

IsoTherming

Kinetic Limited

$r_s = k_s (T) [S] [H_2]$

$r_{Ar} = k_{Ar} (T) [A_r] [H_2]$

$r_n = k_n (T) [N] [H_2]^2$

$k (T) = A\exp (^{-E}/_{RT})$

Diesel IsoTherming

- Pre treat
- Post treat
- Grass Roots
- Unit Retrofit
- < 15 ppm, Ultra low sulfur diesel
- Low cost method to increase effective pressure of existing units

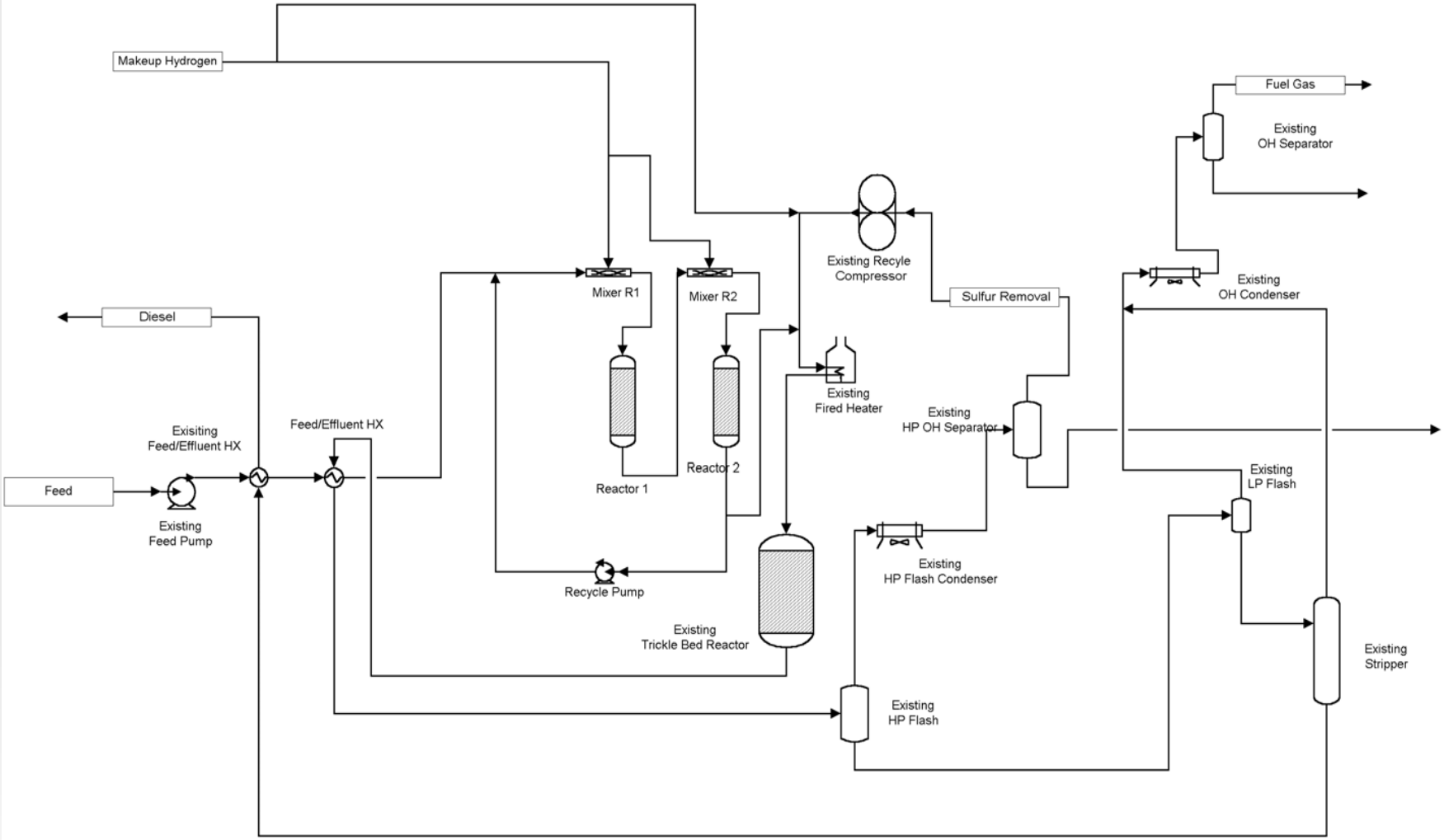

Diesel IsoTherming
Pretreat Configuration

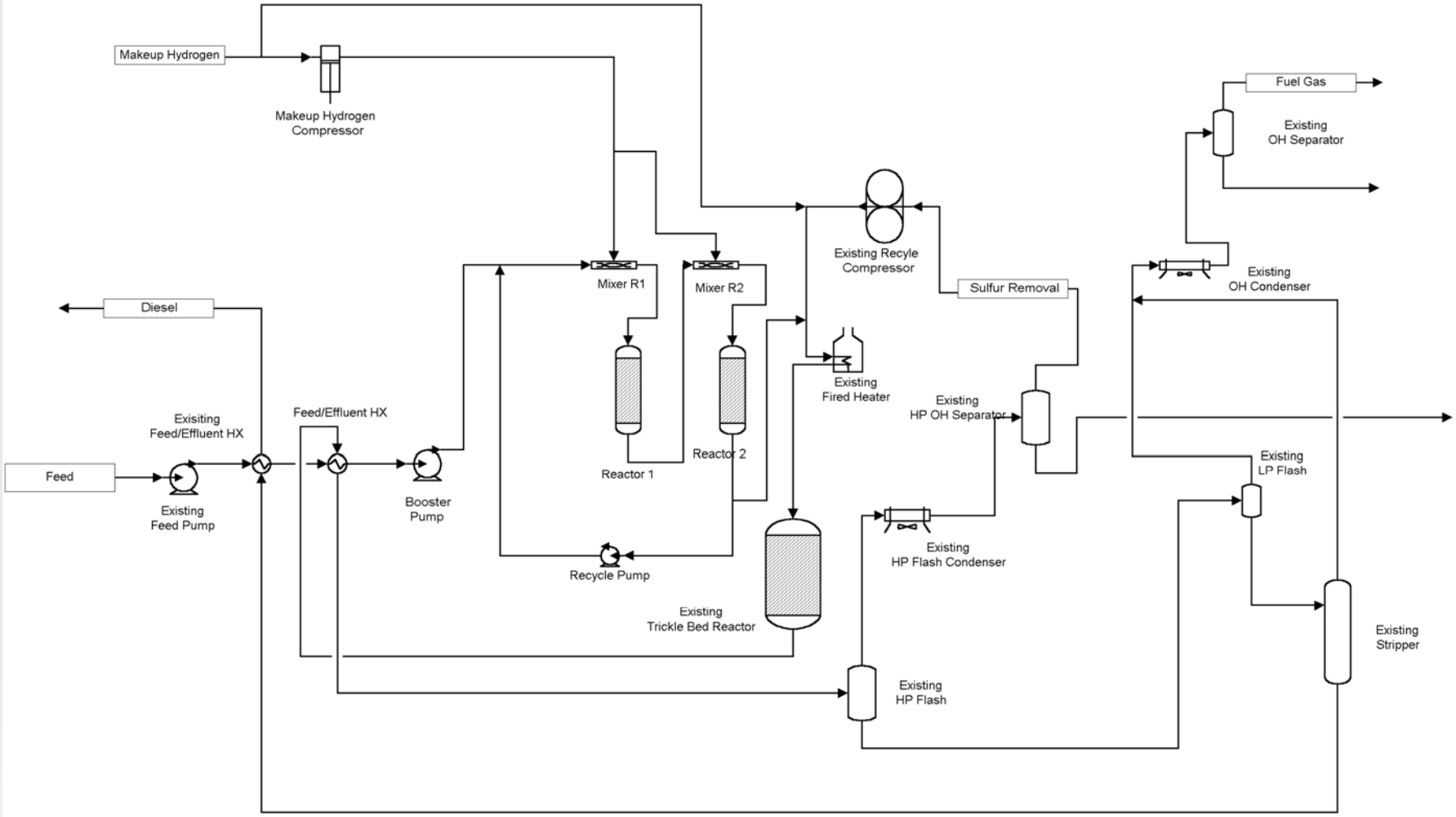

Diesel IsoTherming
Pretreat Configuration
Higher Pressure Pretreat System

Typical IsoTherming Results
Diesel Pretreat Configuration

	Feed	IsoTherming	Final Product
LCO, vol %	40		
SR, vol %	60		
Sulfur, ppm	1985	140	10
Nitrogen, ppm	388	24	3
API°	33.57	34.46	35.10
Cetane Index	46.50	47.80	48.60
H_2 consumption, SCF/BBL		230	40
Relative H_2 consumption		85	15
LHSV per Catalyst Bed, Hr^{-1}		10/10	3
Relative Catalyst Volume		60	100
Reactor Delta T		15	10
H_2 Partial Pressure, psig		600	600

Typical IsoTherming Results Diesel Pretreat Configuration

	Feed	IsoTherming Product	Final Product
LCO, vol %	30		
SR, vol %	60		
CGO, vol%	10		
Sulfur, ppm	9950	850	10
Nitrogen, ppm	340	38	2
API°	33.98	34.42	35.84
Cetane Index	44.5	48.5	50.8
H_2 consumption, SCF/BBL		320	100

Typical IsoTherming Results
Diesel , Cont.

	Feed	IsoTherming	Final Product
Relative H_2 consumption		75	25
LHSV per Catalyst Bed, Hr^{-1}		15/15	3
Relative Catalyst Volume		45	100
Reactor Delta T		15	15
H_2 Partial Pressure, psig		950	950

Typical IsoTherming Results
Diesel
High Pressure Pretreat System

	Feed	IsoTherming	Final Product
LCO, vol %	30		
SR, vol %	60		
CGO, vol%	10		
Sulfur, ppm	9950	220	5
Nitrogen, ppm	340	18	2
API°	33.98	36.12	37.25
Cetane Index	44.5	51. 2	52.8
H_2 consumption, SCF/BBL		430	80

Typical IsoTherming Results
Diesel, Con't.

	Feed	IsoTherming	Final Product
Relative H_2 consumption		85	15
LHSV per Catalyst Bed, Hr^{-1}		15/15	3
Relative Catalyst Volume		45	100
Reactor Delta T		15	15
H_2 Partial Pressure, psig		1500	950

Diesel IsoThermial Utility Cost
Pretreat Configuration

20,000 BBL/Day

		$/BBL
Electricity	**1525 kw**	**.011**
Natural Gas	**0 MMBTU/HR**	**0.00**
Incremental Hydrogen	**100 SCFB**	**0.30**
Total Incremental Utilities		**0.41**

Basis for Utility Cost

Electricity	**0.06 $/KWH**
Natural Gas	**2.50 $/MM**
H_2	**3.00 $/1000SSCF**

Diesel IsoTherming
First Commercial Project

- 4000 Barrels per Day
- Feed: 60 Percent Straight Run
  40 Percent LCO
- Start-up: September 3, 2002

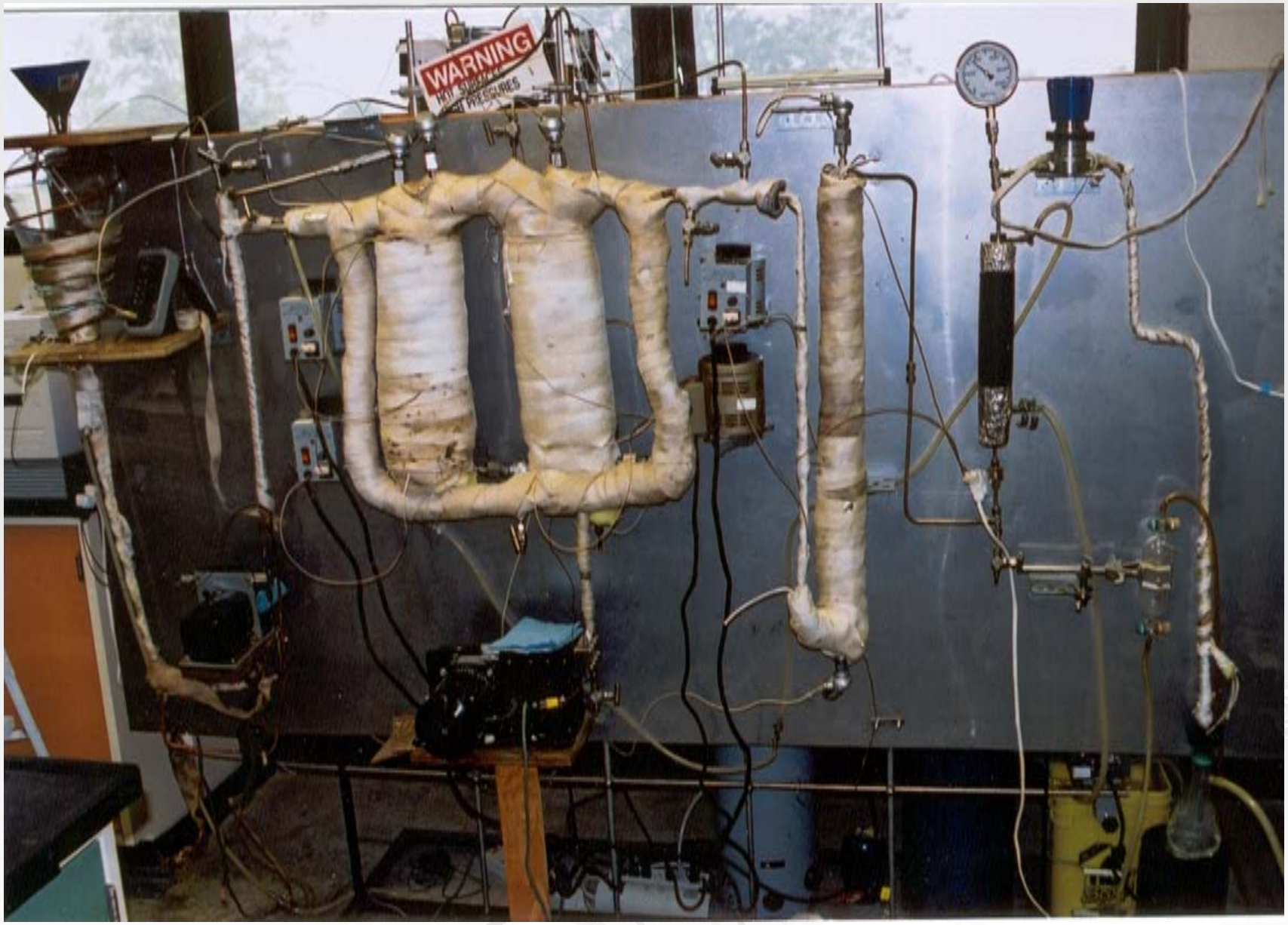
WARNING

1 TON
THINK
SAFETY
ARROW
TRUCKING

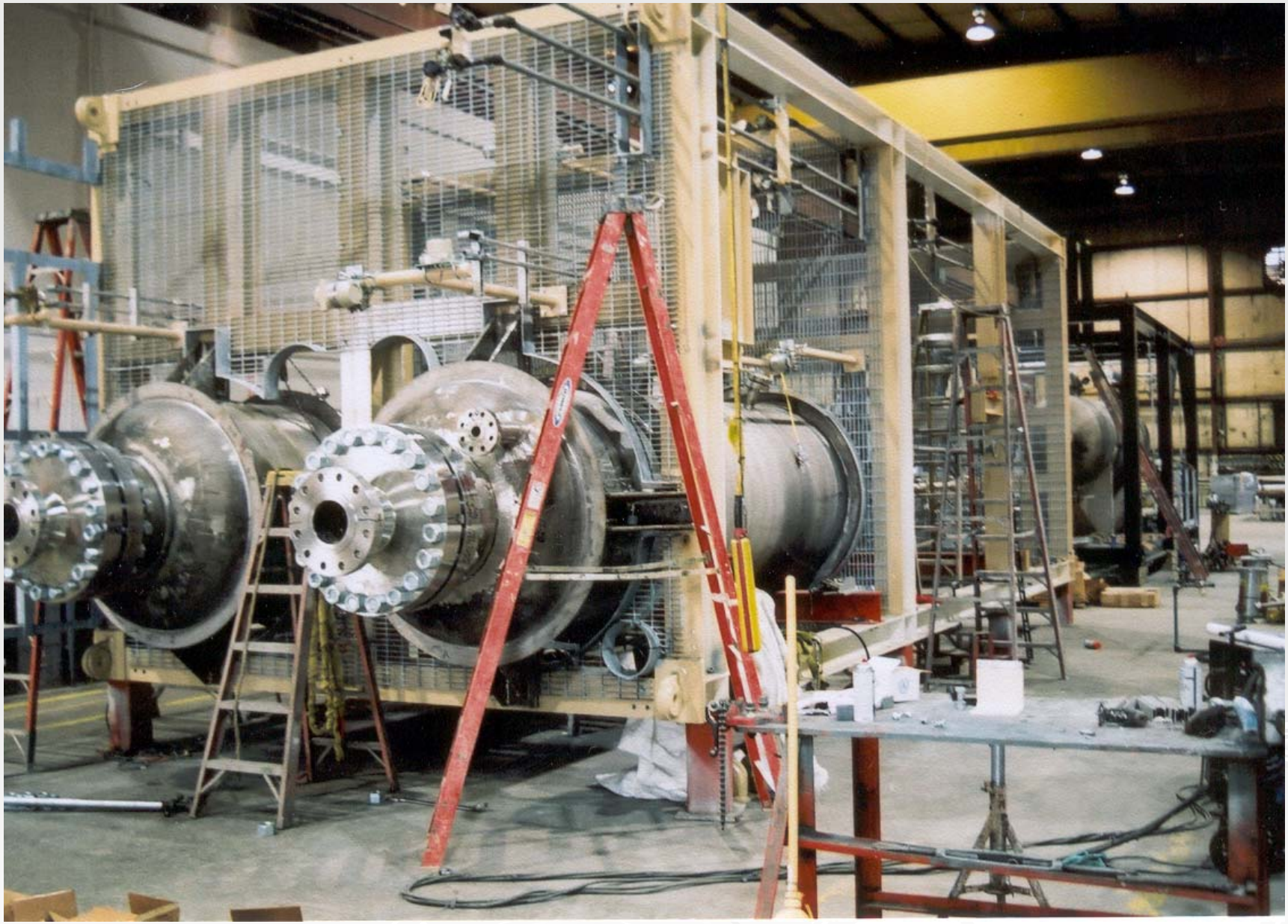

Heavy Cat Naphtha IsoTherming

- Heavy Cat Naphtha
- Coker Naphtha
- < 30 ppm sulfur cat & coker naphthas
- < 5 ppm nitrogen

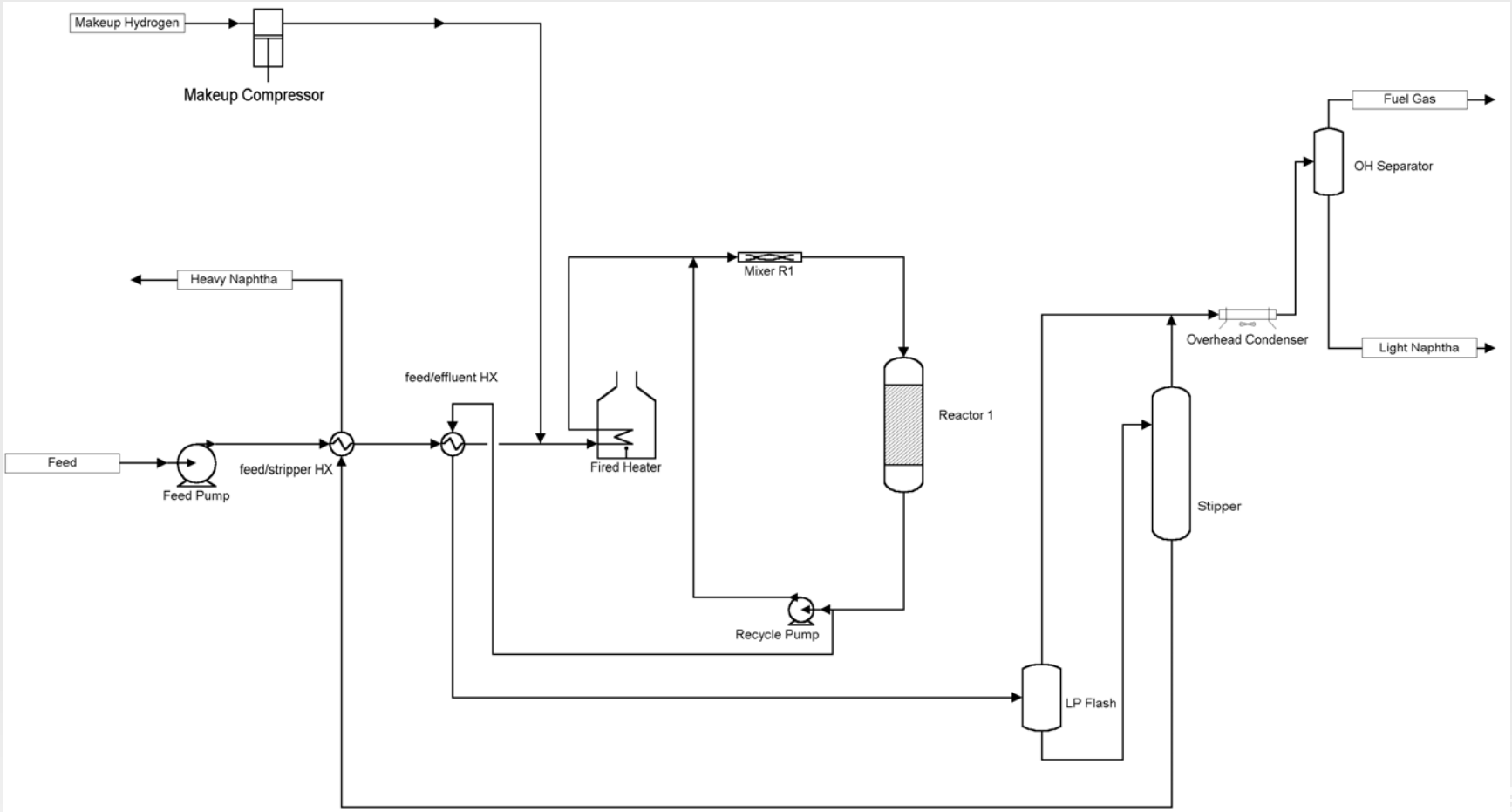

Heavy Cat and Coker Naphtha
IsoTherming
Grass Roots Configuration

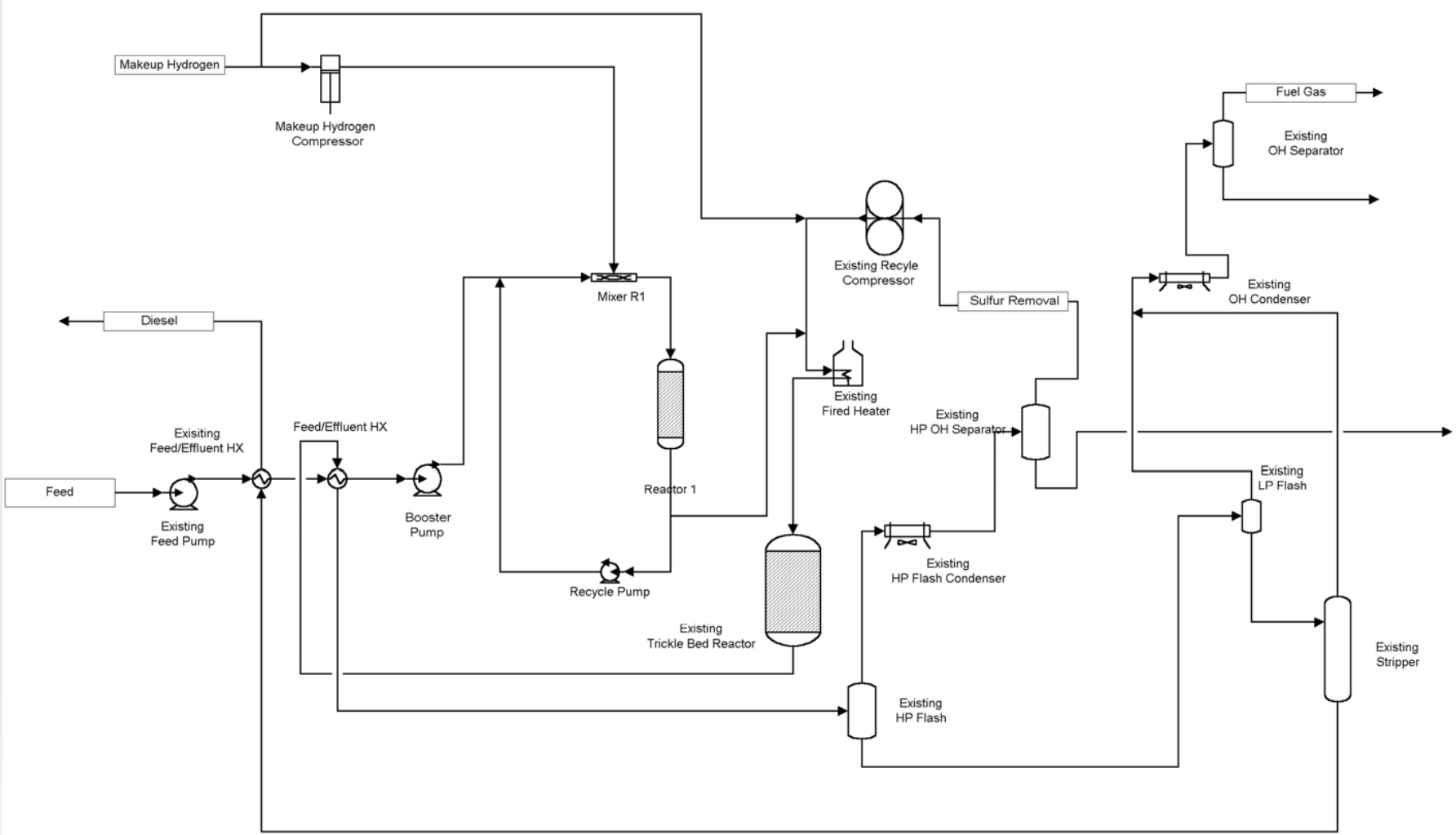

Heavy Cat and Coker Naphtha
IsoTherming
Pretreat Configuration

Typical IsoTherming Results Heavy Cat Naphtha

	Feed	IsoTherming	IsoTherming
Sulfur, ppm	5983	60	30
Nitrogen, ppm	63	18	1
H_2 Partial Pressure, psig		700	1100
H_2 consumption, SCF/BBL		100	150
LHSV, Hr^{-1}		10	15
Reactor Delta T		15	15

Heavy Cat Naphtha IsoTherming Utility Costs

20,000 BBL/Day

Utilities

		$/BBL
Electricity	1035 kW	0.07
Natural Gas	15 MMBTU/Hr	0.05
Hydrogen	150 SCFB	0.45
Total Utilities		0.57