DRAFT MATS ECMPS
Reporting Instructions
Emissions

United States Environmental Protection Agency
Office of Air and Radiation
Clean Air Markets Division
1310 L Street, NW
Washington, DC 20005

December 2013

Table of Contents

Page

1.0 INTRODUCTION: EMISSIONS 1
2.0 EMISSIONS 4
2.1 SUMMARY VALUE DATA 6
2.2 DAILY TEST SUMMARY DATA 12
2.2.1 DAILY CALIBRATION DATA 15
2.3 WEEKLY TEST SUMMARY DATA 23
2.3.1 WEEKLY SYSTEM INTEGRITY DATA 26
2.4 DAILY EMISSIONS DATA 28
2.4.1 DAILY FUEL DATA 30
2.5 HOURLY OPERATING DATA 31
2.5.1 MONITOR HOURLY VALUE DATA 38
2.5.1.1 MATS MONITOR HOURLY VALUE DATA 60
2.5.2 DERIVED HOURLY VALUE DATA 64
2.5.2.1 MATS DERIVED HOURLY VALUE DATA 84
2.5.3 HOURLY FUEL FLOW DATA 90
2.5.3.1 HOURLY PARAMETER FUEL FLOW DATA 97
2.5.4 HOURLY GFM DATA 104
2.6 LONG TERM FUEL FLOW DATA 108
2.7 SORBENT TRAP DATA 113
2.7.1 SAMPLING TRAIN DATA 118

List of Tables

Page

Table 1 Parameter Codes and Descriptions for SUMMARY VALUE DATA 8
Table 2 Precision of Reported Values for SUMMARY VALUE DATA..... 9
Table 3 Daily Test Result Code Descriptions..... 14
Table 4 Precision of Reported Values for DAILY CALIBRATION DATA 19
Table 5 PGVP Gas Type Codes and Descriptions..... 20
Table 6 Injection Protocol Codes and Descriptions..... 21
Table 7 Test Result Code Descriptions for Weekly System Integrity Checks 25
Table 8 Load Units of Measure Codes and Descriptions 34
Table 9 Fuel Codes and Descriptions 36
Table 10 MHV Elements for SO2C or Flow 39
Table 11 MHV Elements for NOXC Record (NOX Rate System Only) 40
Table 12 MHV Elements for NOXC Record (NOXC System)..... 41
Table 13 Summary of NO_x MONITOR HOURLY VALUE Record Reporting Requirements 42
Table 14 MHV Elements for CO2C 43
Table 15 MHV Elements for O2C..... 45
Table 16 MHV Elements for H2O..... 47
Table 17 Parameter Codes and Descriptions for the MHV DATA Record 48
Table 18 Precision of Reported Values for MONITOR HOURLY VALUE DATA..... 53
Table 19 MODC Codes and Descriptions for MHV 53
Table 20 Moisture Basis Codes and Descriptions for MHV 59
Table 21 MMHV Elements for HGC, HCLC and HFC 61
Table 22 Parameter Codes and Descriptions for the MMHV Data Record..... 61
Table 23 MODC Codes and Descriptions for MMHV 62
Table 24 Parameter Codes and Descriptions for the DHV DATA Record 72
Table 25 Precision of Reported Values for DERIVED HOURLY VALUE DATA..... 77
Table 26 MODC Codes and Descriptions for DHV 78
Table 27 System ID Reporting for Derived Hourly Values 80
Table 28 Operating Condition Codes and Descriptions for DHV 81
Table 29 Fuel Codes and Descriptions 82
Table 30 Parameter Codes and Descriptions for the MDHV Data Record 86
Table 31 MODC Codes and Descriptions for MDHV..... 88
Table 32 Oil Fuel Flow Fuel Codes and Descriptions..... 91
Table 33 Gas Fuel Flow Fuel Codes and Descriptions..... 92
Table 34 Volumetric Units of Measure Codes and Descriptions 94
Table 35 Source of Data Volumetric Codes and Descriptions 94
Table 36 Source of Data Mass Codes and Descriptions..... 96
Table 37 Parameter Codes and Descriptions for Hourly Parameter Fuel Flow..... 98
Table 38 Precision of Reported Values for Parameter Value for Fuel 99
Table 39 Sample Type Codes and Descriptions 100
Table 40 Operating Condition Codes and Descriptions for HOURLY PARAMETER FUEL FLOW 101
Table 41 Units of Measure Codes and Descriptions for HOURLY PARAMETER FUEL FLOW 103
Table 42 Sampling Rate Units of Measure Codes and Descriptions 106
Table 43 Long Term Fuel Flow UOM Code 111
Table 44 GCV Units of Measure Code..... 112

Table 45 MODC Codes for Sorbent Trap Data 117
Table 46 Sampling Ratio Check Result Codes and Descriptions 121
Table 47 Train QA Status Codes and Descriptions 122

List of Figures

Page

Figure 1 EMISSIONS XML SCHEMA COMPLEX Elements 3
Figure 2 Emissions XML Elements 4
Figure 3 Summary Value Data XML Elements 6
Figure 4 Daily Test Summary Data XML Elements 12
Figure 5 DAILY CALIBRATION DATA XML Elements 15
Figure 6 WEEKLY TEST SUMMARY DATA XML Elements 23
Figure 7 WEEKLY SYSTEM INTEGRITY DATA XML Elements 26
Figure 8 DAILY EMISSION DATA XML Elements 28
Figure 9 DAILY FUEL DATA XML Elements 30
Figure 10 HOURLY OPERATING DATA XML Elements 31
Figure 11 MONITOR HOURLY VALUE DATA XML Elements 38
Figure 12 MATS Monitor Hourly Value Data XML Elements 60
Figure 13 Derived Hourly Value Data XML Elements 68
Figure 14 MATS Derived Hourly Value Data XML Elements 84
Figure 15 Hourly Fuel Flow Data XML Elements 90
Figure 16 Hourly Parameter Fuel Flow Data XML Elements 97
Figure 17 Hourly GFM Data XML Elements 104
Figure 18 Long Term Fuel Flow Data XML Elements 108
Figure 19 Sorbent Trap Data XML Elements 113
Figure 20 Sampling Train Data XML Elements 118

ECMPS Reporting Instructions
Emissions

1.0 INTRODUCTION: EMISSIONS

About This Document

In the Emissions Collection and Monitoring Plan System (ECMPS), data must be submitted to the EPA through the Client Tool using extensible-markup language (XML) format. XML files must contain certain data elements, which are defined in the XML schema. (Note: More information about the ECMPS XML Schemas can be found in the XML Schema Description Documents.)

The purpose of the reporting instructions is to provide the necessary information for owners and operators to meet the reporting requirements for sources affected by:

1) The Acid Rain Program (ARP);
2) The Clean Air Interstate Rule (CAIR); and
3) Other programs required to report data using these XML schemas.

These instructions explain how to report the required data for the applicable regulations. Owners and operators of units should refer to the applicable regulations for information about what data are required to be reported.

The Emissions XML Schema is made up of a root element, complex elements, and simple elements. A simple element is a single piece of data. A complex element is a group of simple elements which are logically grouped together. The root element is the base of the XML schema.

The elements are related to each other in parent-child relationships. The root element is the parent element of the entire schema. Complex elements are children of the root element, and complex elements can also be children of other complex elements. If a complex element is dependent on a parent complex element, the child complex element cannot be included in the XML file unless the appropriate parent complex element is also included. Figure 1 below illustrates the relationships between the emissions root element and the complex elements.

This document provides instructions on how the required data should be reported using this data structure. A separate section is provided for each complex element, its dependencies, and its simple elements. In addition, there are "specific considerations" that apply to particular types of monitoring plan configurations.

About Emissions Data

Emissions data are hourly values for measured parameters, calculated hourly emissions values, instrument calibration data, and aggregated summary data. An emissions file contains one

calendar quarter of hourly and aggregate emissions measurements for a specified unit or group of related units, including stacks and pipes.

Each unit that is required to submit emissions data for a particular calendar quarter must be included in one and only one emissions file for that quarter. Each emissions file should contain all relevant operating, daily quality assurance, and emissions data for all units, common stacks, multiple stacks, or common pipes that were in a common monitoring configuration for any part of the quarter.

You must submit an emissions file for each quarter or, for ozone season only reporters, for the second and third calendar quarters of each year.

Rounding Conventions for Reporting Emissions Values

Each emissions value that is reported must be rounded to a specified precision (e.g., a certain number of decimal places or significant digits). The appropriate precision is based on the parameter, fuel type, and/or record type. Because some fields were designed to be generic and support reporting data for different parameters, it is not always appropriate to report values to the precision in the XML format. The appropriate precision for each parameter (and fuel type) can be found in the instructions under each record type.

Use the standard arithmetic rounding convention where numbers five through nine round to the next highest number in the previous decimal position to the left.

For example, when reporting SO2C, NOXC, CO2C, O2C, or H2O in the MONITOR HOURLY VALUE DATA (MHV) record, round these values to the nearest 0.1 ppm or 0.1 percent (as applicable). When reporting FLOW, the last significant digit in the reported flow rate values is in the thousands place; fill in zeros in the hundreds, tens, and unit columns (e.g., round 15,922,855 scfh to 15,923,000 scfh). When reporting NOXR in the DERIVED HOURLY VALUE DATA (DHV) record, round the NO_x emission rate to three decimal places.

Use of Rounded and Unrounded Values in Emissions Calculations

When performing calculations using any value that is reported in the XML, use the value as it is reported. In other words, use the rounded value in the calculation. However, any value that is calculated in an intermediate equation but is not reported should not be rounded before using it in a subsequent equation.

For example, to calculate the bias-adjusted SO_2 concentration, multiply the UnadjustedHourlyValue in the SO2C MHV record (which has been reported as a value rounded to one decimal place) by the bias adjustment factor (which has been reported in the RATA as a value rounded to three decimal places), and round the result to one decimal place before reporting this value as the AdjustedHourlyValue in the MHV record. To calculate the hourly SO_2 mass rate in lb/hr using formula F-1, use the AdjustedHourlyValue in the SO2C MHV record (which has been rounded to one decimal place) and AdjustedHourlyValue in the FLOW MHV record (which has been rounded to the nearest thousand) in the equation, and round the result to one decimal place before reporting this value as the AdjustedHourlyValue in the SO2 DHV record. When calculating quarterly SO_2 emissions in tons, first multiply the

AdjustedHourlyValue in the SO2 DHV record (which has been rounded to one decimal place) by the OperatingTime (which has been rounded to two decimal places) for every hour. Sum these unrounded products, then divide this unrounded sum by 2,000. Finally, round the result to one decimal place before reporting the quarterly emissions value in SUMMARY VALUE DATA record.

(Note: When the appropriate substitute data value for a particular parameter is the average of the values recorded in the hour before and the hour after the missing data period, you must round off the average value to the appropriate precision for the parameter.)

Figure 1
EMISSIONS XML SCHEMA COMPLEX Elements

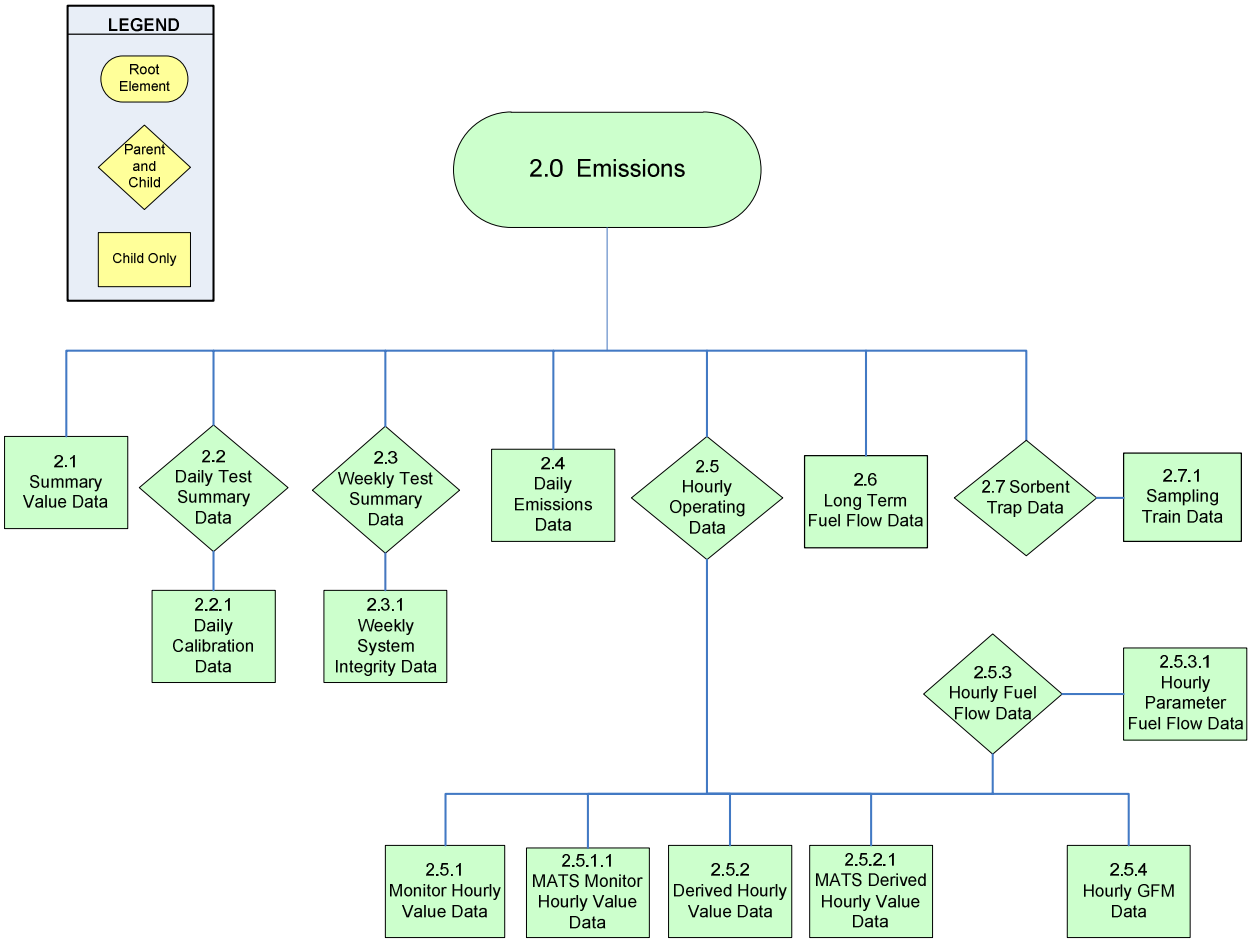

2.0 EMISSIONS

EMISSIONS XML Model

Figure 2
Emissions XML Elements

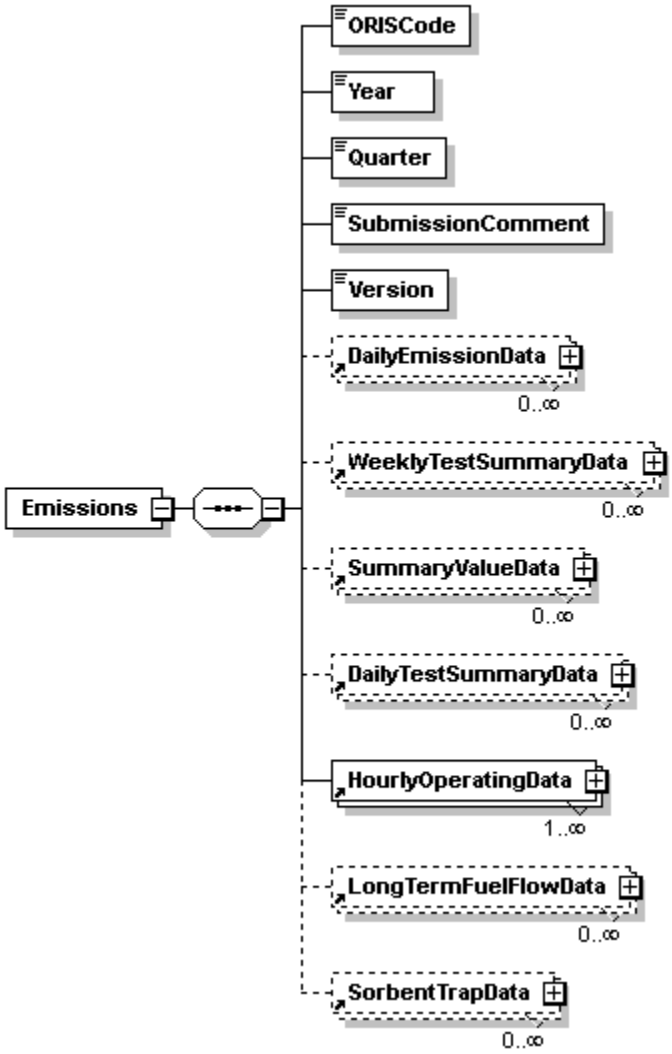

EMISSIONS Overview

Description of Data

The EMISSIONS record is the root element for the Emissions data XML schema. This element identifies the source for which emissions data are being reported. In addition, it provides information about the reporting period for which data are provided by identifying the year and quarter. Include a single EMISSIONS record in each Emissions data file.

EMISSIONS XML Elements

ORIS Code
Element Name: *ORISCode*

Report the code that indicates the unique identification number given to a source by the Energy Information Administration (EIA).

Year
Element Name: *Year*

Report the calendar year represented by the data in the file.

Quarter
Element Name: *Quarter*

Report the calendar quarter represented by the data in the file. Be sure that the reported year and quarter are properly matched to the time period of the emissions data.

Submission Comment
Element Name: *SubmissionComment*

This field can be used to report additional information or provide an explanation about an event that is specific to the quarterly report. Report the text of the comment in this field.

Version
Element Name: *Version*

Report the XML schema version number. Note that this is a numeric field -- do not include a "v" before the number.

2.1 SUMMARY VALUE DATA

SUMMARY VALUE DATA XML Model

Figure 3
Summary Value Data XML Elements

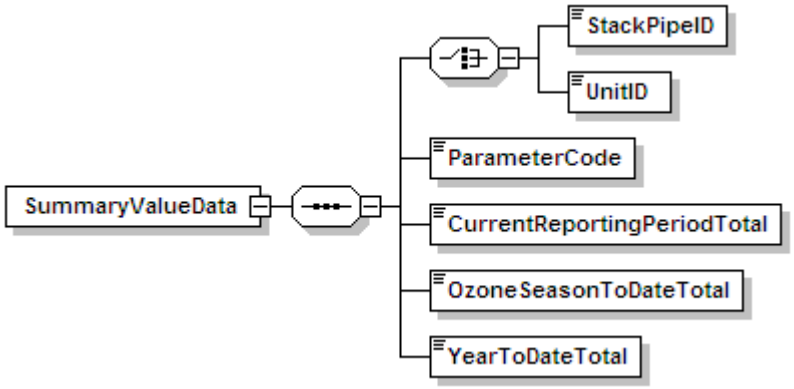

SUMMARY VALUE DATA Overview

Description of Data

The SUMMARY VALUE DATA records are used to report aggregated values for the parameters included in the emissions submission file and cumulative values for the year and/or ozone season. Summary values are reported by monitoring location and parameter on the basis of the current reporting period, year-to-date, and, if relevant, ozone season-to-date sums (or averages). For each monitoring location in the file, report a SUMMARY VALUE DATA record for operating time and another for operating hours. Also report a SUMMARY VALUE DATA record for each parameter measured or calculated at that location to meet a regulatory requirement. See Table 1 below for applicable parameters.

For units required to report heat input (HI), you must include for each unit a SUMMARY VALUE DATA record for HI whether the HI was actually measured at the unit level or apportioned (or summed) from another location or multiple locations.

<u>Common Stacks or Pipes</u>

The reporting period and cumulative heat input values for the stack or pipe (in mmBtu) must equal the sum of the HIs for the units associated with the stack or pipe. For the individual units, report SUMMARY VALUE DATA records only for HI, operating time, and operating hours. Do not apportion SO_2 mass emissions, CO_2 mass emissions, or average NO_x emission rates to the individual units.

Multiple Stacks or Pipes

For these configurations, report only the reporting period and cumulative HI, operating time, operating hours, and weighted average NO_x emission rates in the unit-level SUMMARY VALUE DATA records. Do not report quarterly and cumulative SO_2 or CO_2 mass emissions at the unit level. The reported quarterly or cumulative HI value for the unit must equal the sum of the corresponding HI values reported for the individual stacks, ducts, or pipes.

Complex Stack Configurations

A complex stack configuration exists where a unit's emissions are measured at more than one stack location and where at least one of these stack locations is a common stack shared with one or more other units.

For the purposes of quarterly and cumulative HI accounting, the sum of the HIs for all units associated with all stacks in a complex configuration must equal the sum of the stack HIs for all of the stacks. For example, if emissions from scrubbed Units 1, 2, and 3 are measured at CS1 during normal unit operation and are measured at CS2 during scrubber bypass hours, the sum of the HIs for Units 1, 2, and 3 must equal the sum of the HIs for CS1 and CS2.

See "Specific Considerations" below for information about how to calculate summary values.

SUMMARY VALUE DATA XML Elements

Unit ID or Stack Pipe ID
Element Name: *UnitID or StackPipeID*

Report either the Unit ID or Stack Pipe ID that corresponds to the summary data value location. This is the alphanumeric code assigned by a source to identify a unit, stack, or pipe.

Parameter Code
Element Name: *ParameterCode*

Report the Parameter Code for the parameter summarized by this SUMMARY VALUE DATA record. Use the appropriate uppercase code as shown in Table 1.

Table 1
Parameter Codes and Descriptions for SUMMARY VALUE DATA

Code	Description
BCO2	Biogenic CO_2 Mass (tons) This is only for RGGI affected units
CO2M	Carbon Dioxide Mass (tons)
HIT	Heat Input Total (mmBtu)
NOXM	Nitrogen Oxide Mass (tons)
NOXR	Nitrogen Oxide Rate (lb/mmBtu)
OPTIME	Operating Time (hr)
OPHOURS	Number of Operating Hours
SO2M	Sulfur Dioxide Mass (tons)

Current Reporting Period Total
Element Name: *CurrentReportingPeriodTotal*

Report the cumulative parameter value (i.e., emissions or time) as measured from the beginning of the current reporting period to the end of the current reporting period. This will generally be the quarterly total (or average), except for the second calendar quarter file for ozone season only reporters. For those files, this value is the total (or average) for just May and June. The value should be rounded to the number of decimal places according to Table 2. If there was no operation at this location during the reporting period, report zero.

Ozone Season to Date Total
Element Name: *OzoneSeasonToDateTotal*

For locations subject to ozone season only programs, report the cumulative parameter value (i.e., emissions or time) for the ozone season as follows: For a first quarter report, leave this field blank. For a second quarter report, report the sum parameter value (i.e., emissions or time) from the beginning of the ozone season (May 1) to the end of the reporting period. For a third quarter report, report the sum of the Ozone Season to Date Total value reported in the second quarter plus the quarterly value for the parameter reported for the third quarter. For a fourth quarter report, report the Ozone Season to date total from the third quarter report. All values should be rounded to the number of decimal places according to Table 2. If there was no operation at this location during the ozone season, report zero. For locations not subject to ozone season only programs, leave this field blank.

Year to Date Total
Element Name: *YearToDateTotal*

For locations that report year-round, report the cumulative sum of current year quarterly totals for each parameter value (i.e., emissions or time) as follows: For a first quarter report, report the sum parameter value (i.e., emissions or time) for the quarter. For subsequent quarters, report the

sum of the current reporting period plus the quarterly values for the parameter reported in the previous quarters. For example, the Year to Date total for quarter three would be calculated by summing the current quarter three reporting period value with the previously reported quarter one and quarter two values. The value should be rounded to the number of decimal places according to Table 2. If there was no operation at this location during the calendar year-to-date, report zero. For ozone season only reporters, leave this field blank.

Table 2
Precision of Reported Values for SUMMARY VALUE DATA

Parameter Codes	Number of Decimal Places
CO2M, NOXM, SO2M, BCO2	One
OPTIME	Two
NOXR	Three
HIT	Zero

Specific Considerations

Operating Time and Operating Hours

- Operating Time is the sum of the hourly OperatingTime in HOURLY OPERATING DATA records. Operating Hours is a count of HOURLY OPERATING DATA records with OperatingTime greater than zero.

SO2M, NOXM, HIT, and CO2M from Hourly Data

- For non-Low Mass Emissions (LME) locations, to calculate Reporting Period, Year to Date, and Ozone Season to Date totals for SO2M, and NOXM, multiply each hourly rate value reported in the DERIVED HOURLY VALUE record by the corresponding operating time in the HOURLY OPERATING record, sum those values, and then divide by 2,000. Round the resulting sum to the appropriate number of decimal places per Table 2. For CO2M, follow the same procedure but do not divide by 2,000.

- For LME units, to calculate Reporting Period, Year to Date, and Ozone Season to Date totals for SO2M, NOXM and HIT, sum the values in the DERIVED HOURLY VALUE records and divide by 2,000. Round the resulting sum to the appropriate number of decimal places per Table 2. For CO2M, follow the same procedure but do not divide by 2,000.

- If a common fuel pipe (or supply tank) serves a group of LME units and the long-term fuel flow option is used to quantify heat input, report the cumulative heat input for the group of units under the common pipe (or tank) ID. If more than one common pipe (or tank) serves the same group of LME units, report a separate SUMMARY VALUE DATA record for Total Heat Input (HIT) for each pipe (or tank).

CO2M from Daily Data

- If CO_2 mass is calculated on a daily basis and reported in the DAILY EMISSIONS DATA record, calculate Reporting Period, Year to Date, and Ozone Season to Date for CO2M by summing the values in these records. Round the resulting sum to the appropriate number of decimal places per Table 2.

NO_x Emission Rate

- For non-Acid Rain units, do not report a SUMMARY VALUE DATA record for NOXR, even if the NO_x emission rate is calculated on an hourly basis for the purpose of determining NO_x mass rate (lb/hr).

- For single unit or monitored common stack configurations, calculate each summary NO_x emission rate as a straight arithmetic average of the NO_x emission rates for all operating hours in the reporting period, ozone season, or year-to-date period, as reported in the DERIVED HOURLY VALUE DATA. If the recorded NO_x emission rate is zero, include these hours in the average only if the operating time for the hour is greater than zero.

- Do not weight the quarterly or cumulative average NO_x emission rate for partial operating hours (i.e., count all hourly NO_x emission rates equally, irrespective of the unit operating time). Report both the quarterly and cumulative average NO_x emission rates for the unit or stack to three decimal places.

- For simple multiple stack or multiple duct configurations in which NO_x emissions and heat input are monitored separately in each of the stacks or ducts, you must calculate and report the quarterly and cumulative arithmetic average NO_x emission rate for each stack or duct, and you must also calculate and report a quarterly and cumulative heat input-weighted NO_x emission rate for the unit. Determine the heat input-weighted averages for the unit as follows. First, use the reported hourly data (i.e., stack level NO_x emission and heat input rates) and the following formula to calculate a heat input-weighted unit NO_x emission rate for each stack operating hour in the quarter:

$$Hourly\ Unit\ NO_x\ Emission\ Rate\ (lb/mmBtu) = \frac{(NO_x\ Rate)_A (Heat\ Input)_A + (NO_x\ Rate)_B (Heat\ Input)_B}{(Heat\ Input)_A + (Heat\ Input)_B}$$

- In the formula above, the term "Heat Input" for multiple stack A or B is the product of the hourly HI rate for the stack and the corresponding operating time for the stack.

- When a multiple-stack configuration is selected for a combined-cycle combustion turbine (CT) that: (a) uses the provisions of Appendix D to Part 75 for unit HI; and (b) has a main stack and bypass stack configuration; and (c) has NO_x-diluent monitoring systems on both the main and bypass stacks, the mathematics are slightly different. In this case, for any unit operating hour in which gases flow through both stacks for any part of the hour, a time-weighted, rather than a heat-input-weighed unit-level NO_x emission rate is calculated, using an equation similar to the one above, except that the terms "(Heat Input)A" and "(Heat Input)B" are replaced with tA and tB, respectively, where tA and tB

are the main stack operating time and bypass stack operating time, respectively. The time-weighted hourly average NO_x emission rates are then used to determine the quarterly and cumulative NO_x emission rates for the unit.

- The quarterly heat input-weighted average NO_x emission rate for the unit is then determined by taking the sum of all of the hourly heat input-weighted NO_x emission rates for the quarter and dividing this sum by the total number of unit operating hours in the quarter. In determining the number of unit operating hours in the quarter, each partial operating hour is counted as a full hour of unit operation. The cumulative heat input-weighted average NO_x emission rate for the unit is determined in the same way as the quarterly average for the unit, except that the terms "for the quarter" and "in the quarter" are replaced, respectively, with the terms, "for the year, to date" and "in the year, to date."

- For Acid Rain Program (ARP) LME units, determine the quarterly average NO_x emission rate for each unit as follows: Sum all of the hourly NO_x mass values from the DERIVED HOURLY VALUE records for NO_x to get the total NO_x mass for the quarter. Then, sum the hourly HI values from the DERIVED HOURLY VALUE records for HI to obtain the HIT for the quarter. Divide the total NO_x mass for the quarter by the total quarterly HI, to determine the quarterly NO_x emission rate in lb/mmBtu. Calculate the cumulative (year-to-date) NO_x emission rate by separately summing the hourly NO_x mass and HI values over all operating hours in all quarters, and then dividing the NO_x mass sum by the HI sum.

2.2 DAILY TEST SUMMARY DATA

DAILY TEST SUMMARY DATA XML Model

Figure 4
Daily Test Summary Data XML Elements

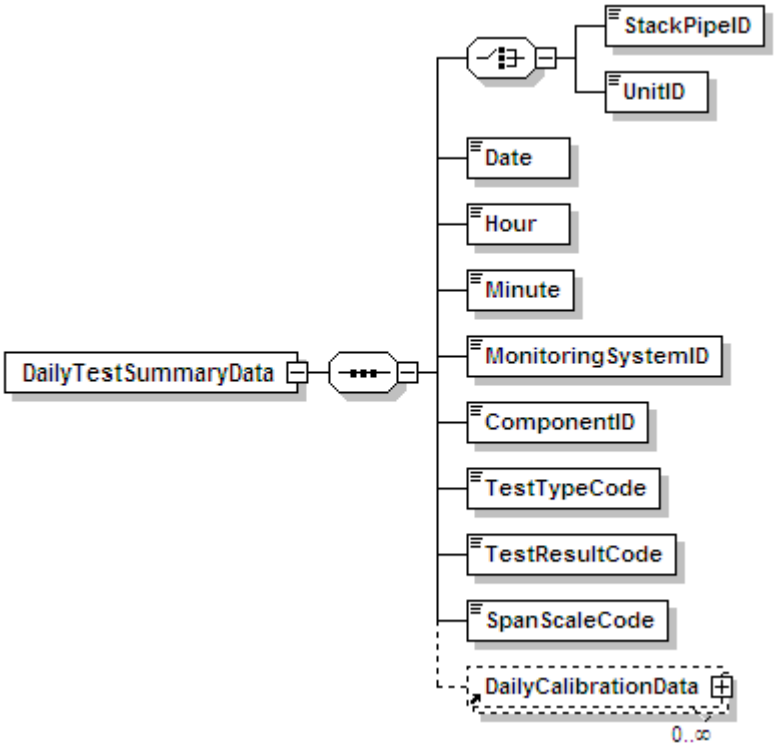

DAILY TEST SUMMARY DATA Overview

Description of Data

The DAILY TEST SUMMARY DATA record summarizes the completion date and time and the results (Passed/Failed/Aborted) for each daily calibration error test and flow interference check. For each calibration error test, report the calibration test data in the DAILY CALIBRATION DATA record (see instructions for that record below.) Also use the DAILY TEST SUMMARY DATA record to report the results of the daily Predictive Emissions Monitoring System (PEMS) calibration for units with an approved PEMS monitoring method.

Report the results of all failed, passing, and incomplete calibrations that affect data validation. For redundant backup monitors, the results of daily calibration error tests need not be reported except on days when using the monitors to report emissions data.

Do <u>not</u> report the results of off-line calibrations performed during periods of non-operation of the unit or stack unless the unit has passed the off-line calibration demonstration and is using off-line calibrations to validate data.

DAILY TEST SUMMARY DATA XML Elements

Unit ID or Stack Pipe ID
Element Name: *UnitID or StackPipeID*

Report either the Unit ID or Stack Pipe ID for the daily test location. This is the alphanumeric code assigned by a source to identify a unit or stack.

Date
Element Name: *Date*

For daily calibrations, report the date corresponding to the completion of the last gas injection of the test. For interference checks, report the date on which the test was completed.

Hour
Element Name: *Hour*

For daily calibrations, report the hour corresponding to the completion of the last gas injection of the test. For interference checks, report the hour in which the test was completed.

Minute
Element Name: *Minute*

For daily calibrations, report the minute corresponding to the completion of the last gas injection of the test. For interference checks, report the minute in which the test was completed.

Monitoring System ID
Element Name: *MonitoringSystemID*

If this is a PEMS Calibration test, report the three-character Monitoring System ID for the NOXP system. Leave this field blank for other parameters.

Component ID
Element Name: *ComponentID*

Report the three-character ID assigned to the component. Leave this field blank for PEMSCAL.

Test Type Code
Element Name: *TestTypeCode*

Report the test type code as DAYCAL for a daily calibration test summary record, or as INTCHK for an interference check. For units with an approved PEMS methodology, report the test type code as PEMSCAL for daily PEMS calibration tests.

Test Result Code
Element Name: *TestResultCode*

Report the test result code as PASSED, PASSAPS, FAILED, INC, or ABORTED. See detailed descriptions of each code in Table 3.

Table 3
Daily Test Result Code Descriptions

Code	Description
PASSED	Report this code whenever the standard performance specification is met for the test. For daily calibration error tests, report the test as passed only if the zero and upscale-level calibration error test injections each pass the standard performance specification in sequence. Partial calibrations, where only one injection level is completed and passes the performance specification, may not be reported as "PASSED." Rather, these may either be omitted from the electronic report or reported as "INC."
PASSAPS	This code applies to daily calibration tests only. Report this code whenever the standard performance specification is not met for one or both injections, but the alternative performance specification (as described in Part 75, Appendix B, Section 2.1.4(a) or in Appendix A to 40 CFR Part 63, Subpart UUUUU (as applicable)) is met for whichever injections did not meet the standard specification.
FAILED	Report this code whenever the applicable performance specification is not met for the test. For daily calibration error tests, report the test as failed whenever either the zero-level calibration error test or upscale-level calibration error test (or both) cannot meet either the applicable standard or alternative performance specification. Partial calibrations, where only one injection level is completed and failed, must be reported as "FAILED." Data for the systems associated with the specified component will be considered invalid until a subsequent retest is passed.
INC	Report this code whenever a calibration error test is not completed at both required calibration levels and the completed calibration injection passes the applicable performance specification tests. Incomplete tests have no affect on data validation and do not satisfy the daily calibration requirements of Part 75 or Part 63, Subpart UUUUU.
ABORTED	Report this code whenever a test is aborted due to a malfunction of the monitoring system. Data for the systems associated with the specified component will be considered invalid until a subsequent retest is passed.

Span Scale Code
Element Name: *SpanScaleCode*

For Daily Calibration tests, report whether the component or the range of the instrument tested is high (H) or low (L) scale (If the component is a single range and no default high range is in use, enter "H"). Report a span scale of high (H) for Hg monitor components. Do not report a span scale code for flow monitor components.

2.2.1 Daily Calibration Data

Daily Calibration Data XML Model

Figure 5
Daily Calibration Data XML Elements

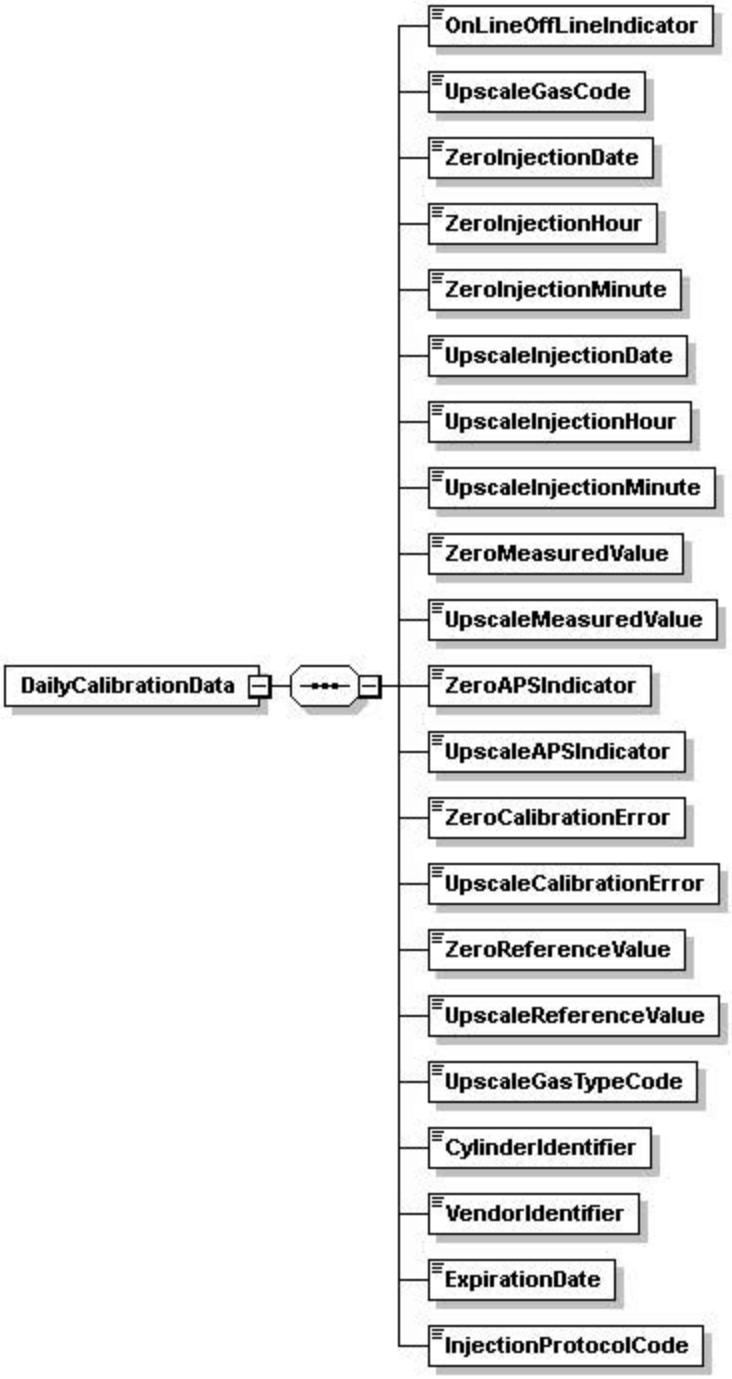

DAILY CALIBRATION DATA Overview

Description of Data

The DAILY CALIBRATION DATA record is used to report the details of each daily calibration error test sequence completed. You must report a DAILY CALIBRATION DATA record for each calibration error test performed that affects data validation. A complete DAILY CALIBRATION DATA record should contain data for both the zero and upscale calibration point.

Partial calibration error tests (where the tested level passes the applicable specification) do not satisfy the daily calibration error requirements and are not required to be reported since they have no effect on data validation. If such calibrations are included in the emissions report, then report the result as "INC" in the DAILY TEST SUMMARY DATA record. Partial calibration error tests where the tested level fails to meet the applicable specification must be reported as a "FAILED" test. You are not required to report additional failed calibration tests for a component when the data from that component is already considered invalid due to a previously failed calibration error test. However, please note that tests reported as "FAILED" should be reported with all the necessary fields completed. Daily calibration error tests conducted with expired gas cylinders, gas cylinders obtained from a vendor not participating in the PGVP program, or gas cylinders containing concentrations outside the required percentage of Monitor Span Value record are considered invalid and should not be reported.

For more information concerning this record regarding moisture monitoring systems, flow monitors, maintenance procedures, or dual range analyzers, see the "Specific Considerations" section below.

DAILY CALIBRATION DATA XML Elements

Instructions for completing each element of the HOURLY SUBMISSION COMMENT DATA section are provided below:

OnLine OffLine Indicator
Element Name: *OnLineOffLineIndicator*

Indicate whether this daily calibration was performed online (report "1") or offline (report "0"). For Hg CEMS, all calibrations must be done online.

Upscale Gas Code
Element Name: *UpscaleGasCode*

Indicate whether the gas used for the upscale injection is high-level or mid-level by reporting the appropriate code (HIGH or MID). Mid-level gas injections may be performed and reported in lieu of the high-level injections, provided that the mid-level (MID) gas is more representative of the actual stack emissions. If the daily calibration was not completed and there was no upscale-level injection, leave this field blank.

Zero Injection Date
Element Name: *ZeroInjectionDate*

Report the date of the completion of the zero gas injection. If the daily calibration was not completed and there was no zero-level injection, leave this field blank.

Zero Injection Hour
Element Name: *ZeroInjectionHour*

Report the hour of the completion of the zero gas injection. If the daily calibration was not completed and there was no zero-level injection, leave this field blank.

Zero Injection Minute
Element Name: *ZeroInjectionMinute*

Report the minute of the completion of the zero gas injection. If the daily calibration was not completed and there was no zero-level injection, leave this field blank.

Upscale Injection Date
Element Name: *UpscaleInjectionDate*

Report the date of the completion of the upscale gas injection. If the daily calibration was not completed and there was no upscale-level injection, leave this field blank.

Upscale Injection Hour
Element Name: *UpscaleInjectionHour*

Report the hour of the completion of the gas injection. If the daily calibration was not completed and there was no upscale-level injection, leave this field blank

Upscale Injection Minute
Element Name: *UpscaleInjectionMinute*

Report the minute of the completion of the upscale gas injection. If the daily calibration was not completed and there was no upscale-level injection, leave this field blank.

Zero Measured Value
Element Name: *ZeroMeasuredValue*

Report the value measured by the instrument in response to the reference following the gas injection or reference signal. Report this value in calibration span units of measure. For all monitors except flow, the units (and decimal precision) should match the hourly reporting. For example, for SO_2, report concentration in ppm and round the resulting value to the appropriate number of decimal places in Table 4. For flow, use the calibration units of measure defined in the MONITOR SPAN VALUE record and round the resulting value to the appropriate number of decimal places per Table 4.

If the daily calibration was not completed and there was no zero-level injection, leave this field blank.

Upscale Measured Value
Element Name: *UpscaleMeasuredValue*

Report the value measured by the instrument in response to the reference following the gas injection or reference signal. Report this value in calibration span units of measure. For all monitors except flow, the units (and decimal precision) should match the hourly reporting. For example, for SO_2, report concentration in ppm and round the resulting value to the appropriate number of decimal places per Table 4. For flow, use the calibration units of measure defined in the MONITOR SPAN VALUE record and round the resulting value to the appropriate number of decimal places per Table 4.

If the daily calibration was not completed and there was no upscale-level injection, leave this field blank.

Zero APS Indicator
Element Name: *ZeroAPSIndicator*

If the zero injection result is determined using a standard calibration error (CE) specification, report "0". If the alternative performance specification is used, report "1", as allowed under Part 75 or (for Hg,) under ~~Appendix A to~~ 40 CFR Part 63, Subpart UUUUU. If the daily calibration is not completed and there was no zero level injection, leave this field blank.

Upscale APS Indicator
Element Name: *UpscaleAPSIndicator*

If the upscale injection result is determined using a standard CE specification, report "0". If the alternative performance specification is used, report "1", as allowed under Part 75 or (for Hg) under ~~Appendix A to~~ 40 CFR Part 63, Subpart UUUUU. If the daily calibration was not completed and there was no upscale-level injection, leave this field blank.

Zero Calibration Error
Element Name: *ZeroCalibrationError*

Report the calibration error results of the zero-level injection, as required by Part 75 or (for Hg) according to ~~Appendix A to~~ 40 CFR Part 63, Subpart UUUUU (see the Upscale Calibration Error element description for further instructions). If the daily calibration was not completed and there was no zero-level injection, leave this field blank.

Upscale Calibration Error
Element Name: *UpscaleCalibrationError*

Report the calibration error results of the upscale injection, as required by Part 75 or (for Hg) according to ~~Appendix A to~~ 40 CFR Part 63, Subpart UUUUU. For SO_2, Hg , NO_x, and flow monitors, express the results either as a percentage of the span value or (for low-emitters of SO_2, Hg, or NO_x, or for low-span differential pressure-type flow monitors) as the absolute value of the

difference between the reference and measured values (i.e., |R - A|). For CO_2 and O_2 monitors, the results are always determined using |R - A| and are expressed in terms of absolute percent CO_2 or O_2. Use this method for all diluent gas monitors used for CO_2 reporting and/or NO_x reporting and/or Hg reporting. For all parameters, except for low-span differential pressure-type flow monitors using the alternative specification, report the calibration error (or |R - A|) to one decimal place. When a low-span differential pressure-type flow monitor uses the alternative specification because the standard specification was not met, the |R - A| value must be reported to two decimal places. If the daily calibration was not completed and there was no upscale-level injection, leave this field blank.

If the calculated calibration error meets the standard performance specification, report the result as a percentage of the span value even though the result would also pass the alternative specification. Only when the result does not pass the standard specification, but meets the alternative specification, should |R - A| be reported. If the test does not pass either specification, report the calibration error as a percentage of the span value.

Zero Reference Value
Element Name: *ZeroReferenceValue*

Report the calibration gas or reference signal value used in this injection. Report the certified value of the reference calibration gas, in ppm for SO_2 and NO_x, in µg/scm for Hg, or in $\%CO_2$ or $\%O_2$ for CO_2 and O_2. Report the value of the reference signal in the appropriate units, for flow monitors. Report the value to the precision defined in Table 4. If the daily calibration was not completed and there was no zero-level injection, leave this field blank.

Upscale Reference Value
Element Name: *UpscaleReferenceValue*

Report the calibration gas or reference signal value used in this injection. Report the certified value of the reference calibration gas, in ppm for $SO_2$and NO_x, in µg/scm for Hg, or in $\%CO_2$ or $\%O_2$ for CO_2 and O_2. Report the value of the reference signal in the appropriate units for flow monitors. Report the value to the precision defined in Table 4. If the daily calibration was not completed and there was no upscale-level injection, leave this field blank.

Table 4
Precision of Reported Values for DAILY CALIBRATION DATA

Parameter Codes	Required Precision
CO2, H2O, NOX, O2, SO2, HG	One Decimal Place
FLOW	Same as Calibration Span Value

Upscale Gas Type Code
Element Name: *UpscaleGasTypeCode*

For SO2, NOX, CO2, and O2 components, report one or more of the gas type codes in Table 5 to indicate the type of gas in the cylinder used for the upscale injection. Note: If you use a component that is not present in this table, you may report a value of "APPVD", but you will need to contact EPA before submitting the data in order to get permission to use this code. Leave this field blank if the Component Type Code is FLOW, Hg, or H2O.

Table 5
PGVP Gas Type Codes and Descriptions

Code	Description
SO2	EPA Protocol Certified Gas Component SO_2
NO	EPA Protocol Certified Gas Component NO
NO2	EPA Protocol Certified Gas Component NO2
NOX	EPA Protocol Certified Gas Component Total Oxides of Nitrogen
N2O	EPA Protocol Certified Gas Component Nitrous Oxide
CO2	EPA Protocol Certified Gas Component CO_2
CO	EPA Protocol Certified Gas Component CO
O2	EPA Protocol Certified Gas Component O_2
PPN	EPA Protocol Certified Gas Component Propane
CH4	EPA Protocol Certified Gas Component Methane
HE	EPA Protocol Certified Gas Component Helium
H2S	EPA Protocol Certified Gas Component Hydrogen Sulfide
BALA	Balance Gas is Air
BALN	Balance Gas is Nitrogen
APPVD	Other EPA-approved EPA Protocol gas blend (see note below). Do not report certified components when using this code.
AIR	Zero Air Material (instrument air with no cylinder and meeting the requirements of paragraphs (2) or (3) of the ZAM definition in § 72.2). This code is reported only when it is used as a high-level O2 gas for an oxygen analyzer. Do not report AIR when used to zero an analyzer. Do not report certified components when using this code.
SRM	Standard reference material. Do not report certified components when using this code.
NTRM	NIST-traceable reference material. Do not report certified components when using this code.
GMIS	Gas manufacturer's intermediate standard. Do not report certified components when using this code.
RGM	Research gas mixture. Do not report certified components when using this code.
PRM	SRM-equivalent compressed gas primary reference material. Do not report certified components when using this code.
ZERO	Zero gas (meeting the definition of "Zero Air Material" in §72.2) used for the low level calibration of a reference analyzer used in RATA testing. Do not report certified components when using this code.

Note: If you use a gas component or material that is not present in this table, you may report a value of "APPVD", but you will need to your EPA/CAMD/EMB analyst before submitting the data in order to get permission to use this code.

Cylinder Identifier
Element Name: *CylinderIdentifier*

For SO2, NOX, CO2, and O2 components, report the vendor-assigned identification or serial number found on the cylinder used for the upscale injection. Leave this field blank if the Component Type Code is FLOW or H2O.

Vendor Identifier
Element Name: *VendorIdentifier*

For an EPA Protocol gas, report the EPA-assigned PGVP Vendor ID of the production site that supplied the cylinder used for the upscale injection. PGVP Vendor IDs are year specific, therefore report the assigned PGVP Vendor ID that is applicable on the date the cylinder is certified. An up-to-date list of PGVP Vendor IDs will be located on the EPA website, and can be accessed via the ECMPS Support website. Report "NONPGVP" if the cylinder was purchased from a non-participating vendor prior to 60 days after the rule is published in the FR. Leave this field blank if the Component Type Code is FLOW or H2O or if the Gas Type Code is AIR, SRM, NTRM, GMIS, RGM, or PRM.

Expiration Date
Element Name: *Expiration Date*

For an EPA Protocol gas, SRM, NTRM, GMIS, RGM, or PRM, report the expiration date of the cylinder used for the upscale injection. Leave this field blank if the Component Type Code is FLOW or H2O or if the Gas Type Code is AIR.

Injection Protocol
Element Name: *Injection Protocol*

Report the code to indicate the use of either elemental or oxidized NIST-traceable Hg standards.

Table 6
Injection Protocol Codes and Descriptions

Code	Description
HGE	*NIST-Traceable Elemental Hg Standards* as defined in Section 3.1.4, Part 63, Subpart UUUUU, Appendix A.
HGO	*NIST-Traceable Source of Oxidized Hg* as defined in Section 3.1.5, Part 63, Subpart UUUUU, Appendix A.

Specific Considerations

Maintenance Procedures

- During maintenance procedures, the calibration gas injections used during those procedures do not have to be reported if the results of the calibration gas injection do not

indicate that the control status of the monitor has changed. For instance, if a monitoring system is already out-of-control and calibration gases are injected as part of the maintenance procedures, the results of these injections do not have to be reported. Only the results of the post-maintenance calibration error test which is used to validate the subsequent emissions data must be reported. Similarly, if as part of a maintenance procedure on one monitor, calibration gases must be injected into other monitors, the results of these injections do not have to be reported as long as they are within the calibration error specification. If the results of these injections indicate that any monitoring system is out-of-control, these injections must be reported and considered to be a failed calibration error test.

Components Belonging to Multiple Systems

- If a component is part of two (or more) systems (for example, a CO_2 analyzer used both as a primary CO_2 monitor and as a diluent monitor in a NO_x-diluent monitoring system) the calibration error test should only be reported once, using the component ID. Data validation for each monitoring system of which the component is part will be determined based on this single test record.

Moisture Monitoring Systems

- For moisture monitoring systems consisting of wet- and dry-basis O_2 monitors, report two calibrations only if the wet and dry readings are obtained from two different analyzers. Report only the dry-basis O_2 calibration when a single analyzer is used for both wet and dry oxygen.

Flow Monitoring Systems

- For flow monitoring systems comprised of two flow components, perform and report a daily calibration for each flow component in the system.

Dual Range Monitors

- For dual range monitors, perform and report daily calibrations for the instrument range(s) used during the day.

Provisions for Conducting Daily Calibration

- Conduct the daily calibration according to the requirements of 40 CFR Part 75, Appendices A and B or (if applicable) 40 CFR Part 63, Subpart UUUUU. Daily calibrations validate the acceptability of emissions data from each monitoring component.

2.3 WEEKLY TEST SUMMARY DATA

WEEKLY TEST SUMMARY DATA XML Model

Figure 6
WEEKLY TEST SUMMARY DATA XML Elements

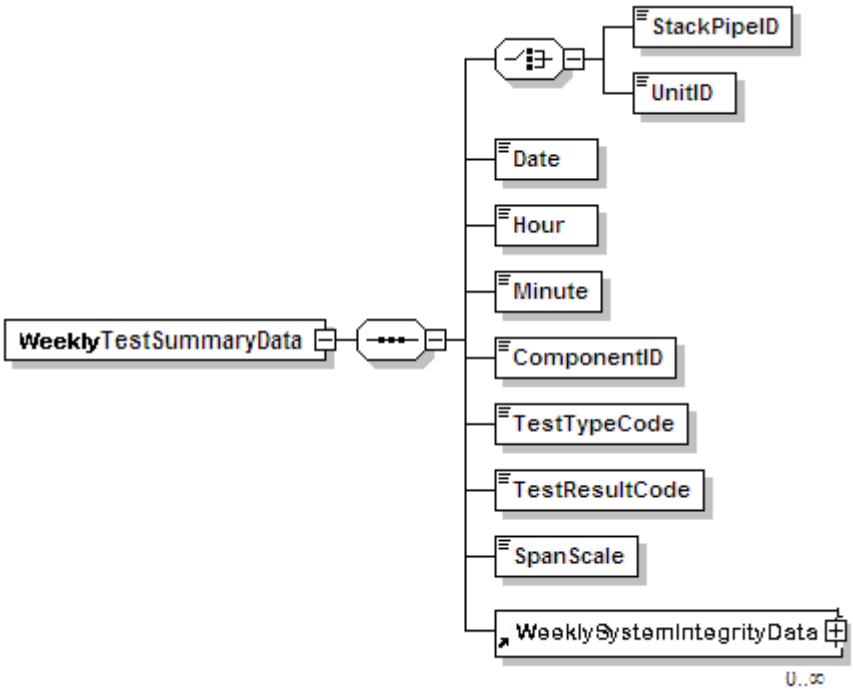

WEEKLY TEST SUMMARY DATA Overview

Description of Data

The WEEKLY TEST SUMMARY DATA record summarizes the completion date and time, and the results (Passed/Failed) for each weekly system integrity check (required to be performed for Hg CEMS with converters that conduct daily calibration error tests using an elemental Hg standard). For each, single-point system integrity check, report the test data in the WEEKLY SYSTEM INTEGRITY DATA record. (See instructions for that record below.)

Report the results of all failed and passed weekly system integrity checks that affect data validation. You are not required to report additional failed single-point system integrity test data for a component when the data from that component are already considered invalid due to a previously failed test. However, please note that tests reported as "FAILED" should be reported with all the necessary fields completed.

WEEKLY TEST SUMMARY DATA XML Elements

Unit ID or Stack Pipe ID
Element Name: *UnitID or StackPipeID*

Report either the Unit ID or Stack Pipe ID for the daily test location. This is the alphanumeric code assigned by a source to identify a unit or stack.

Date
Element Name: *Date*

Report the date corresponding to the completion of the test.

Hour
Element Name: *Hour*

Report the hour corresponding to the completion of the test.

Minute
Element Name: *Minute*

Report the minute corresponding to the completion of the test.

Component ID
Element Name: *ComponentID*

Report the three character ID assigned to the component.

Test Type Code
Element Name: *TestTypeCode*

Report the test type code as HGSI1 to indicate a Single-Point System Integrity Check.

Test Result Code
Element Name: *TestResultCode*

Report the test result code as PASSED, PASSAPS, or FAILED. See detailed descriptions of each code in Table 7, below. The applicable performance specifications for this test are found in Table A-2 of Appendix A to 40 CFR Part 63, Subpart UUUUU.

Table 7
Test Result Code Descriptions for Weekly System Integrity Checks

Code	Description
PASSED	Report this code whenever the standard performance specification in Table A-2 of Appendix A to 40 CFR Part 63, Subpart UUUUU is met.
PASSAPS	Report this code whenever the standard performance specification is not met but the alternative performance specification in Table A-2 is met.
FAILED	Report this code whenever the system integrity error (SIE) fails to meet either the standard or alternative performance specification. Data for the monitoring system will be considered invalid until a subsequent retest is passed.

Span Scale Code
Element Name: *SpanScaleCode*

Report a span scale code of "H."

2.3.1 WEEKLY SYSTEM INTEGRITY DATA

Figure 7
WEEKLY SYSTEM INTEGRITY DATA XML Elements

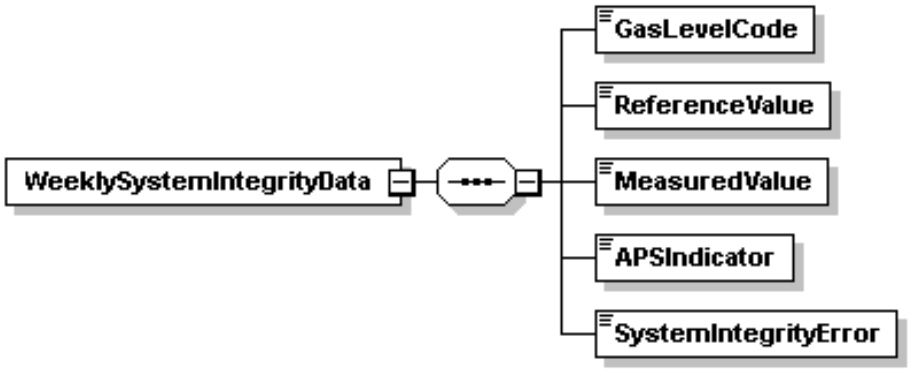

Description of Data

The WEEKLY SYSTEM INTEGRITY DATA record is used to report the details of each single-point system integrity check performed for Hg CEMS with converters that conduct daily calibration error tests using an elemental Hg standard.

For more information concerning this record see the "Specific Considerations" section below.

WEEKLY SYSTEM INTEGRITY DATA Elements

Instructions for completing each element of the WEEKLY SYSTEM INTEGRITY DATA record are provided below:

Gas Level Code
Element Name: *GasLevelCode*

Indicate whether the standard used is a high- or mid-level NIST-traceable source of oxidized Hg, by reporting the appropriate code (H or M). Calibration standard injections should be performed at the level which is most representative of the actual stack emissions.

Reference Value
Element Name: *ReferenceValue*

Report the value of the calibration standard used for the injection. Report the reference value, in µg/scm, rounded to one decimal place.

Measured Value
Element Name: *MeasuredValue*

Report the value measured by the instrument (µg/scm) in response to the reference following the calibration standard injection. Report this value in µg/scm rounded to one decimal place.

APS Indicator
Element Name: *APSIndicator*

If the system integrity error (SIE) is determined using the standard performance specification, report "0". If the alternative performance specification is used to pass the test, report "1".

System Integrity Error
Element Name: *SystemIntegrityError*

Calculate and report the results of the single-point system integrity check as a percentage of the reference gas value or, if necessary, as the absolute value of the difference between the reference and measured values, (i.e., |R - A|).

If the calculated system integrity error meets the standard performance specification, report the result as a percentage of the reference gas value, even though the result would also pass the alternative specification. Only when the result does not pass the standard specification, but meets the alternative specification, should |R - A| be reported. If the system integrity check fails both specifications, report the SIE as a percentage of the reference gas value.

Specific Considerations

- The "weekly" single-point system integrity check must be performed at least once every 7 operating days (see section 5.1.2.3 of Appendix A to 40 CFR Part 63, Subpart UUUUU).

- The test must be done while the unit is combusting fuel. A mid-level or high-level NIST-traceable source of oxidized Hg must be used.

- There is no grace period for this test.

2.4 DAILY EMISSIONS DATA

DAILY EMISSIONS DATA XML Model

Figure 8
DAILY EMISSION DATA XML Elements

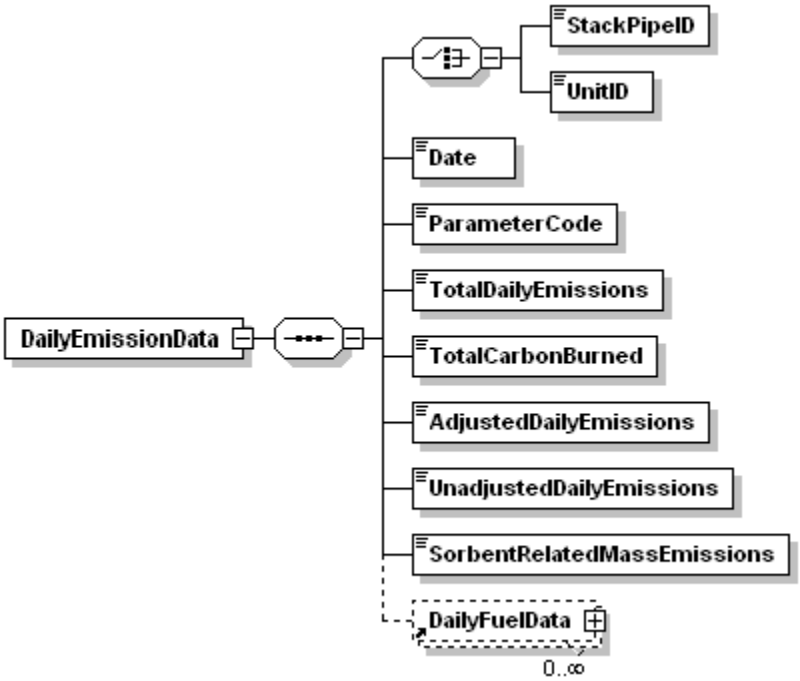

DAILY EMISSIONS DATA Overview

Description of Data

Submit DAILY EMISSION DATA records to report daily CO_2 mass determined using Appendix G Fuel Sampling and Analysis (FSA) and Equation G-1. Note that this CO_2 value is the total mass emissions for the day, <u>not</u> a daily rate.

DAILY EMISSIONS DATA XML Elements

Instructions for completing each element of the DAILY EMISSION DATA Elements section are provided below:

Unit ID or Stack Pipe ID

Element Name: *UnitID or StackPipeID*

Report either the Unit ID or Stack Pipe ID for the daily emissions location. This is the alphanumeric code assigned by a source to identify a unit or pipe.

Date
Element Name: *Date*

Report the date corresponding to the daily emissions.

Parameter Code
Element Name: *ParameterCode*

Report the parameter code for daily emissions monitoring as CO2M.

Total Daily Emissions
Element Name: *TotalDailyEmissions*

Report the total CO_2 mass emissions for the day in tons. Round to one decimal place.

Total Carbon Burned
Element Name: *TotalCarbonBurned*

Report the total amount of carbon burned (in lbs) during the day.

Adjusted Daily Emissions
Element Name: *AdjustedDailyEmissions*

This field applies only to coal-fired units and is optional. Report the adjusted value, in tons, if adjusting the CO_2 mass emissions for carbon content of the fly ash. Round to one decimal place.

Leave this field blank if electing <u>not</u> to make an adjustment for the carbon content of the fly ash.

Unadjusted Daily Emissions
Element Name: *UnadjustedDailyEmissions*

Report the unadjusted daily emissions value determined using the G-1 equation.

Sorbent Related Mass Emissions
Element Name: *SorbentRelatedMassEmissions*

This field is only for units with add-on SO_2 emission controls. Report data in this field in tons. Round to one decimal place.

2.4.1 DAILY FUEL DATA

DAILY FUEL DATA XML Model

Figure 9
DAILY FUEL DATA XML Elements

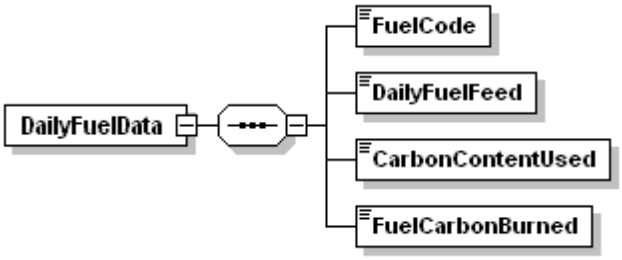

DAILY FUEL DATA Overview

Description of Data

Submit Daily Fuel Data records to report fuel-specific data used when using Appendix G Fuel Sampling and Analysis (FSA) and Equation G-1 to determine daily CO_2 mass if required to do so on behalf of the RGGI program.

DAILY FUEL DATA XML Elements

Fuel Code
Element Name: *FuelCode*

Report the fuel code of a specific fuel used during the day.

Daily Fuel Feed
Element Name: *DailyFuelFeed*

Report the feed rate of a specific fuel (in lbs) used during the day.

CarbonContent Used
Element Name: *CarbonContentUsed*

Report the amount of carbon burned as a percentage of the daily feed rate for a specific fuel.

Fuel Carbon Burned
Element Name: *FuelCarbonBurned*

Report the amount of carbon burned (in lbs) during the day for a specific fuel.

2.5 HOURLY OPERATING DATA

HOURLY OPERATING DATA XML Model

Figure 10
HOURLY OPERATING DATA XML Elements

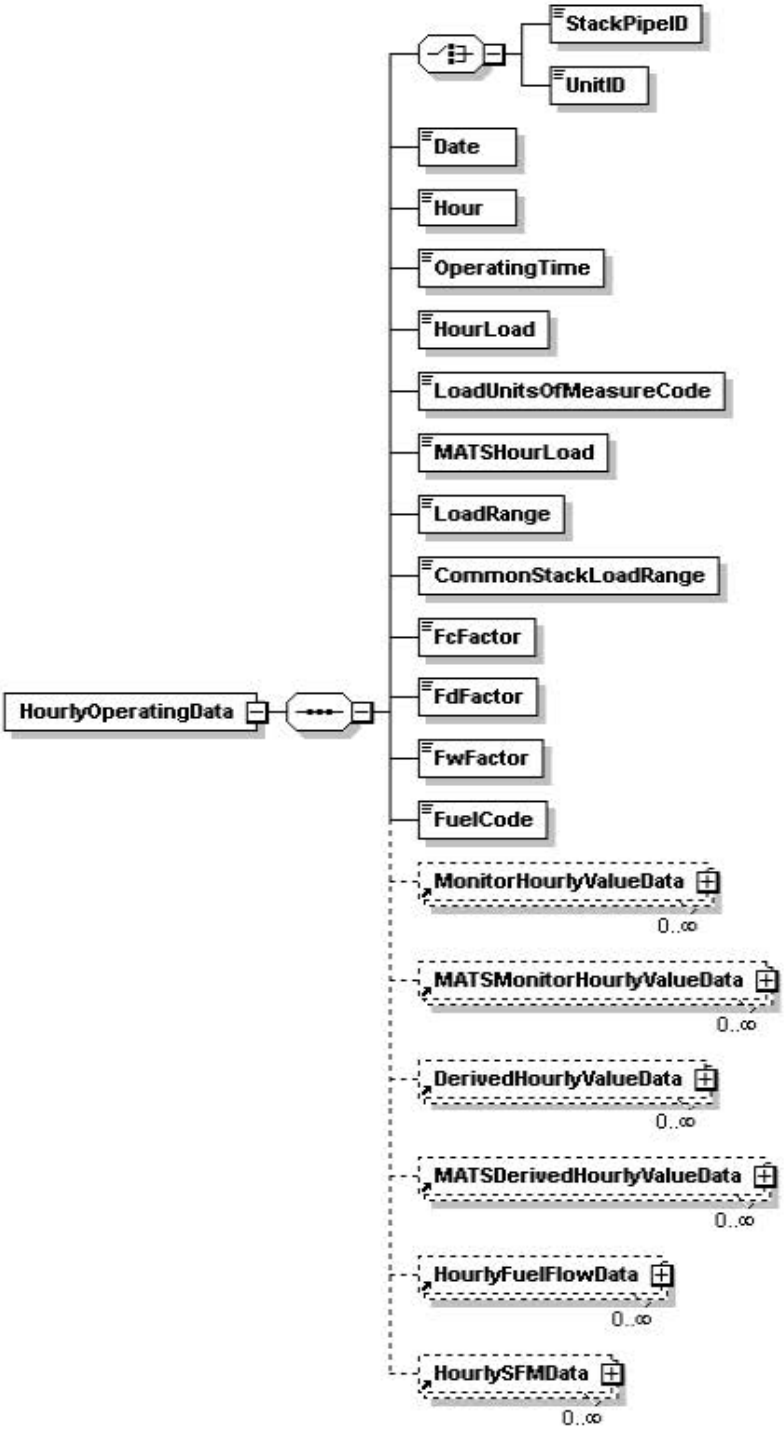

HOURLY OPERATING DATA Overview

Description of Data

Report an HOURLY OPERATING DATA record for every clock hour of the reporting period for every unit, stack, and pipe in the monitoring configuration represented by this emissions file. (You must report these records even for non-operating quarters.) Report an HOURLY OPERATING DATA record for every clock hour, as follows: (a) for each affected unit, irrespective of the location(s) at which the emissions are measured; and (b) for each common stack (or pipe) or multiple stack (or pipe) location at which emissions are measured.

For example, if common stack CS1 serves Units 1 and 2 and emissions are monitored at the common stack, report HOURLY OPERATING DATA for the common stack and also report HOURLY OPERATING DATA for each unit. As a second example, if Unit 1 discharges through two stacks, MS1 and MS2, and emissions are monitored at each stack, report separate HOURLY OPERATING DATA for each stack and also report HOURLY OPERATING DATA for Unit 1.

If a common stack serves Units 1, 2, and 3, but Unit 1 did not operate during the quarter, report HOURLY OPERATING DATA for every clock hour in the quarter for Unit 1 with 0.00 as the operating time and leave the remaining fields blank. The HOURLY OPERATING DATA records for Units 2 and 3 will contain the appropriate operating data.

HOURLY OPERATING DATA XML Elements

Unit ID or Stack Pipe ID

Element Name: *UnitID or StackPipeID*

Report either the Unit ID or Stack Pipe ID for the HOURLY OPERATING DATA. This is the alphanumeric code assigned by a source to identify a unit, stack, or pipe.

Date

Element Name: *Date*

Report the date corresponding to the data being reported.

Hour

Element Name: *Hour*

Report the hour corresponding to the data being reported.

Operating Time

Element Name: *OperatingTime*

Report the fraction of the clock hour during which the unit combusted any fuel (or the fraction of the clock hour during which the stack or pipe was used). You may use any equal increments from hundredths (0.01 hr) to quarters (0.25 hr) of an hour.

If the unit, stack, or pipe did not operate, report "0.00." For common stack and multiple stack configurations, report an operating time of "0.00" in the HOURLY OPERATING DATA record for any clock hour in which none of the units that exhaust through a particular stack are operating or for any clock hour in which the dampers are closed so that flue gas is unable to pass through the stack.

If you elect to use a multiple-stack configuration to report NO_x emissions data from a combined-cycle combustion turbine that: (a) uses Appendix D to measure the unit-level heat input; and (b) has a NO_x-diluent monitoring system installed on each stack (i.e., on the main stack and the bypass stack), report the stack operating times as follows:

- For any hour in which all of the exhaust gases flow through one stack or the other, the operating time for the stack that is in use will be equal to the unit operating time for that hour, and the operating time for the other stack will be 0.00; and

- For a transition hour, in which gases flow through both stacks during the entire hour or any part of the hour:

  -- Report that fraction of the hour (if any) in which gases flow only through the main stack as the "main stack operating time;" and

  -- Report the remainder of the hour in which gases either flow through both stacks simultaneously or flow only through the bypass stack as the "bypass stack operating time."

Operating Time for LME Units

Report the fraction of the clock hour during which the unit combusted any fuel (or the fraction of the clock hour during which the stack or pipe was used).

Report a unit operating time of "0.00" for any clock hour in which the unit did not operate.

Hour Load
Element Name: *HourLoad*

For Part 75 reporting report hourly load information as either steam load or gross unit load. The units for average hourly gross unit load are to be reported in megawatts of electrical generation or in either 1,000 lbs/hr or mmBtu/hr of steam generation. Note that this value represents an hourly rate and not the total load for the hour. Do not correct steam load for standard temperature and pressure; use steam load at measured temperature and pressure (see Part 75, Appendix C, Section 2.2.1).

If you convert auxiliary heat input to the megawatts equivalent (e.g., for a heat recovery steam generator with a duct burner) and add that value to megawatts for a gas turbine, you should report the unit electric load in megawatts.

For all multiple-stack configurations, for each unit operating hour in which gases flow through a particular stack or duct, report the unit load in both the stack-level and unit-level HOURLY OPERATING DATA records for that hour.

For monitored common stacks, report the weighted sum of the hourly unit loads for all units that exhaust through the stack, according to the following formula:

$$\text{Weighted Load} = \frac{\sum (\text{Load}_u \times \text{OpTime}_u)}{\text{OpTime}_{cs}}$$

Leave this element blank (do not report zeros) for any clock hour in which the unit, stack, or pipe did not operate. Also leave this element blank for units that do not produce electrical or steam load (e.g., cement kilns, refinery process heaters, etc.).

Load Units of Measure Code
Element Name: *LoadUnitsOfMeasureCode*

Report the appropriate code to identify the load units of measure.

If you report steam load or thermal output (mmBtu/hr) for Part 75 compliance you must report the appropriate code for steam load or mmBtu/hr in this data element and in the MONITORING LOAD DATA record of your monitoring plan. However, if your EGU is also required to report electrical load for MATS Rule compliance, you must report the equivalent electrical load (megawatts) in the MATS Hour Load data element below.

Table 8
Load Units of Measure Codes and Descriptions

Code	Description
MW	Megawatts
KLBHR	Steam Load (~~1,000~~Thousands of Pounds ~~Steam Load~~ per Hour)
MMBTUHR	~~Steam Load~~ Thermal output in mmBtu per Hour

Leave this element blank for any clock hour in which the unit, stack, or pipe did not operate. Also leave this element blank for units that do not produce electrical or steam load (e.g., cement kilns, refinery process heaters, etc.).

MATS Hour Load
Element Name: MATS*HourLoad*

Leave this field blank if you report electrical load (megawatts) in the Hour Load Data element. However, if you have elected to report steam load or mmBtu/hr in the Hour Load data element for Part 75 compliance and you are also required to report electrical load to comply with the MATS rule (i.e., for electrical output-based emission limits), you must report the equivalent hourly electrical load (megawatts) in this data element (see 40 CFR Part 63, Subpart UUUUU, Appendix A, section 7.1.2.3 and Appendix B, section 10.1.2.3).

Load Range
Element Name: *LoadRange*

Report an operating load range (load bin number) for each operating hour (see Appendix C to Part 75) for units that produce electrical or steam load and that use load-based missing data substitution for one or more monitored parameters. Monitored parameters that require load-based missing data substitution include NO_x emission rate, NO_x concentration (for NOXC systems, only), stack gas flow rate, and fuel flow rate.

For units that do not produce electrical or steam load (e.g., cement kilns, refinery process heaters, etc.), report the operational bin number, if operational bins are used for missing data purposes. If the operational bin number is indeterminable, report "0."

For a monitored common stack, the load bins are defined at the common stack on the basis of combined unit load, and load-based missing data routines are applied at the common stack. Therefore for each unit operating hour, report the common stack load bin number in both the common stack and unit-level HOURLY OPERATING DATA records.

For a multiple-stack configuration in which gases normally flow through both stacks or ducts simultaneously (e.g., a twin-stack or split-breeching configuration), the load bins are set up on the basis of unit load. Therefore, for each unit operating hour, report the unit load bin number in both the unit-level and stack-level HOURLY OPERATING DATA records.

For load-based units, leave this element blank (do not report zeros) for any clock hour in which the unit does not operate or gases do not flow through the stack (as applicable). Also leave this element blank for non load-based units that do not use operational bins for missing data purposes and for LME units.

Common Stack Load Range
Element Name: *CommonStackLoadRange*

For a common stack with installed stack flow monitor, if you have elected to establish 20 load bins for missing data substitution purposes, report the appropriate load bin number using this element. Note that this is an optional alternative to the standard load range.

Fc Factor
Element Name: *FcFactor*

If any emissions calculations at this location require use of the carbon-based F-factor, report the appropriate Fc-factor value corresponding to the fuel(s) burned during the hour.

Fd Factor
Element Name: *FdFactor*

If any emissions calculations at this location require use of the dry-basis F-factor, report the appropriate Fd-factor value corresponding to the fuel(s) burned during the hour.

Fw Factor
Element Name: *FwFactor*

If any emissions calculations at this location require use of the wet-basis F-factor, report the appropriate Fw-factor value corresponding to fuel(s) burned during the hour.

Fuel Code
Element Name: *FuelCode*

You must report data in this field if: (1) you have elected to use the fuel-specific continuous emissions monitoring system (CEMS) missing data option under §75.33; or (2) you have an exhaust configuration consisting of a monitored main stack and an unmonitored bypass stack, and you opt to report the fuel-specific Maximum Potential Concentration (MPC) or maximum potential NO_x emission rate (MER) value during bypass hours (see §§75.16, 75.17 and 75.72). Otherwise, reporting data in this field is optional. Select one Fuel Code shown in Table 9.

Table 9
Fuel Codes and Descriptions

Code	Description
MIX	Use this code for any hour in which fuels are co-fired
BFG	Blast Furnace Gas
BUT	Butane (if measured as a gas)
C	Coal
CDG	Coal-Derived Gas
COG	Coke Oven Gas
CRF	Coal Refuse (culm or gob)
DGG	Digester Gas
DSL	Diesel Oil
LFG	Landfill Gas
LPG	Liquefied Petroleum Gas (as defined in §72.2)
NNG	Natural Gas
OGS	Other Gas
OIL	Residual Oil
OOL	Other Oil
OSF	Other Solid Fuel
PDG	Producer Gas
PNG	Pipeline Natural Gas (as defined in §72.2)

(cont.)

Table 9
Fuel Codes and Descriptions (cont.)

Code	Description
PRG	Process Gas
PRP	Propane (if measured as a gas)
PRS	Process Sludge
PTC	Petroleum Coke
R	Refuse
RFG	Refinery Gas
SRG	Unrefined Sour Gas
TDF	Tire-Derived Fuel
W	Wood
WL	Waste Liquid

2.5.1 MONITOR HOURLY VALUE DATA

MONITOR HOURLY VALUE DATA XML Model

Figure 11
MONITOR HOURLY VALUE DATA XML Elements

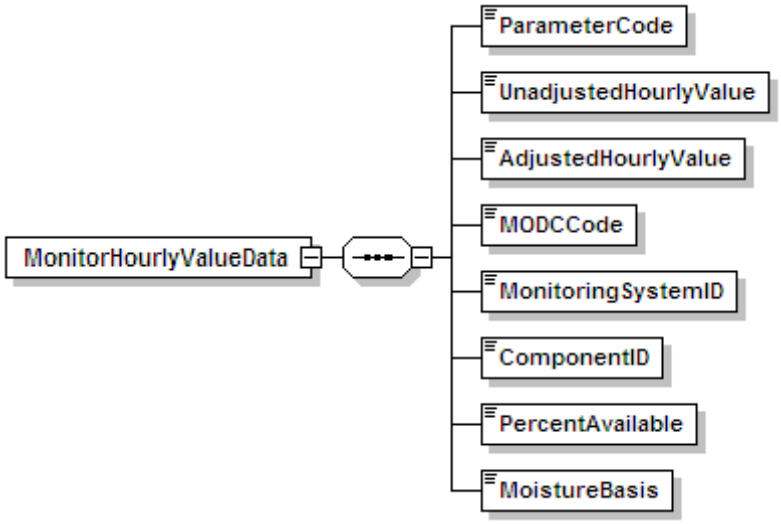

MONITOR HOURLY VALUE DATA Overview

Description of Data

Use the MONITOR HOURLY VALUE DATA (MHV) record to report each value measured by a continuous emission monitoring system (CEMS), or stack gas flow rate monitoring system. The monitored parameters may include SO_2 concentration, NO_x concentration, CO_2 concentration, O_2 concentration, H_2O concentration (moisture), and volumetric flow. Use this record also to report the appropriate missing data substitution values (except for parameters that do not have substitute data requirements). These instructions contain a subsection for each measured parameter, to give specific direction on how to report for that parameter.

<u>SO_2 Concentration</u>

If you use continuous emissions monitoring systems (CEMS) to determine SO_2 mass emissions, report SO_2 concentration in an MHV record for each hour or partial hour of unit operation, with one exception: do not report an MHV record for hours in which only gaseous fuel is combusted, if you account for SO_2 mass emissions during those hours using the provisions of §75.11(e)(1) in lieu of operating and recording data from the SO_2 monitoring system.

Volumetric Flow

If you use stack flow monitoring to determine hourly heat input rate or SO_2, CO_2, or NO_x mass emissions, report volumetric flow in an MHV record for each operating hour or partial operating hour.

Table 10, below, summarizes which elements to report for SO2C and FLOW MHV records.

Table 10
MHV Elements for SO2C or Flow

MHV Elements to Report	SO2C or Flow	
	Measured Data	Missing Data
Parameter Code	✓	✓
Unadjusted Hourly Value	✓	
Adjusted Hourly Value	✓	✓
Method of Determination Code (MODC)	✓	✓
Monitoring System ID	✓	
Component ID	✓	
Percent Available	✓	✓
Moisture Basis		

NO_x Concentration

If you use a NO_x-diluent monitoring system to determine and report the NO_x emission rate and/or a NO_x concentration monitor in conjunction with Stack Flow to determine NO_x mass, report an MHV record, as follows, for NOXC for each unit or stack operating hour as needed for those determinations.

(a) Monitoring locations with only a NO_x-diluent monitoring system:

Report the NOXC MHV record only for hours in which a quality-assured NO_x concentration is available and a quality-assured diluent gas (CO_2 or O_2) concentration is available. (Whenever either the NO_x concentration or diluent concentration is missing for an hour, report the appropriate substitute data value for NO_x emission rate in the DERIVED HOURLY VALUE (DHV) record and do not report an MHV record.)

The elements to report for (a) are summarized in Table 11.

Table 11
MHV Elements for NOXC Record (NOX Rate System Only)

MHV Elements to Report	NOXC MHV Record	
	Measured Data	Missing Data
Parameter Code	✓	NA
Unadjusted Hourly Value	✓	NA
Adjusted Hourly Value		NA
MODC	✓	NA
Monitoring System ID		NA
Component ID	✓	NA
Percent Available		NA
Moisture Basis		NA

(b) Monitoring locations with only a NO_x concentration monitoring system:

Report the NOXC MHV record for every operating hour. If a valid NO_x concentration is not obtained for the hour, report substitute data in the Adjusted Hourly Value element of the record using the applicable missing data procedures for NOXC.

(c) Monitoring locations with both a NO_x-diluent and a NO_x concentration monitoring system:

Report the NOXC MHV record for every operating hour using the Monitoring System ID for the NO_x concentration monitoring system. If a valid NO_x concentration is not obtained for the hour, report the applicable substitute NO_x concentration data in the MHV record using the applicable missing data procedures for NOXC; and report the appropriate substitute data value for NO_x emission rate in the DHV record.

The elements to report for (b) and (c) are summarized in Table 12 below.

Table 12
MHV Elements for NOXC Record (NOXC System)

MHV Elements to Report	NOXC MHV Record	
	Measured Data	Missing Data
Parameter Code	✓	✓
Unadjusted Hourly Value	✓	
Adjusted Hourly Value	✓	✓
MODC	✓	✓
Monitoring System ID	✓[1]	
Component ID	✓	
Percent Available	✓	✓
Moisture Basis		

[1] Report the NOXC System ID.

Note that for units with add-on NO_x emission controls, hours in which the flue gases are discharged through an unmonitored bypass stack are considered to be missing data hours. However, when the outlet NO_x monitor is unavailable and proper operation of the emission controls is not verified, §75.34 (a)(1) allows you to report data from a certified NO_x monitor at the control device inlet. If you choose this option, these hours are treated as "available" hours for the purposes of the missing data look backs and percent monitor data availability (PMA) calculations.

For a summary of these requirements, see Table 13 below.

<u>Reporting of High Range and Full Scale Exceedance Defaults</u>

Treat any hour(s) in which a default high range value (200 percent of Maximum Potential Concentration (MPC)) or a full scale exceedance value (200 percent of range) is used in the calculation of the hourly average NO_x concentration as follows:

(a) For NO_x concentration monitoring systems:

Treat these hours as quality-assured monitor operating hours and include them in missing data lookback and as available hours for percent monitor data availability calculations.

(b) For NO_x-diluent monitoring systems:

1. If a quality-assured diluent value is available for the hour, treat the hour as quality-assured data and use the appropriate NO_x concentration value in conjunction with the quality-assured average diluent gas concentration for the hour to calculate and report NO_x emission rate in the DHV record.

2. If a quality-assured diluent gas concentration is not available for the hour, then consider the NO_x emission rate data for the hour to be missing and do not report any MHV record for the hour. Instead, report the maximum potential NO_x emission rate (MER) as a substitute data value in a DHV record using an MODC of 25.

(c) Where both NO_x concentration and NO_x-diluent monitoring systems are identified:

1. If a quality-assured diluent value is available for the hour, treat the hour as a quality-assured monitor operating hour and include it in the missing data lookback and as an available hour for percent monitor data availability calculations. Also, use the NO_x concentration value in conjunction with the quality-assured average diluent gas concentration for the hour to calculate and report NO_x emission rate in the DHV record.

2. If a quality-assured diluent gas concentration is not available for the hour, treat the hour as a quality-assured monitor operating hour for NOXC and include it in the missing data lookback for NOXC and as an available hour for percent monitor data availability calculations for the NOXC system. However, the NO_x emission rate data for the hour is considered to be missing. Report the MER as a substitute data value in a DHV record using an MODC of 25.

Table 13
Summary of NO_x MONITOR HOURLY VALUE
Record Reporting Requirements

Use of NO_x Analyzer	Monitoring System ID Used	Missing Data Instructions
For NO_x emission rate only or Both NO_x emission rate and NO_x mass calculation using NO_x emission rate x Heat input rate	Blank (Report the NO_x–diluent monitoring system ID in DHV record)	Do not report an MHV record for the hour. Perform NO_x missing data substitution in DHV record (if NO_x or diluent concentration is unavailable).
For NO_x mass calculation using NO_x concentration x stack flow	NO_x concentration monitoring System ID	Perform missing data substitution for NO_x concentration in an MHV record.
Both NO_x emission rate and NO_x mass calculation using NO_x concentration x stack flow	NO_x concentration monitoring System ID	Perform missing data substitution for NO_x concentration in an MHV record. Also perform missing data substitution in the DHV record for NO_x emission rate if either the NO_x or diluent concentration is missing.

CO_2 Concentration

Report a MHV record for CO_2 Concentration only if you use a CO_2 analyzer to determine CO_2 concentration. If you use an O_2 concentration monitor and Equation F-14a or F-14b to determine CO_2 concentration for each hour, report a MHV record for O_2 concentration for the hour (see the

instructions for O_2 Concentration below) and report the calculated CO_2 concentration in a DHV record.

If you use a CO_2 analyzer reading to calculate NO_x emission rate, CO_2 mass emission rate, and/or Heat Input, report a MHV record for CO2C for each unit or stack operating hour as needed for those determinations.

Table 14
MHV Elements for CO2C

MHV Elements to Report	CO2C MHV Records	
	Measured Data	Missing Data[3]
Parameter Code	✓	✓
Unadjusted Hourly Value	✓	✓
Adjusted Hourly Value		
MODC	✓	✓
Monitoring System ID	[1]	
Component ID	✓	
Percent Available	[2]	✓
Moisture Basis		

[1] If the CO_2 component is part of a CO_2 system, report the CO_2 System ID. Otherwise, leave the System ID blank.

[2] If the CO_2 is used to calculate heat input or CO_2 mass rate, report the Percent Available value for every operating hour.

[3] If the CO_2 value is used to calculate heat input or CO_2 mass rate, report an MHV record for CO2C for every operating hour. Otherwise, do not report CO2C MHV records for missing data hours.

(a) Whenever you use a CO_2 monitor to determine CO_2 mass emissions and/or for heat input rate:

Report a MHV record using the CO_2 Monitoring System ID, for each hour or partial hour of unit operation. When the hourly CO_2 concentration is missing, or for hours in which the flue gases are discharged through an unmonitored bypass stack, use the missing data routines in §75.35 and 75.36 to provide substitute data values.

If the CO_2 monitor is also used as the diluent monitor for a NO_x-diluent monitoring system, whenever a CO_2 RATA is failed on the CO_2 monitoring system, then both the CO_2 and NO_x-diluent monitoring systems are considered out-of-control. (See Appendix B §2.3.2(g)). Report the applicable substitute CO_2 concentration data in the MHV record using the applicable missing data procedures for CO2C. For NO_x emission rate, report the appropriate substitute data value in the DHV record.

However, if the CO_2 data for the CO_2 monitoring system is considered out-of-control due to the expiration of the applicable CO_2 RATA but the NO_x RATA has not yet expired,[1] then substitute data should only be used for CO_2 mass and heat input rate calculations and not for calculation of the NO_x emission rate. For NO_x emission rate, the actual measured CO_2 concentration should be used. In such cases, report two CO_2 concentrations for each hour until a CO_2 RATA is completed. First, report the appropriate substitute CO_2 data using the CO_2 System ID. Second, report the actual CO_2 value recorded by the CO_2 component, leaving the System ID blank. (The actual CO_2 value will be used in the NO_x emission rate calculation for the hour, while the substitute data value will be used in the CO_2 mass and heat input rate calculations.)

(b) If you use the CO_2 monitor only to calculate NO_x emission rate:

Report an MHV record for CO_2 concentration. Leave the Monitoring System ID blank. Do not report an MHV record for the hour if: (1) a quality-assured CO_2 concentration is not available; or (2) a quality-assured NO_x concentration is not available; or (3) both (1) and (2). Instead, report a substitute data value for NO_x emission rate in the DHV record.

Note that hours in which the flue gases are discharged through an unmonitored bypass stack are considered to be missing data hours. For these hours, do not report a MHV record. In the DHV record, report the NO_x MER and MODC of "23."

When a default high range value (200 percent of MPC) or a full-scale exceedance value (200 percent of the range) is used in the calculation of the hourly average NO_x concentration, the NO_x concentration is considered to be both quality-assured and available. Therefore, if a quality-assured CO_2 concentration is available for that hour, report a MHV record and calculate the NO_x emission rate in the usual manner. However, if a quality-assured CO_2 concentration is not available for that hour, the NO_x emission rate data for the hour are considered missing. In that case, do not report a MHV record for the hour and report the maximum potential NO_x emission rate (MER) as a substitute data value in DHV record, using an MODC of "25."

<u>O_2 Concentration</u>

Report an MHV record for O_2 concentration for each hour in which you use the O_2 concentration to determine the hourly NO_x emission rate, heat input rate, or CO_2 concentration. Report two MHV records for O_2 concentration (one wet-basis and one dry-basis) for each hour in which you use O_2 concentration to determine percent moisture.

If the O_2 value is used for the heat input calculation, report the MHV record for O_2 for every operating hour and use the appropriate substitute data for any operating hour in which a quality-assured O_2 value in not obtained. Otherwise, report the MHV record only for hours in which a quality-assured O_2 value is obtained.

[1] Note that this situation should only arise if the NO_x emission rate RATA was done using O_2 as the diluent for the reference method or if the CO_2 RATA data are not submitted. If the RATA was conducted using a CO_2 diluent in the reference method, then there should be sufficient CO_2 data available to submit a RATA for the CO_2 system.

Table 15
MHV Elements for O2C

MHV Elements to Report	O2C MHV Records	
	Measured Data	Missing Data[4]
Parameter Code	✓	✓
Unadjusted Hourly Value	✓	✓
Adjusted Hourly Value		
MODC	✓	✓
Monitoring System ID	[1]	
Component ID	✓	
Percent Available	[2]	✓
Moisture Basis	[3]	

[1] If the O_2 component is part of a CO_2 system, report the CO_2 System ID. If the O_2 component is part of an O_2 system, report the O_2 System ID. Otherwise, leave the System ID blank.

[2] If the O_2 value is used to calculate heat input, report the Percent Available value for every operating hour.

[3] If the O_2 value is used to calculate H_2O, report the Moisture basis. Otherwise, leave this field blank.

[4] If the O_2 value is used to calculate heat input, report an MHV record for O2C for every operating hour. Otherwise, do not report O2C MHV records for missing data hours.

(a) Whenever you use an O_2 monitor to determine CO_2 concentration, CO_2 mass emissions, and/or for heat input rate (as part of a CO_2 monitoring system):

Report an MHV record using the CO_2 Monitoring System ID, for each hour or partial hour of unit operation in which a quality-assured O_2 value is obtained. When the hourly O_2 concentration is missing, or for hours in which the flue gases are discharged through an unmonitored bypass stack, use the missing data routines in §75.36 to provide substitute data values if the O_2 value is used to determine heat input.

If the O_2 monitor is also used as the diluent monitor for a NO_x-diluent monitoring system, whenever a CO_2 RATA is failed on the CO_2 monitoring system, then the CO_2, and NO_x-diluent monitoring systems (as applicable) are each considered to be out-of-control. (See Appendix B §2.3.2(g).) If heat input is calculated from the O_2, report the applicable substitute O_2 concentration data in the MHV record using the applicable missing data procedures for O2C. For CO_2 concentration, CO_2 mass, and NO_x emission rate, report the appropriate substitute data values in the appropriate DHV records. However, if the O_2 data for the CO_2 monitoring system is considered out-of-control due

to the expiration of the applicable CO_2 RATA but the NO_x RATA has not yet expired,[2] then substitute data should only be used for CO_2 concentration and heat input rate calculations and not for calculation of the NO_x emission rate. The actual measured O_2 concentration should be used to calculate NO_x emission rate. In such cases, report two O_2 concentrations for each hour until a CO_2 RATA is completed. First, report the appropriate substitute O_2 data using the CO_2 system. Second, report the actual O_2 value recorded by the O_2 component, leaving the System ID blank. (The monitor O_2 value will be used in the NO_x emission rate calculation for the hour, while the substitute data value will be used in the heat input rate calculation.)

(b) Whenever you use an O_2 monitoring system to determine heat input rate:

Report an MHV record using the O_2 Monitoring System ID, for each hour or partial hour of unit operation. When the hourly O_2 concentration is missing, or for hours in which the flue gases are discharged through an unmonitored bypass stack, use the missing data routines in §75.36 to provide substitute data values.

If the O_2 monitor is also used as the diluent monitor for a NO_x-diluent monitoring system, whenever O_2 RATA is failed for the O_2 monitoring system, then the NO_x-diluent monitoring systems is also considered to be out-of-control. (See Appendix B §2.3.2(g).) For heat input that is calculated from the O_2, report the applicable substitute O_2 concentration data in the MHV record using the applicable missing data procedures for O2C. For NO_x emission rate, report the appropriate substitute data values in the appropriate DHV record. However, if the O_2 data for the O_2 monitoring system is considered out-of-control due to the expiration of the applicable O_2 RATA but the NO_x RATA has not yet expired,[3] then substitute data should only be used for calculating heat input rate and not for calculation of the NO_x emission rate. The actual measured O_2 concentration should be used to calculate NO_x emission rate. In such cases, report an additional O_2 concentration record for each hour until an O_2 RATA is completed. First, report the appropriate substitute O_2 data using the O_2 System ID. Secondly, report the actual O_2 value recorded by the O_2 component leaving the System ID blank. (The recorded O_2 value will be used in the NO_x emission rate calculation for the hour, while the O2C substitute data value will be used in the heat input rate calculations.)

(c) If the O_2 value is used only for calculating NO_x emission rate, then report the MHV record for O_2 only when quality-assured values are obtained for <u>both</u> O_2 and NO_x concentration. Leave the System ID blank. Note that hours in which the flue gases are discharged through an unmonitored bypass stack are considered to be missing data hours. (For these hours, do not report an MHV record. In the DHV record, report the NO_x MER and an MODC of "23.")

[2] Note that this situation should only arise if the NO_x emission rate RATA was done using O_2 as the diluent for the reference method or if the CO_2 RATA data are not submitted. If the RATA was conducted using a CO_2 diluent in the reference method, then there should be sufficient CO_2 data available to submit a RATA for the CO_2 system.

[3] Note that this situation should only arise if the NO_x emission rate RATA was done using CO_2 as the diluent for the reference method or if the O_2 RATA data are not submitted. If the RATA was conducted using an O_2 diluent in the reference method, then there should be sufficient O_2 data available to submit a RATA for the O_2 system.

(d) If you also use wet and dry O_2 monitors to determine the hourly percent moisture:

Report two O_2 MHV records for each hour. Report the wet O_2 measurement with a "W" as the Moisture Basis data element and report the dry O_2 measurement with a "D" as the Moisture Basis data element. If either the wet or dry O_2 component is also used to calculate heat input, NO_x emission rate, and/or CO_2 concentration, then follow the applicable reporting instructions from sections (a), (b), or (c), above, to report the data for that component. For the remaining component, report the MHV for each hour, and leave the System ID blank.

If either O_2 value is missing, or for hours in which the flue gases are discharged through an unmonitored bypass stack, perform missing moisture data substitution in the DHV record for moisture, in accordance with §75.37.

Moisture (H_2O)

For any unit or stack that monitors H_2O with a moisture sensor (or, for saturated gas streams, from a temperature sensor and look-up table), report the moisture value in a moisture MHV record for each operating hour or partial operating hour.

Table 16
MHV Elements for H2O

MHV Elements to Report	H2O	
	Measured Data	Missing Data
Parameter Code	✓	✓
Unadjusted Hourly Value	✓	✓
Adjusted Hourly Value		
MODC	✓	✓
Monitoring System ID	✓	
Component ID	✓	
Percent Available	✓	✓
Moisture Basis		

If you use a fuel-specific default moisture value, as allowed under §75.11 or §75.12 (for coal, wood, and natural gas burning units only), report the value in the MONITOR DEFAULT DATA record and use this constant in the calculation. Do not report a moisture MHV record on an hourly basis. However, if you have more than one active fuel-specific default moisture value defined in your monitoring plan, report the fuel-specific or pro-rated moisture value used in your emissions calculations in an H_2O DHV record.

The Part 75 missing data procedures for moisture are found in §75.37. These procedures are modeled after the standard missing data procedures for SO_2. In most instances, the moisture missing data algorithm is the inverse of the SO_2 algorithm (i.e., the lower moisture values are more conservative and therefore an inverted moisture missing data algorithm must be applied (using 10th percentile values instead of 90th percentile values, minimum values instead of maximum values, etc.)). However, when Equations 19-3, 19-4, or 19-8 from Method 19 of 40 CFR Part 60 are used to determine NO_x emission rate, a higher moisture value is more conservative and therefore the standard SO_2 missing data algorithm must be applied.

MONITOR HOURLY VALUE DATA XML Elements

Parameter Code

Element Name: *ParameterCode*

Report the Parameter Code that corresponds to the parameter monitored at the location defined by the Stack Pipe ID or Unit ID. Use the appropriate uppercase code as shown in Table 17.

Table 17
Parameter Codes and Descriptions
for the MHV DATA Record

Code	Description
CO2C	CO_2 Concentration (%, pct)
FLOW	Volumetric Flow Rate (scfh)
H2O	Moisture (using moisture sensors, or temperature sensors) (%, pct)
NOXC	NO_x Concentration (ppm)
O2C	O_2 Concentration (%, pct)
SO2C	SO_2 Concentration (ppm)

Unadjusted Hourly Value

Element Name: *UnadjustedHourlyValue*

Report the unadjusted concentration or stack flow value for the hour. See below for parameter-specific instructions.

<u>SO_2 Concentration</u>

Report the unadjusted, quality-assured SO_2 concentration for the hour, expressed in parts per million (ppm) and round the resulting value to the appropriate number of decimal places per Table 16. Leave this field blank for hours in which you use substitute data.

Leave this field blank for hours in which the flue gases are routed through an unmonitored bypass stack, or when the outlet SO_2 monitor is unavailable and proper operation of the emission

controls is not verified, if you report the MPC for those hours. However, if you report data from a certified inlet monitor during those hours, report the unadjusted SO_2 concentration recorded by the monitor.

Do not leave this field blank for hours in which: (1) very low sulfur fuel is combusted and you report a 2.0 ppm default value; or (2) you use the default high range value of 200 percent of the MPC in the calculation of the hourly SO_2 concentration; or (3) a full-scale exceedance occurs and you use 200 percent of the range in the calculation of the hourly SO_2 concentration. All of the hours described in (1) – (3), above, are treated as quality-assured monitor operating hours.

NO_x Concentration

For both NO_x concentration monitoring systems and NO_x-diluent monitoring systems, report the unadjusted, quality-assured NO_x concentration for the hour, expressed in parts per million (ppm) and round the resulting value to the appropriate number of decimal places per Table 16. Leave this field blank for hours in which you use substitute data for NO_x concentration.

Do not leave this field blank for hours in which: (1) you use a default high range value of 200 percent of the MPC in the calculation of the hourly NO_x concentration; or (2) a full-scale exceedance occurs and you use 200 percent of the range in the calculation of the hourly NO_x concentration. All of the hours described in (1) and (2), above are treated as quality-assured monitor operating hours. Refer to the Part 75 Emissions Monitoring Policy Manual for further discussion of overscaling and use of the default high range.

For units with add-on NO_x emission controls, if you report data from a certified control device inlet monitor during hours in which the outlet NO_x monitor is unavailable and proper operation of the emission controls is not verified, report the average, unadjusted NO_x concentration recorded by the inlet monitor.

CO_2 Concentration

Report the CO_2 concentration for the hour, expressed in percent CO_2 (%CO_2) and round the resulting value to the appropriate number of decimal places per Table 16. If applicable, during hours in which you use substitute data, or for hours in which the flue gases are discharged through an unmonitored bypass stack, report the substituted value obtained from the CO_2 missing data procedures under §§75.35 or 75.36 (as applicable). If applicable for NO_x emission rate calculations, for each hour in which you use the diluent cap value to calculate NO_x emission rate, report the actual quality-assured CO_2 concentration in MHV record for CO2C and appropriate MODC ("01" through "04"), and report an MODC of "14" in the DHV record for NO_x emission rate.

Whenever it is necessary to report a second CO_2 concentration record to calculate NO_x emission rate for an hour, report the actual CO_2 concentration for the hour and the appropriate MODC (either "01" or "02"). See instructions under Description of Data for CO_2 Concentration.

O_2 Concentration

Report O_2 concentration for the hour, expressed in $\%O_2$, and round the resulting value to the appropriate number of decimal places per Table 16. For each hour in which you use the diluent cap value to calculate NO_x emission rate, report the actual quality-assured O_2 concentration and appropriate MODC ("01" through "04"). For each such hour, report an MODC of "14" in the NO_x emission rate DHV record, to indicate that the diluent cap is being used for NO_x emission rate.

For any hour in which there is a full scale exceedance of the O_2 monitor range, report the appropriate diluent cap value for the type of unit and an MODC of "20." You must also report a default record in the monitoring plan with a parameter code of O2X and a Default Purpose Code of "DC" containing this value even if you do not calculate an hourly NO_x Emissions Rate. (Note that you may instead report a time weighted average calculated using the diluent cap value for the portion of the hour that the monitoring range was exceeded with the quality assured data collected during the portion of the hour when the range was not exceeded. In this case, report the hourly average but use an MODC of "20" to indicate a range exceedance has occurred during the hour.)

If you use wet and dry O_2 monitors to determine the hourly percent moisture and both values are quality-assured, report two O_2 MHV records for each hour.

If you use O_2 concentration for the heat input rate calculation, report the appropriate substitute data value in this field when a quality-assured O_2 concentration for the hour is unavailable or for hours in which the flue gases are discharged through an unmonitored bypass stack. Otherwise, if a quality-assured O_2 concentration is not obtained, do not report an MHV record for the hour.

Moisture

Report moisture for the hour, expressed in $\%H_2O$, and round the resulting value, obtained either from a moisture sensor, or for saturated gas streams, from a temperature sensor and look-up table, to the appropriate number of decimal places per Table 16. Report the appropriate substitute data value for hours in which a quality-assured moisture percentage is unavailable or for hours in which the flue gases are discharged through an unmonitored bypass stack.

Volumetric Flow

For each operating hour (or partial operating hour) in which a quality-assured flow rate was measured (MODC "01" through "04" and "54"), report the unadjusted flow rate in units of scfh (wet-basis). Report flow rate to the appropriate number of decimal places per Table 16. For missing data hours, leave this field blank (this includes hours in which the flue gases are discharged through an unmonitored bypass stack).

If a start-up or shut-down hour results in a stack flow rate that is too low to be registered by the stack flow monitor, you may report a default minimum stack flow rate of 1,000 scfh. Report an MODC of "55" for the hour. Manual entry of this MODC is permitted.

Adjusted Hourly Value
Element Name: *AdjustedHourlyValue*

Leave this field blank for parameters CO2C, H2O, and O2C.

SO_2 Concentration

For each hour in which you obtain quality-assured values, apply the appropriate bias adjustment factor (BAF) to the rounded average SO_2 concentration for the hour. Report the adjusted SO_2 concentration for the hour in ppm and round the resulting value to the appropriate number of decimal places per Table 16.

Note that for an initial certification, analyzer replacement, or complete monitoring system replacement (as indicated by reporting a QA AND CERTIFICATION EVENT record with a QACertificationEventCode value of "100," "101," "120," or "125"), if you are using conditional data validation, the BAF is uncertain during the conditional data period. Therefore, apply a BAF of 1.000 from the beginning of the conditional data validation period to the completion hour of the certification or recertification RATA.

For each hour in which you use missing data procedures, report the substitute data value.

For each hour in which the flue gases are routed through an unmonitored bypass stack, or when the outlet SO_2 monitor is unavailable and proper operation of the emission controls is not verified, you may either report the MPC in this field or, if data are available from a certified inlet monitor, report the bias-adjusted SO_2 concentration measured by the monitor.

For each hour in which only very low sulfur fuel (as defined in §72.2) is combusted, report the bias-adjusted hourly average SO_2 concentration, unless it is less than 2.0 ppm, in which case, report "2.0 ppm."

For each hour in which a default high range value is used in the calculation of the hourly average SO_2 concentration, report the bias-adjusted hourly average in this field unless application of the BAF causes the hourly average to exceed 200 percent of the MPC, in which case, report 200 percent of the MPC.

When a full-scale exceedance of the high range occurs and 200 percent of the range is used in the calculation of the hourly average SO_2 concentration, report the bias-adjusted hourly average in this field unless application of the BAF causes the hourly average to exceed 200 percent of the range, in which case, report 200 percent of the range.

Refer to the Part 75 Emissions Monitoring Policy Manual for a further discussion of overscaling and use of the default high range value.

NO_x Concentration

Report data in this field only if you use NO_x concentration times stack flow rate to determine NO_x mass emissions. Leave this field blank if you do not have a NO_x concentration system.

For each hour in which you obtain a quality-assured value, apply the appropriate adjustment factor (1.000 or system BAF) to the rounded average NO_x concentration for the hour. Report the adjusted average NO_x concentration for the hour in ppm and round the resulting value to the appropriate number of decimal places per Table 16.

Note that for an initial certification, analyzer replacement, or complete monitoring system replacement (as indicated by reporting a QA AND CERTIFICATION EVENT record with a QACertificationEventCode value of "100," "101," "120," or "125"), if you are using conditional data validation, the BAF is uncertain during the conditional data period. Therefore, apply a BAF of 1.000 from the beginning of the conditional data validation period to the completion hour of the certification or recertification RATA.

For each hour in which NO_x concentration is missing, report the substitute NO_x concentration value.

For each hour in which a default high range value is used in the calculation of the hourly average NO_x concentration, report the bias-adjusted hourly average in this field, unless it exceeds 200 percent of the MPC, in which case, report 200 percent of the MPC.

When a full-scale exceedance of the high range occurs and 200 percent of the range is used in the calculation of the hourly average NO_x concentration, report the bias-adjusted hourly average in this field, unless it exceeds 200 percent of the range, in which case, report 200 percent of the range.

For units with add-on NO_x emission controls, if you report data from a certified NO_x monitor at the control device inlet during hours in which the outlet NO_x monitor is unavailable and proper operation of the emission controls is not verified, report the average, bias-adjusted NO_x concentration recorded by the monitor. Include these hours in the missing data lookbacks and treat them as available hours in the PMA calculations.

Volumetric Flow

For hours in which quality-assured data are obtained, apply the appropriate bias adjustment factor (1.000 or BAF) to the rounded quality-assured value and report the adjusted stack flow for the hour. Report the resulting value to the appropriate precision according to Table 18. For each hour in which missing data procedures are used to report data, report the substitute data value. When the flue gases are discharged through an unmonitored bypass stack, report the appropriate substitute data value for flow rate (under §75.33) in this field. Do not leave this field blank.

Note that for an initial certification, analyzer replacement, or monitoring system replacement (as indicated by reporting a QA AND CERTIFICATION EVENT record with a QACertificationEventCode value of "300" or "305"), if you are using conditional data validation, the BAF is uncertain during the conditional data period. Therefore, apply a BAF of 1.000 from the beginning of the conditional data validation period to the completion hour of the certification or recertification RATA.

Table 18
Precision of Reported Values for
MONITOR HOURLY VALUE DATA

Parameter Codes	Required Precision*
CO2C, H2O, O2C	One Decimal Place
NOXC, SO2C	One Decimal Place
FLOW	Nearest 1,000 scfh

* All substitute data values should be rounded to the same precision as quality-assured data.

MODC Code

Element Name: *MODCCode*

Report the appropriate method of determination code (MODC) to identify the type of monitoring system or value used to measure and report the concentration or stack flow for the hour. For CEMS, manual entry of MODCs "16," "17," and "21" is permitted. EPA has reserved codes "01" through "55." Codes "56" through "99" may be used by vendors and companies for other purposes but must not be reported in a quarterly report.

Table 19
MODC Codes and Descriptions for MHV

Code	Parameters	Description
01	All	Primary Monitoring System (and Primary Bypass (PB))
02	All	Redundant Backup or Regular Non-Redundant Backup Monitoring System
03	All	Approved Alternative Monitoring System
04	All	Reference Method Backup System
05	SO2C, NOXC,	Preapproved Parametric Monitoring Method Data for Controlled Units
	FLOW	Part 75 Approved Parametric Method
06	All	Average Hour Before/Hour After
07	All	Average Hourly Value, Initial Missing Data

(cont.)

Table 19
MODC Codes and Descriptions for MHV (cont.)

Code	Parameters	Description
08	CO2C, NOXC, SO2C, FLOW,	90th Percentile Value in Load Range in Lookback Period.
	H2O	90th or 10th Percentile Value in Load Range in Lookback Period.
	O2C	10th Percentile Value in Load Range in Lookback Period.
09	CO2C, NOXC, SO2C, FLOW,	95th Percentile Value in Load Range in Lookback Period (for the corresponding load bin, if applicable).
	H2O	95th or 5th Percentile Value in Load Range in Lookback Period.
	O2C	5th Percentile Value in Load Range in Lookback Period.
10	All	Maximum (or Minimum for O_2 or H_2O, if applicable) Hourly Value in Load Range in Lookback Period.
11	NOXC, FLOW	Average Hourly Value in Load Range in Lookback Period.
12	All	Maximum (or Minimum for O_2 or H_2O, if applicable) Potential Concentration (MPC) or Flow Rate (see Section 2.1 of Appendix A to Part 75).
13	SO2C, NOXC,	Maximum Expected Concentration (MEC) (see §75.34(a)(5)).
15	SO2C, NOXC,	1.25 times the maximum hourly controlled concentration at the corresponding load or operation bin, in the applicable lookback period (see §75.34(a)(5)).
16	SO2C	SO_2 Concentration Value of 2.0 ppm during hours when very low sulfur fuels are combusted. These hours are included in missing data lookback and are treated as available hours for percent availability calculation.
17	CO2C, NOXC, O2C, SO2C	Temporary Like-Kind Replacement Analyzer.
18	NOXC, SO2C	Maximum Potential Concentration (MPC) used to determine the hourly average for the portion of the hour when a high range monitor was unavailable due to an expired linearity or daily calibration error test. (See Policy Question 9.20)
19	NOXC, SO2C	200 percent of MPC; Default High Range Value. These hours are included in missing data lookback and are treated as available hours for percent availability calculations.
20	CO2C, NOXC, O2C, SO2C, FLOW ,	200 percent of the full-scale range setting (or diluent cap for O_2) when there is full-scale exceedance of high range. These hours are included in missing data lookback and are treated as available hours for percent availability calculations.

(cont.)

Table 19
MODC Codes and Descriptions for MHV (cont.)

Code	Parameters	Description
21	CO2C, H2O, NOXC, SO2C	Negative Hourly Average Concentration Replaced with Zero.
22	NOXC, SO2C,	Concentration from a certified monitor at the control device inlet, when exhaust gases are routed through an unmonitored bypass stack, or when the outlet monitor is unavailable and proper operation of the emission controls is not verified. These hours are included in missing data lookback and are treated as available hours for percent availability calculations.
23	NOXC, SO2C	MPC when flue gases are routed through an unmonitored bypass stack. These hours are considered to be missing data hours.
24	NOXC	MEC of NO_x when flue gases are routed through an unmonitored bypass stack and the add-on NO_x emission controls are confirmed to be operating properly.
53	All	Other quality-assured methodologies approved through petition. These hours are included in the missing data lookback and are treated as available hours for percent monitor availability calculations.
54	All	Other quality-assured methodologies approved through petition by EPA. These hours are included in missing data lookback and are treated as unavailable hours for percent availability calculations.
55	All	Other substitute data approved through petition by EPA. These hours are not included in missing data lookback and are treated as unavailable hours for percent availability calculations.

SO_2 Concentration

When very low sulfur fuel is combusted, if a negative SO_2 concentration is replaced (in the Unadjusted Hourly Value field) with a value of zero ppm and the 2.0 ppm default SO_2 concentration is reported in the Adjusted Hourly Value field, report MODC "16," rather than "21" for that hour.

NO_x Concentration

Note that MODCs "06" through "12," "23," "24," and "55" apply only when a separately certified NOXC monitoring system is defined in the monitoring plan and is used to calculate NO_x mass and do not apply when only a NO_x-diluent monitoring system is defined.

CO_2 Concentration

MODCs "06" through "12" apply only when a CO_2 monitor is used for heat input rate or CO_2-mass determinations.

O_2 Concentration

MODCs "06" through "12" apply only when a separately certified O_2 monitoring system is defined in the monitoring plan and is used exclusively for heat input rate determinations in accordance with Equation F-17 or F-18 in Appendix F to Part 75.

Monitoring System ID
Element Name: *MonitoringSystemID*

For missing data substitution hours, leave this element blank. Note that hours in which the flue gases are discharged through an unmonitored bypass stack are considered to be missing data hours.

For quality-assured data hours, report the ID of the monitoring system from which the concentration or stack flow was recorded, as follows:

SO_2 Concentration

For quality-assured data hours, report the ID of the Monitoring System from which the concentration value was recorded. Also, report the SO_2 concentration Monitoring System ID for the monitoring system in use at the time of any of the following occurrences: (1) when you report the 2.0 ppm default value for an hour during which very low sulfur fuel (as defined in §72.2) is combusted and the bias-adjusted hourly average SO_2 concentration is below 2.0 ppm; or (2) when you use a default high range value of 200 percent of the MPC in the calculation of the hourly average SO_2 concentration; or (3) when a full-scale exceedance of the high range occurs and you use a value of 200 percent of the range in the calculation of the hourly average SO_2 concentration. In these cases, the hours are treated as quality-assured monitor operating hours. Each of these occurrences is included in missing data lookback and is counted as an available hour for percent monitor data availability calculations.

If a like-kind replacement non-redundant backup analyzer is used during a period of maintenance or repair of the primary analyzer (see §75.20(d)), report the primary Monitoring System ID.

Volumetric Flow

If a full-scale exceedance occurs and you use a value of 200 percent of the range in the calculation of the hourly average flow rate, report the Monitoring System ID of the monitoring system which is in use at the time of the occurrence. Treat such hours as though they are quality-assured monitor operating hours; include them in missing data lookback and count them as available hours for percent monitor data availability calculations.

NO_x Concentration

If the NO_x analyzer is only part of a NO_x emission rate system and not part of any NO_x concentration system, leave this field blank.

Otherwise, report the System ID for the NO_x concentration system.

When reporting a default high range value of 200 percent of the MPC or when reporting a value of 200 percent of the range during a full-scale exceedance of the high range, report the System ID of the monitoring system in use at the time of the occurrence of the full-scale exceedance.

If a like-kind replacement non-redundant backup analyzer is used during a period of maintenance or repair of the primary analyzer (see §75.20(d)), report the primary Monitoring System ID.

CO_2 Concentration

If the CO_2 analyzer is only part of a NO_x emission rate system, leave the System ID blank.

Otherwise, report the applicable System ID for the CO_2 monitoring system defined in the monitoring plan.

Report the Monitoring System ID of the monitoring system in use whenever a full-scale exceedance value of 200 percent of the range is used in the calculation of the hourly average CO_2 concentration. Treat such hours as though they are quality-assured monitor operating hours; include them in missing data lookback and count them as available hours for percent monitor data availability calculations.

If a like-kind replacement non-redundant backup analyzer is used during periods of maintenance and repair of the primary analyzer (see §75.20(d)), report the primary Monitoring System ID.

O_2 Concentration

If the O_2 analyzer is only part of a NO_x emission rate system (and/or an H_2O system), leave the System ID blank and use only component IDs to identify the origin of the O_2 concentration values. Otherwise, report the applicable System ID as follows:

(a) If the O_2 concentration is from an O_2 component of an O_2 monitoring system (used to determine hourly heat input rate), report the System ID for the O_2 monitoring system. (Note: the data will be QA'd by an O_2 RATA.)

(b) If the O_2 concentration is from an O_2 component that is part of a CO_2 monitoring system (used for determining CO_2 concentration, CO_2 mass, and hourly heat input rate), report the System ID for the CO_2 monitoring system. (Note: the data will be QA'd by a CO_2 RATA.)

(Note that when either the wet or the dry O_2 component is part of either an O_2 or CO_2 monitoring system, that component will be reported using the applicable monitoring system as described in (a) and (b) above.)

H_2O Concentration

Report the H_2O System ID for every quality-assured hour.

Component ID
Element Name: *ComponentID*

For each hour of quality-assured data from a CEMS or from a stack gas flow rate system (except for 2-component systems, as noted below), identify the component used during the hour. Leave this field blank when a quality-assured value from the CEMS is not available. Note that hours in which the flue gases are discharged through an unmonitored bypass stack are considered to be missing data hours.

If a temporary like-kind replacement analyzer is used during periods of maintenance and repair of the primary analyzer (see §75.20(d)), assign and report a unique Component ID number (beginning with the prefix "LK" as defined in the COMPONENT DATA record, e.g., "LK1") for the like-kind replacement analyzer. The like-kind replacement analyzer Component ID may be manually entered. Note that the LK component must also be identified in the monitoring plan as a monitoring component of the primary monitoring system, and a MODC of "17" must be reported for each hour in which the analyzer provides valid data.

If you determine hourly stack flow rate by averaging (or subtracting) the readings from two flow components which are identified as components of the same monitoring system, leave this field blank. If the hourly flow rate is a substitute data value, leave this field blank. This includes hours in which the flue gases are discharged through an unmonitored bypass stack.

Percent Available
Element Name: *PercentAvailable*

If applicable for the parameter, report the percent monitor data availability to one decimal place for each hour.

<u>SO_2 Concentration</u>

For units with add-on SO_2 emission controls:

(a) If you report the MPC for hours in which the flue gases are routed through an unmonitored bypass stack, or when the outlet SO_2 monitor is unavailable and proper operation of the emission controls is not verified, do not include these hours in the calculation of percent monitor data availability. Treat these hours as missing data hours.

(b) If you report data from a certified inlet monitor during hours in which the flue gases are routed through an unmonitored bypass stack, or when the outlet SO_2 monitor is unavailable and proper operation of the emission controls is not verified, include these hours in the missing data lookbacks and treat them as available hours in the PMA calculations.

<u>NO_x Concentration</u>

Report data in this field <u>only</u> if you use NO_x concentration times stack flow as the primary methodology for NO_x mass calculations for all hours. Report the percent monitor data availability for each hour.

CO_2 Concentration

Report percent monitor data availability for CO_2 concentration only when the CO_2 value is used for determining CO_2 mass rate or heat input rate.

O_2 Concentration

Report percent monitor data availability for O_2 concentration only when the O_2 value is used for determining heat input rate.

Moisture (H_2O)

If you use the standard moisture missing data procedures in §75.37, which are based on percent availability, calculate and report the moisture percent data availability for each operating hour.

Moisture Basis
Element Name: *MoistureBasis*

Leave this field blank unless you use wet and dry O_2 values to determine hourly moisture.

Since you are required to report separate hourly MHV records for each parameter (i.e., for wet basis O_2 and dry basis O_2). report one of the following uppercase codes to indicate the moisture basis of the hourly O_2 reading.

Table 20
Moisture Basis Codes and Descriptions for MHV

Code	Description
D	Dry
W	Wet

2.5.1.1 MATS MONITOR HOURLY VALUE DATA

MATS MONITOR HOURLY VALUE DATA XML Model

Figure 12
MATS Monitor Hourly Value Data XML Elements

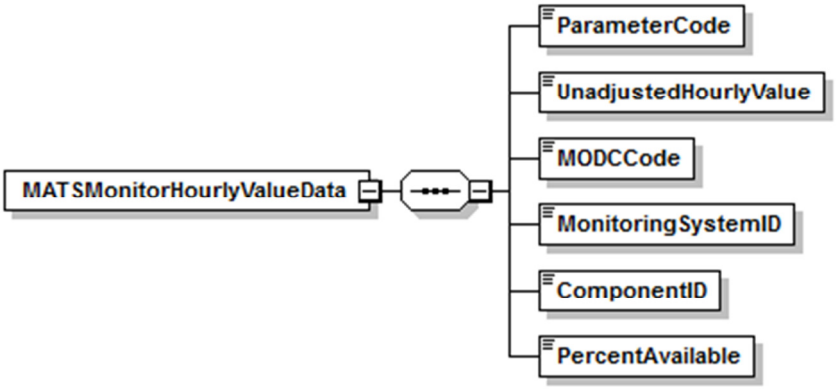

MATS MONITOR HOURLY VALUE DATA Overview

Description of Data

If your EGU is subject to the MATS Rule (40 CFR Part 63, Subpart UUUUU), use the MATS MONITOR HOURLY VALUE DATA (MMHV) record to report each parameter (i.e., hazardous air pollutant (HAP)) that is measured by a continuous emission monitoring system (CEMS) or a sorbent trap monitoring system. The monitored parameters may include Hg concentration, HCl concentration, and/or HF concentration. These instructions contain a subsection for each measured parameter, in order to give specific direction on how to report for that parameter.

(Note: If you use the low-emitting EGU (LEE) methodology for Hg, you are not required to report hourly Hg concentration data).

Hg Concentration

If you measure the hourly average Hg concentration using a CEMS or sorbent trap monitoring system, report a MMHV record for each hour of unit operation-- including hours when a quality-assured Hg concentration value is not obtained.

There are no missing data substitution requirements or bias adjustment requirements for Hg concentration in Appendix A of Subpart UUUUU.

HCl and HF Concentration

If your EGU is subject to the MATS rule and you measure the hourly average HCl and/or HF concentration using CEMS, report a MMHV record for each hour of unit operation-- including hours when a quality-assured HCl or HF concentration value is not obtained.

There are no missing data substitution requirements or bias adjustment requirements for HCl or HF concentration in 40 CFR 63, Subpart UUUUU, Appendix ~~A~~B.

The MMHV elements to be reported are summarized in Table 21, below:

Table 21
MMHV Elements for HGC, HCLC and HFC

MMHV Elements to Report	Measured	Unavailable
Parameter Code	✓	✓
Unadjusted Hourly Value	✓	
MODC	✓	✓
Monitoring System ID	✓	
Component ID	✓	
Percent Available	✓	✓

MATS MONITOR HOURLY VALUE DATA XML Elements

Parameter Code
Element Name: *ParameterCode*

Report the Parameter Code that corresponds to the parameter monitored at the location defined by the Stack Pipe ID or Unit ID. Use the appropriate uppercase code as shown in Table 22.

Table 22
Parameter Codes and Descriptions
for the MMHV Data Record

Code	Description
HGC	Hg Concentration (µg/scm)
HCLC	HCl concentration (ppm)
HFC	HF concentration (ppm)

Unadjusted Hourly Value
Element Name: *UnadjustedHourlyValue*

Report the unadjusted concentration for the hour. See below for parameter-specific instructions.

Hg Concentration

Report the quality-assured, unadjusted Hg concentration for the hour (obtained with an Hg CEMS or sorbent trap monitoring system, as applicable), expressed in µg/scm and rounded to three significant figures using scientific notation. For example, "0.0144 µg/scm" should be reported as "1.44E-2". The "E" ~~should~~ must be capitalized and the field ~~should~~ must not contain spaces in-between the characters. Report only one figure to the left of the decimal point. For sorbent trap monitoring systems, report the same Hg concentration value for each hour of the sample collection period, except for "transition hours" and any hour(s) with insufficient data capture (see "Sorbent Trap Systems---Special Considerations", below).

Leave this field blank when a quality-assured Hg concentration value is not available.

HCl and HF Concentration

Report the quality assured, unadjusted HCl or HF concentration for the hour (as applicable) expressed in ppm, rounded to three significant figures using scientific notation, as shown above for Hg concentration. Leave this field blank when a quality-assured HCl or HF concentration value is not available.

MODC Code
Element Name: *MODCCode*

Report the appropriate method of determination code (MODC) to identify the type of monitoring system or value used to measure and report the Hg, HCl, or HF concentration for the hour. For CEMS, entry of MODCs "17" and "21" is permitted. For sorbent trap monitoring systems, entry of MODCs 01, 02, 32, 33, 34, 35, 41, and 42 is permitted. EPA has reserved codes "01" through "55." Codes "56" through "99" may be used by vendors and companies for other purposes but must not be reported in a quarterly report.

Table 23
MODC Codes and Descriptions for MMHV

Code	Parameters	Description
01	All	Primary Monitoring System
02	All	Redundant Backup or Regular Non-Redundant Backup Monitoring System
17	HGC, HCLC, HFC	Temporary Like-Kind Replacement Analyzer (CEMS, only)
21	HGC, HCLC, HFC	Negative Hourly Average Concentration Replaced with Zero (CEMS, only)

Cont.

Table 23
MODC Codes and Descriptions for MMHV(cont.)

Code	Parameters	Description
32	HGC	Hourly Hg concentration determined from analysis of a single sorbent trap multiplied by a factor of 1.111
33	HGC	Hourly Hg concentration determined from the sorbent trap with the higher Hg concentration (relative deviation criterion for the paired traps is not met)
41	HGC	Hourly Hg concentration determined from ~~one or more~~two different pairs of sorbent traps ~~present~~ during the hour. This code applies only to~~R~~ routine sorbent trap change outs during normal, day-to-day operation of the sorbent trap monitoring system ~~not related to RATA performance testing~~.
42	HGC	Hourly Hg concentration determined from ~~one or more~~ two different pairs of sorbent traps ~~present~~ during the hour. This code applies only to~~S~~ sorbent trap change outs that occur ~~conducted as part of~~during -RATA ~~performance~~ test~~ing~~ periods.
34	HGC, HCLC, HFC	Hourly Hg, HCl, or HF concentration ~~not measured~~ missing or ~~monitored due to a problem with the monitoring system~~invalid
35	HGC, HCLC, HFC	Hourly Hg, HCl, or HF concentration not ~~measured or~~ monitored (flue gases routed through an unmonitored bypass stack)

Hg, HCl, and HF Concentration

For an Hg, HCl, or HF CEMS or sorbent trap system, report all valid hourly concentration values using a MODC of "01" (or "02" if the CEMS is a backup system).

If the hourly concentration is unavailable or invalid, report MODC "34" in the MMHV record for concentration and MODC "38" in the MDHV record for emission rate.

For sorbent trap monitoring systems, report the same MODC for each hour of the sample collection period except for "transition" hours when sorbent traps are changed out and data from ~~more than one~~ two different pairs of sorbent traps ~~was~~are used to calculate the Hg concentration. For routine trap change outs ~~not associated with RATA performance testing~~ during normal, day-to-day operation of the sorbent trap monitoring system, report an MODC of "41" to indicate quality assured data hours during trap change out. For trap change outs ~~associated with~~ that occur during RATA ~~performance~~ test~~ing~~ periods, report an MODC of "42" to indicate quality assured data hours during RATA ~~performance~~ testing. ~~.~~

Monitoring System ID
Element Name: *MonitoringSystemID*

For quality-assured data hours, report the ID of the monitoring system from which the Hg, HCl, or HF concentration value was determined. Leave this field blank when a quality-assured Hg, HCl, or HF concentration value is not available.

If a temporary like-kind replacement analyzer is used during a period of maintenance or repair of the primary Hg, HCl, or HF analyzer, report the primary monitoring system ID for each hour of quality-assured data obtained with the replacement analyzer.

Component ID
Element Name: *ComponentID*

For each hour of quality-assured data from a Hg, HCl, or HF CEMS, identify the component used during the hour. Leave this field blank when a quality-assured value from the CEMS is not available. For sorbent trap monitoring systems, leave this field blank for all operating hours. Note that hours in which the flue gases are discharged through an unmonitored bypass stack are considered to be data unavailable hours.

If a temporary like-kind replacement analyzer is used during periods of maintenance and repair of the primary analyzer~~ (see §75.20(d)),~~, assign and report a unique Component ID number (beginning with the prefix "LK" as defined in the COMPONENT DATA record, e.g., "LK1") for the like-kind replacement analyzer (see section 2.2.3 of Appendix A and section 2.2 of Appendix B to Subpart UUUUU). The like-kind replacement analyzer Component ID may be manually entered. Note that the LK component must also be identified in the monitoring plan as a monitoring component of the primary monitoring system, and a MODC of "17" must be reported for each hour in which the analyzer provides valid data.

Percent Available
Element Name: *PercentAvailable*

You must calculate and report the percent monitor data availability (PMA) for Hg, HCl, or HF concentration (as applicable) according to §75.32, for both Hg CEMS and sorbent trap monitoring systems (see Subpart UUUUU, Appendix A, sections 7.1.3.5, 7.1.4.8, and 7.2.5.3.3 and Appendix B, section 10.1.3.5). Hours with reported MODC values of 32 or 33 are "data available" hours for Hg concentration. Hours with reported MODC values of 34 and 35 are "data unavailable" hours.

Sorbent Trap Systems---Special Considerations

The MATS rule allows sorbent trap monitoring systems (STMS) to be used as an alternative to Hg CEMS, to continuously monitor Hg concentration. Because a STMS functions as a continuous monitoring system, the system must capture sufficient data to validate each operating hour. The minimum data capture requirements of 40 CFR 60.13(h)(2), which apply to Hg CEMS, are therefore appropriate for a STMS.

Consistent with §60.13(h)(2), the minimum data capture requirement for a STMS is that the flue gas must be sampled for at least one minute in each 15-minute quadrant of the hour in which the unit operates (i.e., combusts fuel), except as follows. For operating hours in which mandatory QA tests are performed, if the unit operates in 2, 3, or 4 quadrants of the hour, the hour is considered valid if the STMS samples the flue gas in two quadrants (call them “A” and “B”), with a minimum separation of 15 minutes between a data point (i.e., a clock minute in which sample is collected) in quadrant A and a data point in quadrant B.

The excepted operating hours (or partial hours) that require data in only two quadrants for validation include RATA test periods and "transition hours". A transition hour is an operating hour in which two different pairs of sorbent traps are used to sample the flue gas. One pair of traps is removed from service and a new pair of traps is brought into service, with a short time gap in-between. Mandatory leak checks of the traps are performed during transition hours.

For any transition hour in which sufficient data are captured to validate the hour, a time-weighted Hg concentration value should be calculated, as follows:

$$C_{trans} = \frac{C_1\, t_1 + C_2\, t_2}{t_1 + t_2}$$

Report the stack gas flow rate-to sample flow rate (SFSR) ratios for the "old" pair of traps that is removed from service in the transition hour. For the "new" pair of traps that is brought into service, determine the SFSR reference ratios in the next operating hour. See sections 2.5.4 and 2.7.1 for a further discussion of SFSR ratios.

Example Transition Hour

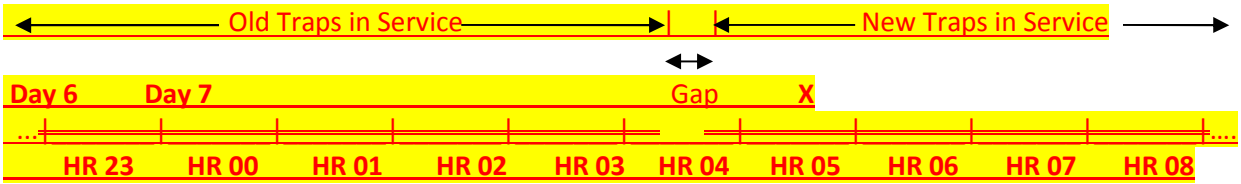

In the above example, a pair of sorbent traps (the "old" traps) has been in service, indicated by double strikethrough (═══), for 6 days and remains in service until operating hour 04 on Day 7. Operating hour 04 is a "transition hour", in which the old traps are used for 18 minutes and taken out of service. Then, after a short time gap (20 minutes) a "new" pair of traps is placed in service for the remainder of hour 04 (i.e., 22 minutes). The Hg concentration measured by the old traps is 1.50 µg/m^3 and the Hg concentration measured by the new traps is 2.50 µg/m^3. Operating hour 04 can be reported as quality-assured because Hg emissions were sampled for at least one minute in all four quadrants of the hour. Therefore, the time-weighted average Hg concentration for transition hour 04 is:

$$C_{trans} = \frac{C_1\, t_1 + C_2\, t_2}{t_1 + t_2} = \frac{[(1.50)(18) + (2.50)(22)]}{18 + 22} = 2.05 \ \ \mu g / m^3$$

The SFSR ratios from the old pair of traps are reported for hour 04. The reference SFSR ratios for the new pair of traps are established in hour 05 (marked "X").

The MATS rule requires relative accuracy test audits (RATAs) of sorbent trap monitoring systems to be performed annually. The sorbent trap monitoring system must be operated according to PS 12B during the RATA. A minimum of 9 test runs are required, using the same type of sorbent that is used for day-to-day operation of the system; however, the traps used for the RATAs may be

smaller than the ones used for daily operation (see sections 4.1.2.2 and 4.1.2.3 in Appendix A of the MATS Rule).

Because the RATA run times are generally short (ranging anywhere from 30 minutes to a few hours), it is likely that there will be some transition hours during the RATA test period. Also, there may be whole hours (gaps) in-between successive test runs, in which the flue gas is not being sampled. In view of these considerations, the following approach is recommended for reporting hourly Hg concentrations and SFSR ratios during a RATA test period:

- Define the start of the RATA test period as the date and time when the first test run begins.
- Define the end of the RATA test period as the date and time when the last test run ends.
- Establish reference SFSR ratios in the first RATA run. Then, determine SFSR ratios for each subsequent RATA run and compare them to the reference ratios.
- For any transition hour in the RATA test period, if sufficient data are captured to validate the hour, report the time-weighted Hg concentration as shown in the Example above, and report the SFSR ratios for the pair of traps that is removed from service.
- For any other operating hour (or partial hour) in the RATA test period, if sufficient data are captured to validate the hour, report the Hg concentration and SFSR ratios for the pair of traps that is in service
- If insufficient data are captured to validate any hour in the RATA test period, count it as an hour of monitoring system downtime.

Example Sorbent Trap Monitoring System RATA

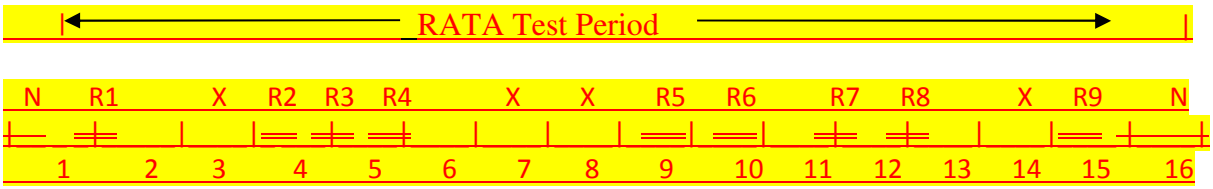

The diagram above illustrates a 15 hour period in which normal, day-to-day operation of a sorbent trap monitoring system (represented by "N" and single strikethrough (—)) is temporarily interrupted and a RATA of the system is performed. The nine RATA runs (R1 through R9) are represented using double strikethrough (═). There are 4 gaps in the test period, in which Hg emissions data are not collected (i.e., operating hours 3, 7, 8, and 14, marked with "X"). Assume that the monitoring system passes the RATA.

For emissions reporting purposes:

- Full (i.e., 60-minute) operating hours 1, 4, 5, 12, and 15 are "transition hours" in which one pair of traps is removed from service and a second pair of traps is brought into service. For these hours, report the time-weighted Hg concentration and report the SFSR ratios for the pair of traps that is removed from service. These hours are valid because Hg emissions

data are collected in at least 2 quadrants of the hour, with more than 15 minutes of separation between some of the data points (i.e., clock minutes) in those quadrants.

- Use the sample flow rate from the portion of run R1 in hour 2 of the RATA test period, together with the hourly average stack gas flow rate for hour 2, to establish the reference SFSR ratios for the RATA test period.

- Full operating hours 9 and 10 are not transition hours, and Hg emissions data are collected in 2 adjacent quadrants of each hour, with at least 15 minutes of separation between some of the data points in those quadrants. Therefore, for hours 9 and 10, report, respectively, the measured Hg concentrations and the SFSR ratios from runs R5 and R6.

- Hours 2 and 11 are full operating hours. However, Hg emissions data are collected only in one 15-minute quadrant of the hour. Count these two hours as monitoring system downtime.

- Hour 6 is a partial operating hour, in which the unit operates for the first 30 minutes of the hour, but Hg emissions data are collected only in the first 15-minute quadrant of the hour. Count this hour as monitoring system downtime.

- Hour 13 is a partial operating hour, in which the unit operates only for the first 18 minutes of the hour. Hg emissions data are collected for the entire 18 minute period. Since Hg emissions are sampled in 2 quadrants of the hour with at least 15 minutes of separation between some of the data points in the adjacent quadrants, report the Hg concentration and SFSR ratios from run R8 for hour 13.

- Hours 3, 8, and 14 are full operating hours, and hour 7 is a partial operating hour. Hg emissions data are not collected in any of these hours. Count these hours as monitoring system downtime.

2.5.2 DERIVED HOURLY VALUE DATA

DERIVED HOURLY VALUE DATA XML Model

Figure 13
Derived Hourly Value Data XML Elements

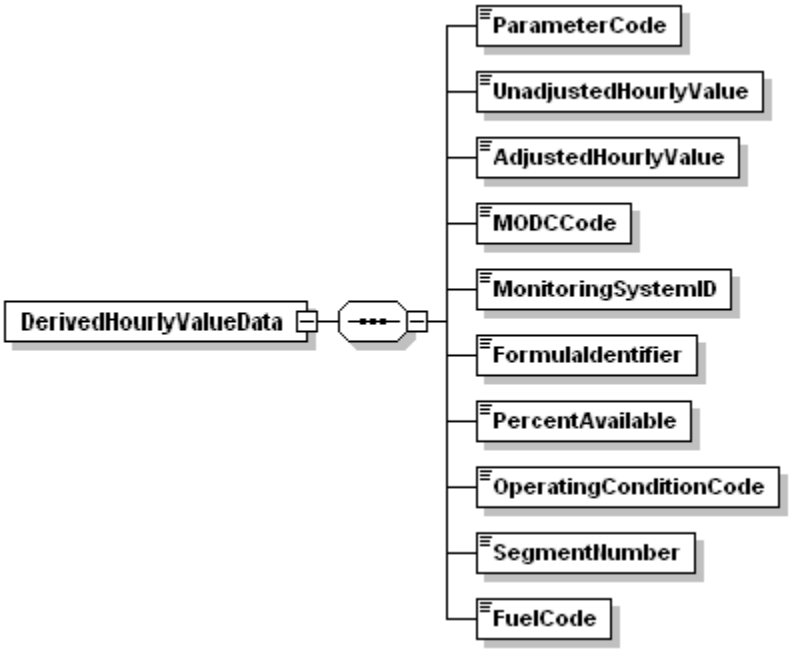

DERIVED HOURLY VALUE DATA Overview

Description of Data

Submit a DERIVED HOURLY VALUE DATA (DHV) record for each overall parameter value determined at this monitoring location for each operating hour (or partial hour). This includes emissions values calculated from continuous emissions monitoring (CEM) data, as well as the overall NO_x emission rate determined using Appendix E, the overall mass emission rates and heat input rate determined using Appendix D and Appendix G, and the hourly value for each parameter determined using the low mass emissions (LME) provisions. For hours in which the unit or stack did not operate, do not report this record. Derived emissions values include SO_2 mass (lb) or mass rate (lb/hr), NO_x emission rate, NO_x mass or mass rate, calculated H_2O concentration, calculated CO_2 concentration, Heat Input or Heat Input rate, and CO_2 mass or mass rate values. Reporting instructions for each of the derived parameters are described in detail below.

For CEM Methods

Derived Hourly Heat Input Rate (mmBtu/hr)

For each unit or stack with a stack flow monitor and diluent monitor, report the calculated heat input rate in the AdjustedHourlyValue element of a DHV record. If you monitor heat input rate and report this record at a common stack, also apportion the heat input rate measured at the common stack to the individual units (i.e., report additional DHV records for heat input rate under the associated Unit IDs). If you monitor heat input rate and report this record at multiple stacks, also report the heat input rate for the unit in an additional DHV record.

Derived SO_2 Hourly Mass Emission Rate (lb/hr)

For each unit or stack with an SO_2 CEMS (or using the F23 methodology per §75.11(e)(1)), report the calculated SO_2 mass emission rate in the AdjustedHourlyValue element of a DHV record.

If you monitor SO_2 mass emission rate and report this record at a common stack, do not apportion the SO_2 mass emission rate measured at the common stack to the individual units (i.e., do not report any additional DHV records under the associate Unit IDs).

If, for a particular unit, you monitor SO_2 mass emission rate at multiple stacks (or ducts), do not report the combined SO_2 mass emission rate for the unit (i.e., do not report any unit-level DHV records).

Derived NO_x Hourly Emission Rate (lb/mmBtu)

For each unit or stack with a NO_x emission rate CEMS, report the calculated NO_x emission rate in the UnadjustedHourlyValue element and the bias-adjusted emission rate in the AdjustedHourlyValue element of a DHV record. If you monitor NO_x emission rate and report this record at a common stack, do not apportion the NO_x emission rate measured at the common stack to the individual units (i.e., do not report any additional DHV records under the associated Unit IDs).

If, for a particular unit, you monitor NO_x emission rate at multiple stacks (or ducts), calculate the heat-input weighted hourly emission rate for the unit, but do not report those hourly unit level values (i.e., do not report any unit-level DHV records for NO_x emission rate). Rather, only use them to calculate the quarterly and cumulative NO_x emission rates for the unit. Report these quarterly and cumulative values in the unit-level SUMMARY VALUE DATA record.

For a combined-cycle turbine that uses a multiple-stack configuration, report separate stack-level DHV records for each hour in which there is both main stack and bypass stack operating time. Then, calculate a time-weighted unit-level NO_x emission rate for each hour, as described in the SUMMARY VALUE DATA record instructions. Store, but do not report, these time-weighted, hourly unit-level emission rates. Rather, only use them to calculate the quarterly and cumulative unit-level NO_x emission rates.

For Derived NO_x Mass Emission Rate (lb/hr)

For each unit, stack, or pipe at which NO_x mass emissions are measured or estimated, submit a DHV record, for every hour in the reporting period that the unit or stack operates.

If you monitor NO_x mass emissions and report this record at a common stack, do not apportion the NO_x mass emissions measured at the common stack to the individual units (i.e., do not report any additional DHV records under the associated Unit IDs).

If, for a particular unit, NO_x mass emissions is monitored at multiple stacks (or ducts), do not report the combined hourly NO_x mass emissions for the unit (i.e., do not report any unit-level DHV records for NO_x mass rate).

Derived CO_2 Mass Emission Rate (tons/hr)

For any operating hour (or partial hour) for each unit, stack, or pipe at which CO_2 emissions are monitored using CEMS, including the use of O_2 CEMS, report CO_2 mass emission rate in a DHV record.

If you monitor CO_2 mass emission rate and report this record at a common stack, do not apportion the CO_2 mass emission rate measured at the common stack to the individual units (i.e., do not report any additional DHV records under the associated unit IDs).

If, for a particular unit, CO_2 mass emission rate is monitored at multiple stacks (or ducts), do not report the combined CO_2 mass emission rate for the unit (i.e., do not report any unit-level DHV records).

Derived CO_2 Concentration

For any operating hour (or partial hour) for each unit or stack at which CO_2 concentration is determined by calculating it from O_2 readings, report the derived CO_2 concentration value for each operating hour or partial operating hour in this record. Note that measured CO_2 concentration from a CO_2 system utilizing a CO_2 monitor should be recorded in the MONITOR HOURLY VALUE DATA (MHV) record.

Derived H_2O (Moisture) Value

For any operating hour (or partial hour) for each unit or stack at which moisture is determined by calculating it from wet and dry O_2 readings, report the derived moisture value for each operating hour or partial operating hour in this record.

- Note that measured H_2O values from a moisture sensor or a temperature sensor and look-up table, if reporting for saturated gas streams, should be reported in the MHV record.

If you use a fuel-specific default moisture value, as allowed under §75.11 or §75.12 (for coal and wood-burning units and natural gas-fired boilers) and you have just one default value defined in your monitoring plan, do not report a MHV record or a DHV record on an hourly basis.

However, if you have more than one active fuel-specific default moisture value defined in your monitoring plan, report the fuel-specific or pro-rated moisture value used in your emissions calculations in an H_2O DERIVED HOURLY VALUE DATA record with a Method of Determination Code (MODC) of "40" on an hourly basis.

Derived SO_2 Hourly Emission Rate ---Equation F-23 (lb/mmBtu)

If you are using the F23 methodology to calculate the SO_2 mass rate per §75.11(e)(1) and you have defined more than one fuel-specific SO_2 emission rate default value in your monitoring plan, report the fuel-specific or pro-rated default value used in your emissions calculations in an SO2R DERIVED HOURLY VALUE DATA record with an MODC of "40" on an hourly basis.

Appendix D Methods

Heat Input

If you use Appendix D fuel flowmetering to determine heat input, report the heat input rate calculated for each fuel in the appropriate HOURLY PARAMETER FUEL FLOW DATA records. In addition, report the total heat input rate for the hour in a DHV record for the location. (You must report this record even if only one fuel was combusted during the hour.) If the fuel flowmetering is at a common pipe, also report the apportioned hourly heat input rate in a DHV record for each unit that is part of the common pipe.

SO_2

If you use Appendix D fuel flowmetering to determine SO_2, report the SO_2 mass emission rate calculated for each fuel in the appropriate HOURLY PARAMETER FUEL FLOW DATA record. In addition, report the total SO_2 mass emission rate for the hour in a DHV record for the location. (You must report this record even if only one fuel was combusted during the hour.) If the fuel flowmetering is at a common pipe, do not report hourly apportioned SO_2 for the units.

Appendix G Method for Hourly CO_2

If you use Equation G-4 to determine hourly CO_2, report the CO_2 mass emission rate calculated for each fuel in the appropriate HOURLY PARAMETER FUEL FLOW DATA record. In addition, report the total CO_2 mass emission rate for the hour in a DHV record. (You must report this record even if only one fuel was combusted during the hour.)

Appendix E Method for Hourly NO_x Emission Rate

If you use Appendix E to determine NO_x emission rate, report the overall NO_x emission rate for the hour in a DHV record. If you burn a single, consistent blend of fuels and established a single Appendix E curve for that fuel blend, report all the Appendix E related information in this DHV record. If you established a separate Appendix E curve for each fuel, report the fuel-specific NO_x emission rate data in the appropriate HOURLY PARAMETER FUEL FLOW DATA record and in addition, report the overall NO_x emission rate for the hour in a DHV record. (You must report this record even if only one fuel was combusted during the hour.)

Hourly NO_x Mass Rate Based on Appendix D Heat Input Rate

If you are required to report NO_x mass rate, calculate this value from the heat input rate and NO_x emission rate reported in the DHV record and report it in a DHV record.

LME Methods

For each parameter reported using the LME method, report a DHV record for each operating hour.

DERIVED HOURLY VALUE DATA XML Elements

Parameter Code

Element Name: *ParameterCode*

Report the appropriate Parameter Code as shown in Table 24.

Table 24
Parameter Codes and Descriptions for the DHV DATA Record

Code	Description
CO2	CO_2 Hourly Mass Emission Rate (tons/hr)
CO2C	CO_2 Concentration (derived from O_2 measurements) (%CO_2)
CO2M	CO_2 Hourly Mass (tons) (LME)
H2O	Moisture (from wet/dry O_2 measurements) (%H_2O)
HI	Heat Input Rate (mmBtu/hr)
HIT	Heat Input Total (mmBtu) (LME)
NOX	NO_x Hourly Mass Emission Rate (lb/hr)
NOXM	NO_x Hourly Mass (lb) (LME)
NOXR	NO_x Emissions Rate (lb/mmBtu)
SO2	SO_2 Hourly Mass Rate (lb/hr)
SO2M	SO_2 Hourly Mass (lb) (LME)
SO2R	SO_2 Hourly Emission Rate (lb/mmBtu) ---Equation F-23

Unadjusted Hourly Value

Element Name: *UnadjustedHourlyValue*

Report the unadjusted derived hourly value for the parameter specified, as follows:

NO_x Emission Rate from CEM

Calculate and report the NO_x emission rate (lb/mmBtu) based on the unadjusted NO_x concentration and unadjusted diluent (CO_2 or O_2) concentration recorded in the MHV record. Report the resulting value to the appropriate number of decimal places in Table 20. For hours in which you use missing data procedures leave this field blank, including hours in which the flue gases are discharged through an unmonitored bypass stack.

If you use Equation 19-3 or 19-5 to determine NO_x emission rate, you must use modified Equation 19-3D or 19-5D (as applicable) instead of Equation 19-3 or 19-5, for hours in which you use the diluent cap (see Table 29 in the MONITORING FORMULA DATA record in the Monitoring Plan Reporting Instructions).

All Other Parameters

Leave this field blank.

Adjusted Hourly Value
Element Name: *AdjustedHourlyValue*

Report the adjusted or "final" derived hourly value for the parameter specified.
SO_2 Mass Emission Rate (lb/hr)

For CEM methods, this value is normally derived using the bias-adjusted stack flow and the bias-adjusted SO_2 concentration (each reported in the MHV record), in conjunction with the appropriate equation in Appendix F to Part 75. However, for an hour in which a very low sulfur fuel (see §72.2) is combusted, the value may be calculated from a CEMS-derived heat input rate (i.e., from monitored stack flow rate, and diluent (CO_2 or O_2) concentration) and a default SO_2 emission rate using Equation F-23 (see §75.11(e)(1)).

For Appendix D units and pipes, report the total SO_2 mass emission rate for the location in this field. Use formula D-12 to combine SO_2 mass emission rates from multiple fuels (as reported in HOURLY PARAMETER FUEL FLOW).

Report all data for this element in lb/hr and to the appropriate number of decimal places per Table 20.

NO_x Mass Emission Rate (lb/hr)

If you use NO_x concentration times stack flow rate to determine NO_x mass emissions, use the bias-adjusted stack flow and the bias-adjusted NO_x concentration, (each reported in the MHV record), in conjunction with the appropriate equation in Appendix F to Part 75. If instead, NO_x mass emissions are calculated from the NO_x emission rate times heat input rate, use the adjusted NO_x emission rate and adjusted heat input values as reported in the DHV record for each parameter. Report data for this element in lb/hr and to the appropriate number of decimal places per Table 20.

NO_x Emission Rate (lb/mmBtu)

CEM Systems. For each hour in which you report NO_x emission rate in the Unadjusted Hourly Value element, apply the appropriate adjustment factor (1.000 or bias adjustment factor (BAF)) to the rounded average NO_x emission rate and report the adjusted NO_x emission rate for the hour. Report the resulting value to the appropriate number of decimal places per Table 20. Report the appropriate substitute data value for NO_x emission rate for each hour that a quality-assured emission rate is not obtained, including hours in which the flue gases are discharged through an unmonitored bypass stack. Do not leave this field blank.

Note that for an initial certification, analyzer replacement, or complete monitoring system replacement (as indicated by reporting a QA CERTIFICATION EVENT record with an Event Code of 100, 101, 120, 125, 151, 250, 255, 300 or 305), if you are using conditional data validation, the BAF is uncertain during the conditional data period. Therefore, apply a BAF of 1.000 from the beginning of the conditional data validation period to the completion hour of the certification or recertification RATA. For any other events that require a RATA, apply the BAF from their previous RATA during the conditional data period, unless that RATA failed or was aborted, in which case use 1.000.

For a combined-cycle combustion turbine (CT) using a multiple-stack configuration to report NO_x emission rate, use missing data substitution for any transition hour (i.e., an hour during which gases flow through both stacks), if either the main stack or bypass monitoring system is out of service, and draw the appropriate substitute data value from the bypass stack data pool.

If a full-scale exceedance of the low NO_x range occurs and you use a default high range value of 200 percent of the MPC in the calculation of the hourly average NO_x concentration reported in the MHV record, or if a full-scale exceedance of the high NO_x range occurs and you use a value of 200 percent of the range in the calculation of the hourly average NO_x concentration reported in the MHV record, use the reported NO_x concentration in conjunction with the quality-assured diluent concentration for the hour to calculate and report the NO_x emission rate. These hours are treated as quality-assured monitor operating hours; they are included in missing data lookback and are treated as available hours for percent monitor data availability calculations.

If a diluent concentration is unavailable during an hour in which a full scale exceedance of the NO_x analyzer occurs or an hour in which the default high range value is used, the NO_x emission rate for the hour is considered to be missing. In that case, do not report Monitor Hourly Value for NO_x concentration for this hour since the NO_x emission rate cannot be calculated; instead, report the maximum potential NO_x emission rate (MER) in this field, and use an MODC of "25."

Appendix E Systems. Report the overall NO_x emission rate for the unit to the appropriate number of decimal places per Table 20. If this value was determined from a consistent fuel mix curve, also report the appropriate System ID for the Appendix E NO_x system. If a single fuel curve or curves were defined, report the fuel-specific NO_x emission rate in the appropriate PARAMETER FUEL FLOW DATA record(s), and report the combined NO_x emission rate for the unit in this record.

CO_2 Concentration (Derived from O_2 Concentration) (pct)

Report the CO_2 Concentration for the hour to the appropriate number of decimal places per Table 20. This is either the value calculated from a quality-assured O_2 concentration value (as reported in the MHV record), or the appropriate substitute data value, as specified in §75.35.

CO_2 Mass Emission Rate (tons/hr)

If you are using CEMS, this value is derived using the bias-adjusted stack flow and either the unadjusted CO_2 concentration reported in the MHV record (if you are using a CO_2 analyzer), or the CO_2 Concentration reported in the DHV record (if you are using an O_2 analyzer), in conjunction with the appropriate equation in Appendix F to Part 75.

For units using Appendix G, calculate and report, in PARAMETER FUEL FLOW DATA record(s), the CO_2 mass emissions (tons/hr) for each fuel separately using Equation G-4. Then use Equation G-4A (see Table 32, MONITORING FORMULA DATA record in the Monitoring Plan Reporting Instructions) to determine the combined CO_2 mass emission rate for the hour. Report the combined hourly CO_2 mass emission rate (tons/hr) in this field in the DHV record.

Report this element in tons per hour and to the appropriate number of decimal places per Table 20.

H_2O (Moisture) (pct)

Report moisture for the hour, expressed in $\%H_2O$, rounded to one decimal place. Report the appropriate substitute data value for hours in which a quality-assured moisture percentage is unavailable or for hours in which the flue gases are discharged through an unmonitored bypass stack.

Heat Input (HI) Rate (mmBtu/hr)

Report this value in mmBtu per hour (mmBtu/hr) and to the appropriate number of decimal places per Table 20. If you use CEMS to determine hourly heat input rate, calculate the hourly rate using the diluent gas concentration, bias-adjusted hourly stack flow rate, percent moisture (if appropriate), and F-factor.

If you measure and report heat input rate at a common stack or pipe, also apportion and report heat input rate at the unit level. This apportionment should be based on megawatts, steam load, or fuel flow rate, using Equation F-21A, F-21B, or F-21D in Appendix F to Part 75, as applicable. These formulas use time-weighted hourly load to apportion the heat input rate measured at a common stack to the individual units.

For each hour, the sum of the individual heat inputs in mmBtu (i.e., the sum of the individual unit heat input rates, each multiplied by the corresponding unit operating time) must equal the total common stack heat input in mmBtu (i.e., the common stack heat input rate multiplied by the common stack operating time).

For a unit with a multiple stack configuration, with flow rate and diluent monitors on each stack, calculate the hourly heat input rate for the unit using Equation F-21C in Appendix F to Part 75. Also use Equation F-21C for multiple pipe configurations.

For each hour, the total unit heat input in mmBtu (i.e., the unit heat input rate multiplied by the unit operating time) must equal the sum of the individual stack (or pipe) heat inputs in mmBtu (i.e., the sum of the individual stack (or pipe) heat input rates, each multiplied by the corresponding stack (or pipe) operating time).

For Appendix D units combusting multiple fuels, report the hourly heat input rate calculated from all fuels in the DHV record. Report this record even if only one fuel was combusted during the hour.

For non-Acid Rain NO_x Budget Program units that use NO_x concentration times stack flow as the primary methodology to calculate NO_x mass emissions, report the hourly heat input rate unless you are specifically exempted (e.g., by a State SIP) from reporting it for allocation purposes. However, you must report unit operating time and load (except for non load-based units) for each hour in the HOURLY OPERATING DATA record, even if you are not required to report hourly heat input.

If, for any operating hour, the heat input rate is calculated to be less than one mmBtu/hr, substitute for that hour a value of one mmBtu/hr. Use an MODC of "26" for any such hours. This applies only to monitoring locations where CEMS are installed (i.e., where HI Rate is calculated using equation F-15, F-16, F-17, or F-18.) This does not apply to HI Rate calculated through Appendix D or apportionment.

In the rare event no units attached to the common stack generated load (Load = 0) during the hour, heat input should be apportioned by operating time.

Total Heat Input (HIT) (mmBtu)

Report this value in mmBtu for LME units and to the appropriate number of decimal places per Table 20.

SO_2 Emission Rate (lb/mmBtu)

If you are using the F23 methodology to calculate the SO_2 mass rate per §75.11(e)(1) and you have defined more than one fuel-specific SO_2 emission rate default value in your monitoring plan, report the fuel-specific or pro-rated default value in lb/mmBtu. Report the value to the appropriate number of decimal places per Table 20.

LME Units

Report the value for each required parameter as total mass (or heat input) for the hour. Report each value to the appropriate number of decimal places per Table 20.

Table 25
Precision of Reported Values for
DERIVED HOURLY VALUE DATA

Parameter Codes		Required Precision
CO2, CO2C, CO2M, H2O, HI, HIT, NOX, NOXM, SO2M		One decimal place
SO2	For CEM and Appendix D burning only oil during hour	One decimal place
SO2	Appendix D burning any gas during hour	Four decimal places
NOXR		Three decimal places
SO2R		Four decimal places

MODC Code
Element Name: *MODCCode*

For CEM methods for parameters CO2C, NOXR or H2O, report one of the following MODCs as shown in Table 26 to identify the monitoring system or missing data procedure used to report the derived value or when you were directed to report it for an approved alternative monitoring system. For parameter HI, use an MODC of "26" when the calculated Heat Input Rate is zero or negative and was therefore replaced with a value of 1.0. Report an MODC of "40" for parameters SO2R and H2O when a fuel-specific or pro-rated default value is used in determining the derived value.

For all other parameters, leave this field blank.

<u>NO_x Hourly Emission Rate</u>

Report an MODC of "14" when the diluent cap value for CO_2 or O_2 is used in place of the measured value reported in the MHV records. Also, be sure that you register the appropriate diluent cap value for the unit in the MONITORING DEFAULT DATA record in the monitoring plan. A diluent cap value can only be used for calculating NO_x emission rate during operating hours for which a quality-assured measured diluent (CO_2 or O_2) value is obtained.

For full-scale exceedances of a NO_x analyzer, EPA requires reporting of an MODC reflecting the monitoring system in use during the exceedance, or reporting an MODC of "25" if the diluent concentration normally reported in the MHV records is not quality-assured. Therefore, during full-scale exceedances, when 200 percent of MPC or 200 percent of range is reported for NO_x concentration in the MHV record and is used in conjunction with a quality-assured diluent gas concentration to calculate the NO_x emission rate, report the MODC code associated with the monitoring system that is in use at the time of the full-scale exceedance (for example, report "01" if the primary NO_x-diluent monitoring system is in use). If a full-scale exceedance of the NO_x analyzer occurs and no quality-assured diluent gas concentration for the hour is available, report an MODC of "25" for that hour. Manual entry of an MODC of "21" is permitted.

Table 26
MODC Codes and Descriptions for DHV

Code	Parameter(s)	Description
01	CO2C, NOXR, H2O	Primary Monitoring System (and Primary Bypass (PB) for NOXR).
02	CO2C, NOXR, H2O	Redundant Backup or Regular Non-Redundant Backup Monitoring System.
03	All	Approved Part 75 Alternative Monitoring System.
04	CO2C, NOXR, H2O	Reference Method Backup System.
05	NOXR	Part 75 Approved Parametric Method for Controlled Units.
06	CO2C, NOXR, H2O	Average Hour Before/Hour After.
07	CO2C, NOXR, H2O	Average Hourly Value, Initial Missing Data.
08	CO2C, NOXR	90th Percentile Value in Load Range in Lookback Period.
	H2O	90th or 10th Percentile Value in Load Range in Lookback Period.
09	CO2C, NOXR	95th Percentile Value in Load Range in Lookback Period.
	H2O	95th or 5th Percentile Value in Load Range in Lookback Period.
10	CO2C, NOXR	Maximum Hourly Value in Load Range in Lookback Period.
	H2O	Maximum or Minimum Hourly Moisture Percentage in Lookback Period.
11	NOXR	Average Hourly Rate in Load Range in Lookback Period.
12	CO2C, NOXR	Maximum Concentration or Emission Rate.
	H2O	Maximum or Minimum Potential moisture percentage.
13	NOXR	Maximum Controlled NO_x Emission Rate (MCR).
14	NOXR	Diluent Cap (if the cap is replacing a CO_2 measurement, it should be 5.0 percent for boilers and 1.0 percent for turbines; if it is replacing an O_2 measurement, it should be 14.0 percent for boilers and 19.0 percent for turbines.)
15	NOXR	1.25 times the NO_x Emission Rate at the corresponding load or operational bin, in the applicable lookback.
21	CO2C, H2O NOXR	A negative hourly value replaced with a zero.

(cont.)

Table 26
MODC Codes and Descriptions for DHV (cont.)

Code	Parameter(s)	Description
22	NOXR	NO_x Emission Rate calculated from a certified NO_x monitor at the control device inlet, when the outlet NO_x monitor is unavailable and proper operation of the emission controls is not verified. These hours are included in missing data lookback and are treated as available hours for percent availability calculations.
23	NOXR	Maximum Potential NO_x Emission Rate (MER) for an hour in which flue gases are discharged through an unmonitored bypass stack.
24	NOXR	MCR for an hour in which flue gases are discharged downstream of the NO_x emission controls through an unmonitored bypass stack, and the add-on NO_x emission controls are confirmed to be operating properly.
25	NOXR	MER. Use only when a NO_x concentration full-scale exceedance occurs and the diluent monitor is unavailable.
26	HI	One mmBtu/hr substituted for Heat Input Rate for an operating hour in which the calculated Heat Input Rate is zero or negative.
40	SO2R	Fuel-Specific or Pro-Rated SO_2 Emission Rate default value for use with Formula F-23.
	H2O	Fuel-Specific or Pro-Rated moisture default value.
45	HIT	Maximum Rated Hourly Heat Input Rate (used to determine heat input for LME units generally using long-term fuel flow method).
53	All	Other quality-assured methodologies approved through petition. These hours are included in the missing data lookback and are treated as available hours for percent monitor availability calculations.
54	All	Other quality-assured methodologies approved through petition by EPA. These hours are included in missing data lookback and are treated as unavailable hours for percent availability calculations.
55	All	Other substitute data approved through petition by EPA. These hours are not included in missing data lookback and are treated as unavailable hours for percent availability calculations.

* EPA has reserved MODCs "01" through "55." MODCs "56" through "99" may be used by vendors and companies for other purposes; do not report these codes in a quarterly report. MODCs "30" and "31" were defined in EDR v2.0 for Ozone Trading Commission (OTC) NBP units only and are no longer allowed.

Monitoring System ID

Element Name: *MonitoringSystemID*

Report the Monitoring System ID for the appropriate monitoring system that is providing quality-assured data for the hour. For missing data hours and hours in which the flue gases are discharged through an unmonitored bypass stack, leave this field blank. Also, leave this field blank for the calculated SO_2, NO_x, and CO_2 hourly mass emission rates.

If either: (1) a default high range NO_x concentration value of 200 percent of the MPC is reported due to a full-scale exceedance of the low range; or (2) a value of 200 percent of the range is reported during a full-scale exceedance of the high range, report the ID number of the NO_x-diluent monitoring system which is in use at the time of the full-scale exceedance.

For heat input records, report the Monitoring System ID for the O_2 or CO_2 system that provided the value used in the calculation. However, if missing data substitution was used in the MHV record, leave the System ID blank in this DHV record also. Table 22 below summarizes these requirements.

Table 27
System ID Reporting for Derived Hourly Values

Parameter Code	Description	System ID to Report
CO2	CO_2 Hourly Mass Rate	Leave blank.
CO2C	CO_2 Concentration (from an O_2 monitor)	CO_2 System ID.
H2O	Moisture (from wet/dry H_2O system)	H_2O System ID.
HI	Heat Input	CO_2 or O_2 System ID if CEM. Otherwise, leave blank.
NOX	NO_x Hourly Mass Rate from NO_x Concentration and Stack Flow	Leave blank.
	NO_x Hourly Mass Rate from NO_x Emissions Rate and Heat Input	Leave blank.
NOXR	NO_x Emissions Rate	NO_x System ID for CEM system or NOXE System ID for Appendix E mixed-fuel curve. Otherwise, leave blank.
SO2	SO_2 Hourly Mass Rate	Leave blank.

Formula Identifier
Element Name: *FormulaIdentifier*

Report the Formula ID from the MONITOR FORMULA DATA record that is used for the calculation of the parameter. Leave this field blank for missing data hours and for LME records. If you are using the Appendix D methodology to determine SO2, CO2, or Heat Input and burning multiple fuels for the hour, report the Formula ID from the MONITOR FORMULA DATA record with Formula Code D-12, G-4A, or D-15A respectively. If burning a single fuel for the hour, leave this field blank. If using multiple Appendix E curves to determine the NOx emission rate for the hour, report the Formula ID from the MONITOR FORMULA DATA record with Formula Code E-2. If using a single curve for the hour, leave this field blank.

Percent Available
Element Name: *PercentAvailable*

For NOXR from a CEM system, H2O, or CO2C, report the percent monitor data availability (PMA) to one decimal place for all hours. Do not report PMA for Heat Input Rate, SO_2, NO_x, or CO_2 hourly mass emission rates.

Operating Condition Code
Element Name: *OperatingConditionCode*

This field applies only to Appendix E NOXR data, LME NOXM data. For an Appendix E NO_x emission rate record (for a unit using one correlation curve for a consistent fuel mixture), report the appropriate code from Table 28 below to indicate the condition that was used to determine the NO_x emission rate for the hour.

See the instructions for this field in the HOURLY PARAMETER FUEL FLOW DATA record for details about when to report each operating condition code.

Table 28
Operating Condition Codes and Descriptions for DHV

Code	Description
B	Unit operated at base load or set point temperature (LME)
C	Controls Operating Properly (LME)
E	Emergency Fuel (Appendix E)
M	Correlation Curve for the Fuel Mixture has Expired (Appendix E)
N	Operating Parameter is Outside of Normal Limits (Appendix E)
P	Unit operated at peak load or higher internal operating temperature (LME)
U	Uncontrolled Hour (Appendix E or LME)
W	Operation Above Highest Tested Heat Input Rate Point on the Curve (Appendix E)
X	Operating Parameter Data Missing or Invalid (Appendix E)
Y	Designated Operational and Control Equipment Parameters within Normal Limits (Appendix E)
Z	Operation Below Lowest Tested Heat Input Rate Point on the Curve (Appendix E)

In the NOXM record for an LME unit that uses a fuel- and unit-specific default NO_x emission rate and has NO_x controls, indicate the status of the NO_x controls for the hour by reporting:

C = Controls Operating Properly
U = Unit Controls Not Operating or Not Operating Properly

In the NOXM record for an LME combustion turbine that operates principally at base load (or at a set point temperature) but is capable of operating at a higher peak load (or higher internal operating temperature), indicate for each operating hour whether operation was a base load (B) or peak load (P).

B = Unit operated at base load or set point temperature
P = Unit operated at peak load or higher internal operating temperature

For all other records, leave this field blank.

Segment Number
Element Name: *SegmentNumber*

For an Appendix E NO_x Emission Rate record (for a unit using one correlation curve for a consistent fuel mixture), report the Segment Number (1 – 4) indicating which portion of the correlation curve was used to determine the value for the hour. For operating condition codes N or X, report the segment number that contains the highest NO_x emission rate on the curve for the fuel. Leave this field blank if the correlation curve was not used for the hour (i.e., the Operating Condition Code is E, M, U, or W).

Fuel Code
Element Name: *FuelCode*

For LME units, report the type of fuel combusted in the hour. If multiple fuels are burned, report the fuel type used to determine the mass emissions for the parameter in this record (i.e., the fuel with the highest emission factor for the parameter). If records are missing as to which fuel was burned in the hour, report the fuel with the highest emission factor for this parameter of all of the fuels capable of being burned in the unit.

Table 29
Fuel Codes and Descriptions

Code	Description
BFG	Blast Furnace Gas
BUT	Butane (if measured as a gas)
CDG	Coal-Derived Gas
COG	Coke Oven Gas

(cont.)

Table 29
Fuel Codes and Descriptions (cont.)

Code	Description
DGG	Digester Gas
DSL	Diesel Oil
LFG	Landfill Gas
LPG	Liquefied Petroleum Gas
NNG	Natural Gas (as defined in §72.2)
OGS	Other Gas
OIL	Residual Oil
OOL	Other Oil
PDG	Producer Gas
PNG	Pipeline Natural Gas (as defined in §72.2)
PRG	Process Gas
PRP	Propane (if measured as a gas)
RFG	Refinery Gas
SRG	Unrefined Sour Gas

2.5.2.1 MATS DERIVED HOURLY VALUE DATA

MATS DERIVED HOURLY VALUE DATA XML Model

Figure 14
MATS Derived Hourly Value Data XML Elements

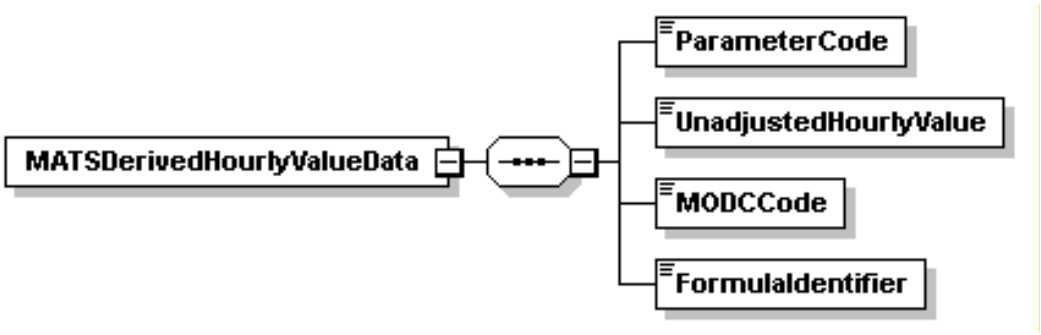

MATS DERIVED HOURLY VALUE DATA Overview

Description of Data

If your EGU is subject to the MATS Rule (40 CFR Part 63, Subpart UUUUU), submit a MATS DERIVED HOURLY VALUE DATA (MDHV) record for each calculated (derived) parameter value determined at the monitoring location for each operating hour. MATS derived hourly values include electrical output-based emission rates for SO_2, Hg, HCl, or HF, and heat input-based emission rates for SO_2, Hg, HCl, or HF. Reporting instructions for each of the derived parameters are presented below.

Derived SO_2 Hourly Emission Rates

If you seek to comply with the acid gas emissions reduction requirements of the MATS rule by continuously monitoring the heat input-based or electrical output-based SO_2 emission rate as a surrogate for HCl, you must calculate and report the hourly SO_2 emission rate in the appropriate units of measure (see Table 30) for each operating hour in which valid values are reported for the unadjusted SO_2 concentration and all of the auxiliary parameters that are needed to calculate the SO_2 emission rate.

For the electrical output-based emission rate, the auxiliary parameters needed to convert the SO_2 concentration to lb/MWh include stack gas flow rate, gross electrical load, and (if applicable) stack gas moisture content. For the heat input-based emission rate, the auxiliary parameters needed to convert the SO_2 concentration to lb/mmBtu include diluent gas (CO_2 or O_2) concentration and (if applicable) stack gas moisture content.

Use only quality-assured, unadjusted hourly average SO_2 concentrations, stack gas flow rates, diluent gas concentrations, and (if applicable) moisture values to calculate the SO_2 emission rates. Do not calculate the hourly SO_2 emission rate if Part 75 substitute data is used for any of the

auxiliary parameters. Also, do not calculate the electrical output-based emission rate if the electrical load for the operating hour is zero.

Note that default moisture percentages from Part 75 (if used) are not considered to be substitute data values. If the diluent cap is used in the calculation of the heat input-based emissions rate, the cap value is not considered to be substitute data.

For operating hours in which quality-assured data are not obtained for either the unadjusted SO_2 concentration or any essential auxiliary parameter(s), report a MDHV record, even though the SO_2 emission rate is not calculated for those hours (see the reporting instructions below for the "Unadjusted Hourly Value" field).

Derived Hourly Hg, HCl, or HF Emission Rates

If you seek to comply with the MATS rule by continuously monitoring the heat input-based or electrical output-based Hg, HCl, or HF emission rate, you must calculate and report in a MDHV record the hourly pollutant emission rate, in the appropriate units of measure (as shown in Table 30) for any operating hour in which sufficient valid data are obtained for the unadjusted Hg, HCl, or HF concentration, and for all other parameters needed to convert Hg, HCl, or HF concentration to the units of the emission standard (see 40 CFR 60.13(h)(2)).

For the electrical output-based emission rate, the auxiliary parameters needed to convert the Hg, HCl, or HF concentration to lb/GWh or lb/MWh (as applicable) include stack gas flow rate, gross electrical load, and (if applicable) stack gas moisture content. For the heat input-based emission rates, the auxiliary parameters needed to convert the Hg, HCl, or HF concentration to lb/TBtu or lb/mmBtu (as applicable) include diluent gas (CO_2 or O_2) concentration and (if applicable) stack gas moisture content.

Use only quality-assured, unadjusted hourly average Hg, HCl, and HF concentrations, stack gas flow rates, diluent gas concentrations, and (if applicable) moisture values to calculate the Hg, HCl, or HF emission rates. Do not calculate the hourly emission rate if Part 75 substitute data is used for any of the auxiliary parameters. Also, do not calculate the electrical output-based emission rate if the electrical load for the operating hour is zero.

Note that default moisture percentages from Part 75 (if used) are not considered to be substitute data values. If the diluent cap is used in the calculation of the heat input-based emissions rate, the cap value is not considered to be substitute data.

For operating hours in which quality-assured data are not obtained for either the unadjusted pollutant concentration (i.e., Hg, HCl, or HF, as applicable) or any essential auxiliary parameter(s), report a MDHV record, even though the emission rate is not calculated for those hours (see the reporting instructions below for the "Unadjusted Hourly Value" field).

MATS DERIVED HOURLY VALUE DATA XML Elements

Parameter Code
Element Name: *ParameterCode*

Report the appropriate Parameter Code as shown in Table 30

Table 30
Parameter Codes and Descriptions
for the MDHV Data Record

Code	Description
SO2RE	Electrical Output-Based Hourly SO2 Emission Rate (lb/MWh)
SO2RH	Heat Input-Based Hourly SO_2 Emission Rate (lb/mmBtu)
HGRE	Hg Electrical Output Based Emissions Rate (lb/GWh)
HGRH	Hg Heat Input Based Emissions Rate (lb/TBtu)
HCLRE	HCl Electrical Output Based Emissions Rate (lb/MWh)
HCLRH	HCl Heat Input Based Emissions Rate (lb/mmBtu)
HFRE	HF Electrical Output Based Emissions Rate (lb/MWh)
HFRH	HF Heat Input Based Emissions Rate (lb/mmBtu)

Unadjusted Hourly Value
Element Name: *UnadjustedHourlyValue*

Report the unadjusted derived hourly value for the parameter specified, as follows:

SO_2 Emission Rates

If your EGU has a single unit-single stack exhaust configuration and you seek to comply with the acid gas emissions reduction requirements of the MATS rule by continuously monitoring either the heat input-based SO_2 emission rate (lb/mmBtu) or the electrical output-based SO_2 emission rate as a surrogate for HCl, report the unadjusted SO_2 emission rate in a MDHV record for each operating hour in which quality-assured values are obtained and reported in MHV records for the unadjusted SO_2 concentration and for all of the auxiliary parameters needed to convert the SO_2 concentration to lb/mmBtu or lb/MWh (as applicable). For the calculation of electrical output-based emission rates, use only unadjusted hourly SO_2 concentrations and stack gas flow rates-- do not apply Part 75 bias adjustment factors to the SO_2 or flow rate data. Report the SO_2 emission rates to three significant figures using scientific notation, keeping only one digit to the left of the decimal point. For example, an SO_2 emission rate of 0.0756 lb/mmBtu would be reported as 7.56-E-2, with no spaces in-berween the characters.

Use appropriate equations from Table 28 of the ECMPS Monitoring Plan Reporting Instructions to determine the hourly lb/mmBtu or lb/MWh SO_2 emission rate. These equations must be defined in your electronic monitoring plan.

If the SO_2 concentration or any auxiliary parameter needed to calculate the SO_2 emission rate is either invalid or is a substitute data value, leave this field blank and report an MODC of "38".

If you seek to comply with the electrical output-based standard and the hourly electrical load is zero during unit operation, leave this field blank and report an MODC of "38".

If your affected EGU has a common stack or multiple stack exhaust configuration, see the "Specific Considerations for the MATS Rule" presented at the end of this section.

Hg, HCl, or HF Emission Rates

If your EGU has a single unit-single stack exhaust configuration and you seek to comply with the MATS rule by continuously monitoring either the heat input-based Hg, HCl, or HF emission rate (lb/TBtu or lb/mmBtu, as applicable) or the electrical output-based emission rate (lb/GWh or lb/MWh, as applicable), report the Hg, HCl, or HF emission rate in a MDHV record for each operating hour in which valid data are obtained and reported for the unadjusted Hg, HCl, or HF concentration (in a MMHV record) and for all of the auxiliary parameters needed to convert the pollutant concentration to the units of the emission standard (in MHV records). For the calculation of electrical output-based emission rates, use only unadjusted hourly stack gas flow rates-- do not apply Part 75 bias adjustment factors to the flow rate data. Report the Hg, HCl, or HF emission rates to three significant figures using scientific notation, keeping only one digit to the left of the decimal point. For example, an Hg emission rate of 0.000385 lb/GWh would be reported as "3.85-E-4" with no spaces between characters and the "E" capitalized.

Use appropriate equations from Table 33, 35, or 37 (as applicable) of the ECMPS Monitoring Plan Reporting Instructions to determine the hourly lb/mmBtu or lb/MWh Hg, HCl, or HF emission rate. These equations must be defined in your electronic monitoring plan.

If the Hg, HCl, or HF concentration or any auxiliary parameter needed to calculate the pollutant emission rate is either ~~unavailable~~ invalid or is a substitute data value, leave this field blank and report an MODC of "38".

If you seek to comply with the electrical output-based standard and the hourly electrical load is zero during unit operation, leave this field blank and report an MODC of "38".

If your affected EGU has a common stack or multiple stack exhaust configuration, see the "Specific Considerations for the MATS Rule" presented at the end of this section.

MODC Code
Element Name: *MODCCode*

For parameters HGRE, HGRH, HCLRE, HCLRH, HFRE, HFRH, SO2RE, or SO2RH, report an MODC of "36" or "37" (as appropriate) for hours in which the emission rate is able to be

calculated, and report "38" for hours in which the emission rate cannot be calculated. Entry of MODCs 36, 37, and 38 is permitted.

For all other parameters, leave this field blank.

Table 31
MODC Codes and Descriptions for MDHV

Code	Parameter(s)	Description
36	HGRE, HGRH,HCLRE, HCLRH, HFRE, HFRH, SO2RE, SO2RH	Hourly Hg, HCl, SO_2, or HF emission rate calculated-- valid data obtained for pollutant concentration and for all essential auxiliary parameters.
37	HGRH, HCLRH, HFRH, SO2RH,	Hourly heat input-based Hg, HCl, SO_2, or HF emission rate calculated for a startup or shutdown hour, using the diluent cap value.
38	HGRE, HGRH,HCLRE, HCLRH, HFRE, HFRH, SO2RE, SO2RH	Hourly Hg, HCl, or HF emission rate not calculated-- valid concentration not available or substitute data reported for one or more essential auxiliary parameters.

Formula Identifier
Element Name: *FormulaIdentifier*

Report the Formula ID from the MONITOR FORMULA DATA record that is used for the calculation of the parameter.

Leave this field blank for hours in which the Hg, SO_2, HCl, or HF emission rate is not calculated. For operating hours in which the heat input-based Hg, SO_2, HCl, or HF emission rate is calculated, report the formula ID corresponding to the EPA Method 19 equation used. For operating hours in which the electrical output-based Hg, SO_2, HCl, or HF emission rate is calculated, report the formula ID corresponding (as applicable) to either Equation A-2 or A-3 from Table 33 of the ECMPS Monitoring Plan Reporting Instructions (for Hg), Equation S-2 or S-3 from Table 29 (for SO_2), Equation HC-2 or HC-3 from Table 35 (for HCl), or Equation HF-2 or HF-3 from Table 37 (for HF).

Specific Considerations for the MATS Rule

For EGUs subject to the MATS Rule that have common stack configurations, you may monitor emissions concentration and the necessary auxiliary parameters at the common stack provided that all of the units sharing the stack are subject to the same emission limit (see 40 CFR 63.8(b)(2)(i)). If this monitoring option is implemented, do not apportion the hourly emission rate measured at the common stack to the individual units (i.e., do not report any additional MATS DERIVED HOURLY VALUE DATA records under the ID numbers of the units that share the common stack).

However, if the units sharing the common stack are not subject to the same emission standard, you must monitor the units individually to demonstrate compliance with the emission limits.

If, for a particular unit, hourly emissions rates are monitored at multiple stacks (or ducts) report the hourly emission rate measured at each stack (or duct) and an hourly heat input-weighted emission rate for the unit (i.e., report both stack (or duct)-level and unit-level MATS DERIVED HOURLY VALUE DATA records). However, do not calculate the unit-level emission rate for any operating hour in which a valid emission rate is not able to be calculated for all of the stacks (or ducts). Use the following equation to calculate the unit-level emission rates:

$$Hourly\ Unit\ \ Emission\ Rate = \frac{(Emission\ Rate)_A\,(Heat\ Input)_A + (Emission\ Rate)_B\,(Heat\ Input)_B}{(Heat\ Input)_A + (Heat\ Input)_B}$$

In the formula above, the term "Heat Input" for multiple stack A or B is the product of the hourly HI rate for the stack and the corresponding stack operating time. If more than two units share the stack, modify the equation appropriately.

If quality-assured data are not obtained for the unadjusted pollutant concentration (i.e., Hg, HCl, HF, or SO_2, as applicable) and/or for any essential auxiliary parameter(s) at a particular monitored location, do not calculate the emission rate at that location and leave the "Unadjusted Hourly Value" field blank.

(Note: Section 63.10010(a)(5)(iii) of Subpart UUUUU allows units with multiple stack or duct configurations to monitor the pollutant emission rate in one, rather than all, of the multiple stacks or ducts, provided that the measurements are representative of the emissions to the atmosphere. If your EGU qualifies for this monitoring option and you elect to implement it, treat it as a single unit-single stack configuration.)

2.5.3 HOURLY FUEL FLOW DATA

HOURLY FUEL FLOW DATA XML Model

Figure 15
Hourly Fuel Flow Data XML Elements

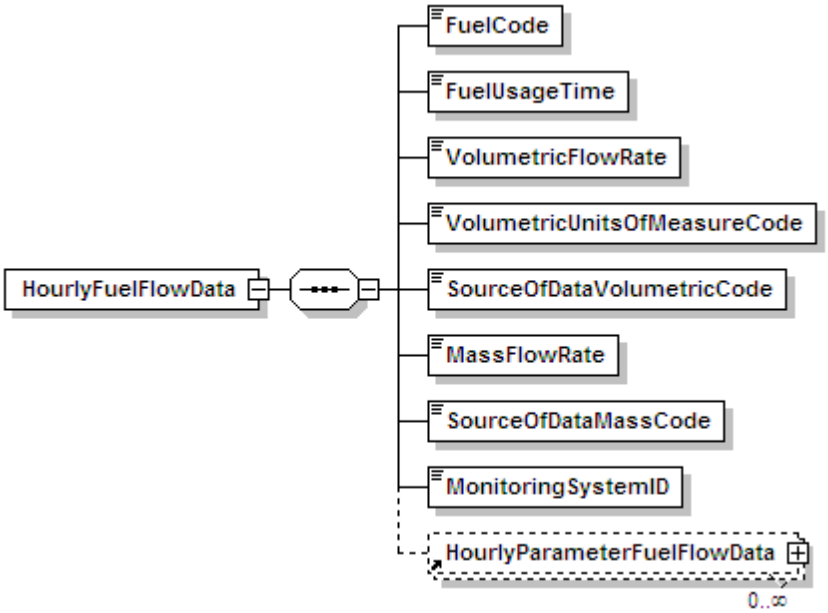

HOURLY FUEL FLOW DATA Overview

Description of Data

Whenever a flowmeter is used to determine heat input rate or SO_2 or CO_2 emissions in accordance with Appendix D, report an HOURLY FUEL FLOW DATA (HFF) record for each type of oil and/or gaseous fuel combusted during each operating hour using the Monitoring System ID associated with the appropriate flowmeter monitoring system. Do not report an HFF record for low mass emissions units (LME) that use a certified Appendix D fuel flowmeter for long term fuel flow purposes; use the LONG TERM FUEL FLOW (LTFF) record.

To report hourly SO_2 mass emission rate, CO_2 mass emission rate and/or Heat Input, you must also submit the appropriate HOURLY PARAMETER FUEL FLOW DATA records associated with each HFF record.

If you measure fuel flow at a common pipe location, report a HFF record using the Stack Pipe ID for each hour in which fuel is combusted by a unit served by the common pipe. Do not report HFF records for the individual units on an hourly basis. Apportion the heat input rate calculated at the common pipe location to each unit, using appropriate time-weighted apportionment formulas based on load (see Appendix F and the MONITOR FORMULA DATA instructions). Report the apportioned hourly heat input rate values in separate DERIVED HOURLY VALUE DATA (DHV)

records for the individual units. Use the hourly heat input rates and operating times from the DHV records to calculate the cumulative heat input values for each unit and report these values in unit-level SUMMARY VALUE DATA records. If you use uncertified fuel flowmeters at the unit and Equation F-21D to apportion the common pipe heat input to the individual units, report HFF only for the common pipe -- do not report any HFF records showing the fuel flow to the individual units.

For Oil Fuel Flow Records

Report an HFF for any hour in which oil is combusted as a startup fuel and fuel flow is estimated through tank measurements.

The oil flow rate is the net fuel flow rate to the unit(s). For example, it may represent the difference between the values measured for the main supply and re-circulating oil lines or it may represent the sum of oil flow for two fuel flowmeters measuring the same type of oil to the unit.

For oil fuel flow systems, if the fuel flow system measures mass flow rate of oil directly, leave blank the following data elements:

- Volumetric Flow Rate
- Volumetric Units of Measure Code
- Source of Data Volumetric Code

HOURLY FUEL FLOW DATA XML Elements

Fuel Code
Element Name: *FuelCode*

Report the type of oil or gaseous fuel combusted during the hour for the system. For oil fuels use the general fuel type codes provided in Table 32 below. For gaseous fuels, you may either report the type of fuel using the General Fuel Type codes (which are consistent with the codes used in the UNIT FUEL DATA record in the monitoring plan) or report more specific fuel codes for the type of gas combusted using one of the Specific Fuel Type codes. Both sets of fuel type codes are listed in Table 33 below. The Fuel Code should match the Fuel Code in the Monitor System record associated with the Monitoring System ID.

For Oil Fuel Flow Records

Table 32
Oil Fuel Flow Fuel Codes and Descriptions

Code	Description
DSL	Diesel Oil
OIL	Residual Oil
OOL	Other Oil

For Gas Fuel Flow Records

Table 33
Gas Fuel Flow Fuel Codes and Descriptions

Code	Description
General Fuel Type Codes	
LPG	Liquefied Petroleum Gas (if measured as a gas)
NNG	Natural Gas
OGS	Other Gas
PNG	Pipeline Natural Gas (as defined in §72.2)
PRG	Process Gas
Specific Fuel Type Codes	
BFG	Blast Furnace Gas
BUT	Butane (if measured as a gas)
CDG	Coal-Derived Gas
COG	Coke Oven Gas
DGG	Digester Gas
LFG	Landfill Gas
PDG	Producer Gas
PRP	Propane (if measured as a gas)
RFG	Refinery Gas
SRG	Unrefined Sour Gas

Fuel Usage Time
Element Name: *FuelUsageTime*

Report the fraction of the clock hour during which the unit combusted the specified fuel. You may use any equal increments from hundredths (0.01 hr) to quarters (0.25 hr) of an hour. Do not leave this field blank.

For common pipes, report the cumulative portion of the hour during which the specified fuel was combusted in any of the units served by the common pipe, not to exceed a fuel usage time of 1.00. For example, if a common pipe serves Units 1 and 2 and both units operate for the first 24 minutes (0.40 hr) of the hour and then are both shut down, the fuel usage time is 0.40. If Unit 1 operates only for the first 24 minutes of the hour and Unit 2 operates only for the last 24 minutes of the hour, the fuel usage time is 0.40 hr plus 0.40 hr, or 0.80. If Unit 1 operates for the first 40 minutes of the hour and Unit 2 operates for the last 40 minutes of the hour, report a fuel usage time of 1.00, since for all minutes in the hour, at least one of the units operated.

Volumetric Flow Rate
Element Name: *VolumetricFlowRate*

For Oil Fuel Flow Records

If the fuel flow system measures the volumetric flow rate of oil, report the net volumetric flow rate, as measured, rounded to one decimal place. This value represents an hourly rate for periods in which the fuel is combusted, not a total flow for the hour. If the hourly oil flow rate is so small that it results in a heat input rate of 0.0 mmBtu/hr (rounded to the nearest tenth) when Equation D-8 is used, you may report, as a default value, the minimum oil flow rate that will give a heat input rate greater than zero. This minimum oil flow rate must be defined in the MONITOR DEFAULT DATA record in the monitoring plan.

For units using Appendix D to account for SO_2 mass emissions you must report mass flow rate. If you use a volumetric flowmeter, report the volumetric flow rate in this field, the mass oil flow rate in the Mass Flow Rate field, and the density value used for the conversion in an HOURLY PARAMETER FUEL FLOW record. If the fuel flow system measures mass flow rate of oil directly, leave this field blank.

For Gas Fuel Flow Records

For Appendix D gas systems, the flow rate of gas is measured hourly by the fuel flowmeter system. The flow rate is the net fuel flow rate to the unit(s). For example, it may represent the sum of the gas flow rates for two fuel flowmeters measuring gas to the unit. All values must be reported in 100 standard cubic feet per hour (100 scfh) rounded to one decimal place. This value represents an hourly rate for periods in which the fuel is combusted, not a total flow for the hour. If the hourly gas flow rate is so small that it results in a heat input rate of 0.0 mmBtu/hr (rounded to the nearest tenth) when Equation D-6 is used, you may report, as a default value, the minimum gas flow rate that will give a heat input rate greater than zero. This minimum gas flow rate must be defined in the MONITOR DEFAULT DATA record in the monitoring plan.

Volumetric Units of Measure Code
Element Name: *VolumetricUnitsOfMeasureCode*

Report the units of measure used to report volumetric flow rate using the appropriate code from Table 34.

Table 34
Volumetric Units of Measure Codes and Descriptions

Fuel Type	Units of Measure Code	Description
Oil	BBLHR	Barrels/Hour
	GALHR	Gallons/Hour
	M3HR	Cubic Meters/Hour
	SCFH	Standard Cubic Feet/Hour
Gas	HSCF	100 Standard Cubic Feet/Hour

Leave this field blank only for Oil HFF records, where the fuel flow system measures mass flow rate of oil directly.

Source of Data Volumetric Code
Element Name: *SourceOfDataVolumetricCode*

Report the Source of Data Volumetric Code that indicates the type of value reported for gas flow or volumetric oil flow rate, as shown in Table 28.

Table 35
Source of Data Volumetric Codes and Descriptions

Code	Fuel Type	Description
0	Oil or Gas	Measured Data
1	Oil or Gas	Substitute Data Using Lookback Procedures
3	Oil or Gas	Maximum Potential Fuel Flow Rate (simplified missing data procedure for peaking units, only)
4	Oil or Gas	Emergency Fuel (maximum unit fuel flow rate)
5	Oil	Igniter Oil from Tank Measurements
6	Oil	Uncertified OFFM to Measure Igniter Oil
9	Oil or Gas	Default Minimum Fuel Flow Rate

Leave this field blank only for Oil HFF records, where the fuel flow system measures mass flow rate of oil directly.

Do not leave this field blank for gas fuel flow records.

Mass Flow Rate
Element Name: *MassFlowRate*

For Oil Fuel Flow Records

Report the Mass Flow Rate of oil either measured directly by a fuel flowmeter system or calculated from the volumetric flow rate measured by a fuel flowmeter system. All values must be reported in lb/hr, rounded to one decimal place. This value represents an hourly rate for the period in which fuel is combusted, not total flow for the hour.

For units using Appendix D to account for SO_2 mass emissions, you must report mass flow rate in order to calculate SO_2 mass emissions. Where the density of the oil is determined by the applicable ASTM procedures referenced in Part 75, use Equation D-3 to calculate the mass flow rate of oil (in lb/hr).

$$OIL_{rate} = V_{oil\text{-}rate} \; x \; D_{oil}$$

(Equation D-3)

Where:

OIL_{rate}	=	Mass rate of oil consumed per hr (lb/hr)
$V_{oil\text{-}rate}$	=	Volume rate of oil consumed per hr, measured in scfh, gal/hr, barrels/hr, or m^3/hr (rounded to one decimal place)
D_{oil}	=	Density of oil, measured in lb/scf, lb/gal, lb/barrel, or lb/m^3

However, for Subpart H units using Appendix D only for heat input determination, you may measure and report either mass flow rate or volumetric flow rate of oil. If you use volumetric flow rate and gross calorific value (GCV) to determine hourly heat input rate, leave this field blank.

For Gas Fuel Flow Records

Leave this field blank.

Source of Data Mass Code
Element Name: *SourceOfDataMassCode*

For Oil Fuel Flow Records

Report one of the following codes to indicate the type of value reported for mass oil flow rate. If the mass oil flow value was calculated from a volumetric oil flow value, report code 2, regardless of what Source of Data code was reported for the volumetric oil flow. For emergency fuels where certified fuel flowmeters are used instead of the maximum unit fuel flow rate for heat input, use either code 0, 1, 2, or 3 as appropriate. Do not use code 4 unless the maximum unit fuel flow rate option is used for reporting heat input for the emergency fuel.

Table 36
Source of Data Mass Codes and Descriptions

Code	Description
0	*Measured Data (using a mass flowmeter)
1	Substitute Data Using Lookback Procedures
2	*Mass Flowrate Derived From Volumetric Value.
3	Maximum Potential Fuel Flow Rate (simplified missing data procedure for peaking units, only)
4	Emergency Fuel (maximum unit fuel flow rate)
5	Igniter Oil From Tank Measurements
6	Uncertified OFFM to Measure Igniter Oil
9	Default Minimum Fuel Flow Rate

* Including measured or derived mass data, for an emergency fuel where a certified mass or volumetric oil flowmeter is used.

Do not leave this field blank if fuel flow is reported in the Mass Flow Rate element.

Monitoring System ID
Element Name: *MonitoringSystemID*

Report the three character Monitoring System ID for the gas or oil fuel flowmeter system.

For hours in which you report the source of the fuel flow rate data (Source of Data Volumetric Code or Source of Data Mass Code element) as codes 4, 5, or 6 for "Emergency Fuels," where the maximum unit fuel flow rate is used, or as "Igniter Oil from Tank Measurements," or "Uncertified OFFM to Measure Igniter Oil," leave the Monitoring System ID blank.

2.5.3.1 HOURLY PARAMETER FUEL FLOW DATA

HOURLY PARAMETER FUEL FLOW DATA XML Model

Figure 16
Hourly Parameter Fuel Flow Data XML Elements

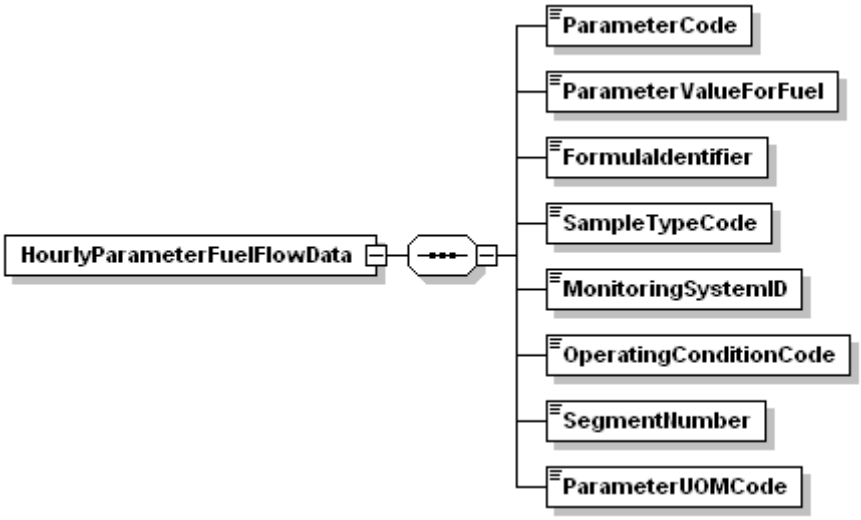

HOURLY PARAMETER FUEL FLOW DATA Overview

Description of Data

For each HOURLY FUEL FLOW DATA (HFF) record, submit HOURLY PARAMETER FUEL FLOW DATA records to provide the following information, as applicable:

- Gross calorific value (GCV) of the fuel;
- Density of the oil, if oil is measured on a volumetric basis and is required to be converted to a mass basis (for locations that report SO_2);
- Sulfur content or default SO_2 emission rate for the fuel, for locations that report SO_2;
- Hourly heat input rate and/or SO_2, and CO_2 mass emission rate values, as calculated from the hourly fuel flow; and
- NO_x emission rate determined using an Appendix E correlation curve for the single fuel.

Submit an HOURLY PARAMETER FUEL FLOW DATA record separately for each parameter as applicable. For units using Appendix D to account for heat input rate and SO_2 and CO_2 emissions, for each hour in which any type of oil or gas is burned, report an HOURLY PARAMETER FUEL FLOW DATA record and the corresponding HFF record(s) for each fuel combusted during the hour.

HOURLY PARAMETER FUEL FLOW DATA XML Elements

Parameter Code
Element Name: *ParameterCode*

Report the parameter for the HOURLY PARAMETER FUEL FLOW DATA record using one of the codes in Table 37:

Table 37
Parameter Codes and Descriptions for Hourly Parameter Fuel Flow

Code	Description
CO2	CO_2 Mass Emission Rate (tons/hr)
DENSOIL	Density of Oil
FC	Carbon-Based F-Factor (for CO_2 calculation)
GCV	Gross Calorific Value for Oil or Gas
HI	Heat Input Rate (mmBtu/hr)
NOXR	NO_x Emission Rate (lb/mmBtu) (Appendix E)
SO2	SO_2 Hourly Mass Rate (lb/hr)
SO2R	Default SO_2 Emission Rate (lb/mmBtu)
SULFUR	Sulfur Content (percent by weight)

Parameter Value for Fuel
Element Name: *ParameterValueForFuel*

If the Parameter Code is "SO2," report the SO_2 mass emission rate for the fuel in lb/hr calculated using Equation D-2, D-4, or D-5 from Appendix D to Part 75.

If the Parameter Code is "CO2," report the CO_2 mass emission rate for the fuel in tons/hr calculated using Equation G-4 from Appendix G to Part 75.

If the Parameter Code is "HI," report the Heat Input rate for the fuel calculated by multiplying the heat content (GCV) of the fuel by the hourly fuel flow rate. Report this value in units of mmBtu/hr.

If the Parameter Code is "NOXR," report the NO_x emission rate for the fuel in lb/mmBtu determined using an Appendix E correlation curve.

If the Parameter Code is "GCV," report the gross calorific value used to calculate heat input. Be sure to use the units of measure that correspond to the units used to report the fuel flow.

If the Parameter Code is "DENSOIL," report the density of oil used to calculate mass oil flow rate from volumetric oil flow rate Be sure to use the units of measure that correspond to the units used to report the fuel flow.

If the Parameter Code is "FC" report the carbon based F-factor for this fuel, as used to calculate CO_2 using equation G-4.

If the Parameter Code is "SULFUR," for oil fuel flow records, if percent sulfur is measured, the actual value may be reported to the appropriate number of decimal places in Table 30. Use Table D-4 in Appendix D to Part 75 to determine what value you should report in this field. For gas fuel flow records report the sulfur content of the gaseous sample in grains/100 scf. Use Table D-5 in Appendix D to Part 75 to determine the correct value. If the sulfur content for any sample(s) is 0.04 grains/100 scf or less, report 0.1 grains/100 scf.

If the Parameter Code is "SO2R," report the default SO_2 emission rate for natural gas of 0.0006 lb/mmBtu for pipeline natural gas if pipeline natural gas is combusted. If calculating a default emission rate using Equation D-1H, report the default rate in this field**.**

For all parameter codes, report the value to the appropriate number of decimal places in Table 38.

Table 38
Precision of Reported Values for Parameter Value for Fuel

Parameter Codes		Number of Decimal Places
CO2, FC, GCV, HI		One
DENSOIL		Five
NOXR		Three
SO2	Oil	One
SO2	Gas	Five
SO2R		Five
SULFUR	Oil	Four
SULFUR	Gas	One

Formula Identifier
Element Name: *FormulaIdentifier*

Report the code corresponding to the formula listed in the monitoring plan used to calculate the parameter for the HOURLY PARAMETER FUEL FLOW DATA record. For parameters GCV, FC, DENSOIL, and SULFUR, leave this field blank. For parameter SO2R, report this field if using a D-1H formula, otherwise leave it blank.

Sample Type Code
Element Name: *SampleTypeCode*

Report the type of sample used to determine the GCV, density, or sulfur content using one of the codes in Table 39.

Table 39
Sample Type Codes and Descriptions

Code	Fuel	Parameters	Description
0	Gas	GCV, SULFUR	Actual Measured Hourly Average Sample from GCH
1	Oil	GCV, DENSOIL, SULFUR	Actual Measured Value from Oil Composite or Tank Sample
2	Gas	GCV, SULFUR	Actual Measured Value from a Daily Sample
	Oil	GCV, DENSOIL, SULFUR	
3	Gas	GCV	Actual Measured GCV from Most Recent Monthly Sampling
4	Gas	GCV, SULFUR	Actual Measured Value from Most Recent Shipment or Lot
5	Gas	SULFUR	Highest Daily Sample in 30 Daily Samples
	Oil	GCV, DENSOIL, SULFUR	
6	Gas	GCV, SULFUR	Highest Sampled Value in Previous Calendar Year (or a higher sampled value, superseding the assumed value)
	Oil	GCV, DENSOIL, SULFUR	
7	Gas	GCV, SULFUR	Maximum Value Allowed by Contract (or a higher sampled value, superseding the assumed value)
	Oil	GCV, DENSOIL, SULFUR	
8	Gas	GCV, SULFUR	Missing Data (Maximum Potential Value for missing data or emergency fuel from Table D-6 Appendix D section 2.4.1)
	Oil	GCV, DENSOIL, SULFUR	

Monitoring System ID
Element Name: *MonitoringSystemID*

For Appendix E NO_x rate records (Parameter NOXR), report the three-character Monitoring System ID for the applicable NOXE system. If there is no applicable NOXE system (e.g., for emergency fuel records) leave this field blank. Also leave this field blank for other parameters.

Operating Condition Code
Element Name: *OperatingConditionCode*

For Appendix E NO_x rate records (Parameter NOXR), report the appropriate code from Table 40 that indicates the condition that was used to determine the NO_x emission rate for the hour.

Table 40
Operating Condition Codes and Descriptions for HOURLY PARAMETER FUEL FLOW

Code	Description
E	Emergency Fuel or Ignition Fuel
M	Correlation Curve for the Fuel Mixture Has Expired
N	Operating Parameter Is Outside of Normal Limits
U	Uncontrolled Hour
W	Operation Above Highest Tested Heat Input Rate Point on the Curve
X	Operating Parameter Data Missing or Invalid
Y	Designated Operational and Control Equipment Parameters within Normal Limits
Z	Operation Below Lowest Tested Heat Input Rate Point on the Curve

When to Report "E"

Report "E" if the unit burned an emergency or ignition fuel during the hour and you do not have a separate correlation curve for the emergency fuel. For these hours, report the fuel-specific maximum potential NO_x emission rate (MER) in the *ParameterValueForFuel* field.

When to Report "M"

When 20 calendar quarters have elapsed since the quarter of the last Appendix E test for a particular type of fuel, without a subsequent re-test being done, the correlation curve for that fuel type has expired. From that point on (i.e., starting with the first hour after the end of the 20th quarter), the previous correlation curve is considered invalid, and you must report the fuel-specific MER for every hour in which the fuel is combusted, until a successful re-test has been completed. Report "M" for each such hour.

When to Report "N"

Report "N" if a unit operating parameter is outside of normal limits. For example, report "N" when excess O_2 exceeds by more than 2.0 percent the excess O_2 value recorded at the same operating heat input rate during the last NO_x emission rate test.

Also, if one or more parameters are outside the normal limits for > 16 consecutive operating hours, a re-test is required within 30 unit operating days or 180 calendar days (whichever occurs first -- see Appendix E, Section 2.3). Beginning with the 17th consecutive "out-of-spec" operating hour and continuing until the re-test is completed, continue to report "N" for each hour of combustion of the fuel(s) that triggered the need for the re-test.

Use missing data procedures from Appendix E for any hour in which "N" is indicated. These procedures require you to substitute the highest tested NO_x emission rate on the curve for the fuel.

Note: If fuel flow rate and gross calorific value data are missing, use the missing data procedures in Appendix D, not Appendix E.

When to Report "U"

For units with add-on NO_x controls only. Report "U" if any parameter used to verify proper operation of the emission controls is outside of normal limits (or the control equipment is not functioning). For these hours, report the fuel-specific NO_x MER in the Parameter Value for Fuel field.

When to Report "W"

Report "W" if the hourly heat input rate is higher than the maximum heat input rate correlated on the curve. Use the missing data procedures in section 2.5.2.1 of Appendix E when this occurs. During your next periodic or quality assurance/quality control related testing, test under conditions more representative of your maximum potential heat rate. If possible, use the new maximum heat input rate as the highest heat input point during the next test.

When to Report "X"

For missing or invalid excess O_2 or other operating parameter data, report "X" and report the highest NO_x emission rate on the curve for the fuel. This indicates that the hour is not demonstrated to be within the specified limits in Section 2.3 of Appendix E, but it also is not demonstrated to be outside the specified limits. (Note that the use of the "X" value is optional, you may choose instead to treat these hours as out-of-spec.) Hours marked with "N" count towards the 16 consecutive unit operating hours before retesting is required, while hours marked with "X" do not count for this purpose. In either case, the data count against the availability of data where the unit operates within the parameters. If the data availability falls below 90.0 percent, the Agency may require retesting.

When to Report "Z"

Report "Z" if the hourly heat input rate is below the lowest heat input rate. In this case it is not necessary to verify that the operational parameters are within any specified limits. Report the same NO_x emission rate recorded during testing at the lowest heat input rate.

Segment Number
Element Name: *SegmentNumber*

For an Appendix E NO_x Emission Rate record (for a unit using one correlation curve for a consistent fuel mixture), report the Segment Number (1 – 4) indicating which portion of the correlation curve was used to determine the value for the hour. For operating condition codes N or X, report the segment number that contains the highest NO_x emission rate on the curve for the fuel. Leave this field blank if the correlation curve was not used for the hour (i.e., the Operating Condition Code is E, M, U, or W).

Parameter UOM Code
Element Name: *ParameterUOMCode*

Report the code from Table 41 that identifies the unit of measure in which the Parameter Value for Fuel is reported. Be sure it corresponds properly to the units of measure in which the Hourly Fuel Flow rate was reported.

Table 41
Units of Measure Codes and Descriptions for HOURLY PARAMETER FUEL FLOW

Parameter	Code	Description
CO2	TNHR	Tons per Hour
DENSOIL	LBBBL	Pounds per Barrel
	LBGAL	Pounds per Gallon
	LBM3	Pounds per Cubic Meter
	LBSCF	Pounds per Standard Cubic Foot
FC	SCFCBTU	CO_2 Standard Cubic Feet/mmBtu
GCV	BTUBBL	BTU per Barrel
	BTUGAL	BTU per Gallon
	BTULB	BTU per Pound
	BTUM3	BTU per Cubic Meter
	BTUSCF	BTU per Standard Cubic Foot
	BTUHSCF	BTU per 100 Standard Cubic Feet
HI	MMBTUHR	Million BTU per Hour
SO2	LBHR	Pounds per Hour
SO2R, NOXR	LBMMBTU	Pounds per Million BTU
SULFUR	PCT	Percent by Weight
	GRHSCF	Grains per 100 Standard Cubic Feet

2.5.4 HOURLY GFM DATA

Figure 17
Hourly GFM Data XML Elements

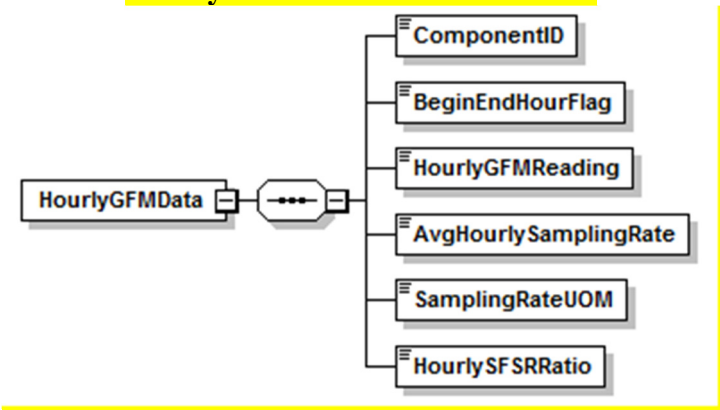

Description of Data

For each operating hour of a data collection period in which a sorbent trap monitoring system is used to determine Hg concentration, report HOURLY GFM DATA records as follows:

Generally, two HOURLY GFM DATA records will be reported for each hour, i.e., one for each sampling train ("STRAIN") component of the monitoring system. However, note the following exceptions:

- For hours in which the unit or stack does not operate, do not report any HOURLY GFM DATA records.
- Also, do not report these records for hours outside the current calendar quarter, even though a sample collection period may extend into the next quarter.
- If valid GFM data (sample flow meter volume reading) ~~is~~are not recorded with a particular STRAIN component for the beginning or ending hour of the data collection period, do not report HOURLY GFM DATA records for that component and report a "QA Status Code" of "INC" in the applicable SAMPLING TRAIN DATA record (see section 2.7.1).
- If the trap from one sampling train is accidentally broken, lost, or invalidated, do not report HOURLY GFM DATA records for the STRAIN component associated with that trap, and report a "QA Status Code" of "LOST" in the applicable SAMPLING TRAIN DATA record (see section 2.7.1).
- If the sample gas flow meter was "out-of-control" during the sample collection period, do not report HOURLY GFM DATA records for the STRAIN component associated with that

flow meter, and report a "QA Status Code" of "EXPIRED" in the applicable SAMPLING TRAIN DATA record (see section 2.7.1).

HOURLY GFM DATA Elements

Component ID
Element Name: *ComponentID*

Report the ID number of the STRAIN component used during the hour.

Begin End Hour Flag
Element Name: *BeginEndHourFlag*

Report an "I" flag for the HOURLY GFM DATA record that marks the beginning of the sample collection period. Report an "F" flag to indicate the HOURLY GFM DATA record that marks the end of the sample collection period. For all other hours during a sample collection period, leave this field blank.

Hourly GFM Reading
Element Name: *HourlyGFMReading*

At the beginning and end of the sample collection period, and once in every intermediate hour of the sample collection period, record and report the hourly sample flow meter volume reading, in units of in dry standard cubic meters (dscm). Round off the reading to two decimal places.

Avg Hourly Sampling Rate
Element Name: *AvgHourlySamplingRate*

Report the average sample flow rate for the hour, rounded to two decimal places. Be sure to express the value in the same units of measure for each hour. For instructions on how to report the sample flow rate in a "transition hour", see "Special Considerations", below,)

Sampling Rate UOM
Element Name: *SamplingRateUOM*

Indicate the units of measure for the Avg Hourly Sampling Rate by reporting the appropriate code from Table 42.

Table 42
Sampling Rate Units of Measure
Codes and Descriptions

Code	Description
CCMIN	Cubic Centimeters per Minute
DSCMMIN	Dry Standard Cubic Meters per Minute
LMIN	Liters per Minute
CCHR	Cubic Centimeters per Hour
DSCMHR	Dry Standard Cubic Meters per Hour
LHR	Liters per Hour

Hourly SFSR Ratio
Element Name: *HourlySFSRRatio*

Report the ratio of the unadjusted hourly average ~~unadjusted~~ stack gas flow rate to the average hourly sample flow rate, calculated according to Equation 12B-3 of Performance Specification 12B in 40 CFR Part 60, Appendix B. The ratio must be a number between 1 and 10, rounded off to one decimal place.
~~Do not calculate the ratio for hours in which the stack gas flow rate is a substitute data value.~~

Use data from the first hour of the sample collection period to calculate the "reference SFSR ratio". However, if the stack gas flow rate in the first hour of the sample collection period is a substitute data value, defer calculation of the reference ratio until a quality-assured stack gas flow rate is obtained. Also defer calculation of the reference ratio if the first hour of the sample collection period is a "transition hour" (see "Special Considerations", below).

In each subsequent hour of the sample collection period, the ratio must be maintained within ± 25% of the reference ratio. Do not calculate the ratio for hours in which the stack gas flow rate is a substitute data value, or if the average sample flow rate is missing or invalid.

~~(Note: If the stack gas flow rate in the first hour of the sample collection period is a substitute data value, defer calculation of the reference ratio until a quality-assured stack gas flow rate is obtained).~~

Special Considerations

For a "transition hour", when one pair of sorbent traps is removed from service and a new pair of traps is placed in service, note the following special reporting instructions:

- Calculate the hourly SFSR ratio for the "old" pair of traps that is removed from service, as follows. Take the ratio of the hourly average stack gas flow rate (even though the pair

of traps was used for only part of the hour) to the average sample flow rate for the part of the hour in which the old pair of traps was in operation.

- For the "new" pair of traps that is placed into service, do not use data recorded during the transition hour to calculate the SFSR reference ratio, even though the transition hour is the first hour in the sample collection period. Rather, calculate the SFSR reference ratio for the new pair of traps in the next hour in the sample collection period.

2.6 LONG TERM FUEL FLOW DATA

LONG TERM FUEL FLOW DATA XML Model

Figure 18
Long Term Fuel Flow Data XML Elements

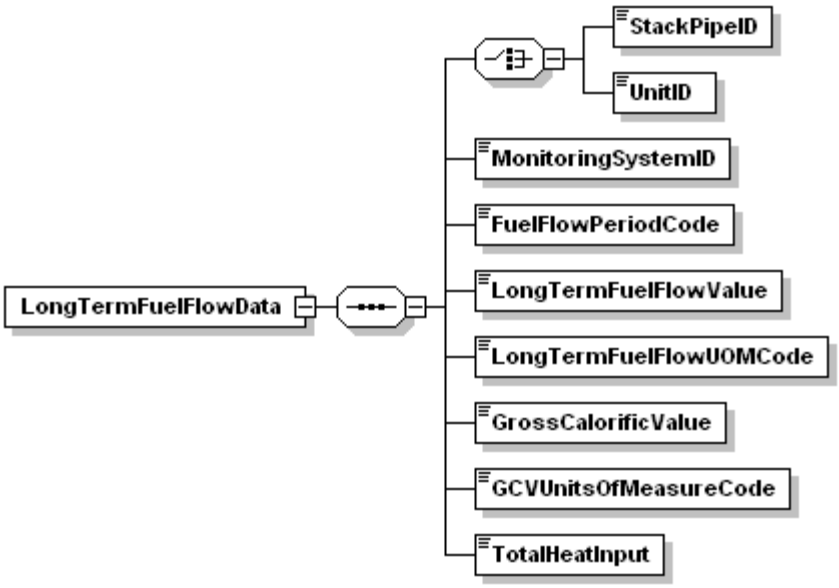

LONG TERM FUEL FLOW DATA Overview

Description of Data

If you have a qualifying low mass emissions (LME) unit or group of units and use a long term fuel flow system to measure oil or gas to calculate heat input, report a LONG TERM FUEL FLOW DATA record for each long term oil (LTOL) monitoring system and each long term gas (LTGS) monitoring system used during the quarter or reporting period.

For a group of LME units served by a common pipe (or supply tank), you must define a LTOL or LTGS monitoring system in the monitoring plan for the pipe or tank. In both cases (i.e., for common pipe or tank), the pipe or tank ID number must begin with a "CP" prefix (e.g., CP001). If two or more common pipes or tanks of *different* fuel types supply the same group of LME units, you must define a separate LTOL or LTGS system for each pipe or tank. If two or more pipes or tanks supply the same type of fuel to a group of LME units, you may represent it as a single LTOL or LTGS system.

LONG TERM FUEL FLOW DATA XML Elements

Unit ID or Stack Pipe ID
Element Name: *UnitID* or *StackPipeID*

Report either the Unit ID or Stack Pipe ID for the long term fuel flow location. This is the alphanumeric code assigned by a source to identify a unit, stack, or pipe.

Monitoring System ID
Element Name: *Monitoring System ID*

Report the monitoring system ID, either LTOL or LTGS, for the long term fuel flow (LTFF) system.

Fuel Flow Period Code
Element Name: *FuelFlowPeriodCode*

If this location is subject to an ozone season program and this is a second quarter emissions file, report either "A" to indicate that this record contains long term fuel flow for the month of April, or "MJ" to indicate that this record contains long term fuel flow for May and June. Otherwise, leave this field blank.

LTFF Value
Element Name: *LongTermFuelFlowValue*

Report the total fuel flow recorded for the quarter, reporting period, or fuel flow period to zero decimal places. If you measure in units other than gallons, pounds or standard cubic feet, convert the reading to allowable units by using conversion equations.

Instructions for Using Billing Records

- If you have daily billing records, then use the daily fuel usage to apportion the fuel flow on a daily basis to hours within the ozone season or quarter beginning on the first operating day of the ozone season or quarter and ending on the last operating day of the ozone season or quarter.

  Example 1. If a billing period starts on June 15 and ends on July 16 and the bill includes daily usage, use the daily quantities to determine which fuel was combusted during June (attributed to the second quarter) and which fuel was combusted during July (attributed to the third quarter).

- If the bill does not specify daily fuel usage, apportion fuel based on unit output, as reported in the OPERATING HOUR DATA record.

  Example 2. If the billing period starts on June 15 and ends on July 16, and the bill only has total fuel combusted during the period, apportion the fuel into June and July based on the unit output for the billing period. Thus, if 75 percent of the unit output between June

15 and July 16 occurred during June, then apportion 75 percent of the total fuel into June and 25 percent into July.

- It is the responsibility of the owner/operator to obtain all necessary billing records in time to ensure timely quarterly report submissions.

Instructions for Using Tank Drop Measurements

- For year-round reporting, measure the tank volume (the beginning and ending LTFF measurement) within no more than 48 hours of the beginning or end of a quarter.

  Example 3. If you measure the level of oil in a tank on December 30 or 31 or on January 1 or 2, use this measurement (compared to the baseline value at the beginning of the quarter) to calculate the amount of fuel combusted during the quarter (even if the measurement was taken in January). Use this measurement as the baseline for determining the amount of fuel combusted during the next quarter. When apportioning heat input based on unit output only, use output from the beginning and end of the quarter, not the output corresponding to the beginning and end of the actual measurement period.

- Perform as many measurements as necessary to accurately determine fuel usage during the measurement period. The Agency recommends performing measurements before and after fuel is added to a tank unless you know the exact volume of fuel added to the tank.

- If a unit operated for only a very short period or used only a very limited amount of fuel during a quarter or reporting period so that a tank drop measurement will not yield an accurate estimate of the fuel combusted during the quarter, use the unit's maximum rated heat input for each hour of operation during that quarter. Report a method of determination code (MODC) of "45" in the DERIVED HOURLY VALUE DATA (DHV) record for Total Heat Input (HIT) for each hour.

Instructions for Using Certified Fuel Flowmeters

- When a certified Appendix D fuel flowmeter is used for long term fuel flow purposes, you are required to record hourly fuel flow rates. You must also submit MONITORING SYSTEM FUEL FLOW DATA in the monitoring plan and must submit the results of all periodic fuel flowmeter quality assurance tests. However, reporting of hourly fuel flow rate information is not required. Therefore, do not report HOURLY FUEL FLOW DATA (HFF) records for LME units.

- Use the recorded hourly fuel flow rates, fuel usage times (if available), and the density of the fuel (if needed) to determine the total mass or volume (as applicable) of each type of fuel combusted during the reporting period. Then, use Equation LM-2 or LM-3 in §75.19, as appropriate, to calculate the heat input from each type of fuel combusted during the reporting period. Add together all of the reporting period heat input values for all fuels, according to Equation LM-4. Then, apportion the total heat input for the reporting period to each operating hour in the period, using Equations LM-5 through LM-8A (as applicable) replacing the term "quarter" with the term "reporting period."

- When calculating the total mass or volume of fuel combusted, if hourly fuel usage times are not available, use a value of 1.00 for each operating hour in the reporting period.

- If any fuel flowmeter data are missing for any hour(s) in the reporting period, you must provide substitute data for those hours, using either: (1) the load-based missing data procedures in Appendix D (if these procedures are programmed in the Data Acquisition and Handling System (DAHS)); or (2) the maximum system fuel flow rate in MONITORING SYSTEM FUEL FLOW DATA record).

Long Term Fuel Flow UOM Code
Element Name: *LongTermFuelFlowUOMCode*

Report the units of measure in which you are reporting fuel flow using one of the following uppercase codes in Table 43.

Table 43
Long Term Fuel Flow UOM Code

Code	Description
GAL	Gallons (oil)
LB	Pounds (oil)
SCF	Standard Cubic Feet (gas)

Gross Calorific Value
Element Name: *GrossCalorificValue*

Report the heat content or gross calorific value (GCV) of the fuel from Table LM-5 of §75.19 or the highest GCV recorded in the previous calendar year from fuel sampling and analysis according to the procedures of Appendix D to Part 75. If you measure in units other than those listed below, convert to an allowable unit by using appropriate conversion equations. Report the value to one decimal place.

GCV Units of Measure Code
Element Name: *GCVUnitsofMeasureCode*

Report the units of measure for GCV using one of the uppercase codes in Table 44.

Table 44
GCV Units of Measure Code

Code	Description
BTUGAL	Btu per Gallon
BTULB	Btu per Pound
BTUSCF	Btu per Standard Cubic Feet

Total Heat Input
Element Name: *TotalHeatInput*

Calculate and report the total heat input (mmBtu) measured by the LTFF system for the quarter or reporting period using the appropriate heat input formula from §75.19 (e.g., LM-2, LM-3). Report the value to zero decimal places.

Specific Considerations

- If this system is the only LTFF system used for the unit or group of units, apportion this heat input to the unit operating hours in the quarter (or reporting period) using the appropriate equation in §75.19. If two or more LTFF systems are used during the quarter or reporting period, sum the total heat input values from all systems before apportioning heat input to the unit operating hours.

- For a single LME unit which is not part of a group of LME units, the total heat input values for all LTFF systems used during the quarter must equal the quarterly unit heat input value reported in the SUMMARY VALUE DATA record.

- For a group of LME units served by one or more common pipes or tanks, you must report both LTFF and SUMMARY VALUE DATA records under each common pipe (or tank) ID number. For each common pipe or tank ID, the total heat input reported in the LTFF record(s) must equal the quarterly heat input reported in the SUMMARY VALUE DATA record.

- For any hour during which the unit is burning a secondary fuel that is not measured by a long term fuel flow system, you must calculate the total heat input for the hour using the maximum rated hourly heat input rate for the unit. Report an MODC of "45" in the DHV record for (HIT) for the hour.

- If a unit (or group of units linked to a common pipe) using LTFF to determine heat input burns fuel, but does not generate any load during the reporting period, apportion the total heat input based on operating time instead of load using the appropriate equation in §75.19.

2.7 SORBENT TRAP DATA

Figure 19
Sorbent Trap Data XML Elements

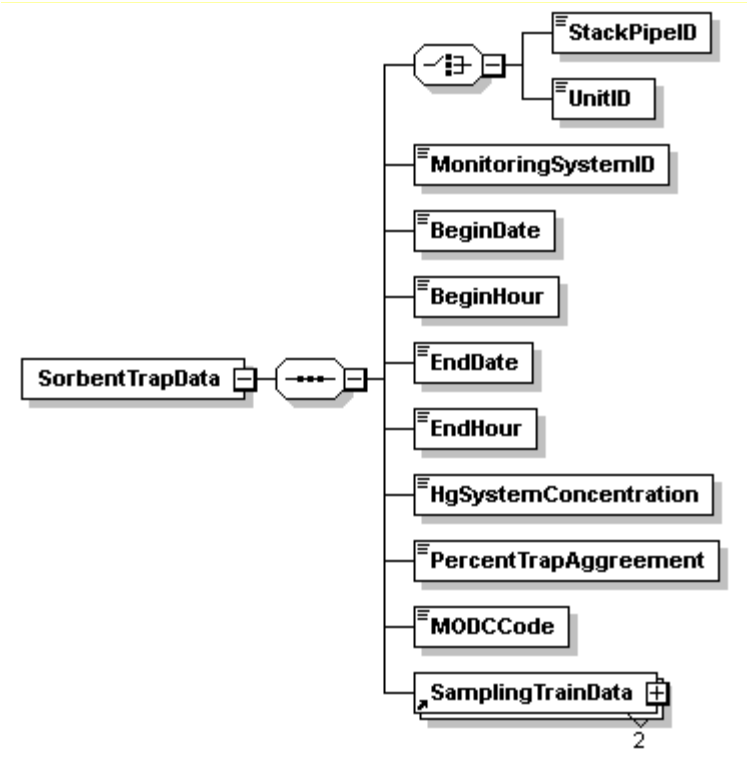

Description of Data

Report a SORBENT TRAP DATA record for each sorbent trap sampling period that begins inside the current calendar quarter.

To the extent practicable, time the sample collection periods so that they do not cross quarter boundaries. However, if a sample collection period does extend into the next quarter:

- Be sure to end it early enough to obtain and process the results before the deadline for submitting the emissions report for the current quarter; and
- Include it in the emissions report for the current quarter, even though its end date is in the next quarter.

Report all relevant hourly MHV and MMHV records for each sample collection period (i.e., records of Hg concentration and all auxiliary parameters needed to convert Hg concentration to the units of the applicable emission standard).

SORBENT TRAP DATA Elements

Unit ID or Stack Pipe ID
Element Name: *UnitID* or *StackPipeID*

Report either the Unit ID or Stack Pipe ID ~~for the long-term fuel flow~~ (i.e., the monitoring location). This is the alphanumeric code assigned by a source to identify a unit, stack, or pipe.

Monitoring System ID
Element Name: *MonitoringSystemID*

Report the monitoring system ID for the sorbent trap monitoring system represented by this record.

Begin Date
Element Name: *BeginDate*

Report the date that the sample collection period began.

Begin Hour
Element Name: *BeginHour*

Report the hour that the sample collection period began.

End Date
Element Name: *EndDate*

Report the date that the sample collection period ended. This date could be in the next calendar quarter.

End Hour
Element Name: *EndHour*

Report the last hour of the sample collection period.

HgSystemConcentration
Element Name: *HgSystemConcentration*

Determine the quality-assured, unadjusted Hg concentration for the monitoring system (µg/scm), as follows:

If the QA Status Code (from section 2.7.1) is "PASSED" for both sampling train ("STRAIN") components of the system and the relative deviation (RD) criterion is also met, then average the measured Hg concentrations from the two components arithmetically and report the result, rounded to three significant figures.

If the QA Status Code is "PASSED" for one of the STRAIN components and "FAILED" for the other, multiply the Hg concentration obtained with the passing component by 1.111 and report the result, rounded to three significant figures.

If the QA Status Code for both trains is "UNCERTAIN" (indicating that all QA/QC criteria were met for both STRAIN components, but the relative deviation (RD) criterion was not met), you may either invalidate the data or report the higher of the two measured Hg concentrations, rounded to three significant figures.

Report the Hg System Concentration in a MMHV record, for each hour of the sample collection period (see "Special Considerations" in section 2.5.1.1). Report each concentration value to three significant figures, using scientific notation, keeping only one digit to the left of the decimal point, with no spaces between the characters. For example, if the Hg concentration is 0.159 µg/scm, report 1.59-E-1.

Leave this field blank if a quality-assured Hg concentration for the sample collection period is not available. The Hg concentration is considered to be unavailable if:

- The QA Status Code is "LOST", "EXPIRED" or "INC" for either or both STRAIN components;
- The QA Status Code is "FAILED" for both STRAIN components;
- The QA Status Ceode for both STRAIN components is "UNCERTAIN" and you elect to invalidate the data; or
- If the flue gases are routed through an unmonitored bypass stack and the Hg concentration is not measured.

Percent Trap Agreement
Element Name: *PercentTrapAgreement*

Report the relative deviation (RD) between Traps "a" and "b", rounded to one decimal place. Calculate the RD using Equation 12B-7 in Performance Specification 12B.

Leave this field blank if:

- The QA Status Code is "LOST", "EXPIRED" or "INC" for either or both STRAIN components;
- The QA Status Code is "FAILED" for both trains; or
- If the flue gases are routed through an unmonitored bypass stack and the Hg concentration is not measured.

MODC Code
Element Name: *MODCCode*

Report the method of determination code (MODC) from Table 45 for the hourly Hg concentration.

The QA Status Codes from section 2.7.1 are used to determine the appropriate MODC, as follows:

Report a MODC of "01" (or "02" for a backup monitoring system) if the QA Status Code for both STRAIN components is "PASSED". Report this same MODC in a MMHV record for each hour of the sample collection period (see section 2.5.1.1).

Report a MODC of "32" if the QA Status Code is "PASSED" for one of the STRAIN components and "FAILED" for the other. Report this same MODC in a MMHV record for each hour of the sample collection period.

Report a MODC of "33" if the QA Status Code for both STRAIN components is "UNCERTAIN" and you elect to report the higher of the two Hg concentrations. Report this same MODC in a MMHV record for each hour of the sample collection period.

Report a MODC of "34" if:

- The QA Status Code is "LOST", "EXPIRED" or "INC" for either or both STRAIN components;
- The QA Status Code is "FAILED" for both STRAIN components; or
- The QA Status code for both STRAIN components is "UNCERTAIN" and you elect to invalidate the data;

When MODC "34" is reported in this field, also report MODC "34" in a MMHV record for each hour of the sample collection period and report MODC "38" in a MDHV record for each hour of the sample collection period (see section 2.5.2.1).

Report MODC "35" in this field if the flue gases are routed through an unmonitored bypass stack and the Hg concentration is not measured. Report this same MODC in a MMHV record and report MODC "38" in a MDHV record, for each hour of the sample collection period (see section 2.5.2.1).

Table 45
MODC Codes for Sorbent Trap Data

Code	Description
01	Primary Monitoring System (and Primary Bypass (PB))
02	Redundant Backup or Regular Non-Redundant Backup Monitoring System
32	Hourly Hg concentration determined from analysis of a single sorbent trap multiplied by a factor of 1.111
33	Hourly Hg concentration determined from the sorbent trap with the higher Hg concentration (relative deviation criterion for the paired traps is not met)
34	Hourly Hg concentration ~~unavailable due to a problem with the monitoring system~~is missing or invalid
35	Hourly Hg concentration not ~~measured or~~ monitored (flue gases routed through an unmonitored bypass stack)

2.7.1 SAMPLING TRAIN DATA

Figure 20
Sampling Train Data XML Elements

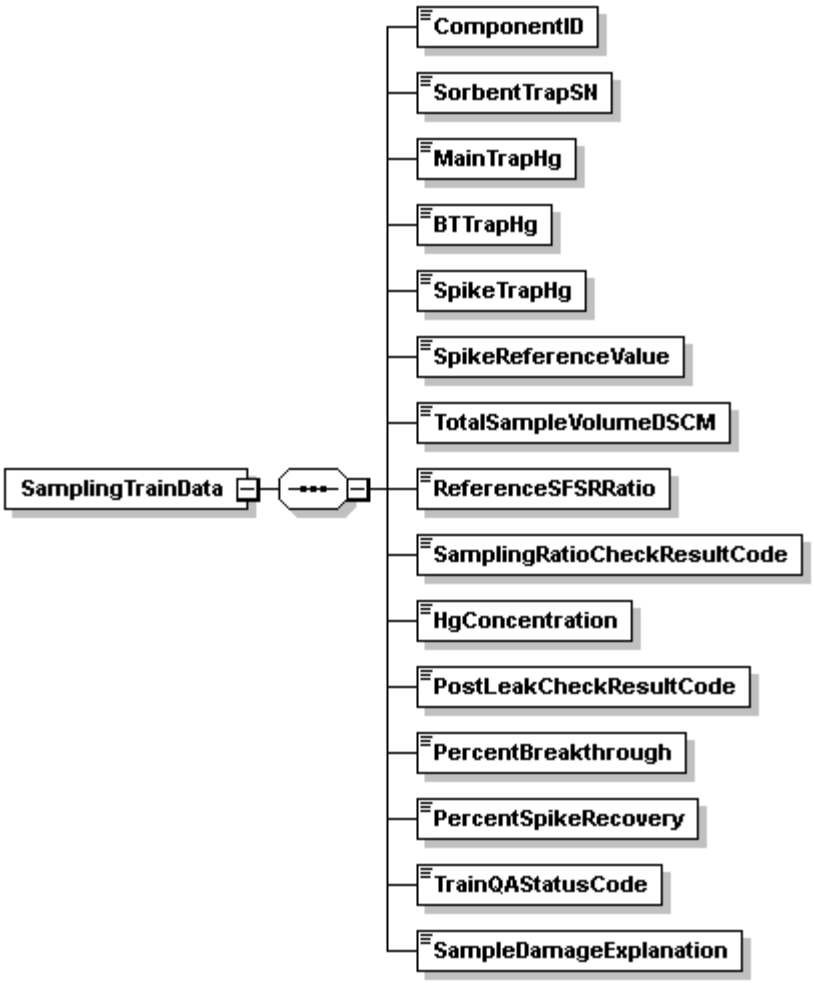

Description of Data

For each SORBENT TRAP DATA record, submit two SAMPLING TRAIN DATA records, i.e., one for each sampling train ("STRAIN") component of the sorbent trap monitoring system.

SAMPLING TRAIN DATA Elements

For each SAMPLING TRAIN DATA record, report the following data elements:

Component ID
Element Name: *ComponentID*

Report the STRAIN component ID.

Sorbent Trap SN
Element Name: *SorbentTrapSN*

Report the serial (ID) number of sorbent trap associated with the STRAIN component.

Main Trap Hg
Element Name: *MainTrapHg*

Report the mass of Hg recovered from the main collection section (Section 1) of the sorbent trap, in micrograms (µg), rounded to two decimal places.

Leave this field blank if the sample was accidentally lost, damaged, or broken and could not be analyzed, if the sample gas flow meter was "out-of-control", or if the sample gas volume reading for the initial or final hour of the sample collection period was missing or invalid.

BT Trap Hg
Element Name: *BTTrapHg*

Report the mass of Hg recovered from the breakthrough section (Section 2) of the sorbent trap, in micrograms (µg), rounded to two decimal places.

Leave this field blank if the sample was accidentally lost, damaged, or broken and could not be analyzed, if the sample gas flow meter was "out-of-control", or if the sample gas volume reading for the initial or final hour of the sample collection period was missing or invalid.

Spike Trap Hg
Element Name: *SpikeTrapHg*

Report the mass of Hg recovered from the spiked section (Section 3) of the sorbent trap, in micrograms (µg), rounded to two decimal places.

Leave this field blank if the sample was accidentally lost, damaged, or broken and could not be analyzed, if the sample gas flow meter was "out-of-control", or if the sample gas volume reading for the initial or final hour of the sample collection period was missing or invalid.

Spike Reference Value
Element Name: *SpikeReferenceValue*

Report the mass of the pre-sampling Hg spike in micrograms (µg), calculated according to Equation 12B-1 in Performance Specification 12B, rounded to two decimal places.

Leave this field blank if the sample was accidentally lost, damaged, or broken and could not be analyzed, if the sample gas flow meter was "out-of-control", or if the sample gas volume reading for the initial or final hour of the sample collection period was missing or invalid.

Total Sample Volume DSCM
Element Name: *TotalSampleVolumeDSCM*

Report the total volume of dry gas metered, in dry standard cubic meters (dscm), rounded to two decimal places.

Leave this field blank if the sample was accidentally lost, damaged, or broken and could not be analyzed, if the sample gas flow meter was "out-of-control", or if the sample gas volume reading for the initial or final hour of the sample collection period was missing or invalid.

Reference SFSR Ratio
Element Name: *ReferenceSFSRRatio*

From the data recorded in the first hour of the sample collection period, determine the reference ratio of the unadjusted hourly stack gas volumetric flow rate to the average sample flow rate, (~~Stack Flow to Sampling Rate, or~~ i.e., the "SFSR" Ratio), according to Equation 12B-2 in Performance Specification 12B. Report the Reference SFSR Ratio to two decimal places.

~~(Note:~~ If the stack gas flow rate in the first hour of the sample collection period is a substitute data value, defer calculation of the reference ratio until a quality-assured hourly stack gas flow rate is obtained. Also, if the first hour of the sample collection period is a "transition hour" (i.e., an operating hour in which one pair of sorbent traps is removed from service and a second pair of traps is placed in service), defer calculation of the reference SFSR ratio for the "new" pair of traps until the next hour of the sample collection period~~)~~.

Maintain the SFSR ratio within ± 25% of the reference ratio for each subsequent hour of the sample collection period (see Table 12B-1 of Performance Specification 12B). However, do not calculate the ratio for hours in which the stack gas flow rate is a substitute data value or if the average sample flow rate is missing or invalid. For a discussion of how to report the hourly SFSR ratio during transition hours, see the "Special Considerations" in section 2.5.4.

Leave this field blank if the sample was accidentally lost, damaged, or broken and could not be analyzed, if the sample gas flow meter was "out-of-control", or if the sample gas volume reading for the initial or final hour of the sample collection period was missing or invalid.

Sampling Ratio Check Result Code
Element Name: *SamplingRatioCheckResultCode*

Based on the criterion in Table 12B-1 of Performance Specification 12B, report the appropriate code from Table 46 to indicate whether the ratio of the stack gas flow rate to the sampling rate was maintained within the required percentage, as follows:

Table 46
Sampling Ratio Check Result Codes and Descriptions

Code	Description
PASSED	Test was passed. The hourly ratio was maintained within 25% of the reference ratio throughout the sample collection period.
FAILED	Test was failed. The hourly ratio was not maintained within 25% of the reference ratio throughout the sample collection period.

Leave this field blank if the sample was accidentally lost, damaged, or broken and could not be analyzed, if the sample gas flow meter was "out-of-control", or if the sample gas volume reading for the initial or final hour of the sample collection period was missing or invalid.

Hg Concentration
Element Name: *HgConcentration*

Report the Hg concentration determined from the total Hg catch (sum of the mass collected in sections 1 and 2 of the sorbent trap) and the total volume of dry gas metered. Use Equation 12B-6 in Performance Specification 12B to calculate the Hg concentration, in µg/scm, rounded to three significant figures, using scientific notation, keeping only one digit to the left of the decimal point, and leaving no spaces in-between the characters. For example, if the Hg concentration is 0.0245 µg/scm, report 2.45-E-2.

Leave this field blank if the sample was accidentally lost, damaged, or broken and could not be analyzed, or if the sample gas volume reading for the initial or final hour of the sample collection period was missing or invalid.

Post Leak Check Result Code
Element Name: *PostLeakCheckResultCode*

Report the results of the post-test leak check conducted at the end of the sample collection period. If the post-test leak check is passed, report "PASSED," if the leak check is failed, report "FAILED".

Leave this field blank if the sample was accidentally lost, damaged, or broken and could not be analyzed, or if the sample gas volume reading for the initial or final hour of the sample collection period was missing or invalid.

Percent Breakthrough
Element Name: *PercentBreakthrough*

Report the percent breakthrough, calculated according to Equation 12B-5 in Performance Specification 12B, rounded to one decimal place.

Leave this field blank if the sample was accidentally lost, damaged, or broken and could not be analyzed, if the sample gas flow meter was "out-of-control", if the measured Hg concentration in the stack gas is less than 0.1 µg/m^3, or if the sample gas volume reading for the initial or final hour of the sample collection period was missing or invalid.

Percent Spike Recovery
Element Name: *PercentSpikeRecovery*

Report the percent spike recovery, calculated according to Equation 12B-4 in Performance Specification 12B, rounded to one decimal place.

Leave this field blank if the sample was accidentally lost, damaged, or broken and could not be analyzed, if the sample gas flow meter was "out-of-control", or if the sample gas volume reading for the initial or final hour of the sample collection period was missing or invalid.

Train QA Status Code
Element Name: *TrainQAStatusCode*

Report the appropriate code from Table 47 below to indicate the QA status of this sampling train.

Table 47
Train QA Status Codes and Descriptions

Code	Description
PASSED	The post-monitoring leak check, % breakthrough, stack flow-to-sample flow ratio, and % spike recovery criteria in PS 12B were all met, and the QA status of the sample flow meter was "in control".
FAILED	The QA status of the sample flow meter was "in control", but at least one of the following four QA/QC criteria in PS 12B was not met: the post-monitoring leak check; % breakthrough; stack flow-to-sample flow ratio; or % spike recovery.
INC	Gas Flow Meter data are incomplete (missing or invalid for the beginning or ending hour of the sample collection period)
EXPIRED	Required QA (calibration) was not performed on the sample flow meter component. The QA status of the flow meter is "out-of-control".
LOST	Trap was accidentally lost, damaged, or broken and could not be analyzed
UNCERTAIN	The post-monitoring leak check, % breakthrough, stack flow-to-sample flow ratio, and % spike recovery criteria in PS 12B were all met, and the QA status of the sample flow meter was "in control". However, the relative deviation (RD) criterion for the paired traps was not met

Sample Damage Explanation
Element Name: *SampleDamageExplanation*

Whenever the sample is accidentally lost, damaged, or broken and cannot be analyzed (i.e., the Train QA Status Code is "LOST"), provide a brief explanation of the reason why the sample could not be analyzed.