United States Environmental Protection Agency

Control Techniques Guidelines for the Oil and Natural Gas Industry (Draft)

[Page intentionally left blank]

EPA-453/P-15-001

August 2015

Control Techniques Guidelines for the Oil and Natural Gas Industry (Draft)

U.S. Environmental Protection Agency
Office of Air and Radiation
Office of Air Quality Planning and Standards
Sector Policies and Programs Division
Research Triangle Park, North Carolina

DISCLAIMER

This report has been reviewed by EPA's Office of Air Quality Planning and Standards and has been approved for publication. Mention of trade names or commercial products is not intended to constitute endorsement or recommendation for use.

TABLE OF CONTENTS

TABLE OF CONTENTS v
1.0 INTRODUCTION 1-1
2.0 BACKGROUND AND OVERVIEW 2-1
2.1 History of Federal Actions that Regulate VOC Emissions in the Oil and Natural Gas Industry 2-1
2.2 State and Local Regulations 2-2
2.3 Development of this Guideline 2-4
3.0 OVERVIEW OF THE OIL AND NATURAL GAS INDUSTRY AND SOURCES SELECTED FOR RACT RECOMMENDATIONS 3-1
3.1 Overview of the Oil and Natural Gas Industry 3-1
3.2 Sources Selected For RACT Recommendations 3-5
4.0 STORAGE VESSELS 4-1
4.1 Applicability 4-1
4.2 Process Description and Emission Sources 4-1
4.2.1 Process Description 4-1
4.2.2 Emissions Data 4-2
4.3 Available Controls and Regulatory Approaches 4-6
4.3.1 Available VOC Emission Control Options 4-6
4.3.2 Existing Federal, State and Local Regulations 4-15
4.4 Recommended RACT Level of Control 4-18
4.5 Factors to Consider in Developing Storage Vessel Compliance Procedures 4-20
4.5.1 Compliance Recommendations When Using a Control Device 4-20
5.0 COMPRESSORS 5-1
5.1 Applicability 5-1
5.2 Process Description and Emission Sources 5-1
5.2.1 Process Description 5-1
5.2.2 Emissions Data 5-5
5.3 Available Controls and Regulatory Approaches 5-8
5.3.1 Available VOC Emission Control Options 5-8
5.3.2 Existing Federal, State and Local Regulations 5-23
5.4 Recommended RACT Level of Control 5-24
5.5 Factors to Consider in Developing Compressor Compliance Procedures 5-26

5.5.1 Reciprocating Compressor Compliance Recommendations 5-26
5.5.2 Centrifugal Compressor Equipped with a Wet Seal Recommendations 5-27
5.5.3 Recommendations for Cover Design 5-27
5.5.4 Recommendations for Closed Vent Systems 5-28
6.0 PNEUMATIC CONTROLLERS 6-1
6.1 Applicability 6-1
6.2 Process Description and Emission Sources 6-2
6.2.1 Process Description 6-2
6.2.2 Emissions Data 6-4
6.3 Available Controls and Regulatory Approaches 6-8
6.3.1 Available VOC Emission Control Options 6-8
6.3.2 Existing Federal, State and Local Regulations 6-18
6.4 Recommended RACT Level of Control 6-20
6.4.1 Continuous Bleed Natural Gas-Driven Pneumatic Controllers Located at a Natural Gas Processing Plant 6-20
6.4.2 Continuous Bleed Natural Gas-Driven Pneumatic Controllers Located from the Wellhead to the Natural Gas Processing Plant or Point of Custody Transfer to an Oil Pipeline 6-22
6.5 Factors to Consider in Developing Pneumatic Controller Compliance Procedures 6-24
6.5.1 Oil and Natural Gas Production (Individual Continuous Bleed Pneumatic Controller with a Natural Gas Bleed Rate Greater than 6 scf Located from the Wellhead to the Natural Gas Processing Plant or Point of Custody Transfer to an Oil Pipeline) 6-24
6.5.2 Natural Gas Processing Segment (Individual Continuous Bleed Natural Gas-Driven Pneumatic Controller Located at a Natural Gas Processing Plant) 6-25
7.0 PNEUMATIC PUMPS 7-1
7.1 Applicability 7-1
7.2 Process Description and Emission Sources 7-2
7.2.1 Process Description 7-2
7.2.2 Emissions Data 7-4
7.3 Available Controls and Regulatory Approaches 7-6
7.3.1 Available VOC Emission Control Options 7-6
7.3.2 Existing Federal, State and Local Regulations 7-16
7.4 Recommended RACT Level of Control 7-17
7.5 Factors to Consider in Developing Pneumatic Pump Compliance Procedures 7-19

7.5.1 Oil and Natural Gas Production Segment Recommendations 7-19
7.5.2 Natural Gas Processing Segment Recommendations 7-19
8.0 EQUIPMENT LEAKS FROM NATURAL GAS PROCESSING PLANTS..... 8-1
8.1 Applicability 8-1
8.2 Process Description and Emission Sources 8-1
8.2.1 Process Description 8-1
8.2.2 Equipment Leak Emission Data and Emission Factors 8-2
8.3 Available Controls and Regulatory Approaches 8-7
8.3.1 Available VOC Emission Control Options 8-7
8.3.2 Existing Federal, State and Local Regulations 8-13
8.4 Recommended RACT Level of Control for Equipment Leaks from Equipment at Natural Gas Processing Plants 8-13
8.5 Factors to Consider in Developing Equipment Leak Compliance Procedures 8-14
9.0 FUGITIVE EMISSIONS FROM WELL SITES AND COMPRESSOR STATIONS 9-1
9.1 Applicability 9-1
9.2 Fugitive Emissions Description and Data 9-2
9.2.1 Fugitive Emissions Description 9-2
9.2.2. Emission Data and Emission Factors 9-3
9.3 Available Controls and Regulatory Approaches 9-16
9.3.1 Available VOC Emission Control Options 9-16
9.3.2 Existing Federal, State and Local Regulations 9-30
9.4 Recommended RACT Level of Control 9-31
9.5 Factors to Consider in Developing Fugitive Emissions RACT Procedures 9-34
9.5.1 Monitoring Recommendations 9-34
9.5.2 Repair Recommendations 9-36
APPENDIX Recommended RACT Model Rule Language ..... Appendix

LIST OF TABLES

Table 3-1. Summary of the Oil and Natural Gas Industry Emission Sources and Recommended RACT Included in this Guideline 3-6
Table 4-1. Major Studies Reviewed for Consideration of Emissions and Activity Data 4-3
Table 4-2. Average Oil and Condensate Production and Storage Vessel Emissions per Production Rate Bracket 4-5
Table 4-3. Total Capital Investment and Total Annual Costs of a Vapor Recovery Unit System 4-10
Table 4-4. Costs of Routing Emissions from an Existing Storage Vessel to a VRU 4-10
Table 4-5. Total Capital Investment and Total Annual Costs of a Combustor 4-14
Table 4-6. Costs of Routing Emissions from an Existing Storage Vessel to a Combustion Device ($/ton of VOC Reduced) 4-15
Table 4-7. Summary of Storage Vessel Regulations from Nine States 4-17
Table 5-1. Major Studies Reviewed for Emissions Data 5-5
Table 5-2. Methane Emission Factors for Reciprocating and Centrifugal Compressors 5-7
Table 5-3. Baseline Methane VOC Emission Estimates for Reciprocating and Centrifugal Compressors[a] 5-8
Table 5-4. Estimated Annual Reciprocating Compressor Emission Reductions from Increasing the Frequency of Rod Packing Replacement 5-12
Table 5-5. Cost of Control for Increasing the Frequency of Reciprocating Compressor Rod Packing Replacement 5-14
Table 5-6. Cost of Control of Replacing a Wet Seal Compressor with a Dry Seal Compressor 5-19
Table 5-7. Estimated Annual Centrifugal Compressor VOC Emission Reductions for Routing Wet Seal Fluid Degassing System to a Process 5-20
Table 5-8. VOC Cost of Control for Routing Wet Seal Fluid Degassing System to a Process 5-21
Table 5-9. Estimated Annual VOC Emission Reductions for Routing Wet Seal Fluid Degassing System to a Combustion Device 5-22

Table 5-10. Cost of Control for Routing Wet Seal Fluid Degassing System to a Combustion Device 5-23
Table 6-1. Major Studies Reviewed for Consideration of Emissions and Activity Data 6-4
Table 6-2. Average Emission Rates for High Bleed and Low Bleed Pneumatic Controllers in the Oil and Natural Gas Industry[a] 6-7
Table 6-3. Cost Projections for Representative Pneumatic Controllers[a] 6-9
Table 6-4. VOC Cost of Control for Replacing an Existing High Bleed Pneumatic Controller with a New Low Bleed Pneumatic Controller 6-10
Table 6-5. Compressor Power Requirements and Costs for Representative Instrument Air Systems[a] 6-14
Table 6-6. Estimated Capital and Annual Costs of Representative Instrument Air Systems ($2012) 6-15
Table 6-7. Cost of Control of Representative Instrument Air Systems in the Natural Gas Processing Segment ($2012) 6-15
Table 7-1. Major Studies Reviewed for Consideration of Emissions and Activity Data 7-5
Table 7-2. Average Emission Estimates per Pneumatic Device 7-6
Table 7-3. Cost of Compressor Replacement for Existing Instrument Air System 7-12
Table 7-4. VOC Cost of Control for Routing Natural Gas-Driven Pump Emissions to an Existing Combustion Device 7-13
Table 7-5. VOC Cost of Control for Routing Natural Gas-Driven Pump Emissions to a New Combustion Device 7-14
Table 7-6. VOC Cost of Control for Routing Natural Gas-Driven Pump Emissions to an Existing VRU 7-15
Table 7-7. VOC Cost of Control for Routing Natural Gas-Driven Pump Emissions to a New VRU 7-16
Table 8-1. Major Studies Reviewed for Consideration of Emissions and Activity Data 8-2
Table 8-2. Equipment Counts for Natural Gas Processing Model Plant 8-5
Table 8-3. Summary of Equipment Leak Frequency for Natural Gas 8-6
Table 8-4. Summary of VOC Equipment Leak Emission Factors for the Natural Gas Processing Model Plant 8-6
Table 8-5. Summary of the Gas Processing Model Plant VOC Cost of Control 8-10

Table 8-6. Summary of the Gas Processing Component VOC Cost of Control 8-11
Table 8-7. Summary of the Natural Gas Processing Model Plant VOC Cost of Control for Optical Gas Imaging and Method 21 Monitoring 8-12
Table 9-1. Major Studies Reviewed for Emissions and Activity Data 9-4
Table 9-2. Estimated Average Number of Wells per Site of New Well Completion in 2012 9-7
Table 9-3. Estimated Average Number of Wells per Two Acre Site of New Well Completion and Recompletion in 2012, by HPDI Basin and Type of Well (Oil or Natural Gas, Hydraulically Fractured or Not) 9-8
Table 9-4. Average Component Count for Natural Gas Well Site Model Plant 9-11
Table 9-5. Average Component Count for Oil Well Site Model Plant 9-11
Table 9-6. Oil and Natural Gas Production Operations Average TOC Emission Factors 9-12
Table 9-7. Estimated Fugitive VOC Emissions for Natural Gas Production Model Plant 9-13
Table 9-8. Estimated Fugitive VOC Emissions for Oil Well Site Model Plant 9-13
Table 9-9. Average Component Count for the Oil and Natural Gas Production Gathering and Boosting Station Model Plant 9-15
Table 9-10. Estimated Fugitive TOC and VOC Emissions for the Oil and Natural Gas Production Gathering and Boosting Station Model Plant 9-16
Table 9-11. Summary of the Model Plant VOC Cost of Control for the Annual OGI Monitoring Option 9-21
Table 9-12. Summary of the Model Plant VOC Cost of Control for the Semiannual OGI Monitoring Option 9-22
Table 9-13. Summary of the Model Plant VOC Cost of Control for the Quarterly OGI Monitoring Option 9-23
Table 9-14. Summary of the Model Plant VOC Cost of Control for the Annual 9-27
Table 9-15. Summary of the Model Plant VOC Cost of Control for the Semiannual 9-28
Table 9-16. Summary of the Model Plant VOC Cost of Control for the Quarterly 9-29

LIST OF FIGURES

Figure 3-1. Oil and Natural Gas Industry Operations 3-4

Figure 4-1. Conventional Vapor Recovery System 4-8
Figure 4-2. Schematic of a Typical Enclosed Combustion System 4-12
Figure 4-3. Basic Schematic of a Thermal Oxidizer 4-13

Figure 5-1. Typical Reciprocating Compressor Rod Packing System Diagram 5-2
Figure 5-2. Typical Centrifugal Compressor Wet Seal 5-3
Figure 5-3. Typical Centrifugal Compressor Tandem Dry Seal 5-4

Figure 6-1. Natural Gas Pneumatic Control System 6-13
Figure 6-2. Compressed Instrument Air Control System 6-13

ACRONYMS AND ABBREVIATIONS

Acronyms/Abbreviations	Description
ACA	Air Compliance Advisor
ANGA	America's Natural Gas Alliance
APCD	Air Pollution Control District
APEN	Air Pollutant Emission Notice
API	American Petroleum Institute
AQMD	Air Quality Management District
ARCADIS	a global consulting firm
bbl/day	barrels per day
BMP	best management practice
BACT	best available control technology
BOE/day	barrels of oil equivalent per day
BSER	best system of emission reduction
BTEX	benzene, toluene, ethylbenzene and xylenes
Btu	British thermal unit
Btu/scf	British thermal unit per standard cubic feet
CAA	Clean Air Act
CAPP	Canadian Association of Petroleum Producer's
CE indices	Chemical Engineering's index
CETAC-WEST	Canadian Environmental Technology Advancement Corporation-WEST
Cfm	cubic foot per minute
CFR	Code of Federal Regulations
CH4	Methane
CL Report	Carbon Limit Report
CMSA	Consolidated Metropolitan Statistical Area
CO	carbon monoxide
CO$T-AIR	a group of spreadsheet programs used to cover 12 control devices and one category of auxiliary equipment (ductwork)
CO_2	carbon dioxide
CTG	control techniques guidelines
E&P Tanks Program	is a personal computer-based software designed to use site-specific information to predict emission from petroleum production storage tanks
EIA	Economic Impact Analysis
ERG	Eastern Research Group
EVRU	ejector vapor recovery units
FIP	Federal Implementation Plan

Acronyms/Abbreviations	Description
FR	Federal Register
FRED	Federal Reserve Economic Data
gal/yr	gallon per year
GDP	gross domestic product
GHG	greenhouse gas
G	gram
GRI	Gas Research Institute
H_2S	hydrogen sulfide
HAP	hazardous air pollutants
HFC	Hydrofluorocarbon
HON	Hazardous Organic NESHAP
HPDI database	provides production data and web-enabled analytical software tools for a wide range of oil and gas related customers
ICF International	a firm that provides professional services and technology solutions in strategy and policy analysis, program management, project evaluation, and other services
Inj/With	injection/withdrawal components
IR	infrared
kg/hr/comp	kilogram per hour per component
kg/hr/source	kilogram per hour per source
kg/MMBtu	kilogram per million Btu
kPa	kilopascals
kW	Kilowatt
LAER	lowest achievable emission rate
lb/MMBtu	pounds per million Btu
LDAR	leak detection and repair
LLC	liquid level controller
Mcf	thousand cubic feet
MMcf/year	million cubic feet per year
MSA	Metropolitan Statistical Area
Mscf/cyl	thousand standard cubic feet per cylinder
Mscf/yr/component	thousand standard cubic feet per year per component
NA	Nonattainment
NESHAP	National Emission Standards for Hazardous Air Pollutants
NGL	natural gas liquids
NOx	nitrogen oxide
NSPS	New Source Performance Standards
NSR	New Source Review
O&M	operations & maintenance
OAQPS	Office of Air Quality Planning and Standards

Acronyms/Abbreviations	Description
OCCM	OAQPS Control Cost Manual
OEL	open-ended lines
OGI	optical gas imaging
OTR	Ozone Transport Region
OVA	organic vapor analyzer
PC	pressure controller
PG&E	Pacific Gas & Electric
PM	particulate matter
PNAS	Proceedings of the National Academy of Sciences
ppm	parts per million
Ppmv	parts per million by volume
PRD	pressure relief devices
PRV	pressure relief valve
PSD	prevention of significant deterioration
Psi	pounds per square inch
Psig	pounds per square inch gauge
PTE	potential to emit
RACT	reasonably available control technology
RBLC	RACT/BACT/LAER Clearinghouse
Scf	standard cubic feet
scfh-cylinder	standard cubic feet per hour-cylinder
Scfm	standard cubic feet per minute
Scfh	standard cubic feet per hour
SIP	State Implementation Plan
SO_2	sulfur dioxide
THC	total hydrocarbons
TOC	total organic compounds
Tpy	tons per year
TSD	technical support document
TVA	toxic vapor analyzer
U.S.	United States
U.S. EIA	U.S. Energy Information Administration
U.S. EPA	U.S. Environmental Protection Agency
VOC	volatile organic compound
VRU	vapor recovery unit
µg/m3	micrograms per cubic meter

1.0 INTRODUCTION

Section 172(c)(1) of the Clean Air Act (CAA) provides that state implementation plans (SIPs) for nonattainment areas must include "reasonably available control measures" including "reasonably available control technology" (RACT), for existing sources of emissions. CAA Section 182(b)(2)(A) provides that for moderate ozone nonattainment areas, states must revise their SIPs to include RACT for each category of volatile organic compound (VOC) sources covered by control techniques guidelines (CTG) document issued between November 15, 1990, and the date of attainment. Section 182(c) through (e) applies this requirement to States with ozone nonattainment areas classified as serious, severe and extreme. CAA Section 184(b) requires that states in ozone transport regions (OTRs) must revise their SIPs to implement RACT with respect to all sources of VOC in the state covered by a CTG issued before or after November 15, 1990. CAA Section 184 (a) establishes a single ozone transport region comprised of the states of Connecticut, Delaware, Maine, Maryland, Massachusetts, New Hampshire, New Jersey, New York, Pennsylvania, Rhode Island, Vermont and the Consolidated Metropolitan Statistical Area (CMSA) that includes the District of Columbia.

The U.S. Environmental Protection Agency (EPA) defines RACT as "the lowest emission limitation that a particular source is capable of meeting by the application of control technology that is reasonably available considering technological and economic feasibility." 44 FR 53761 (September 17, 1979).

This guideline is intended to provide state, local and tribal air agencies (hereafter, air agencies) with information to assist them in determining RACT for reducing VOC emissions from select oil and natural gas industry emission sources. In developing this guideline, the EPA, among other things, evaluated the sources of VOC emissions in the oil and natural gas industry and the available control approaches for addressing these emissions, including the costs of such approaches. Based on available information and data, the EPA provides recommendations for RACT for select oil and natural gas industry emission sources. Air agencies can use the recommendations in this guideline to inform their own determination as to what constitutes RACT for VOC for the oil and natural gas industry emission sources presented in this document in their particular nonattainment areas. The information contained in this document is provided only as guidance. This guidance does not change, or substitute for, requirements specified in

applicable sections of the CAA or the EPA's regulations; nor is it a regulation itself. This document does not impose any requirements on facilities in the oil and natural gas industry. It provides only recommendations for air agencies to consider in determining RACT. Air agencies are free to implement other technically-sound approaches that are consistent with the CAA and the EPA's implementing regulations.

The recommendations contained in this guideline are based on data and information currently available to the EPA. These general recommendations may not apply to a particular situation based upon the circumstances of a specific source. Regardless of whether an air agency chooses to implement the recommendations contained herein through their rules, or to issue rules that adopt different approaches for RACT for VOC from oil and natural gas industry sources, air agencies must submit their RACT rules to the EPA for review and approval as part of the SIP process. The EPA will evaluate the rules and determine, through notice and comment rulemaking in the SIP review process, whether the submitted rules meet the RACT requirements of the CAA and the EPA's regulations. To the extent an air agency adopts any of the recommendations in this guidance into its RACT rules, interested parties can raise questions and objections about the substance of this guidance and the appropriateness of the application of this guidance to a particular situation during the development of these rules and the EPA's SIP review process.

Section 182(b)(2) of the CAA requires that a CTG issued between November 15, 1990, and the date of attainment include the date by which states subject to CAA section 182(b) must submit SIP revisions in response to the CTG. Accordingly, EPA is providing a 2 year period, from issuance of the final CTG, for the required submittal.

2.0 BACKGROUND AND OVERVIEW

There have been several federal and state actions to reduce VOC emissions from certain emission sources in the oil and natural gas industry. A summary of these actions is provided below.

2.1 History of Federal Actions that Regulate VOC Emissions in the Oil and Natural Gas Industry

In 1979, the EPA listed crude oil and natural gas production on its priority list of source categories for promulgation of NSPS (44 FR 49222, August 21, 1979). Since the 1979 listing, the EPA has promulgated performance standards to regulate VOC emissions from production, processing, transmission and storage and sulfur dioxide (SO_2) emissions from natural gas processing emission sources. On June 24, 1985 (50 FR 26122), the EPA promulgated an NSPS for natural gas processing plants that addressed VOC emissions from leaking components (40 CFR part 60, subpart KKK). On October 1, 1985 (50 FR 40158), a second NSPS was promulgated for natural gas processing plants that regulated SO_2 emissions (40 CFR part 60, subpart LLL). On August 16, 2012 (77 FR 49490), the EPA finalized its review of NSPS standards for the listed oil and natural gas source category and revised the NSPS for VOC from leaking components at natural gas processing plants and the NSPS for SO_2 emissions from natural gas processing plants. At that time, the EPA also established standards for certain oil and natural gas emission sources not covered by the existing standards. In addition to the emission sources that were covered previously, the EPA established new standards to regulate VOC emissions from hydraulically fractured gas wells, centrifugal compressors, reciprocating compressors, pneumatic controllers and storage vessels. In 2013 (78 FR 58416) and 2014 (79 FR 79018), the EPA amended the standards set in 2012 in order to improve implementation of the standards. In 2015, the EPA proposed new standards to regulate methane and VOC emissions across the oil and natural gas source category. Specifically, the EPA proposed both methane and VOC standards for several emission sources not currently covered by the NSPS (i.e., hydraulically fractured oil well completions, pneumatic pumps, and fugitive emissions from well sites and compressor stations). In addition, the EPA proposed methane standards for certain emission sources that are currently regulated for only VOC (i.e., hydraulically fractured gas well

completions, centrifugal compressors, reciprocating compressors, pneumatic controllers, storage vessels and equipment leaks at natural gas processing plants). With respect to certain equipment that are used across the industry, the current NSPS regulates only a subset of these equipment (pneumatic controllers, centrifugal compressors, reciprocating compressors). The proposed amendents would establish methane standards for these equipment and extend the current VOC standards to unregulated equipment. Although not regulated under the oil and natural gas NSPS, internal combustion and combustion turbines used in the oil and natural gas industry are covered under separate NSPS specific to engines and turbines.

In addition to NSPS issued to regulate VOC emissions from the oil and gas industry, the EPA also published a CTG that recommended the control of VOC emissions from equipment leaks from natural gas processing plants in 1983 (1983 CTG).[1] This CTG is the only CTG issued since 1983 for the oil and natural gas industry.

2.2 State and Local Regulations

Several states regulate VOC emissions from storage vessels in the oil and natural gas industry. There are also a few states (e.g., Colorado, Wyoming and Montana) that have established specific permitting requirements or regulations that control VOC emissions from other emission sources in the oil and natural gas industry (e.g., compressors, pneumatics, fugitive emission components):

(1) The Colorado Department of Public Health and Environment, Air Quality Control Commission has developed emission regulations 3, 6 and 7 that apply to oil and natural gas industry emission sources in Colorado. (https://www.colorado.gov/pacific/cdphe/summary-oil-and-gas-emissions-requirements)

(2) Montana requires oil and gas well facilities to control emissions from the time the well is completed until the source is registered or permitted (Registration of Air Contaminant Sources Rule, Rule 17.8.1711, Oil or Gas Well Facilities Emission Control Requirements). (http://www.mtrules.org/gateway/ruleno.asp?RN=17%2E8%2E1711.)

(3) The Wyoming Department of Environmental Quality limits VOC emissions from existing sources in ozone nonattainment areas and has issued specific permitting guidance that

[1] U.S. Environmental Protection Agency, Office of Air Quality Planning and Standards, Research Triangle Park, NC, 27711. *Guideline Series. Control of Volatile Organic Compound Equipment Leaks from Natural Gas/Gasoline Processing Plants.* December 1983. EPA-450/3-83-007

apply to oil and natural gas facilities. (Chapter 6, Section 2 Permitting Guidance, last revised in September 2013). (http://www.oilandgasbmps.ort/laws/wyoming_law.php.)

In some states, general permits have been developed for oil and natural gas facilities. General permits are permits where all the terms and conditions of the permit are developed for a given industry and authorize the construction, modification, and/or operation of facilities that meet the terms and conditions. For example, West Virginia, Ohio and Pennsylvania have developed General Air Permits. The Pennsylvania Department of Environmental Protection has issued a General Permit, General Plan Approval and Permit Exemption 38 for natural gas dispensing facilities and oil and gas exploration, development and production operations. Pennsylvania also applies conditions on flaring of emissions. Under the Permit 38 exemptions, there are criteria set out for the oil and natural gas industry that include unconditionally exempt and conditionally exempt criteria. Unconditionally exempt operations/equipment include conventional wells, conventional wellheads and associated equipment, well-drilling, completion and work-over activities, and non-road engines. Unconventional wells, wellheads and associated equipment (including equipment components, storage vessels) are conditionally exempt. Conditions include compliance with 40 CFR part 60, subpart OOOO and Pennsylvania's General Permit 5 (GP-5) and a demonstration that the combined VOC emissions from all sources at a facility are less than 2.7 tons per year (tpy) on a 12-month rolling basis. For oil and natural gas facilities that do not meet these conditions, a case-by-case plan approval is required.[2]

There may also be local permit requirements for control of VOC emissions from existing sources of VOC emissions in the oil and natural gas industry, such as those required by the Bay Area Air Quality Management District (BAAQMD) for pneumatic controllers. The BAAQMD requires that a permit to operate applicant provide the number of high bleed and low bleed pneumatic devices in their permit application. Facilities that use high bleed devices might be required to provide device-specific bleed rates and supporting documentation for each high bleed device. In cases where emissions are high from high bleed devices, BAAQMD might require that

[2] Pennsylvania Department of Environmental Protection. *Comparison of Air Emission Standards for the Oil & Natural Gas Industry* (Well Pad Operations, Natural Gas Compressor Stations, and Natural Gas Processing Facilities). May 23, 2014.

the facility conduct fugitive monitoring and/or control requirements under conditions of their permit to operate[3] on a case-by-case basis.

We conducted a search of the EPA's RACT/BACT/LAER Clearinghouse (RBLC) and identified several draft and final permits that covered some of the sources evaluated for RACT in this guideline. The controls specified in these permits are similar to the control options evaluated in this guideline.[4]

We considered these existing state and local requirements limiting VOC emissions from the oil and natural gas industry in preparing this guideline.

2.3 Development of this Guideline

As discussed in section 2.1 of this chapter, the 2012 NSPS established VOC emission standards for new and modified sources. This guideline addresses existing sources of VOC emissions and provides recommendations for RACT for the oil and natural gas industry. We developed our RACT recommendations after reviewing the 1983 CTG, the oil and natural gas NSPS, existing state and local VOC emission reduction approaches, and information on costs, emissions and available VOC emission control technologies. In April 2014, the EPA released five technical white papers on potentially significant sources of emissions in the oil and natural gas industry. The white papers focused on technical issues covering emissions and mitigation techniques that target methane and VOC. We consulted the white papers, along with the input we received from the peer reviewers and the public, when evaluating and recommending a RACT level of control.

This guideline evaluated potential RACT control options for emission sources that are regulated or proposed to be regulated under the oil and natural gas NSPS. This guideline did not evaluate hydraulically fractured oil and natural gas well completions performed on existing wells because these operations are considered modifications and, therefore, subject to the NSPS.

Several of the technical support documents (TSDs) prepared in support of the NSPS actions for the oil and natural gas industry include data and analyses considered in developing RACT recommendations in this guideline. To the extent that the data and analyses are also

[3] Cheng, Jimmy. *Permit Handbook. Chapter 3.5 Natural Gas Facilities and Crude Oil Facilities.* Bay Area Air Quality Management District. September 16, 2013.
[4] RACT/BACT/LAER Clearinghouse website: http://cfpub.epa.gov/RBLC/

relevant to control options for existing sources, they are referred to throughout this guidance document as follows:

(1) The TSD for the 2011 NSPS proposal, published in July, 2011 is referred to as the "2011 NSPS TSD".[5]

(2) The supplemental TSD for the 2012 final NSPS standards, published in April, 2012 is referred to as the "2012 NSPS TSD" or "2012 NSPS STSD"[6]

(3) The TSD for the 2015 proposed NSPS standards is referred to as the "2015 NSPS TSD".[7]

Additionally, emissions information and counts for various emission sources were summarized from facility-level data submitted to the Greenhouse Gas Reporting Program (GHGRP)[8] and data used to calculate national emissions in the Inventory of U.S. Greenhouse Gas Emissions and Sinks.[9] The published data from 2013 was used for various portions of the analysis. For the purposes of this document these data sources are referred to as the "GHGRP" and the "GHG Inventory".

Most of the VOC emission estimates presented in this document are based on methane emissions because the available emissions information we had for the evaluated sources are for methane. We calculated VOC emissions using ratios of methane to VOC in the gas for the different segments of the industry. These ratios, and the procedures used to calculate them, are documented in a memorandum characterizing gas composition developed during the NSPS process. [10] Herein, we refer to this memorandum as the "2011 Gas Composition Memorandum'. Because methane emissions are the basis for most of our VOC emissions estimates, in several

---

[5] U.S. Environmental Protection Agency. *Oil and Natural Gas Sector: Standards of Performance for Crude Oil and Natural Gas Production, Transmission, and Distribution – Background Technical Support Document for Proposed Standards*. July 2011. EPA-453/R-11002.

[6] U.S. Environmental Protection Agency. *Oil and Natural Gas Sector: Standards of Performance for Crude Oil and Natural Gas Production, Transmission, and Distribution - Background Supplemental Technical Support Document for the Final New Source Performance Standards*. April 2012. Docket ID No. EPA-HQ-OAR-2010-0505-4550.

[7] U.S. Environmental Protection Agency. *Oil and Natural Gas Source Category: Standards of Performance for Crude Oil and Natural Gas Production, Transmission, and Distribution - Background Technical Support Document for the Proposed Amendments to the New Source Performance Standards.* August 2015.

[8] U.S. Environmental Protection Agency. Mandatory Reporting of Greenhouse Gases from Petroleum and Natural Gas Systems – Subpart W. Washington, DC. November 2010. (Reported Data: http://www.epa.gov/ghgreporting/reporters/subpart/w-reported.html)

[9] U.S. EPA. Inventory of U.S. Greenhouse Gas Inventory and Sinks. 1990 - 2012. Available at http://www.epa.gov/climatechange/ghgemissions/usinventoryreport/archive.html

[10] Memorandum to Bruce Moore, U.S. EPA from Heather Brown, EC/R. *Composition of Natural Gas for Use in the Oil and Natural Gas Sector Rulemaking*. July 2011. Docket ID No. EPA-HQ-OAR-2010-0505-0084.

instances where we provide VOC emissions per source/model plant, we also provide the methane emissions that are the basis for our VOC emissions estimates.

We have divided the remainder of this document into seven chapters and an appendix. Chapter three describes the oil and natural gas industry and a summary of our RACT recommendations presented in this guideline. Chapters four through nine describe the oil and natural gas emission sources that we evaluated for our RACT recommendations (i.e., storage vessels, compressors, pneumatic controllers, pneumatic pumps, equipment component leaks from natural gas processing plants and fugitive emissions from well sites and compressor stations), available control and regulatory approaches (including existing federal, state and local requirements) and the potential emission reductions and costs associated with available control and regulatory approaches for a given emission source. The appendix provides example model rule language that can be used by states if they choose to adopt the recommended RACT level of control presented in this document.

3.0 OVERVIEW OF THE OIL AND NATURAL GAS INDUSTRY AND SOURCES SELECTED FOR RACT RECOMMENDATIONS

Section 3.1 presents an overall description of the oil and natural gas industry and section 3.2 presents the VOC emission sources for which we are recommending RACT within the oil and natural gas industry.

3.1 Overview of the Oil and Natural Gas Industry

The oil and natural gas industry includes oil and natural gas operations involved in the extraction and production of crude oil and natural gas, as well as the processing, transmission and distribution of natural gas. For oil, the industry includes all operations from the well to the point of custody transfer at a petroleum refinery. For natural gas, the industry includes all operations from the well to the customer. For purposes of this document, the oil and natural gas operations are separated into four segments: (1) oil and natural gas production, (2) natural gas processing, (3) natural gas transmission and storage and (4) natural gas distribution. We briefly discuss each of these segments below.

For purposes of this guideline, oil and natural gas production includes onshore operations. Production operations include the wells and all related processes used in the extraction, production, recovery, lifting, stabilization and separation or treating of oil and/or natural gas (including condensate). Production components may include, but are not limited to, wells and related casing head, tubing head and "Christmas tree" piping, as well as pumps, compressors, heater treaters, separators, storage vessels, pneumatic devices and dehydrators. Production operations also include well drilling, completion and recompletion processes, which include all the portable non-self-propelled apparatus associated with those operations. Production sites include the "pads" where the wells are located and stand-alone sites where oil, condensate, produced water and natural gas from several wells may be separated, stored and treated. The production segment also includes the low pressure, small diameter, gathering pipelines and related components that collect and transport the oil, natural gas and other materials and wastes from the wells to the refineries or natural gas processing plants. These are also referred to as "flow lines" and "sales lines."

There are two basic types of wells: Oil wells and natural gas wells. Oil wells can have "associated" natural gas that is separated and processed or the crude oil can be the only product processed. Once the crude oil is separated from water and other impurities, it is essentially ready to be transported to the refinery via truck, railcar or pipeline. The petroleum refining industry is considered separately from the oil and natural gas industry. Therefore, at the point of custody transfer at the refinery, the oil leaves the oil and natural gas industry and enters the petroleum refining industry.

Gas from natural gas wells is primarily made up of methane. However, whether natural gas is associated natural gas from oil wells, or non-associated natural gas from natural gas or condensate wells, it commonly exists in mixtures with other hydrocarbons. These hydrocarbons are often referred to as natural gas liquids (NGL). They are sold separately and have a variety of uses. The raw natural gas often contains water vapor, hydrogen sulfide (H_2S), carbon dioxide (CO_2), helium, nitrogen and other compounds.

Natural gas processing consists of separating certain hydrocarbons and fluids from the natural gas to produce "pipeline quality" dry natural gas. While some of the processing can be accomplished in the production segment, the complete processing of natural gas takes place in the natural gas processing segment. Natural gas processing operations separate and recover NGL or other non-methane gases and liquids from a stream of produced natural gas through components performing one or more of the following processes: oil and condensate separation, water removal, separation of natural gas liquids, sulfur and CO_2 removal, fractionation of NGL and other processes, such as the capture of CO_2 separated from natural gas streams for delivery outside the facility.

The pipeline quality natural gas leaves the processing segment and enters the transmission and storage segment. Pipelines in the natural gas transmission and storage segment can be interstate pipelines that carry natural gas across state boundaries or intrastate pipelines that transport the gas within a single state. While interstate pipelines may be of a larger diameter and operated at a higher pressure, the basic components are the same. To ensure that the natural gas flowing through any pipeline remains pressurized, compression of the gas is required periodically along the pipeline. This is accomplished by compressor stations usually placed at intervals between 40 and 100 miles along the pipeline. At a compressor station, the natural gas

enters the station, where it is compressed by reciprocating or centrifugal compressors. Compressors are mechanical devices that increase the pressure of natural gas and allow the natural gas to be transported from the production site, through the supply chain, and to the consumer. In the production segment, compressors are used at the wellhead to compress gas for fluids removal and pressure equalization with gathering equipment systems. However, the primary use of compressors is in the natural gas processing, transmission and storage (particularly underground storage) segments of the industry.

In addition to the pipelines and compressor stations, the natural gas transmission and storage segment includes aboveground and underground storage facilities. Underground natural gas storage includes subsurface storage, which typically consists of depleted natural gas or oil reservoirs and salt dome caverns used for storing natural gas. One purpose of this storage is for load balancing (equalizing the receipt and delivery of natural gas). At an underground storage site, there are typically other processes, including compression, dehydration and flow measurement.

The distribution segment is the final step in delivering natural gas to customers. The natural gas enters the distribution segment from delivery points located on interstate and intrastate transmission pipelines to business and household customers. Natural gas distribution systems consist of thousands of miles of piping, including mains and service pipelines to the customers. Distribution systems sometimes have compressor stations, although they are considerably smaller than transmission compressor stations.

Distribution systems include metering stations, which allow distribution companies to monitor the natural gas in the system. Essentially, these metering stations measure the flow of natural gas and allow distribution companies to track natural gas as it flows through the system. Figure 3-1 presents a schematic of oil and natural gas sector operations.

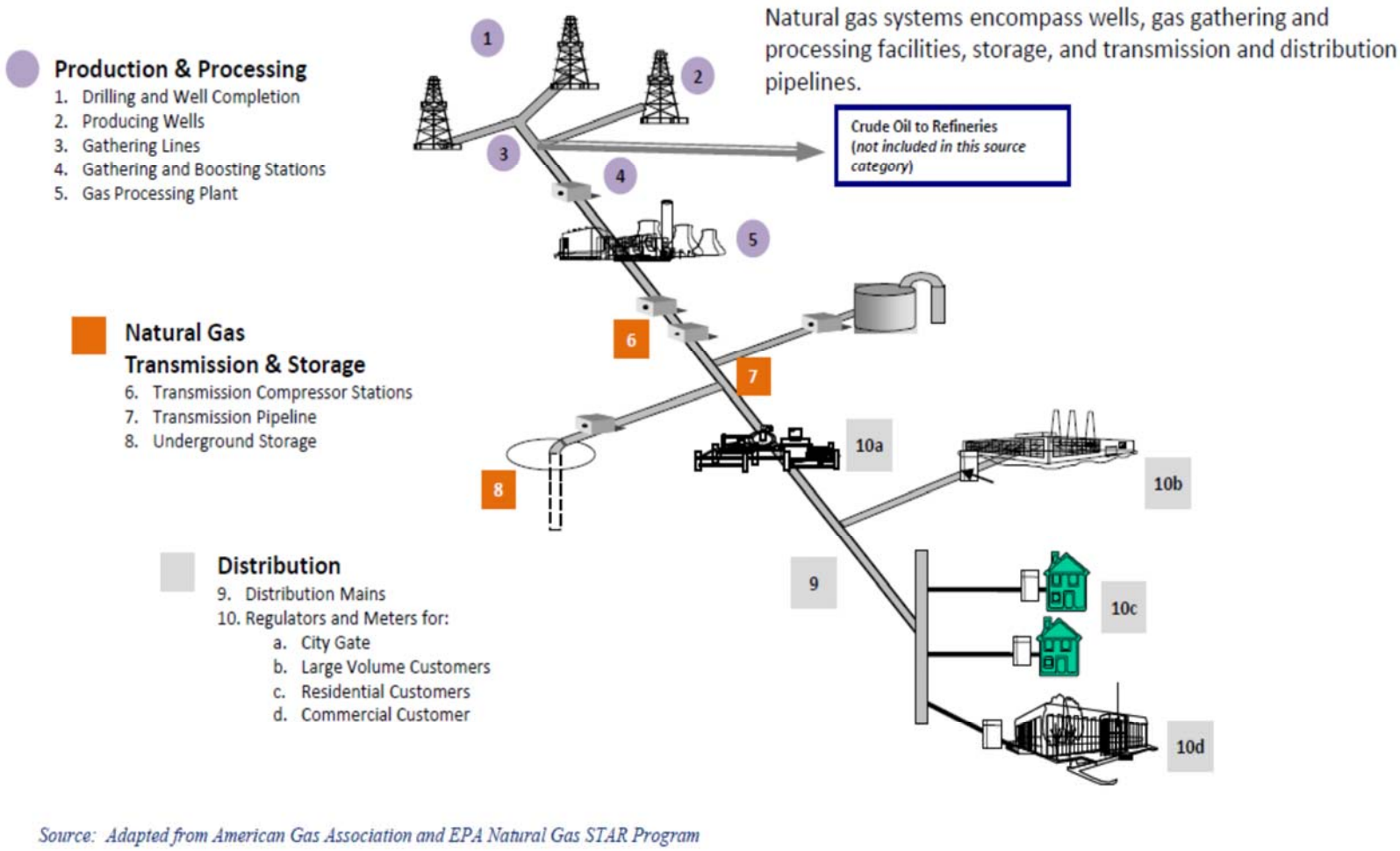

Source: Adapted from American Gas Association and EPA Natural Gas STAR Program

Figure 3-1. Oil and Natural Gas Sector Operations

3.2 Sources Selected For RACT Recommendations

This CTG covers select sources of VOC emissions in the onshore production and processing segments of the oil and natural gas industry (i.e., pneumatic controllers, pneumatic pumps, compressors, equipment leaks, fugitive emissions) and storage vessel VOC emissions in all segments (except distribution) of the oil and natural gas industry. These sources were selected for RACT recommendations because they are significant sources of VOC emissions. As mentioned in section 2.3, the VOC RACT recommendations contained in this document were made based on the review of the 1983 CTG, the oil and natural gas NSPS, existing state and local VOC emission reduction approaches, and information on emissions, available VOC emission control technologies and costs obtained since issuance of these NSPS.

In considering costs, we compared control options and estimated costs and emission impacts of multiple emission reduction options under consideration. Recommendations are presented in this guideline for the subset of existing sources in the oil and natural gas industry where the application of controls is judged reasonable, given the availability of demonstrated control technologies, emission reductions that can be achieved and the cost of control.

Table 3-1 presents a summary of the oil and natural gas emission sources and recommended RACT included in this guideline.

Table 3-1. Summary of the Oil and Natural Gas Industry Emission Sources and Recommended RACT Included in this Guideline

Emission Source	Applicability	RACT Recommendations
Storage Vessels	Individual storage vessel.	95 percent reduction of VOC emissions from storage vessels with a potential to emit (PTE) greater than or equal to 6 tpy.
Pneumatic Controllers	Individual continuous bleed, natural gas-driven pneumatic controller located at a natural gas processing plant.	Natural gas bleed rate of zero scfh (unless there are functional needs, including but not limited to response time, safety and positive actuation, requiring a bleed rate greater than zero scfh).
	Individual continuous bleed natural gas-driven pneumatic controller located from the wellhead to the natural gas processing plant or point of custody transfer to an oil pipeline.	Natural gas bleed rate less than or equal to 6 scfh (unless there are functional needs, including but not limited to response time, safety and positive actuation, requiring a bleed rate greater than 6 scfh).
Pneumatic Pumps	Individual natural gas-driven chemical/methanol and diaphragm pump located at a natural gas processing plant.	Zero natural gas emissions.
	Individual natural gas-driven chemical/methanol and diaphragm pump at locations other than natural gas processing plants from the wellhead to the point of custody transfer to the natural gas transmission and storage segment.	-If there is an existing control device at the location of the pneumatic pump, reduce VOC emissions from each gas-driven chemical/methanol and diaphragm pump at the location by 95 percent or greater. - If there is no existing control device at the location of the pneumatic pump, submit a certification that there is no device.
Compressors (Centrifugal and Reciprocating)	Individual reciprocating compressor located between the wellhead and point of custody transfer to the natural gas transmission and storage segment.	Reduce VOC emissions by replacing reciprocating compressor rod packing after 26,000 hours of operation or 36 months since the most recent rod packing replacement. Alternatively, route rod packing emissions to a process through a closed vent system under negative pressure.

Emission Source	Applicability	RACT Recommendations
	Individual reciprocating compressor located at a well site, or an adjacent well site and servicing more than one well site	RACT would not apply.
	Individual centrifugal compressor using wet seals that is located between the wellhead and point of custody transfer to the natural gas transmission and storage segment.	Reduce VOC emissions from each centrifugal compressor wet seal fluid gassing system by 95 percent or greater.
	Individual centrifugal compressor using wet seals located at a well site, or an adjacent well site and servicing more than one well site.	RACT would not apply.
	Individual centrifugal compressor using dry seals.	RACT would not apply.
Equipment Leaks	Equipment components in VOC service located at a natural gas processing plant.	Implement the 40 CFR part 60, subpart VVa leak detection and repair (LDAR) program for natural gas processing plants constructed or modified on or before August 23, 2011.
Fugitive Emissions	Individual well site with wells that produce, on average, greater than 15 barrel equivalents per day per well.	Implement a semiannual optical gas imaging (OGI) monitoring and repair program.
	Individual compressor station located from the wellhead to the point of custody transfer to the natural gas transmission and storage segment or point of custody transfer to an oil pipeline.	Implement an OGI monitoring and repair program.

4.0 STORAGE VESSELS

Storage vessels are significant sources of VOC emissions in the oil and natural gas industry. This chapter provides a description of the types of storage vessels present in the oil and natural gas industry, and provides VOC emission estimates for storage vessels, in terms of mass of emissions per throughput, for both crude oil and condensate storage vessels. This chapter also presents control techniques used to reduce VOC emissions from storage vessels, along with their costs and potential emission reductions. Finally, this chapter provides a discussion of our recommended RACT for storage vessels.

4.1 Applicability

For purposes of this guideline, the emissions and emission controls discussed herein would apply to a tank or other vessel in the oil and natural gas industry that contains an accumulation of crude oil, condensate, intermediate hydrocarbon liquids, or produced water, and that is constructed primarily of non-earthen materials (such as wood, concrete, steel, fiberglass, or plastic) that provide structural support. The emissions and emission controls discussed herein would not apply to the following vessels:

(1) Vessels that are skid-mounted or permanently attached to something that is mobile (such as trucks, railcars, barges or ships), and are intended to be located at a site for less than 180 consecutive days.

(2) Process vessels such as surge control vessels, bottoms receivers or knockout vessels.

(3) Pressure vessels designed to operate in excess of 204.9 kilopascals and without emissions to the atmosphere.

4.2 Process Description and Emission Sources

4.2.1 Process Description

Storage vessels in the oil and natural gas industry are used to hold a variety of liquids, including crude oil, condensates, produced water, etc. Underground crude oil contains many lighter hydrocarbons in solution. When the oil is brought to the surface and processed, many of the dissolved lighter hydrocarbons (as well as water) are removed through a series of high-pressure and low-pressure separators. Crude oil under high pressure conditions is passed through

either a two-phase separator (where the associated gas is removed and any oil and water remain together) or a three-phase separator (where the associated gas is removed and the oil and water are also separated). At the separator, low pressure gas is physically separated from the high pressure oil. The remaining low pressure oil is then directed to a storage vessel where it is stored for a period of time before being transported off-site. Much of the remaining hydrocarbon gases in the oil are released from the oil as vapors in the storage vessels. Storage vessels are typically installed with similar or identical vessels in a group, referred to in the industry as a tank battery.

Emissions of the hydrocarbons from storage vessels are a function of working, breathing (or standing), and flash losses. Working losses occur when vapors are displaced due to the emptying and filling of storage vessels. Breathing losses are the release of gas associated with temperature fluctuations and other equilibrium effects. Flash losses occur when a liquid with entrained gases is transferred from a vessel with higher pressure to a vessel with lower pressure, thus allowing entrained gases or a portion of the liquid to vaporize or flash. In the oil and natural gas industry, flashing losses occur when crude oils or condensates flow into a storage vessel from a processing vessel operated at a higher pressure. Typically, the larger the pressure drop, the more flash emissions will occur in the storage vessel. Temperature of the liquid may also influence the amount of flash emissions. The volume of gas vapor emitted from a storage vessel depends on many factors. Lighter crude oils flash more hydrocarbons than heavier crude oils. In storage vessels where the oil is frequently cycled and the overall throughput is high, working losses are higher. Additionally, the operating temperature and pressure of oil in the separator dumping into the storage vessel will affect the volume of flashed gases coming out of the oil.

The composition of the vapors from storage vessels varies, and the largest component is methane, but also may include ethane, butane, propane, and HAP such as BTEX, and n-hexane.

4.2.2 Emissions Data

4.2.2.1 Summary of Major Studies and Emissions

Given the potentially significant emissions from storage vessels, there are numerous studies and reports available that estimate storage vessel emissions. We consulted several of these studies and reports to evaluate the emissions and emission reduction options for storage vessels. Table 4-1 presents a summary of the references for these reports, along with an indication of the type of information available in each reference.

Table 4-1. Major Studies Reviewed for Consideration of Emissions and Activity Data[a,b]

Report Name	Affiliation	Year of Report	Activity Factors	Emissions Data	Control Options
VOC Emissions from Oil and Condensate Storage Tanks	Texas Environmental Research Consortium	2009	Regional	X	X
Upstream Oil and Gas Storage Tank Project Flash Emissions Models Evaluation – Final Report	Texas Commission on Environmental Quality	2009	Regional	X	
Initial Economics Impact Analysis for Proposed State Implementation Plan Revisions to the Air Quality Control Commission's Regulation Number 7	Colorado Air Quality Control Commission	2008	NA		X
E&P TANKS	API		National	X	
Inventory of U.S. Greenhouse Gas Emissions and Sinks	EPA	Annual	National	X	
Greenhouse Gas Reporting Program (Annual Reporting: Current Data Available for 2011-2013)[C]	EPA	2014	Facility-Level	X	X

NA = Not Applicable

[a.] U.S. Environmental Protection Agency. *Oil and Natural Gas Sector: Standards of Performance for Crude Oil and Natural Gas Production, Transmission, and Distribution - Background Supplemental Technical Support Document for the Final New Source Performance Standards*. April 2012. EPA Docket ID No. EPA-HQ-OAR-2010-0505-4550.

[b.] U.S. Environmental Protection Agency. *Oil and Natural Gas Sector: Standards of Performance for Crude Oil and Natural Gas Production, Transmission, and Distribution - Technical Support*. July 2011. EPA-453/R-11-002.

[c.] U.S. Environmental Protection Agency. *Greenhouse Gas Emissions Reporting From the Petroleum and Natural Gas Industry: Background Technical Support Document*. Climate Change Division. Washington, DC. November 2014.

4.2.2.2 Representative Storage Vessel Baseline Emissions

Storage vessels vary in size and throughputs. In support of the 2013 NSPS, average storage vessel emissions, in terms of mass of emissions per throughput, were developed for both crude oil and condensate storage vessels.[11] We also developed mass emissions per throughput estimates using the American Petroleum Institute's (API's) E&P Tanks program and more than

[11] Brown, Heather, EC/R Incorporated. Memorandum prepared for Bruce Moore, EPA/OAQPS/SPPD/FIG. *Revised Analysis to Determine the Number of Storage Vessels Projected to be Subject to New Source Performance Standards for the Oil and Natural Gas Sector*. 2013.

100 storage vessels across the country with varying characteristics.[12] The VOC emissions per throughput estimates used for this analysis are:

(1) Uncontrolled VOC Emissions from Crude Oil Storage Vessels = 0.214 tpy VOC/barrel per day (bbl/day); and

(2) Uncontrolled VOC Emissions from Condensate Storage Vessels = 2.09 tpy VOC/bbl/day.

On a nationwide basis, there are a wide variety of storage vessel sizes, as well as rates of throughput for each tank. Emissions are directly related to the throughput of liquids for a given storage vessel; therefore, in support of the 2013 NSPS, we adopted production rate brackets developed by the U.S. Energy Information Administration (EIA) for our emission estimates. To estimate the emissions from an average storage vessel within each production rate bracket, we developed average production rates for each bracket. This average was calculated using the EIA published nationwide production per well per day for each production rate bracket from 2006 through 2009. Table 4-2 presents the average oil production and condensate production in barrels per well per day. For this analysis, we considered the liquid produced (as reported by the EIA) from oil wells to be crude oil and from gas wells to be condensate. Table 4-2 presents the average VOC emissions for each storage vessel within each production rate bracket calculated by applying the average production rate (bbl/day) to the VOC emissions per throughput estimates (tpy VOC/bbl/day).

[12] American Petroleum Institute. *Production Tank Emissions Model*. *E&P Tank Version 2.0. A Program for Estimating Emissions from Hydrocarbon Production Tanks*. Software Number 4697. April 2000.

Table 4-2. Average Oil and Condensate Production and Storage Vessel Emissions per Production Rate Bracket[13]

Production Rate Bracket (BOE/day)[a]	Oil Wells		Gas Wells	
	Average Oil Production Rate per Oil Well (bbl/day)[b]	Crude Oil Storage Vessel VOC Emissions (tpy)[c]	Average Condensate Production Rate per Gas Well (bbl/day)[b]	Condensate Storage Vessel VOC Emissions (tpy)[c]
0-1	0.385	0.083	0.0183	0.038
1-2	1.34	0.287	0.0802	0.168
2-4	2.66	0.570	0.152	0.318
4-6	4.45	0.953	0.274	0.573
6-8	6.22	1.33	0.394	0.825
8-10	8.08	1.73	0.499	1.04
10-12	9.83	2.11	0.655	1.37
12-15	12.1	2.59	0.733	1.53
15-20	15.4	3.31	1.00	2.10
20-25	19.9	4.27	1.59	3.32
25-30	24.3	5.22	1.84	3.85
30-40	30.5	6.54	2.55	5.33
40-50	39.2	8.41	3.63	7.59
50-100	61.6	13.2	5.60	11.7
100-200	120	25.6	12.1	25.4
200-400	238	51.0	23.8	49.8
400-800	456	97.7	44.1	92.3
800-1,600	914	196	67.9	142
1,600-3,200	1,692	363	148	311
3,200-6,400	3,353	719	234	490
6,400-12,800	6,825	1,464	891	1,864
> 12,800[d]	0	0	0	0

Minor discrepancies may be due to rounding.

[a] BOE=Barrels of Oil Equivalent

[b] Oil and condensate production rates published by EIA. "US Total Distribution of Wells by Production Rate Bracket." http://www.eia.doe.gov/pub/oil_gas/petrosystem/us_table.html.

[c] Oil storage vessel VOC emission factor = 0.214 tpy VOC/bbl/day. Condensate storage vessel VOC emission factor = 2.09 tpy/bbl/day.

[d] There were no new oil and gas well completions in 2009 for this rate category. Therefore, average production rates were set to zero.

[13] Brown, Heather, EC/R Incorporated. Memorandum prepared for Bruce Moore, EPA/OAQPS/SPPD/FIG. *Revised Analysis to Determine the Number of Storage Vessels Projected to be Subject to New Source Performance Standards for the Oil and Natural Gas Sector*. 2013.

4.3 Available Controls and Regulatory Approaches

In analyzing available controls for storage vessels, we reviewed information obtained in support of the 2012 NSPS and the 2013 NSPS actions, control techniques identified in the Natural Gas STAR program, and existing state regulations that require control of VOC emissions from storage vessels in the oil and natural gas industry. Section 4.3.1 presents a discussion of the available VOC emission controls for storage vessels. Section 4.3.2 includes a summary of the federal, state and local regulatory approaches that control VOC emissions from crude oil and condensate storage vessels.

4.3.1 Available VOC Emission Control Options

The options generally used to limit the amount of VOC vented are to (1) route emissions from the storage vessel to any enclosed portion of a process where emissions are recycled, recovered, or reused in the process "route to a process") (e.g., by installing a vapor recovery unit (VRU) that recovers vapors from the storage vessel); and (2) route emissions from the storage vessel to a combustor. One of the clear advantages the first option has over the second option is that it results in a cost savings associated with the recycled, recovered, and reused natural gas, rather than the loss and destruction of the natural gas by combustion. Combustion and partial combustion of organic pollutants also creates secondary pollutants including nitrogen oxides, carbon monoxide, sulfur oxides, carbon dioxide and smoke/particulates. These emission control methods are described below along with their emission reduction control effectiveness as they apply to storage vessels in the industry and the potential costs associated with their installation and operation.

4.3.1.1 Routing Emissions to a Process via a Vapor Recovery Unit (VRU)

Description

One option for controlling storage vessel emissions is to route vapors from the storage vessels back to the inlet line of a separator, to a sales gas line, or to some other line carrying hydrocarbon fluids. Where a compressor is used to boost the recovered vapors into the line, this is often referred to as a VRU.[14] Typically with a VRU, hydrocarbon vapors are drawn out of the storage vessel under low pressure and are piped to a separator, or suction scrubber, to collect any

[14] American Petroleum Institute. Letter to Bruce Moore, SPPD/OAQPS/EPA from M. Todd, API. *Re: Oil and Natural Gas Sector Consolidated Rulemaking*. Docket ID No.EPA-HQ-OAR-2010-0505.

condensed liquids, which are usually recycled back to the storage vessel. Vapors from the separator flow through a compressor that provides the low-pressure suction for the VRU system where the recovered hydrocarbons can be transported to various places, including a sales line and/or for use on-site.

Types of VRUs include conventional VRUs and venturi ejector vapor recovery units (EVRU™) or vapor jet systems.[15] Decisions on the type of VRU to use are based on the applicability needs (e.g., an EVRU™ is recommended where there is a high pressure gas compressor with excess capacity and a vapor jet VRU is suggested where there is produced water, less than 75 million cubic feet (Mcf)/day gas and discharge pressures below 40 pounds per square inch gauge (psig). The reliability and integrity of the compressor and suction scrubber and integrity of the lines that connect the tank to the compressor will affect the effectiveness of the VRU system to collect and recycle vapors.[16]

A conventional VRU is equipped with a control pilot to shut down the compressor and permit the back flow of vapors into the tank in order to prevent the creation of a vacuum in the top of a tank when liquid is withdrawn and the liquid level drops. Vapors are then either sent to the pipeline for sale or used as on-site fuel. Figure 4.1 presents a diagram of a conventional VRU installed on a single crude oil storage vessel (multiple tank installations are also common).[17]

---

[15] U.S. Environmental Protection Agency. Lessons Learned from Natural Gas STAR Partners. *Installing Vapor Recovery Units.* Natural Gas STAR Program. Source Reduction Training to Interstate Oil and Gas Compact Commission Presentation. February 27, 2009.

[16] U.S. Environmental Protection Agency. Lessons Learned from Natural Gas STAR Partners. *Installing Vapor Recovery Units on Storage Tanks*. Natural Gas STAR Program. October 2006. http://www.epa.gov/gasstar/documents/ll_final_vap.pdf.

[17] U.S. Environmental Protection Agency. Lessons Learned from Natural Gas STAR Partners. *Installing Vapor Recovery Units on Storage Tanks*. Natural Gas Star Program. October 2006. http://www.epa.gov/gasstar/documents/ll_final_vap.pdf.

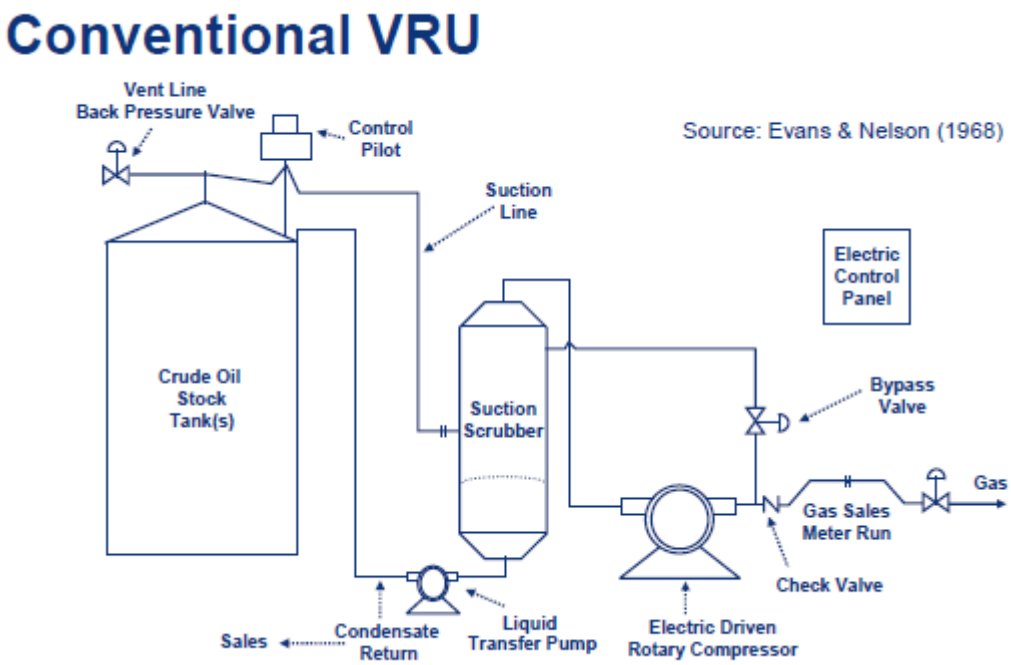

Figure 4-1. Conventional Vapor Recovery System

Control Effectiveness

VRUs have been shown to reduce VOC emissions from storage vessels by over 95 percent and some states require that a VRU used to control VOC emissions from crude oil and condensate storage vessels achieve a 98 percent reduction in VOC emissions.[18,19] VRUs do not generally operate 100 percent of the time due to maintenance and repair down time. For purposes of our analysis, we use 95 percent as the level of control that can consistently be achieved by the use of a VRU. A VRU recovers hydrocarbon vapors that potentially can be used as supplemental burner fuel, or the vapors can be condensed and collected as condensate that can be sold. If natural gas is recovered, it can be sold as well, as long as a gathering line is available to convey the recovered salable gas product to market or to further processing. A VRU cannot be used in all instances. Conditions that affect the feasibility of the use of a VRU include: the availability of electrical service sufficient to power the compressor; fluctuations in vapor loading caused by surges in throughput and flash emissions from the storage vessel; potential for drawing air into

[18] U.S. Environmental Protection Agency. Lessons Learned from Natural Gas STAR Partners. *Installing Vapor Recovery Units on Storage Tanks.* Natural Gas Star Program. October 2006. http://www.epa.gov/gasstar/documents/ll_final_vap.pdf.

[19] Supplement to the Wyoming Air Quality Standards and Regulations (WAQSR). Oil and Natural Gas Production Facilities. *Chapter 6, Section 2 Permitting Guidance*. Revised March 2010.

condensate storage vessels causing an explosion hazard; and lack of appropriate destination or use for the vapor recovered.

Cost Impacts

Cost data for a VRU that were used in support of the 2012 NSPS obtained from an initial economic impact analysis prepared for proposed state-only revisions to a Colorado regulation are presented here.[20] We assumed cost information contained in the Colorado EIA to be given in 2012 dollars. According to the Colorado economic impact analysis, the purchased equipment cost of a VRU was estimated to be $90,000. Total capital investment, including freight and design and installation was estimated to be $102,802. In addition, we included an estimated storage vessel retrofit cost of $68,736 assuming that the cost of retrofitting an existing storage vessel was 75 percent of the purchased equipment cost (e.g., VRU capital costs and freight and design cost).[21] These cost data are presented in Table 4-3. We estimated total annual costs using 2012 dollars to be $28,230 per year without recovered natural gas savings. The uncontrolled emissions from a storage vessel are largely dependent on the bbl/year throughput (see Table 4-2), which greatly influences both the controlled emissions and the cost of control per ton of VOC reduced. Costs may vary due to VRU design capacity, system configuration and individual site needs and recovery opportunities.

In order to assess the cost of control of a VRU for storage vessels that emit differing emissions, we evaluated the costs of routing VOC emissions from an existing storage vessel to a VRU for a storage vessel that emits 2 tpy, 4 tpy, 6 tpy, 8 tpy, 10 tpy, 12 tpy and 25 tpy to determine the level that would be cost-effective to control at a 95 percent control level. We estimated the cost of control without savings by dividing the total annual costs without savings by the tpy reduced. The cost of control with savings is calculated by assuming a 95 percent reduction of VOC emissions by the VRU and converting the reduced VOC emissions to natural gas savings. Table 4-4 presents the estimated natural gas savings and the VOC cost per ton with and without savings.

---

[20] Initial Economic Impact Analysis for Proposed Revisions to the Colorado Air Quality Control Commission Regulation Number 7, *Emissions of Volatile Organic Compounds*. November 15, 2013.

[21] U.S. Environmental Protection Agency. Lessons Learned from Natural Gas STAR Partners. *Installing Vapor Recovery Units on Storage Tanks.* Natural Gas Star Program. October 2006. http://www.epa.gov/gasstar/documents/ll_final_vap.pdf.

Table 4-3. Total Capital Investment and Total Annual Costs of a Vapor Recovery Unit System

Cost Item[a]	Cost ($2012)
Capital Costs Items	
VRU[a]	$90,000
Freight and Design[a]	$1,648
VRU Installation[a]	$11,154
Storage Vessel Retrofit[b]	$68,736
Total Capital Investment	$171,538
Annual Costs Items	
Maintenance	$9,396
Capital Recovery (7 percent interest, 15 year equipment life) ($/yr)	$18,834
Total Annual Costs w/o Savings ($/yr)	***$28,230***

a. Cost data from Initial Economic Impact Analysis (EIA) for proposed revisions to Colorado Air Quality Control Commission Regulation Number 7, Submitted with Request for Hearing Documents on November 15, 2013.
b. Assumes the storage vessel retrofit cost is 75 percent of the purchased equipment price (assumed to include vent system and piping to route emissions to the control device). Retrofit assumption from Exhibit 6 of the EPA Natural Gas Star Lessons Learned, Installing Vapor Recovery Units on Storage Tanks, October 2006.

Table 4-4. Costs of Routing Emissions from an Existing Storage Vessel to a VRU ($/ton of VOC Reduced)

Storage Vessel Emissions (tpy)	Cost per Ton of VOC Reduced ($2012)		
	Without Savings	Natural Gas Savings (Mscf/yr)[a]	With Savings[b]
2	$14,858	$59	$14,734
4	$7,429	118	$7,305
6	$4,953	177	$4,828
8	$3,714	236	$3,590
10	$2,972	295	$2,847
12	$2,476	353	$2,352
25	$1,189	736	$1,065

a. The natural gas savings was calculated by assuming 95 percent VOC recovery and 31 Mscf/yr natural gas savings per ton of VOC recovered.
b. Assumes a natural gas price of $4.00 per Mcf.

Additionally, if a VRU is used to control VOC emissions from multiple storage vessels, the VOC emissions cost of control would be reduced because the cost for the additional storage

vessel(s) would only include the storage vessel retrofit costs, and the overall VOC emission reductions would increase.

4.3.1.2 Routing Emissions to a Combustion Device

Description and Control Effectiveness

Combustors (e.g., enclosed combustion devices, thermal oxidizers and flares that use a high-temperature oxidation process) are also used to control emissions from storage vessels. Combustors are used to control VOC in many industrial settings, since the combustor can normally handle fluctuations in concentration, flow rate, heating value and inert species content.[22] For this analysis, we assumed that the types of combustors installed in the oil and natural gas industry can achieve at least a 95 percent control efficiency on a continuing basis.[23]

A typical combustor used to control emissions from storage vessels in the oil and natural gas industry is an enclosed combustion system. The basic components of an enclosed combustion system include (1) piping for collecting emission source gases, (2) a single- or multiple-burner unit, (3) a stack enclosure, (4) an ignitor to ignite the mixture of emission source gas and air, and (5) combustor fuel/piping (as necessary). Figure 4-2 presents a schematic of a typical dual-burner enclosed combustion system.

Thermal oxidizers, also referred to as direct flame incinerators, thermal incinerators, or afterburners could also be used to control VOC emissions. Similar to a basic enclosed combustion device, a thermal oxidizer uses burner fuel to maintain a high temperature (typically 800-850°C) within a combustion chamber. The VOC laden emission source gas is injected into the combustion chamber where it is oxidized (burned), and then the combustion products are exhausted to the atmosphere. Figure 4-3 provides a basic schematic of a thermal oxidizer.[24]

---

[22] U.S. Environmental Protection Agency. AP 42, Fifth Edition, Volume I, *Chapter 13.5 Industrial Flares*. Office of Air Quality Planning & Standards. 1991.
[23] U.S. Environmental Protection Agency. *Air Pollution Control Technology Fact Sheet: FLARE*. Clean Air Technology Center.
[24] U.S. Environmental Protection Agency. Technology Transfer Network. Clearinghouse for Inventories and Emission Factors. *Thermal Oxidizer*. Website: cfpub.epa.gov/oarweb/mkb/contechnique.cfm?ControllD=17.

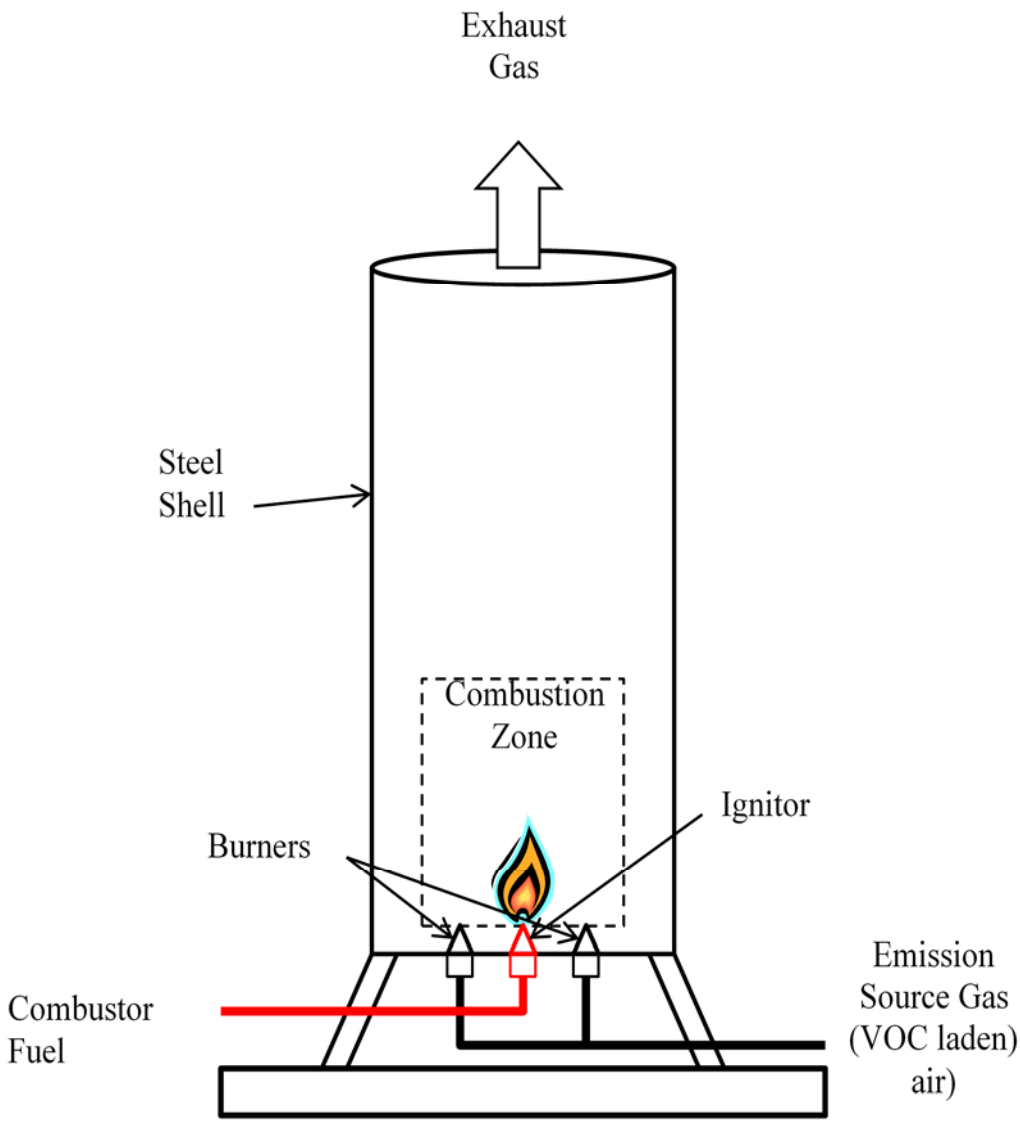

Figure 4-2. Schematic of a Typical Enclosed Combustion System

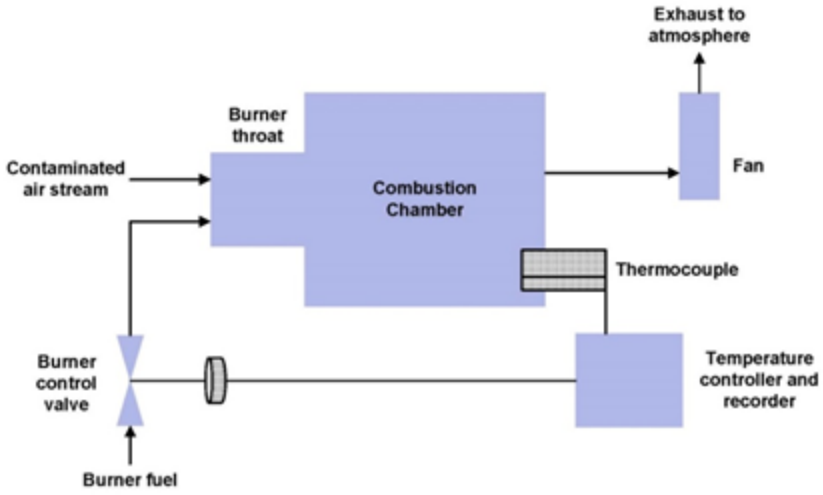

Figure 4-3. Basic Schematic of a Thermal Oxidizer

Cost Impacts

For combustors, we also obtained cost data from the initial EIA prepared for state-only revisions to the Colorado regulation.[25] In addition to these cost data, we added a line-item for operating labor, a surveillance system, and data management. This is consistent with the guidelines outlined in the EPA's Office of Air Quality Planning and Standards (OAQPS) Control Cost Manual (OCCM) for combustion devices and the EIA prepared for the 2012 NSPS.[26] However, OCCM guidelines specify that 630 operating labor hours per year for a combustion device, which we believe is unreasonable because many of these sites are unmanned and would most likely be operated remotely. Therefore, we assumed that the operating labor would be more similar to that estimated for a condenser in the OCCM, 130 hours per year. We estimated a total capital investment of $100,986 and a total annual costs of $22,228 per year. We included an additional cost of $68,736 (as discussed previously for VRUs) to estimate the cost of retrofitting an existing storage vessel to accommodate the use of a combustion device. Table 4-5 presents these cost data.

[25] Initial Economic Impact Analysis for Proposed Revisions to the Colorado Air Quality Control Commission Regulation Number 7, *Emissions of Volatile Organic Compounds*. November 15, 2013.
[26] U.S. Environmental Protection Agency. *OAQPS Control Cost Manual: Sixth Edition* (EPA 452/B-02-001). Research Triangle Park, NC.

Table 4-5. Total Capital Investment and Total Annual Costs of a Combustor[27]

Cost Item[a]	Cost ($2012)
Capital Costs Items	
Combustor[a]	$18,169
Freight and Design[a]	$1,648
Auto Ignitor[a]	$1,648
Surveillance System[b,c,d]	$3,805
Combustor Installation[a]	$6,980
Storage Vessel Retrofit[e]	$68,736
Total Capital Investment	$100,986
Annual Costs Items	
Operating Labor[f]	$5,155
Maintenance[f]	$4,160
Pilot Fuel[a]	$768
Data Management[c]	$1,057
Capital Recovery (7 percent interest, 15 year equipment life) ($/yr)	$11,088
Total Annual Costs ($/yr)	$22,228

[a.] Cost data from Initial Economic Impact Analysis for proposed revisions to Colorado Air Quality Control Commission Regulation Number 7, Submitted with Request for Hearing Documents on November 15, 2013.
[b.] Surveillance system identifies when pilot is not lit and attempts to relight it, documents the duration of time when the pilot is not lit, and notifies and operator that repairs are necessary.
[c.] U.S. Environmental Protection Agency. *Oil and Natural Gas Sector: Standards of Performance for Crude Oil and Natural Gas Production, Transmission, and Distribution - Background Supplemental Technical Support Document for the Final New Source Performance Standards*. April 2012. EPA Docket ID No.EPA-HQ-OAR-2010-0505-4550.
[d.] Cost obtained from 2012 NSPS TSD and escalated using the change in GDP: Implicit Price Deflator from 2008 to 2012 (%)(which was 5.69 percent). Source: FRED GDP: Implicit Price Deflator from Jan 2008 to Jan 2012 (http://research.stlouisfed.org/fred2/series/GDPDEF/#)
[e.] Retrofit cost obtained from Storage Vessel Retrofit in Table 4-3 (assumed to include vent system and piping to route emissions to the control device).
[f.] Operating labor consists of labor resources for technical operation of device (130 hr/yr) and supervisory labor (15 percent of technical labor hours). Maintenance labor hours are assumed to be the same as operating labor (130 hr/yr). Labor rates are $32.00/hr (for technical and maintenance labor) and $51.03 (supervisory labor) and were obtained from the U.S. Department of Labor, Bureau of Labor Statistics, Employer Costs for Employee Compensation, December 2012.

As noted previously, storage vessels vary in size and throughputs and the uncontrolled emissions from a storage vessel are largely dependent on the bbl/year throughput (see Table 4-2),

[27] U.S. Environmental Protection Agency. *Oil and Natural Gas Sector: Standards of Performance for Crude Oil and Natural Gas Production, Transmission, and Distribution - Background Supplemental Technical Support Document for the Final New Source Performance Standards*. April 2012. EPA Docket Number EPA-HQ-OAR-2010-0505-4550.

which greatly influences both the controlled emissions and cost of control. In order to assess the cost of control of combustion for storage vessels that emit differing emissions, we evaluated the costs of routing VOC emissions from an existing storage vessel to a combustion device for a storage vessel that emits 2 tpy, 4 tpy, 6 tpy, 8 tpy, 10 tpy, 12 tpy and 25 tpy to determine the level that would be cost-effective to control at a 95 percent control level. We estimated the cost of control without savings by dividing the total annual costs without savings by the tpy reduced. Table 4-6 presents these costs. The VOC emissions cost of control per ton of VOC reduced would be less if a combustion device is used to control VOC emissions from multiple storage vessels because the cost for the additional storage vessel(s) would only include storage vessel retrofit costs, and the overall VOC emission reductions would increase.

Table 4-6. Costs of Routing Emissions from an Existing Storage Vessel to a Combustion Device ($/ton of VOC Reduced)

Storage Vessel Emissions (tpy)	Cost per Ton of VOC Reduced ($2012; Without Savings)
2	$11,114
4	$5,849
6	$3,900
8	$2,925
10	$2,340
12	$1,950
25	$936

4.3.2 Existing Federal, State and Local Regulations

4.3.2.1 Federal Regulations that Specifically Require Control of VOC Emissions

Under the 2012 NSPS and 2013 NSPS Reconsideration, new or modified storage vessels with potential to emit VOC emissions of 6 tpy or more must reduce VOC emissions by at least 95 percent, or demonstrate emissions from a vessel have dropped to less than four tpy of VOC without emission controls for 12 consecutive months.

4.3.2.2 State and Local Regulations that Specifically Require Control of VOC Emissions[28]

States may have permitting restrictions on VOC emissions that may apply to an emissions source as a result of an operating, new source review (NSR) nonattainment, or prevention of significant deterioration (PSD) permit (e.g., on a case-by-case basis) based on air quality maintenance or improvement goals of an area. Permits specify what construction is allowed, what emission limits must be met, and how the source must be operated. To ensure that sources follow the permit requirements, permits also contain monitoring, recordkeeping, and reporting requirements.

The environmental regulations in nine of the top oil and natural gas producing states (sometimes with varying local ozone nonattainment area/concentrated area development requirements) (see Table 4-7) require the control of VOC emissions from storage vessels in the oil and natural gas industry. These states include California, Colorado, Kansas, Louisiana, Montana, North Dakota, Oklahoma, Texas and Wyoming. All except Wyoming require 95 percent emission control with the application of a VRU or combustion (Wyoming requires 98 percent control of emissions using a VRU or combustion).

Existing state regulations that apply to storage vessels in the oil and natural gas industry apply to all storage vessels in a tank battery, or include an applicability threshold based on (1) capacity, (2) the vapor pressure of liquids contained in a storage vessel of a specified capacity and (3) the PTE of an individual storage vessel. Table 4-7 presents a brief summary of the storage vessel emission control applicability cutoffs in regulations from these nine states. Four states (Colorado, Montana, Texas and Wyoming) have applicability thresholds in terms of VOC emissions. The remaining five states have storage vessel regulations that are in terms of tank characteristics, such as vapor pressure, tank size or tank contents. Equivalency of applicability thresholds based on tank and stored liquid characteristics and applicability thresholds based on VOC emissions cannot be determined. We analyzed the varying state VOC emission thresholds (based on a range of two tpy to 25

[28] Brown, Heather, EC/R Incorporated. Memorandum prepared for Bruce Moore, EPA/OAQPS/SPPD/FIG. *Revised Analysis to Determine the Number of Storage Vessels Projected to be Subject to New Source Performance Standards for the Oil and Natural Gas Sector.*

tpy) as part of our cost of control analysis for VRUs and combustion devices in section 4.3.1 of this chapter.

Table 4-7. Summary of Storage Vessel Regulations from Nine States

State/Local Authority	Applicability Threshold
Texas	Applies to storage vessels with VOC emissions greater than 25 tpy.
California Bay Area AQMD	Applies to storage vessels with capacity greater than 264 gallons.
California Feather River AQMD	Applies to storage vessels with capacity greater than 39,630 gallons.
California Monterey Bay Unified APCD	Applies to storage vessels with capacity greater than 39,630 gallons.
California Sacramento Metropolitan AQMD	Applies to storage vessels with capacity greater than 40,000 gallons.
California San Joaquin Valley Unified APCD	Applies to storage vessels with capacity greater than 1,100 gallons.
California Santa Barbara County APCD	Applies to all storage vessels in tank battery (including wash tanks, produced water tanks, and wastewater tanks).
California South Coast AQMD	Applies to storage vessels with capacity greater than 39,630 gallons with a true vapor pressure of 0.5 psia or greater and storage vessels with a capacity greater than 19,815 gallons with a true vapor pressure of 1.5 psia or greater.
California Ventura County APCD	Applies to all storage vessels. Requirements depend on gallon capacity and true vapor pressure of material contained in vessel.
California Yolo-Solano AQMD	Applies to storage vessels with capacity greater than 40,000 gallons.
North Dakota	NDAC 33-15-07: submerged filling requirements to control VOC for tanks >1,000 gallons.
Federal Implementation Plan (FIP): Fort Berthold Indian Reservation	Applies to all storage vessels (except those covered by NSPS subpart OOOO). There is no minimum threshold under the final FIP.
Louisiana	Applies to storage vessels more than 250 gallons up to 40,000 gallons with a maximum true vapor pressure of 1.5 psia or greater.

State/Local Authority	Applicability Threshold
Oklahoma	Applies to storage vessels with capacity greater than 40,000 gallons (in ozone nonattainment areas).
Wyoming – Statewide	Applies to storage vessels with greater than or equal to 10 tpy VOC within 60 days of startup/modification.
Wyoming – Concentrated Development Area	Applies to storage vessels with greater than or equal to 8 tpy VOC, within 60 days of startup/modification.
Kansas	Permanent fixed roof storage tanks >40,000 gallons and external floating roof storage tanks.
Colorado	Condensate tanks with uncontrolled VOC emissions > 20 tpy (2 tpy located at gas processing plants in ozone non-attainment areas).
Montana	Applies to oil or condensate storage tanks with a PTE greater than 15 tpy VOC.

4.4 Recommended RACT Level of Control

As discussed in section 4.3.2 of this chapter, existing federal and state and local regulations already require the reduction of VOC emissions from storage vessels in the oil and natural gas industry at or greater than 95 percent. While technologies such as a VRU and combustor (discussed in section 4.3.1 of this chapter) may achieve a 98 percent reduction of VOC emissions (and states such as Wyoming require 98 percent VOC emissions reduction level of control for storage vessels), data we reviewed in support of the NSPS indicated that 98 percent control is not technically achievable for all storage vessels.[29] We believe that a 95 percent reduction of VOC emissions from storage vessels in the oil and natural gas industry is a reasonable recommended RACT level of control. This belief is supported by the wide use of this level of control in federal and state regulations that apply to storage vessels and because a 95 percent level of control has been demonstrated to be technically achievable for storage vessels in the oil and natural gas industry.

Although sources have a choice on how they meet the recommended RACT level of control, the technologies that will likely be used to meet the recommended RACT level of

[29] U.S. Environmental Protection Agency. *Oil and Natural Gas Sector: New Source Performance Standards and National Emission Standards for Hazardous Air Pollutants Reviews. 40 CFR Parts 60 and 63. Response to Comments on Proposed Rule*. August 23, 2011 (76 FR 52738). p. 128.

control for oil and natural gas industry storage vessels are routing emissions to the process via a VRU or routing emissions to a combustion device.

As discussed in section 4.2.2 of this chapter, the VOC emissions from storage vessels vary significantly, depending on the rate of liquid entering and passing through the vessel (i.e., its throughput), the pressure of the liquid as it enters the atmospheric pressure storage vessel, the liquid's volatility and temperature of the liquid. Some storage vessels have negligible emissions, such as those with very little throughput and/or handling heavy liquids entering at atmospheric pressure where it would not be cost effective to require emission control requirements. Existing state regulations that apply to storage vessels in the oil and natural gas industry apply to all storage vessels in a tank battery, or include an applicability threshold based on (1) capacity, (2) the vapor pressure of liquids contained in a storage vessel of a specified capacity and (3) the PTE of an individual storage vessel. Based on information gathered under the 2012 NSPS,[30] throughput and capacity of a storage vessel is not always the best indicator of a storage vessels' emissions, and we believe that the PTE of an individual storage vessel is preferable to use as an applicability threshold for storage vessels.

Based on our analyses conducted in support of the 2012 NSPS, 6 tpy was determined to be a cost-effective applicability threshold for requiring 95 percent control of VOC emissions from new storage vessels (estimated to cost, on average, approximately $3,400 per ton of VOC reduced). Our analyses conducted for our RACT recommendation also found 6 tpy to be a cost-effective applicability threshold for requiring 95 percent control of VOC emissions from existing storage vessels (estimated to cost, on average, between $3,900 and $4,800 per ton of VOC reduced). Based on these analyses, we recommend that the 95 percent VOC emission control of storage vessels only apply to storage vessels that emit greater than or equal to 6 tpy of VOC emissions. The VOC cost of control per ton of VOC reduced would be less if a combustion device or VRU is used to control VOC emissions from multiple storage vessels because the cost for the additional storage vessels would only include storage vessel retrofit costs, and the overall VOC emission reductions would increase.

In summary, we recommend the following as RACT for storage vessels in the oil and natural gas industry:

[30] 77 FR 49490, August 16, 2012

(1) RACT for Condensate Storage Vessels: Reduce emissions by 95 percent from condensate storage vessels with a PTE ≥ 6 tpy of VOC.

(2) RACT for Crude Oil Storage Vessels: Reduce emissions by 95 percent from crude oil storage vessels with a PTE ≥ 6 tpy of VOC.

4.5 Factors to Consider in Developing Storage Vessel Compliance Procedures

4.5.1 Compliance Recommendations When Using a Control Device

Improper design or operation of the storage vessel and its control system can result in occurrences where peak flow overwhelms the storage vessel and its capture systems, resulting in emissions that do not reach the control device, effectively reducing the control efficiency. We believe that it is essential that operators employ properly designed, sized and operated storage vessels to achieve effective emission control. We believe that such efforts on the part of owners and operators can result in more effective control of VOC emissions from storage vessels.

In order to ensure that VOC emissions are reduced by at least 95 percent (the recommended RACT level of control) from a storage vessel when using a control device or other control measure (such as routing to a process), the storage vessel should be equipped with a cover that is connected through a closed vent system that routes emissions to the control device (or process) that meets the RACT level of control. We recommend cover, closed vent system and control device design and compliance measures to ensure that control measures meet the RACT level of control. Recommended cover and closed vent system design and operation measures are specified in sections 4.5.1.1 and 4.5.1.2. Recommended control device operation and monitoring provisions for specified controls to ensure compliance are presented in sections 4.5.1.3 and 4.5.1.4. The appendix to this document presents example model rule language that incorporates compliance elements recommended in this section that states may choose to use in whole or in part.

4.5.1.1 Recommendations for Cover Design

The cover and all openings on the cover (e.g., access hatches, sampling ports, pressure relief valves and gauge wells) should form a continuous impermeable barrier over the entire surface area of the liquid in the storage vessel or wet seal fluid degassing system. Each cover

opening should be secured in a closed, sealed position (gasket lid or cap) whenever material is in the unit except when it is necessary to open as follows:

(1) To add material to or remove material from the unit (including openings necessary to equalize or balance the internal pressure of the unit following changes in the level of material in the unit);
(2) To inspect or sample the material in the unit;
(3) To inspect, maintain, repair or replace equipment located in the unit; or
(4) To vent liquids, gases or fumes from the unit through a closed-vent system designed and operated in accordance specified control device requirements (see section 4.5.1.2) or to a process.

We recommend that you require the storage vessel thief hatch be equipped, maintained and operated with a weighted mechanism or equivalent, to ensure that the lid remains properly seated. We also recommend that you require the gasket material for the hatch be selected based on composition of the fluid in the storage vessel and weather conditions.

We recommend requiring olfactory, visual and auditory inspections of covers for defects that could result in air emissions on a monthly basis. We recommend requiring that any detected defects be repaired as soon as technically feasible to minimize emissions (and prior to the end of the next shutdown).

4.5.1.2 Recommendations for Closed Vent Systems

The closed vent system should be designed and operated with no detectable emissions (which can be monitored by monthly olfactory, visual and auditory inspections) and should be in operation at least 95 percent of the year. We recommend requiring that any detected defects be repaired as soon as technically feasible to minimize emissions (and prior to the end of the next shutdown).

With the exception of low leg drains, high point bleeds, analyzer vent, open-ended valves and safety devices, if the closed vent system contains one or more bypass devices that could be used to divert all or a portion of the gases, vapors, or fumes from entering the control device or to a process, we recommend requiring owners and operators either:

(1) Install, calibrate, maintain and operate a flow indicator at the inlet to the bypass device that could divert the stream away from the control device or process to the atmosphere

that sounds an audible and visual alarm, or, initiates notification via remote alarm to the nearest field office, when the bypass device is open such that the stream is being, or could be, diverted away from the control device or process to the atmosphere; or

(2) Secure the bypass device valve installed at the inlet to the bypass device in the non-diverting position using a car-seal or a lock-and-key type configuration. We recommend requiring bypass devices to be equipped with flow indicators that sound an alarm when the stream is diverted away from the control device or process to the atmosphere and that records be maintained of times when the alarm sounds.

4.5.1.3 Recommendations When "Routing to a Process" to a VRU

Routing to a process would entail routing emissions via a closed vent system to any enclosed portion of a process unit where the emissions are predominantly recycled and/or consumed in the same manner as a material that fulfills the same function in the process and/or transformed by chemical reaction into materials that are not regulated materials and/or incorporated into a product and/or recovered. Vapor recovery units and flow lines that "route emissions to a process" would be considered part of the process and would not be considered control devices that are subject to standards, but the cover and closed vent design, operation and monitoring requirements specified in sections 4.5.1.1 and 4.5.1.2 would apply.

4.5.1.4 Recommendations for Control Device Operation and Monitoring

If a control device is used to comply with the recommended RACT level of control, the device should be required to operate at all times when gases, vapors, and fumes are vented from the storage vessel affected facility through the closed vent system to the control device. The following paragraphs present select emission control options and suggested operation and monitoring requirements, as appropriate to ensure compliance with the RACT level of control.

<u>Enclosed Combustion Devices</u>

If an enclosed combustion device (e.g., thermal vapor incinerator, catalytic vapor incinerator, boiler or process heater) is used to meet the suggested RACT level of control, it should be designed to reduce the mass content of VOC emissions by 95 percent or greater; and (1) maintained in a leak free condition, (2) installed and operated with a continuous burning pilot flame and (3) operated with no visible emissions.

The visible emissions test (using section 11 of EPA Method 22, 40 CFR part 60, appendix A-7), inspection, repair and maintenance activities for each unit are recommended to be required and recorded in a maintenance and repair log that can be made available for inspection. Following return to operation from maintenance or repair activity, each device should be required to pass a Method 22 visual observation test as described in this paragraph.

We recommend requiring that sources meeting the RACT level of control by routing emissions to a combustion device conduct performance tests and/or design analyses that demonstrate that the combustion device being used meets the required RACT level of control (*see* section F of the appendix to this document for performance testing procedures for control devices that we recommend be used to demonstrate performance requirements).

Vapor Recovery Devices

Vapor recovery devices (e.g., refrigerated condenser or carbon adsorption system) or other non-destructive control device must be designed and operated to reduce the mass content of VOC in the gases vented to the device by 95 percent by weight or greater. If a condenser is used, the condenser should be required to meet site-specific performance requirements (similar to those specified in 40 CFR 60.5417(f)(2)) and, if a carbon adsorption system is used, owners or operators should be required to establish a carbon replacement schedule for its carbon adsorption system that ensures continued compliance with the recommended RACT level of control. Condensers should be required to be equipped with a temperature monitoring device that continually records temperatures to ensure optimum operation and emission control is maintained (temperature sensor should be located in the exhaust vent from the condenser and should have a minimum accuracy of $\pm$ one percent of the temperature being monitored in $^{\circ}$C, or $\pm$ 2.8°C, whichever value is greater). The carbon replacement schedule interval should be established using a performance test (e.g., as specified in 40 CFR 60.5413(b)) so that it is based on the total carbon working capacity of the control device and source operating schedule.

5.0 COMPRESSORS

Compressors are mechanical devices that increase the pressure of natural gas and allow the natural gas to be transported from the production site, through the supply chain, and to the consumer. The types of compressors that are used by the oil and natural gas industry as prime movers are reciprocating and centrifugal compressors. This chapter discusses the sources of VOC emissions from these compressors. This chapter also provides control techniques used to reduce VOC emissions from these compressors, along with costs and emission reductions. Finally, this chapter provides a discussion of our recommended RACT and the associated VOC emission reductions and costs for both reciprocating and centrifugal compressors.

5.1 Applicability

For the purposes of this guideline, the emissions and emission reductions discussed herein would apply to centrifugal and reciprocating compressors in the oil and natural gas industry located between the wellhead and point of custody transfer to the natural gas transmission and storage segment. As noted in section 3.2 of this document, we did not evaluate RACT for compressors located at a well site, or an adjacent well site and servicing more than one well site.

5.2 Process Description and Emission Sources

5.2.1 Process Description

5.2.1.1 Reciprocating Compressors

In a reciprocating compressor, natural gas enters the suction manifold, and then flows into a compression cylinder where it is compressed by a piston driven in a reciprocating motion by the crankshaft powered by an internal combustion engine. Emissions occur when natural gas leaks around the piston rod when pressurized natural gas is in the cylinder. The compressor rod packing system consists of a series of flexible rings that create a seal around the piston rod to prevent gas from escaping between the rod and the inboard cylinder head. However, over time, during operation of the compressor, the rings become worn and the packaging system needs to be

replaced to prevent excessive leaking from the compression cylinder. See Figure 5-1 for a depiction of a typical rod compressor packing system configuration.[31]

Figure 5-1. Typical Reciprocating Compressor Rod Packing System Diagram

5.2.1.2 Centrifugal Compressors

Centrifugal compressors use a rotating disk or impeller to increase the velocity of the natural gas where it is directed to a divergent duct section that converts the velocity energy to pressure energy. These compressors are primarily used for continuous, stationary transport of natural gas in the processing and transmission systems. Many centrifugal compressors use wet (meaning oil) seals around the rotating shaft to prevent natural gas from escaping where the compressor shaft exits the compressor casing. The wet seals use oil which is circulated at high pressure to form a barrier against compressed natural gas leakage. The circulated oil entrains and

[31] U.S. Environmental Protection Agency. Lessons Learned from Natural Gas STAR Partners. *Reducing Methane Emissions from Compressor Rod Packing Systems*. Natural Gas STAR Program. 2006.

adsorbs some compressed natural gas that may be released to the atmosphere during the seal oil recirculation process. Figure 5-2 illustrates the wet seal compressor configuration.[32]

Figure 5-2. Typical Centrifugal Compressor Wet Seal

Alternatively, dry seals can be used in place of wet seals in centrifugal compressors. Dry seals prevent leakage by using the opposing force created by hydrodynamic grooves and springs (see Figure 5-3). The hydrodynamic grooves are etched into the surface of the rotating ring affixed to the compressor shaft. When the compressor is not rotating, the stationary ring in the seal housing is pressed against the rotating ring by springs. When the compressor shaft rotates at high speed, compressed natural gas has only one pathway to leak down the shaft, and that is between the rotating and stationary rings. This natural gas is pumped between the grooves in the rotating and stationary rings. The opposing force of high-pressure natural gas pumped between the rings and springs trying to push the rings together creates a very thin gap between the rings through which little natural gas can leak. While the compressor is operating, the rings are not in

[32] U.S. Environmental Protection Agency. Lessons Learned from Natural Gas STAR Partners. *Replacing Wet Seals with Dry Seals in Centrifugal Compressors*. Natural Gas STAR Program. October 2006. http://epa.gov/gasstar/documents/ll_wetseals.pdf

contact with each other, and therefore, do not wear or need lubrication. O-rings seal the stationary rings in the seal case.[33]

Figure 5-3. Typical Centrifugal Compressor Tandem Dry Seal

Natural gas emissions from wet seal centrifugal compressors have been found to be higher than dry seal compressors primarily due to the off-gassing of the entrained natural gas from the oil. This natural gas is not suitable for sale and is either released to the atmosphere, flared, or routed back to a process. In addition to lower natural gas leakage (and therefore lower emissions), dry seals have been found to have lower operation and maintenance costs than wet seal compressors because they are a mechanically simpler design, require less power to operate, and are more reliable. For the same reasons we explained in the 2012 NSPS and the 2015 NSPS proposal, we are not recommending RACT for dry seal compressors and instead include the use of dry seal in place of a wet seal system as an available control option for reducing VOC emissions from wet seal centrifugal compressors (discussed in section 5.3.1.2 of this chapter).

[33] U.S. Environmental Protection Agency. Lessons Learned from Natural Gas STAR Partners. *Replacing Wet Seals with Dry Seals in Centrifugal Compressors*. Natural Gas STAR Program. October 2006. http://epa.gov/gasstar/documents/ll_wetseals.pdf

During the rulemakings for the 2012 NSPS and 2015 NSPS proposal, we found that the dry seal system and the option of routing to a process both had at least 95 percent control efficiency.

5.2.2 Emissions Data

5.2.2.1 Summary of Major Studies and Emissions

Several studies have been conducted that provide leak estimates from reciprocating and centrifugal compressors. Table 5-1 lists these studies, along with the type of information contained in the study. In addition to these sources, we evaluated the peer reviewer and public comments received on the EPA's white paper, "Oil and Natural Gas Sector Compressors."[34]

Table 5-1. Major Studies Reviewed for Emissions Data[35]

Report Name	Affiliation	Year of Report	Activity Factors	Emissions Data	Control Options
Inventory of Greenhouse Gas Emissions and Sinks: 1990-2012[a]	EPA	2014	Nationwide	X	
Greenhouse Gas Reporting Program (Annual Reporting; Current Data Available for 2011-2013)[b]	EPA	2014	Facility-Level	X	X
Methane Emissions from the Natural Gas Industry[c]	EPA/Gas Research Institute (GRI)	1996	Nationwide	X	
Natural Gas STAR Program[d,e]	EPA	1993-2010	Nationwide	X	X
Natural Gas Industry Methane Emission Factor Improvement Study[f]	URS Corporation, UT Austin, and EPA	2011	None	Emission factors only	
Characterizing Pivotal Sources of Methane Emissions from Natural Gas Production: Summary and Analysis of API and ANGA Survey Responses[g]	API/ANGA	2012	Regional	X[h]	

[34] U.S. Environmental Protection Agency. *Oil and Natural Gas Sector Compressors. Report for Oil and Natural Gas Sector Compressors Review Panel*. Office of Air Quality Planning and Standards (OAQPS). April 2014. Available at http://www.epa.gov/airquality/oilandgas/2014papers/20140415compressors.pdf

[35] U.S. Environmental Protection Agency. *Oil and Natural Gas Sector: Standards of Performance for Crude Oil and Natural Gas Production, Transmission, and Distribution - Background Supplemental Technical Support Document for the Final New Source Performance Standards*. April 2012. EPA Docket Number EPA-HQ-OAR-2010-0505-4550.

Report Name	Affiliation	Year of Report	Activity Factors	Emissions Data	Control Options
Economic Analysis of Methane Emissions Reduction Opportunities in the U.S. Onshore Oil and Natural Gas Industries[i]	ICF International (Prepared for the Environmental Defense Fund (EDF)	2014	Regional	X	X

[a.] U.S Environmental Protection Agency. *Greenhouse Gas Inventory: Emission and Sinks 1990-2012*. Washington, DC.
[b.] U.S. Environmental Protection Agency. *Greenhouse Gas Emissions Reporting From the Petroleum and Natural Gas Industry: Climate Change Division*. Washington, DC. November 2014.
[c.] U.S. Environmental Protection Agency/GRI. National Risk Management Research Laboratory. Research and Development. *Methane Emissions from the Natural Gas Industry, Volume 8: Equipment Leaks*. Prepared for the U.S. Department of Energy, Energy Information Administration. EPA-600/R-96-080h. June 1996.
[d.] U.S. Environmental Protection Agency. *Lessons Learned: Reducing Methane Emissions from Compressor Rod Packing Systems*. Natural Gas STAR. Environmental Protection Agency. 2006
[e.] U.S. Environmental Protection Agency. *Lessons Learned: Reducing Methane Emissions from Compressor Rod Packing Systems*. Natural Gas STAR. Environmental Protection Agency. 2006.
[f.] URS Corporation/University of Texas at Austin. 2011. *Natural Gas Industry Methane Emission Factor Improvement Study, Final Report*. December 2011. http://www.utexas.edu/research/ceer/GHG/files/FReports/XA_83376101_Final_Report.pdf.
[g.] American Petroleum Institute (API) and America's Natural Gas Alliance (ANGA). *Characterizing Pivotal Sources of Methane Emissions from Natural Gas Production. Summary and Analysis of API and ANGA Survey Responses*. Final Report. September 21, 2012.
[h.] The API/ANGA study provided information on equipment counts that could augment nationwide emissions calculations. No source emission information was included.
[i.] ICF International. *Economic Analysis of Methane Emissions Reduction Opportunities in the U.S. Onshore Oil and Natural Gas Industries.* Prepared for the Environmental Defense Fund. March 2014.

5.2.2.2 Representative Reciprocating and Centrifugal Compressor Emissions

The centrifugal compressor methane emission factors used for processing are based on emission factor data for wet seals and dry seals from a sampling of wet seal and dry seal centrifugal compressor data in the 2012 GHG Inventory.

For gathering and boosting station reciprocating compressors, the 2011 NSPS TSD emission factors were used because they are considered to be the best representative emission factors at this time. Emission factors in the Clearstone study[36], which are expressed in thousand standard cubic feet per cylinder, were multiplied by the average number of cylinders per gathering and boosting station reciprocating compressor. The volumetric methane emission rate was converted to a mass emission rate using a density of 41.63 pounds of methane per thousand cubic feet. This conversion factor was developed assuming that methane is an ideal gas and using the ideal gas law to calculate the density. A summary of the reciprocating compressor methane emission factors used for this analysis is presented in Table 5-2. Once the mass methane

[36] Clearstone Engineering Ltd. *Cost-Effective Directed Inspection and Maintenance Control Opportunities at Five Gas Processing Plants and Upstream Gathering Compressor Stations and Well Sites*. (Draft): 2006.

emission rate was calculated, ratios were used to estimate VOC emissions using the methane to VOC pollutant ratios developed in the 2011 Gas Composition Memorandum. The specific ratio that was used to convert methane emissions to VOC emissions is 0.278 pounds VOC per pound of methane for the production and processing segments. Table 5-3 presents a summary of the estimated methane and VOC emissions per reciprocating and centrifugal compressor (in tpy) for the production and processing segments.

Table 5-2. Methane Emission Factors for Reciprocating and Centrifugal Compressors[37]

Oil and Gas Industry Segment	Reciprocating Compressors			Centrifugal Compressors	
	Methane Emission Factor (scfh-cylinder)	Average Number of Cylinders	Pressurized Factor (Percent of Hours/Year Compressor Pressurized)	Wet Seal Methane Emission Factor (scfm)	Dry Seals Methane Emission Factor (scfm)
Gathering & Boosting Stations	25.9[a]	3.3	79.1%	N/A[c]	N/A[c]
Processing	57[b]	2.5	89.7%	47.7[d]	6[d]

[a.] Clearstone Engineering Ltd. *Cost-Effective Directed Inspection and Maintenance Control Opportunities at Five Gas Processing Plants and Upstream Gathering Compressor Stations and Well Sites*. 2006.
[b.] U.S. Environmental Protection Agency/GRI. *Methane Emissions from the Natural Gas Industry: Volume 8 – Equipment Leaks*. Table 4-14.
[c.] U.S. Environmental Protection Agency/GRI. *Methane Emissions from the Natural Gas Industry: Volume 11 – Compressor Driver Exhaust*. 1996 Report does not report any centrifugal compressors in the production or gathering/boosting segments, therefore no emission factor data were published for those two segments.
[d.] U.S Environmental Protection Agency. *Methodology for Estimating CH_4 and CO_2 Emissions from Petroleum Systems. Greenhouse Gas Inventory: Emission and Sinks1990-2012*. Washington, DC. April 2014.

[37] U.S. Environmental Protection Agency/GRI. Research and Development, National Risk Management Research Laboratory. *Methane Emissions from the Natural Gas Industry*. Prepared for the U.S. Department of Energy, Energy Information Administration. EPA-600/R-96-080h. June 1996.

Table 5-3. Baseline Methane VOC Emission Estimates for Reciprocating and Centrifugal Compressors[a]

Industry Segment/Compressor Type	Baseline Emission Estimates (tpy)	
	Methane	VOC
Reciprocating Compressors		
Gathering and Boosting Stations	12.3	3.42
Processing	22	6.12
Centrifugal Compressors (Wet seals)		
Processing	210.53	19.1
Centrifugal Compressors (Dry seals)		
Processing	26	2.4

[a.] For centrifugal compressors, it was assumed that 75 percent of the natural gas that is compressed is pipeline quality gas and 25 percent of the natural gas is production quality.

5.3 Available Controls and Regulatory Approaches

5.3.1 Available VOC Emission Control Options

Available controls for reducing VOC emissions from reciprocating and centrifugal compressors are presented in sections 5.3.1.1 and 5.3.1.2 of this chapter.

5.3.1.1 Reciprocating Compressors

Potential control options for reducing emissions from reciprocating compressors include control techniques that limit the leaking of natural gas past the piston rod packing. These options include (1) increasing or specifying the frequency of the replacement of the compressor rod packing, (2) increasing or specifying the frequency of the replacement of the piston rod, (3) specifying the refitting or realignment of the piston rod, and (4) routing of emission to a process through a closed vent system under negative pressure. In addition to these options, there are emerging control techniques where specific analyses have not yet been conducted. For example, there may be potential for reducing VOC emission by updating rod packing components made from newer materials which can help improve the life and performance of the rod packing system (economic rod packing replacement) and capturing gas from the reciprocating compressor and routing it back to the compressor engine to be used as fuel. These emerging VOC emissions control techniques are discussed briefly below, along with our evaluation of the

frequency of compressor rod packing/piston rod replacement and piston rod refitting and realignment control options.

We do not believe that combustion is a technically feasible control option because, as detailed in the 2011 NSPS TSD, routing of emissions to a control device can cause positive back pressure on the packing, which can cause safety issues due to gas backing up in the distance piece area and engine crankcase in some designs. While considering the option of routing of emissions to a process through a closed vent system under negative pressure, we determined that the negative pressure requirement not only ensures that all the emissions are conveyed to the process, it also avoids the issue of inducing back pressure on the rod packing and the resultant safety concerns. Although this option can be used in some circumstances, it cannot be applied in every installation. As a result, these options were not further considered under this guideline.

Frequency of Rod Packing Replacement

For reciprocating compressors, one of the options for reducing VOC emissions is a maintenance task that would increase or specify the frequency of replacement of the rod packing in order to reduce the leakage of natural gas past the piston rod. Over time the packing rings wear and allow more natural gas to escape around the piston rod. Regular replacement of these rings reduces VOC emissions. Therefore, this control technique is considered to be an available VOC emission control technique for reciprocating compressors.

Description

As noted previously, reciprocating compressor rod packing consists of a series of flexible rings that fit around a shaft to create a seal against leakage. As the rings wear, they allow more compressed natural gas to escape, increasing rod packing emissions. Rod packing emissions typically occur around the rings from slight movement of the rings in the cups as the rod moves, but can also occur through the "nose gasket" around the packing case, between the packing cups, and between the rings and shaft. If the fit between the rod packing rings and rod is too loose, more compressed natural gas will escape. Periodically replacing the packing rings ensures the correct fit is maintained between packing rings and the rod. [38]

[38] U.S. Environmental Protection Agency. Lessons Learned from Natural Gas STAR Partners. *Reducing Methane Emissions from Compressor Rod Packing Systems*. Natural Gas STAR Program. 2006.

Control Effectiveness

As discussed above, regular replacement of the reciprocating compressor rod packing can reduce the leaking of natural gas across the piston rod. The potential emission reductions for gathering and boosting stations and the processing segment were calculated by comparing the average rod packing emissions with the average emissions from newly installed and worn-in rod packing.

Based on industry information from the Natural Gas STAR Program, we have determined that the additional cost of shortening the replacement period more frequently than every three years or every 26,000 hours would not be justified based on the additional emission reductions that would be achieved.[39] Therefore, we analyzed emission reductions that would result from replacing worn packing with newly installed packing at a frequency of every three years or every 26,000 hours. For the baseline, we assumed that rod packing is replaced every four years. The analysis uses Equation 1 for estimating gathering and boosting station emission reductions, and Equation 2 for estimating processing segment emission reductions that would result from replacing worn packing with newly installed packing at a frequency of every 3 years or every 26,000 hours.[40]

Equation 1

$$R_{WP}^{G\&B} = \frac{Comp_{Existing}^{G\&B}\left(E_{G\&B} - E_{New}\right) \times C \times O \times 8760}{10^6}$$

Where:

$R_{WP}^{G\&B}$ = Potential methane emission reductions from gathering and boosting station compressors by replacing worn packing with newly installed packing, in million cubic feet per year (MMcf/year);

$Comp_{Existing}^{G\&B}$= Number of existing gathering and boosting station compressors;

[39] U.S. Environmental Protection Agency. *Oil and Natural Gas Sector: New Source Performance Standards and National Emission Standards for Hazardous Air Pollutants Reviews. 40 CFR Parts 60 and 63. Response to Public Comments on Proposed Rule*. August 23, 2011 (76 FR 52738). pg. 102.

[40] U.S. Environmental Protection Agency. *Oil and Natural Gas Sector: Standards of Performance for Crude Oil and Natural Gas Production, Transmission, and Distribution – Background Technical Support Document for Proposed Standards*. July 2011. EPA Document Number EPA-453/R-11-002.

$E_{G\&B}$ = Methane emission factor for gathering and boosting station compressors, in cubic feet per hour per cylinder (25.9 scfh-cylinder);

E_{New} =Average emissions from a newly installed rod packing, assumed to be 11.5 cubic feet per hour per cylinder[41] for this analysis;

C = Average number of cylinders for gathering and boosting station compressors (i.e., 3.3)

O = Percent of time during the calendar year the average gathering and boosting station compressor is in the operating and standby pressurized modes, 79.1 percent;

8760 = Number of hours in a year;

10^6 = Number of cubic feet in a million cubic feet.

Equation 2 $$R_P = \frac{Comp^P_{Existing}\left(E_P - E_{New}\right) \times C \times O \times 8760}{10^6}$$

Where:

R_P= Potential methane emission reductions from processing compressors replacing worn packing to newly installed packing, in million cubic feet per year (MMcf/year);

$Comp^P_{Existing}$= Number of existing processing compressors;

E_P = Methane emission factor for processing compressors, in cubic feet per hour per cylinder, 57 scfh-cylinder;

E_{New} =Average emissions from a newly installed rod packing, assumed to be 11.5 cubic feet per hour per cylinder[42] for this analysis;

C = Average number of cylinders for processing compressors (i.e., 2.5);

O = Percent of time during the calendar year the average processing compressor is in the operating and standby pressurized modes, 89.7 percent;

8760 = Number of hours in a year;

10^6 = Number of cubic feet in a million cubic feet.

[41] U.S. Environmental Protection Agency. Lessons Learned from Natural Gas STAR Partners. *Reducing Methane Emissions from Compressor Rod Packing Systems*. Natural Gas STAR Program. 2006.

[42] U.S. Environmental Protection Agency. Lessons Learned from Natural Gas STAR Partners. *Reducing Methane Emissions from Compressor Rod Packing Systems*. Natural Gas STAR Program. 2006.

Table 5-3 presents a summary of the potential emission reductions for reciprocating compressor rod packing replacement for gathering and boosting station compressors and processing segment compressors based on the percent natural gas reduction calculated from the above equations. The emissions of VOC were estimated using the methane emissions calculated above and the methane-to-VOC- ratio developed for each of the segments in the 2011 Gas Composition Memorandum.

Table 5-4. Estimated Annual Reciprocating Compressor Emission Reductions from Increasing the Frequency of Rod Packing Replacement

Oil and Natural Gas Segment	Individual Compressor Emission Reductions (tons/compressor-year)	
	Methane	VOC
Gathering and Boosting	6.84	1.9
Processing	17.58	4.89

Cost Impacts

Costs for the specified frequency of replacement of reciprocating compressor rod packing documented in the 2011 NSPS TSD were obtained from a Natural Gas STAR Lessons Learned document which estimated the cost to replace the packing rings to be $1,712 per cylinder (converted from 2008 dollars to 2012 dollars). It was assumed that rod packing replacement would occur during planned shutdowns and maintenance, and therefore no additional travel costs would be incurred for implementing the rod packing replacement program. In addition, no costs were included for monitoring because the rod packing replacement is based on the number of hours that the compressor operates or the period of time since the previous replacement. The 2011 NSPS TSD analysis assumed that, at baseline, the replacement of rod packing for reciprocating compressors occurs on average every four years based on industry information from the Natural Gas STAR Program. The cost impacts are based on the replacement frequency of the rod packing every 26,000 hours that the reciprocating compressor operates in the pressurized mode.

The 26,000 hour replacement frequency used for the cost impacts in the 2011 NSPS TSD was determined using a weighted average of the annual percentage that the reciprocating compressors are pressurized. The weighted average percentage was calculated to be 98.9 percent.

This percentage was multiplied by the total number of hours in 3 years to obtain a value of 26,000 hours. Assuming an interest rate of 7 percent, the capital recovery factors (based on replacing the rod packing every 3 years or 26,000 hours) were calculated to be 0.3122 and 0.3490 for gathering and boosting stations and the processing segment, respectively. The capital costs were calculated using the average rod packing cost of $1,712 (converted from $1,620 in 2008 dollars to 2012 dollars) and the average number of cylinders per compressor (assumed to be 3.3 cylinders for gathering and boosting compressors and 2.5 cylinders for processing segment compressors).[43] The annual costs were calculated using the capital costs and the capital recovery factors. Table 5-4 presents a summary of the capital and annual costs for gathering and boosting stations and the processing segment.

There are monetary savings associated with the amount of gas saved with reciprocating compressor rod packing replacement. Monetary savings associated with the amount of gas saved with reciprocating compressor rod packing replacement was estimated using a natural gas price of $4.00 per Mcf.[44] Table 5-5 presents the annual costs with savings and cost of control for reciprocating rod packing replacement for gathering and boosting stations and the processing segment.

Reciprocating compressor rod packing replacement prevents the escape of natural gas from the piston rod. In addition to reducing VOC emissions there would be a co-benefit of reducing other emissions (such as methane) as a result of increasing the frequency of rod packing replacement.

[43] U.S. Environmental Protection Agency. *Oil and Natural Gas Sector: Standards of Performance for Crude Oil and Natural Gas Production, Transmission, and Distribution – Background Technical Support Document for Proposed Standards*. July 2011. EPA Document Number EPA-453/R-11-002.
[44] U.S. Energy Information Administration. *Annual U.S. Natural Gas Wellhead Price. Energy Information Administration Natural Gas Navigator*. Retrieved online on December 12, 2010 at http://www.eia.doe.gov/dnav/ng/hist/n9190us3a.htm

Table 5-5. Cost of Control for Increasing the Frequency of Reciprocating Compressor Rod Packing Replacement

Oil and Gas Segment	Capital Costs ($2012)[a]	Annual Costs per Compressor ($/compressor-year)		VOC Cost of Control ($/ton)	
		Without Savings	With Savings	Without Savings	With Savings
Gathering and Boosting	$5,650	$2,153	$566	$1,132	$298
Processing	$4,280	$1,631	($2,443)	$334	($500)

[a.] 2011 TSD 2008 dollars converted to 2012 dollars using the Federal Reserve Economic Data GDP Price Deflater (5.69 percent).

Frequency of Replacement and/or Realignment/Retrofitting of the Piston Rod

Like the packing rings, piston rods on reciprocating compressors also deteriorate. Piston rods, however, wear more slowly than packing rings, having a life of about 10 years.[45] Rods wear "out-of-round" or taper when poorly aligned, which affects the fit of packing rings against the shaft (and therefore the tightness of the seal) and the rate of ring wear. An out-of-round shaft not only seals poorly, allowing more leakage, but also causes uneven wear on the seals, thereby shortening the life of the piston rod and the packing seal. Replacing or upgrading the rod can reduce reciprocating compressor rod packing emissions. Also, upgrading piston rods by coating them with tungsten carbide or chrome reduces wear over the life of the rod. We assume that operators will choose, at their discretion, when to replace/realign or retrofit the rod as part of regular maintenance procedures and replace the rod when appropriate when the compressor is out of service for other maintenance such as rod packing replacement. Therefore, we did not consider this option any further.

Updated Rod Packing Material

Although specific analyses have not been conducted, there may be potential for reducing VOC emissions by updating rod packing components made from newer materials, which can help improve the life and performance of the rod packing system. One option is to replace the

[45] U.S. Environmental Protection Agency. Lessons Learned from Natural Gas STAR Partners. *Reducing Methane Emissions from Compressor Rod Packing Systems*. Natural Gas STAR Program. 2006.

bronze metallic rod packing rings with longer lasting carbon-impregnated Teflon rings. Compressor rods can also be coated with chrome or tungsten carbide to reduce wear and extend the life of the piston rod.[46] Although changing the rod packing material has been identified as a potential VOC emission reduction option for reciprocating compressors, there is insufficient information on its emission reduction potential and use throughout the industry.

Economic Rod Packing Replacement

Another option facilities can use that has the potential to reduce costs and emissions is for facilities to use specific financial objectives and monitoring data to determine emission levels at which it is cost effective to replace rings and rods. Benefits of calculating and utilizing this "economic replacement threshold" include VOC emission reductions and natural gas cost savings. Using this approach, one Natural Gas STAR partner reportedly achieved savings of over $233,000 annually at 2006 gas prices. An economic replacement threshold approach would also result in operational benefits, including a longer life for existing equipment, improvements in operating efficiencies, and long-term savings.[47]

Gas Recovery (Routing of Emissions to a Process)

Description

Another control option for reciprocating compressors includes control techniques that recover natural gas leaking past the piston rod packing. We are aware of a system that captures the natural gas that would otherwise be vented and routes it back to the compressor engine to be used as fuel.[48] The vent gases are passed through a valve train that includes a demister and then are injected into the engine intake air after the air filter. In general, the technology consists of recovering vented emissions from the rod packing under negative pressure and routing these emissions of otherwise vented gas to the air intake of a reciprocating internal combustion engine that would burn the gas as fuel to augment the normal fuel supply. The system's computerized air/fuel control system would then adjust the normal fuel supply to accommodate the increased fuel made available from the recovered emissions and thereby take advantage of the recovered emissions while avoiding an overly rich fuel mixture.

---

[46] Ibid.

[47] U.S. Environmental Protection Agency. *Lessons Learned: Reducing Methane Emissions from Compressor Rod Packing Systems.* Natural Gas STAR. Environmental Protection Agency. 2006.

[48] REM Technology Inc. and Targa Resources. *Reducing Methane and VOC Emissions*. Presentation for the 2012 Natural Gas STAR Annual Implementation Workshop.

Subpart OOOO, as well as the 2015 proposed subpart OOOOa, provide a compliance option for reciprocating compressors that allows collecting emissions from the rod packing using a rod packing emissions collection system which operates under negative pressure and routing the rod packing emissions to a process through a closed vent system. Both of the above systems, if installed using a closed vent system meeting the subpart OOOO and subpart OOOOa requirements, could potentially be used for this compliance option.

Control Effectiveness

One estimate obtained by the EPA states that the gas recovery system can result in the elimination of over 99 percent of VOC and methane emissions that would otherwise occur from the venting of the emissions from the compressor rod packing.[49] The emissions that would have been vented are combusted in the compressor engine to generate power.

If the facility is able to route rod packing vents to a VRU system, it is possible to recover approximately 95-100 percent of emissions. If the gas is routed to a flare, approximately 95 percent of the methane and VOC are reduced.

Cost Impacts

One estimate reported that the cost per engine would be approximately $12,000 (does not include installation costs). Some costs would be mitigated by fuel gas savings, as using the captured gas to displace some of the purchased fuel would require less fuel to be purchased in order to run the compressor engine. The fuel cost saving based on a 4 throw compressor with moderate leak rate would be an estimated $6,500 per year.[50] This technique is discussed further in the Natural Gas STAR PRO Fact Sheet titled "Install Automated Air/Fuel Ratio Controls".[51] This document reported an average fuel gas savings of 78 Mcf/day per engine with the gas recovery system installed. Based on our review of information on this technology, we conclude that this technology has merit and would provide better emission reductions than increasing the replacement of rod packing from every 4 years to every 3 years since the emissions would be captured under negative pressure, allowing all emissions to be routed to the engine. It is our

[49] REM Technology Inc., et al. *Profitable Use of Vented Emission in Oil & Gas Production*. Prepared with support from the Climate Change and Emissions Management Corporation (CCEMC). 2013.
[50] REM Technology Inc. Presentation to the U.S. Environmental Protection Agency on December 1, 2011. EPA Docket ID No. EPA-HQ-OAR-2010-0505.
[51] U.S. Environmental Protection Agency. Gas STAR PRO No. 104. *Install Automated Air/Fuel Ratio Controls*. 2011. Available at: http://epa.gov/gasstar/documents/auto-air-fuel-ratio.pdf.

understanding that this technology may not be applicable to every compressor installation and situation.

For a VRU, assuming the proper equipment is already available at the facility, capturing the rod packing emissions would require minimal costs. The investment would only need to include the cost of piping and installation. While we have not obtained a cost estimate specifically for routing rod packing vents to a VRU, this process has been studied for dehydrators and would be similar for rod packing systems. According to the Natural Gas STAR PRO Fact Sheet titled "Pipe Glycol Dehydrator to Vapor Recovery Unit,"[52] the cost for planning and installing additional piping is approximately $2,000. Routing to a VRU also provides additional incentive as there is a value associated with recovered gas. However, the installation of a VRU to only capture rod packing emissions may not be economically viable if an additional compressor system is required. If the VRU is already present at the facility, the incremental cost to capture the rod packing vent gas can be recovered from the value of the additional captured natural gas.

Although gas recovery has been identified as a potential VOC emission reduction option for reciprocating compressors, there is insufficient information on its availability as a reasonably available control option for reducing reciprocating compressor VOC emissions. However, we recommend that regulatory agencies consider this technology as a compliance option when implementing the RACT recommendations presented in section 5.4 of this chapter.

5.3.1.2 Centrifugal Compressors Equipped with Wet Seals

Potential control options to reduce emissions from centrifugal compressors equipped with wet seals include control techniques that limit the leaking of natural gas across the rotating shaft, and capture and destruction of the emissions by routing emissions to a process (e.g., a compressor or fuel gas system) or to a combustion device (discussed in detail in sections 4.3.1.2 of chapter 4). We evaluate below three available control options: (1) converting wet seals to dry seals; (2) routing emissions to a fuel gas system or compressor (process); and (3) routing emissions to a combustion device.

[52] U.S. Environmental Protection Agency. Gas STAR PRO No. 203. *Pipe Glycol Dehydrator to Vapor Recovery Unit*. 2011. Available at: http://epa.gov/gasstar/documents/pipeglycoldehydratortovru.pdf.

Converting Wet Seals to Dry Seals

Description

We evaluated the use of centrifugal compressor dry seals as an available VOC control option for wet seal centrifugal compressors. As noted in section 5.2.1 of this chapter, the VOC emission profile from the use of dry seals is considerably less than from the use of wet seals. Replacing wet seals with dry seals can therefore substantially reduce VOC emissions across the rotating shaft compared to wet seals, while simultaneously reducing operating costs and enhancing compressor efficiency compared to wet seals. During normal operation, dry seals leak at a rate of 6 scfm methane per compressor.[53] While this is equivalent to a wet seal's leakage rate at the seal face, wet seals generate additional emissions during degassing of the circulating oil. Gas separated from the seal oil before the oil is recirculated is usually vented to the atmosphere, bringing the total leakage rate for tandem wet seals to 47.7 scfm methane per compressor.[54,55] It is not practical or feasible in all situations, however, to retrofit an existing wet seal compressor with a dry seal compressor. We have received information that indicates that the conversion process requires a significant period of time to complete and the compressor would need to be out of commission for the conversion period.

Control Effectiveness

The emission reductions that would occur by replacing wet seal compressors with a dry seal compressor were calculated by subtracting the dry seal emissions from the emissions from a centrifugal compressor equipped with wet seals. We used the centrifugal compressor emission factors in Table 5-2 and estimated that VOC emissions would be reduced by 16.7 tpy per compressor.

Cost Impacts

The Natural Gas STAR Program estimated the cost of retrofitting dry seals on a centrifugal compressor equipped with wet seals to be $324,000 ($342,439 in 2012 dollars) for a

---

[53] U.S. Environmental Protection Agency. Lessons Learned Document. *Replacing Wet Seals with Dry Seals in Centrifugal Compressors*. October 2006. Available at http://epa.gov/gasstar/documents/ll_wetseals.pdf.

[54] U.S. Environmental Protection Agency, et al. *Methane's Role in Promoting Sustainable Development in the Oil and Natural Gas Industry*. World Gas Conference 10/2009. Available at: http://www.epa.gov/gasstar/documents/best_paper_award.pdf

[55] U.S Environmental Protection Agency. *Methodology for Estimating CH4 and CO2 Emissions from Natural Gas Systems*. *Inventory of U.S. Greenhouse Gas Emission and Sinks: 1990-2012*. Washington, DC. Annex 3. Table A-129.

two-seal dry seal system, which includes the cost of both seals and the dry gas conditioning, monitoring, control console and installation.[56] The annual costs were calculated as the capital recovery of the capital costs assuming a 20-year equipment life and 7 percent interest which is approximately $32,324 per compressor. The Natural Gas STAR Program estimated that the annual operation and maintenance savings from the installation of a dry seal compressor is $88,300 ($93,325 in 2012 dollars) in comparison to a wet seal compressor. In addition, the installation of dry seals reduces natural gas emissions by 10,721 Mscf/yr[57] which results in an estimated natural gas savings of $42,883 per year assuming a natural gas price of $4/Mcf. A summary of the capital and annual costs for replacing a wet seal compressor with a dry seal compressor is presented in Table 5-5 along with the VOC cost of control. As noted above, we have received information that indicates that the conversion process requires a significant period of time to complete and the compressor would need to be out of commission during the conversion period. Because of this, a facility may have to provide a temporary compressor in the interim that would add additional costs to the cost estimates we present in Table 5-6.

Table 5-6. Cost of Control of Replacing a Wet Seal Compressor with a Dry Seal Compressor

Oil & Natural Gas Segment	Capital Costs ($2012)	Annual Costs Per Compressor ($/compressor-year)		VOC Cost of Control ($/ton)	
		Without Savings [a]	With O&M and Natural Gas Savings [b]	Without Savings	With O&M and Natural Gas Savings
Processing	$342,439	$32,324	($103,884)	$1,931	($6,205)

[a.] Includes only the annualized capital costs of the retrofit of the dry seal system (20 years, 7% interest).
[b.] Includes the annualized capital costs, annual O&M savings and annual natural gas savings.

Routing Emissions to a Compressor or Fuel Gas System (Process)

Description

One option for reducing VOC emissions from the compressor wet seal fluid degassing system is to route the captured emissions back to the compressor suction or fuel system or other beneficial use (referred to collectively as routing to a process). Routing to a process would entail

[56] U.S. Environmental Protection Agency. Lessons Learned Document. *Replacing Wet Seals with Dry Seals in Centrifugal Compressors*. October 2006. Available at http://epa.gov/gasstar/documents/ll_wetseals.pdf.
[57] The natural gas savings was calculated by using the 16.7 tpy VOC reduction and dividing by the VOC/methane weight ratio of 0.278 to determine the amount of methane reduction that would be reduced (60.1 tpy). The methane emission reductions were converted to volumetric natural gas reductions assuming a natural gas density of 0.02082 tons/Mcf and a 82.9 volume percent conversion factor of methane to natural gas.

routing emissions via a closed vent system to any enclosed portion of a process unit (e.g., compressor or fuel gas system) where the emissions are predominantly recycled, consumed in the same manner as a material that fulfills the same function in the process, transformed by chemical reaction into materials that are not regulated materials, incorporated into a product, or recovered. Emissions that are routed to a process are assumed to result in the same or greater emission reductions as would have been achieved had the emissions been routed through a closed vent system to a combustion device. Table 5-7 presents a summary of the estimated emission reductions from routing emissions from the wet seal fluid degassing system to a process. For purposes of this analysis, we assume that routing VOC emissions from a wet seal fluid degassing system to a process reduces VOC emissions greater than or equal to a combustion device (i.e., greater than or equal to 95 percent).

Table 5-7. Estimated Annual Centrifugal Compressor VOC Emission Reductions for Routing Wet Seal Fluid Degassing System to a Process[58,59]

Oil & Gas Segment	Individual Compressor VOC Emission Reductions (tons/compressor-year)
Processing	$\geq$ 18.1

Cost Impacts

The capital costs of a system to route the seal oil degassing system to a process is estimated to be $23,252,[60] converting to 2012 dollars using the Federal Reserve Economic Data GDP Price Deflater (Change in GDP: Implicit Price Deflator from 2008 to 2012 (5.69 percent)).[61] The estimated costs include an intermediate pressure degassing drum, new piping,

[58] U.S. Environmental Protection Agency. *Oil and Natural Gas Sector: Standards of Performance for Crude Oil and Natural Gas Production, Transmission, and Distribution - Background Supplemental Technical Support Document for the Final New Source Performance Standards*. April 2012. EPA Docket Number EPA-HQ-OAR-2010-0505-4550.
[59] Ibid.
[60] Ibid.
[61] U.S. Bureau of Economic Analysis. *Gross Domestic Product: Implicit Price Deflator (GDPDEF]*, retrieved from FRED, Federal Reserve Bank of St. Louis. https://research.stlouisfed.org/fred2/series/GDPDEF/ March, 26, 2015.

gas demister/filter, and a pressure regulator for the fuel line. The annual costs were estimated to be $2,553 assuming a 15 year equipment life at 7 percent interest.

Potential natural gas savings for this option were estimated to be 12 Mcf/yr and assumes that greater than or equal to 95 percent of the 47.7 scfm methane emissions are controlled, an annual operating factor of 43.6 percent, and the 82.9 volume percent conversion factor of methane to natural gas. Assuming a natural gas savings of $4/Mcf, the natural gas savings equates to approximately $47,553 per year. Table 5-8 presents a summary of the cost of control for routing emissions to a process.

Table 5-8. VOC Cost of Control for Routing Wet Seal Fluid Degassing System to a Process[a]

Oil and Gas Segment	Capital Costs ($2012)[a]	Annual Costs per Compressor ($/compressor-year)		VOC Cost of Control ($/ton)	
		Without Savings	With Savings	Without Savings	With Savings
Processing	$23,252	$2,553	($47,553)	$141	($2,621)

NA = Not Applicable
a. 2011 TSD 2008 dollars converted to 2012 dollars using the Federal Reserve Economic Data GDP Price Deflater (Change in GDP: Implicit Price Deflator from 2008 to 2012 (5.69 percent)).[62]

Routing Emissions to a Combustion Device

Description

Combustion devices are commonly used in the oil and natural gas industry to combust VOC emission streams. A combustion device generally achieves 95 percent reduction of VOC when operated according to the manufacturer instructions. Typical combustion devices used in the oil and natural gas industry to control VOC emissions are discussed in greater detail in section 4.3.1.2 of chapter 4 of this document. For this analysis, we assumed that the entrained natural gas from the seal oil that is removed in the degassing process would be directed to a combustion device that achieves a 95 percent reduction of VOC. The wet seal emissions in Table 5-2 were used along with the control efficiency to calculate the emission reductions. Table 5-9

[62] U.S. Bureau of Economic Analysis, Gross Domestic Product: Implicit Price Deflator (GDPDEF], retrieved from FRED, Federal Reserve Bank of St. Louis. https://research.stlouisfed.org/fred2/series/GDPDEF/ March, 26, 2015.

presents a summary of the estimated emission reductions from routing emissions from the wet seal to a combustion device.

Table 5-9. Estimated Annual VOC Emission Reductions for Routing Wet Seal Fluid Degassing System to a Combustion Device[63,]

Oil & Gas Segment	Individual Compressor VOC Emission Reductions (tons/compressor-year)
Processing	18.1

Cost Impacts

Routing the captured gas from the centrifugal compressor wet seal degassing system to an existing combustion device or installing a new combustion device has associated capital costs and operating costs. The capital and annual costs of the combustion device (an enclosed flare for the analysis) were calculated using the methodology in the EPA Control Cost Manual.[64] However, Control Cost Manual guidelines specify that 630 operating labor hours per year for a combustion device, which we believe is unreasonable because many of these sites are unmanned and would most likely be operated remotely. Therefore, we assumed that the operating labor would be more similar to that estimated for a condenser in the Control Cost Manual, which is 130 hours per year. The heat content of the gas stream was calculated using information from the 2011 Gas Composition Memorandum. Table 5-10 presents a summary of the capital and annual costs for wet seals routed to a flare, as well as the VOC cost of control. There is no cost savings estimated for this option because the recovered natural gas is combusted.

[63] U.S. Environmental Protection Agency. *Oil and Natural Gas Sector: Standards of Performance for Crude Oil and Natural Gas Production, Transmission, and Distribution - Background Supplemental Technical Support Document for the Final New Source Performance Standards*. April 2012. EPA Docket Number EPA-HQ-OAR-2010-0505-4550.

[64] U.S. Environmental Protection Agency. *OAQPS Control Cost Manual: Sixth Edition* (EPA 452/B-02-001). Research Triangle Park, NC.

.

Table 5-10. Cost of Control for Routing Wet Seal Fluid Degassing System to a Combustion Device

Industry Segment	Capital Costs ($)		Annual Costs per Compressor ($/compressor-year)		VOC Cost of Control New CD ($/ton)	VOC Cost of Control Existing CD ($/ton)
	New CD	Existing CD	New CD	Existing CD		
Processing	$71,783	$23,252	$114,146	$3,311	$6,292	$183

CD = Control Device

5.3.2 Existing Federal, State and Local Regulations

5.3.2.1 Federal Regulations that Specifically Require Control of VOC Emissions

Under the 2012 NSPS, reciprocating compressors are required to limit VOC emissions by replacing the rod packing after 26,000 hours of operation or 36 months since the previous rod packing replacement. Alternatively, an owner or operator is allowed to route rod packing emissions to a process through a closed vent system under negative pressure. For centrifugal compressors in the processing segment, the 2012 NSPS requires that VOC emissions be reduced from each centrifugal compressor wet seal fluid degassing system by 95 percent.

5.3.2.2 State and Local Regulations that Specifically Require Control of VOC Emissions

States may have permitting restrictions on VOC emissions that may apply to an emissions source as a result of an NSR NA or PSD permit (e.g., on a case-by-case basis) requirements based on air quality maintenance or improvement goals of an area. Permits specify what construction is allowed, what emission limits must be met, and often how the source must be operated. To assure that sources follow the permit requirements, permits also contain monitoring, recordkeeping, and reporting requirements.

Montana requires oil and natural gas well facilities to control emissions from the time the well is completed until the source is registered or permitted. Each piece of oil or natural gas well facility equipment, with VOC vapors of 200 Btu/scf or more with a PTE greater than 15 tpy, is required to (1) capture and route emissions to a natural gas pipeline, (2) route to a smokeless combustion device equipped with an electronic ignition device or a continuous burning pilot

system meeting the requirements of 40 CFR 60.18 and operating at 95 percent or greater control efficiency, or (3) route to air pollution control equipment with equal or greater control efficiency than a smokeless combustion device. This includes the control of emissions from compressor engines used for transmission of natural gas (Registration of Air Contaminant Sources, Rule 17.8.1711 Oil or Gas Well Facilities Emission Control Requirements).

Colorado (Regulation 7, XVII.B.3.b and c) requires that uncontrolled actual hydrocarbon emissions from wet seal fluid degassing systems on wet seal centrifugal compressors be controlled by at least 95 percent, unless the centrifugal compressor is subject to 40 CFR part 60, subpart OOOO. Additionally, Regulation 7 requires that rod packing on any reciprocating compressor located at a natural gas compressor station be replaced every 26,000 hours of operation or every 36 months, unless the reciprocating compressor is subject to 40 CFR part 60, subpart OOOO.

5.4 Recommended RACT Level of Control

For reciprocating compressors, there are federal regulations and one state that requires the periodic replacement of reciprocating compressor packing. These regulations require the replacement of reciprocating compressor rod packing every 3 years or after 26,000 hours of operation. The NSPS also provides the alternative of routing rod packing emissions to a process via a closed vent system under negative pressure.

As noted in section 5.3 of this chapter, the most significant volume of VOC emissions are associated with piston rod packing systems. We found that under the best conditions, regular rod packing replacement, when carried out approximately every three years, effectively controls emissions and helps prevent excessive rod wear. The cost of control for requiring the replacement of reciprocating packing at this frequency was estimated to be $1,132 per ton of VOC reduced without savings and $298 per ton of VOC reduced considering savings for gathering and boosting station compressors, and about $334 per ton of VOC reduced without savings and an overall net savings per ton of VOC reduced for the processing segment reciprocating compressors considering savings. Based on the emission reductions, costs (considering gas savings) and existing and currently implemented regulations that require the replacement of the reciprocating compressor packing every 36 months or after 26,000 hours of operation, we recommend this control option as RACT for reciprocating compressors in the production and processing segments (excluding compressors at the well site). We also

recommend that regulatory agencies provide operators the compliance alternative of routing rod packing emissions to a process via a closed vent system under negative pressure.

For centrifugal compressors, there are already federal, state and local regulations that require the capture and 95 percent control of emissions from wet seal fluid degassing systems from centrifugal compressors. Although dry seal systems have inherently low VOC emissions and the option of routing to a process has at least a 95 percent control efficiency, the replacement of wet seals with dry seals and routing to a process may not be technically feasible or practical options for some centrifugal compressors. The integration of a centrifugal compressor into an operation may require a certain compressor size or design that is not available in a dry seal model, and, in the case of capture of emissions with routing to a process, there may not be down-stream equipment capable of handling a low pressure fuel source. As a result of our evaluation of the technical feasibility and practicality of existing available controls, we recommend RACT be 95 percent control of emissions from the wet seal degassing system, which can be achieved by using a closed vent system and routing emissions to a combustor or routing the emissions back to the compressor or fuel line (routing to the process). For the processing segment, we assume that there is an existing combustion device on-site and the estimated cost of control would be about $183 per ton of VOC reduced for facilities to route emissions to the existing combustion device, or about $141 per ton of VOC reduced for facilities to route the captured emissions back to the compressor or fuel line.

In summary, we recommend the following as RACT for compressors:

(1) <u>RACT for Reciprocating Compressors Located Between the Wellhead and Point of Custody Transfer to the Natural Gas Transmission and Storage Segment (Excludes the Well Site):</u> We recommend that each reciprocating compressor reduce VOC emissions by replacing the rod packing after 26,000 hours of operation or 36 months since the last rod packing replacement. We also recommend that an alternative be provided to allow routing of rod packing emissions to a process via a closed vent system under negative pressure in lieu of the specified rod packing replacement periods.

(2) <u>RACT for Centrifugal Compressors Using Wet Seals Located Between the Wellhead and Point of Custody Transfer to the Natural Gas Transmission and Storage Segment (Excludes the Well Site):</u> We recommend that each centrifugal compressor using wet

seals reduce VOC emissions from each wet seal fluid gassing system by reducing VOC emissions by 95 percent.

5.5 Factors to Consider in Developing Compressor Compliance Procedures

5.5.1 Reciprocating Compressor Compliance Recommendations

In order to ensure and demonstrate compliance with the recommended RACT for reciprocating compressors, we recommend that regulatory agencies require facilities to maintain a record of the date of the most recent reciprocating compressor rod packing replacement, monitor and keep records of the number of hours of operation and/or track the number of months since the last rod packing replacement for each reciprocating compressor (to meet the requirement that the packing is changed out before the total number of hours of operation reaches 26,000 hours or the number of months since the most recent rod packing replacement reaches 36 months) and maintain records of instances where the reciprocating compressor was not operated in compliance with RACT. This may require the installation of an operating hours meter on the engine to track the number of hours of operation. We also recommend that regulatory agencies require annual reports of the cumulative hours of operation or number of months since packing replacement for each reciprocating compressor and instances when there were deviations where the reciprocating compressor was not operated in compliance with the recommended RACT.

For applications in which operators choose to opt for the alternative of routing of rod packing emissions to a process via a closed vent system under negative pressure, we recommend that regulatory agencies require facilities to maintain records of the date of installation of a rod packing emissions collection system and closed vent system and maintain records of instances of deviations in cases where the reciprocating compressor was not operated in compliance with requirements. We also recommend that regulatory agencies require annual reports for each reciprocating compressor complying with this option indicating when there were deviations where the reciprocating compressor was not operated in compliance with the recommended RACT. We include closed vent system design and compliance measure recommendations in section 5.5.4 of this chapter.

The appendix to this document presents example model rule language that incorporates compliance elements recommended in this section that states may choose to use in whole or in part.

5.5.2 Centrifugal Compressor Equipped with a Wet Seal Recommendations

In order to ensure that VOC emissions are reduced by at least 95 percent (the recommended RACT level of control) from a centrifugal compressor equipped with wet seals when using a control device or other control measure (such as routing to a process), the centrifugal compressor should be equipped with a cover that is connected through a closed vent system that routes emissions to the control device (or process) that meets the RACT level of control. Recommended cover and closed vent system design and operation measures are specified in sections 5.5.3 and 5.5.4. Recommended control device operation and monitoring provisions for specified controls to assure compliance are presented in section 5.5.5.

The appendix of this document presents example model rule language that incorporates compliance elements recommended in this section that states may choose to use in whole or in part.

5.5.3 Recommendations for Cover Design

The cover and all openings on the cover (e.g., access hatches, sampling ports, pressure relief valves and gauge wells) should form a continuous impermeable barrier over the entire surface area of the liquid in the wet seal fluid degassing system. Each cover opening should be secured in a closed, sealed position (gasket lid or cap) whenever material is in the unit except when it is necessary to open as follows:

(1) To add material to or remove material from the unit (including openings necessary to equalize or balance the internal pressure of the unit following changes in the level of material in the unit);

(2) To inspect or sample the material in the unit;

(3) To inspect, maintain, repair, or replace equipment located in the unit; or

(4) To vent liquids, gases or fumes from the unit through a closed-vent system designed and operated in accordance specified control device requirements (see section 5.5.5) or to a process.

It is recommended that regulatory agencies require olfactory, visual and auditory inspections of covers for defects that could result in air emissions on a monthly basis. We

recommend regulatory agencies require that any detected defects be repaired as soon as technically feasible to minimize emissions (and prior to the end of the next shutdown).

5.5.4 Recommendations for Closed Vent Systems

The closed vent system should be designed and operated with no detectable emissions (which can be monitored by monthly olfactory, visual and auditory inspections) and should be operating at least 95 percent of the year. We recommend regulatory agencies require that any detected defects be repaired as soon as technically feasible to minimize emissions (and prior to the end of the next shutdown).

With the exception of low leg drains, high point bleeds, analyzer vent, open-ended valves and safety devices, if the closed vent system contains one or more bypass devices that could be used to divert all or a portion of the gases, vapors, or fumes from entering the control device or to a process, regulatory agencies should require that owners or operators either:

(1) Install, calibrate, maintain and operate a flow indicator at the inlet to the bypass device that could divert the stream away from the control device or process to the atmosphere that sounds an audible and visual alarm, or, initiates notification via remote alarm to the nearest field office, when the bypass device is open such that the stream is being, or could be, diverted away from the control device or process to the atmosphere; or

(2) Secure the bypass device valve installed at the inlet to the bypass device in the non-diverting position using a car-seal or a lock-and-key type configuration. We recommend requiring bypass devices to be equipped with flow indicators that sound an alarm when the stream is diverted away from the control device or process to the atmosphere and that records be maintained of times when the alarm sounds.

5.5.5 Recommendations for Control Device Operation and Monitoring

If a control device is used to comply with the recommended 95 percent VOC emission reduction RACT level of control, we advise that the device be required to operate at all times when gases, vapors, and fumes are vented from the wet seal fluid degassing system through the closed vent system to the control device. The following paragraphs present select emission control options and suggested operation and monitoring requirements, as appropriate to assure compliance with the recommended RACT level of control.

Enclosed Combustion Devices

If an enclosed combustion device (e.g., thermal vapor incinerator, catalytic vapor incinerator, boiler, or process heater) is used to meet the 95 percent VOC emission reduction RACT level of control, it should be designed to reduce the mass content of VOC emissions by 95 percent or greater; and (1) maintained in a leak free condition, (2) installed and operated with a continuous burning pilot flame, and (3) operated with no visible emissions.

We recommend that the visible emissions test (using section 11 of EPA Method 22, 40 CFR part 60, appendix A-7) be performed at least once every calendar month. If a combustion device fails the visible emissions test, sources should be required to follow manufacturer's repair instructions, if available, or best combustion engineering practice as outlined in the unit inspection and maintenance plan, to return the unit to compliant operation. We recommend all inspection, repair and maintenance activities for each unit be recorded in a maintenance and repair log that can be made available for inspection. Following return to operation from maintenance or repair activity, each device should be required to pass a Method 22, 40 CFR part 60, appendix A-7 visual emissions test.

We recommend regulatory agencies require that sources meeting the 95 percent VOC emission reduction RACT level of control by routing emissions to a combustion device conduct performance tests and/or design analyses that demonstrate that the combustion device being used meets the required 95 percent VOC emission reduction RACT level of control (see section F of the appendix to this document for performance testing procedures for control devices that we recommend be used to demonstrate performance requirements).

Routing to a Process

Routing to a process would entail routing emissions via a closed vent system to any enclosed portion of a process unit where the emissions are predominantly recycled, consumed in the same manner as a material that fulfills the same function in the process, transformed by chemical reaction into materials that are not regulated materials, incorporated into a product, or recovered. VRUs and flow lines that "route emissions to a process" would be considered part of the process and would not be considered control devices that are subject to standards, but the closed vent design, operation and monitoring requirements specified in sections 5.5.3 and 5.5.4 would apply.

6.0 PNEUMATIC CONTROLLERS

The oil and natural gas industry uses a variety of process control devices to operate valves that regulate pressure, flow, temperature, and liquid levels. Most instrumentation and control equipment falls into one of three categories: (1) pneumatic; (2) electrical; or (3) mechanical. Of these, only pneumatic devices are direct sources of air emissions. Pneumatic controllers are pneumatic devices used throughout the oil and natural gas industry as part of the instrumentation to control the position of valves and may be actuated using pressurized natural gas (natural gas-driven) or may be actuated by another means such as a pressurized gas other than natural gas, solar, or electric. This chapter provides a description of pneumatic controllers that are used in the oil and natural gas industry, including their function and associated emissions. This chapter also provides control techniques used to reduce VOC emissions from these pneumatic controllers, along with costs and emission reductions. Finally, this chapter provides a discussion of our recommended RACT and the associated VOC emission reductions and costs for pneumatic controllers.

6.1 Applicability

For the purposes of this guideline, a pneumatic controller is an automated instrument used to maintain a process condition such as liquid level, pressure, delta-pressure and temperature. The emissions and emission controls discussed herein would apply to natural-gas-driven pneumatic controllers in the oil and natural gas industry located from the wellhead to a natural gas processing plant (including the natural gas processing plant) or from the wellhead to the point of custody transfer to an oil pipeline.

6.2 Process Description and Emission Sources

6.2.1 Process Description[65]

Natural gas-driven pneumatic controllers come in a variety of designs for a variety of uses. For the purposes of this guideline, they are characterized primarily by their emissions characteristics:

(1) *Continuous bleed pneumatic controllers* are used to modulate flow, liquid level, or pressure, and gas is vented continuously at a rate that may vary over time. Continuous bleed controllers are further subdivided into two types based on their bleed rate:

   a. *Low bleed*, having a bleed rate of less than or equal to 6 standard cubic feet per hour (scfh).

   b. *High bleed*, having a bleed rate of greater than 6 scfh.

(2) *Intermittent bleed or snap acting pneumatic controllers* release gas only when they open or close a valve or as they throttle the gas flow.

(3) *Zero bleed pneumatic controllers* do not bleed natural gas to the atmosphere. These natural gas-driven pneumatic controllers are self-contained devices that release gas to a downstream pipeline instead of to the atmosphere.

Pneumatic controllers often make use of available high-pressure natural gas to operate valves. The supply gas pressure is modulated by a process condition, and then flows to the valve controller where the signal is compared with the process set-point to adjust gas pressure in the valve actuator. In these natural gas-driven pneumatic controllers, natural gas may be released intermittently with every actuation of the valve. In other designs, natural gas may be released continuously from the valve control pilot. The rate at which the continuous release occurs is referred to as the bleed rate. Bleed rates are dependent on the design and operating characteristics of the device. Similar designs will have similar steady-state rates when operated under similar conditions. It is our understanding that self-contained devices that release natural gas to a downstream pipeline instead of to the atmosphere have no emissions. “Closed loop” systems are applicable only in instances with very low pressure[66] and may not be suitable to replace many

---

[65] U.S. Environmental Protection Agency. *Lessons Learned: Options for Reducing Methane Emissions From Pneumatic Devices in the Natural Gas Industry*. Office of Air and Radiation: Natural Gas STAR Program. Washington, DC. October 2006.

[66] Memorandum to Bruce Moore, U.S. Environmental Protection Agency, from Denise Grubert, EC/R Incorporated. *Meeting Minutes from EPA Meeting with the American Petroleum Institute (API)*. October 2010.

applications of continuous or intermittent bleed pneumatic devices. Therefore, this guideline does not address these self-contained devices further.

Intermittent controllers are devices that only emit gas during actuation and do not have a continuous bleed rate. The actual amount of emissions from an intermittent controller is dependent on the amount of natural gas vented per actuation and how often it is actuated. Bleed devices also vent an additional volume of gas during actuation, in addition to the controller's bleed stream. Since actuation emissions serve the controller's functional purpose and can be highly variable, the emissions characterized for high-bleed and low-bleed devices in this analysis (as described in section 6.2.2) account for only the continuous flow of emissions (i.e., the bleed rate) and do not include emissions directly resulting from actuation. Intermittent controllers are assumed to have zero bleed emissions. For most applications (but not all), intermittent controllers serve functionally different purposes than bleed devices and would not be a technically practical control option for all continuous bleed controllers. It is assumed intermittent, or no-bleed, controllers meet the definition of a low-bleed.

As previously indicated, not all pneumatic controllers are natural gas-driven. At sites with a continuous and reliable source of electricity, controllers can be actuated by an instrument air system that uses compressed air instead of natural gas. These sites may also use mechanical or electrically powered pneumatic controllers. In some instances, solar-powered controllers may be feasible. Because these devices are not natural gas-driven, they do not directly release natural gas or VOC. However, electrically powered systems have energy impacts, with associated secondary impacts related to generation of the electrical power required to drive the instrument air compressor system. To our knowledge natural gas processing plants are the only facilities in the oil and natural gas industry that are likely to have electrical service sufficient to power an instrument air system, and that most existing natural gas processing plants use instrument air instead of natural gas-driven devices.[67]

[67] U.S. Environmental Protection Agency/GRI. *Methane Emissions from the Natural Gas Industry, Vol. 12: Pneumatic Devices*. EPA-600/R/-96-080k. June 1996.

6.2.2 Emissions Data

6.2.2.1 Summary of Major Studies and Emissions

In the evaluation of the emissions from pneumatic controllers and the potential options available to reduce these emissions, numerous studies were consulted. Table 6-1 lists these references with an indication of the type of relevant information contained in each reference. In addition to these sources, we evaluated the peer reviewer and public comments received on the EPA's white paper, "Oil and Natural Gas Sector Pneumatic Devices."[68]

Table 6-1. Major Studies Reviewed for Consideration of Emissions and Activity Data

Report Name	Affiliation	Year of Report	Activity Factors	Emissions Data	Control Options
Greenhouse Gas Reporting Program (Annual Reporting; Current Data Available for 2011-2013)[a]	EPA	2014	Facility-Level	X	X
Inventory of Greenhouse Gas Emissions and Sinks: 1990-2012[b]	EPA	2014	Nationwide/ Regional	X	
Methane Emissions from the Natural Gas Industry[c]	EPA/GRI	1996	Nationwide	X	
Methane Emissions from the Petroleum Industry[d]	EPA/GRI	1996	Nationwide	X	
Methane Emissions from the U.S. Oil Industry[e]	EPA	1999	Nationwide	X	
Oil and Gas Emission Inventories for Western States[f]	WRAP	2005	Regional	X	
Natural Gas STAR Program[g]	EPA	2000- 2010	Voluntary	X	X
Measurements of Methane Emissions from Natural Gas Production Sites in the United States[h]	Multiple Affiliations, Academic and Private	2013	Nationwide	X	

[68] U.S. Environmental Protection Agency. *Oil and Natural Gas Sector Pneumatic Devices*. *Report for Oil and Natural Gas Sector Pneumatic Devices Review Panel*. Office of Air Quality Planning and Standards (OAQPS). April 2014. Available at http://www.epa.gov/airquality/oilandgas/2014papers/20140415pneumatic.pdf

Report Name	Affiliation	Year of Report	Activity Factors	Emissions Data	Control Options
Determining Bleed Rates for Pneumatic Devices in British Columbia[i]	The Prasino Group	2013	British Columbia	X	
Air Pollutant Emissions from the Development, Production, and Processing of Marcellus Shale Natural Gas[j]	Carnegie Mellon University	2014	Regional (Marcellus Shale)	X	
Economic Analysis of Methane Emission Reduction Opportunities in the U.S. Onshore Oil and Natural Gas Industries[k]	ICF International	2014	Nationwide	X	X

[a.] U.S. Environmental Protection Agency. *Greenhouse Gas Emissions Reporting From the Petroleum and Natural Gas Industry: Background Technical Support Document*. Climate Change Division. Washington, DC.
[b.] U.S Environmental Protection Agency. *Methodology for Estimating CH_4 and CO_2 Emissions from Natural Gas Systems. Greenhouse Gas Inventory: Emission and Sinks 1990-2012*. Washington, DC. And U.S Environmental Protection Agency. *Methodology for Estimating CH_4 and CO_2 Emissions from Petroleum Systems. Greenhouse Gas Inventory: Emission and Sinks 1990-2012*. Washington, DC.
[c.] U.S. Environmental Protection Agency/GRI. *Methane Emissions from the Natural Gas Industry, Vol. 2: Technical Report.* EPA-600/R-96-080b. June 1996; U.S. Environmental Protection Agency/GRI. *Methane Emissions from the Natural Gas Industry, Vol. 3: General Methodology*. EPA-600/R-96-080c. June 1996; U.S. Environmental Protection Agency/GRI. *Methane Emissions from the Natural Gas Industry, Vol. 5: Activity Factors*. EPA-600/R-96-080e. June 1996; and U.S. Environmental Protection Agency. *Methane Emissions from the Natural Gas Industry, Vol. 12: Pneumatic Devices*. EPA-600/R-96-080k. June 1996.
[d.] U.S. Environmental Protection Agency/GRI. *Methane Emissions from the U.S. Petroleum Industry. Draft Report*. June 14, 1996.
[e.] ICF Consulting. *Estimates of Methane Emissions from the U.S. Oil Industry*. Prepared for the U.S. Environmental Protection Agency. 1999.
[f.] ENVIRON International Corporation. *Oil and Gas Emission Inventories for the Western States.* Prepared for Western Governors Association. December 27, 2005.
[g.] U.S. Environmental Protection Agency. *Lessons Learned: Options for Reducing Methane Emissions From Pneumatic Devices in the Natural Gas Industry*. Office of Air and Radiation: Natural Gas STAR. Washington, DC. October 2006.
[h.] Memorandum to Bruce Moore, U.S. EPA from Heather Brown, EC/R. *Composition of Natural Gas for Use in the Oil and Natural Gas Sector Rulemaking*. July 2011.
[i.] U.S. Environmental Protection Agency. *Lessons Learned: Convert Gas Pneumatic Controls to Instrument Air*. Office of Air and Radiation: Natural Gas Star. Washington, DC. 2006.
[j.] U.S. Environmental Protection Agency. Pro Fact Sheet No. 301. *Convert Pneumatics to Mechanical Controls*. Office of Air and Radiation: Natural Gas Star. Washington, DC. September 2004.
[k.] Canadian Environmental Technology Advancement Corporation (CETAC)-WEST. *Fuel Gas Best Management Practices: Efficient Use of Fuel Gas in Pneumatic Instruments*. Prepared for the Canadian Association of Petroleum Producers. May 2008

6.2.2.2 Representative Pneumatic Controller Device Emissions

For purposes of this guideline, continuous bleed pneumatic controllers are classified into two types based on their emissions rates: (1) high bleed controllers and (2) low bleed controllers.

A controller is considered to be high bleed when the continuous bleed emissions are in excess of 6 scfh, while low bleed devices bleed at a rate less than or equal to 6 scfh.[69]

In support of the development of the 2012 NSPS, and these guidelines, we consulted information in the appendices of the Natural Gas STAR Lessons Learned document on pneumatic devices, subpart W of the GHGRP, the GHG Inventory, as well as pneumatic controller vendor information used during the development of the 2012 NSPS.[70] The data obtained from vendors included emission rates, costs, and any other pertinent information for each pneumatic controller model (or model family). All pneumatic controllers that a vendor offered were itemized and inquiries were made into the specifications of each device and whether it was applicable to oil and natural gas operations. High bleed and low bleed devices were differentiated using the 6 scfh threshold.

Although, by definition, a low bleed device can emit up to 6 scfh, through vendor research, a typical low bleed device available currently on the market emits lower than the maximum rate allocated for the device type. Specifically, low bleed devices on the market today have bleed rates from 0.2 scfh up to 5 scfh. Similarly, the available bleed rates for a high bleed device vary significantly from venting as low as 7 scfh to as high as 100 scfh.[71,72] While the vendor data provides useful information on specific makes and models, it did not yield sufficient information about the prevalence of each model type in the population of devices in the oil and natural industry, which is an important factor in developing a representative emission factor. Therefore, in support of these guidelines, we have determined that the best available emission estimates for pneumatic controllers in the production segment are from the GHGRP. For the natural gas processing segment, we determined that the quantified representative methane

---

[69] The classification of high bleed and low bleed devices originated from a report by Pacific Gas & Electric (PG&E) and the Gas Research Institute (GRI) in 1990 titled "Unaccounted for Gas Project Summary Volume." This classification was adopted for the October 1993 Report to Congress titled "Opportunities to Reduce Anthropogenic Methane Emissions in the United States". As described on page 2-16 of the report, "devices with emissions or 'bleed rates' of 0.1 to 0.5 cubic feet per minute are considered to be 'high bleed' types (PG&E 1990)." This range of bleed rates is equivalent to 6 to 30 cubic feet per hour.

[70] U.S. Environmental Protection Agency. *Oil and Natural Gas Sector: Standards of Performance for Crude Oil and Natural Gas Production, Transmission, and Distribution – Background Technical Support Document for Proposed Standards*. July 2011. EPA Document Number EPA-453/R-11-002.

[71] U.S. Environmental Protection Agency. *Greenhouse Gas Emissions Reporting From the Petroleum and Natural Gas Industry: Background Technical Support Document*. Climate Change Division. Washington, DC. November 2010.

[72] All rates are listed at an assumed supply gas pressure of 20 psig.

emissions from a continuous bleed pneumatic controller based on natural gas emission rates presented in Volume 12 of the EPA/GRI report used in the 2012 NSPS TSD is the best available emissions information[73].

The basic approach used for this analysis of emissions from pneumatic controllers was to first approximate the natural gas emissions from an average high bleed and low bleed pneumatic controller in the production and processing segments and then estimate methane and VOC emissions using a representative gas composition from the 2011 Gas Composition Memorandum. A bleed rate of 1.39 scfh was used for a low bleed controller, and a bleed rate of 37.3 scfh was used for a high bleed controller. The specific gas composition ratio used for the production and processing segments was 0.278 pounds VOC per pound methane. Table 6-2 summarizes the estimated bleed emissions for a representative pneumatic controller by industry segment (for production and processing segments) and device type.

Table 6-2. Average Emission Rates for High Bleed and Low Bleed Pneumatic Controllers in the Oil and Natural Gas Industry[a]

Industry Segment	High Bleed (tpy)		Low Bleed (tpy)	
	CH_4	VOC	CH_4	VOC
Oil and Natural Gas Production[b]	5.3	1.47	0.2	0.06
Natural Gas Processing[d]	1.00	0.28	1.0	0.28

[a.] The conversion factor used in this analysis is 1 Mcf of methane is equal to 0.0208 tons methane.
[b.] Natural gas production methane emissions are derived from the GHGRP (subpart W).
[c.] Oil production methane emissions are derived from the GHGRP (subpart W). It is assumed only continuous bleed devices are used in oil production.
[d.] Natural gas processing segment methane emissions are derived from Volume 12 of the 1996 EPA/GRI report. Emissions from devices in the processing segment were determined based on data available for snap-acting and continuous bleed devices. Further distinction between high and low bleed could not be determined based on available data. For the natural gas processing segment, it is assumed that existing natural gas plants have already replaced pneumatic controllers with other types of controls (i.e., an instrument air system) and any high bleed devices that remain are safety related.

For the natural gas processing segment, this analysis assumes that existing natural gas plants have already replaced pneumatic controllers with other types of controls (i.e., an instrument air system) and any high bleed devices that remain are safety related.

[73] GRI/EPA Research and Development. Methane Emissions from the Natural Gas Industry; Volume 12: Pneumatic Devices. (1996) EPA-600/R-96-0801. Table 4-11, page 56. epa.gov/gasstar/tools/related.html

6.3 Available Controls and Regulatory Approaches

6.3.1 Available VOC Emission Control Options

Although pneumatic controllers have relatively small emissions individually, due to the large population of these devices the cumulative VOC emissions for the industry are significant. We are not aware of any add-on controls that are or can be used to reduce VOC emissions from gas-driven pneumatic controllers. The following sections provide a summary of options for reducing VOC emissions from pneumatic controllers including: (1) replacing high bleed controllers with low bleed controllers or zero bleed controllers, (2) driving controllers with instrument air rather than natural gas, using non-gas-driven controllers, and (3) enhanced maintenance.

Sections 6.3.1.1 and 6.3.1.2 discuss the control of VOC emissions by replacing a high bleed device with a low bleed device, and driving controllers with instrument air rather than natural gas, including the estimated costs of these options. Given applicability, efficiency and the expected costs, other options (i.e., mechanical controls and enhanced maintenance) are only briefly discussed in sections 6.3.1.3 and 6.3.1.4.

6.3.1.1 Install a Low bleed Device in Place of a High bleed Device

Description

As discussed previously, low bleed controllers generally provide the same operational function as a high bleed controller, but have lower continuous bleed emissions.

Control Effectiveness

We estimate on average that 1.41 tons of VOC will be reduced annually per device in the production segment from installing a low bleed device in place of a high bleed device. There are certain situations in which replacing and retrofitting devices are not feasible, such as instances where a minimal response time is needed, cases where large valves require a high bleed rate to actuate, or a safety isolation valve is involved. Based on criteria provided by the Natural Gas STAR Program, we assumed about 80 percent of high bleed devices can be replaced with low bleed devices throughout the production segment.

Applicability of low bleed controllers may depend on the function carried out by the controller. Low bleed pneumatic controllers may not be applicable for replacement of high bleed devices because a process condition may require a fast or precise control response minimize

deviation from the desired set point. A slower acting low bleed controller could potentially result in damage to equipment and/or become a safety issue because it may not be able to respond as quickly as a high bleed controller. An example of this is a compressor where pneumatic controllers may monitor the suction and discharge pressure and actuate a recycle when one or the other is out of the specified target range. Other scenarios for fast and precise control include transient (non-steady state) situations where a gas flow rate may fluctuate widely or unpredictably. This situation requires a responsive high bleed device to ensure that the gas flow can be controlled in all situations. Temperature and level controllers are typically present in control situations that are not prone to fluctuate as widely or where the fluctuation can be readily and safely accommodated by the equipment. Therefore, such processes can typically accommodate control from a low bleed device, which is slower-acting and less precise.

Cost Impacts

Costs were based on vendor research as a result of updating and expanding upon the information given in the appendices of the Natural Gas STAR Lessons Learned document on pneumatic controllers.[74] As Table 6-3 indicates, the average cost for a low bleed pneumatic controller is $2,698, while the average cost for a high bleed pneumatic controller is $2,471.[75] In order to analyze cost impacts, the average cost to install a new low bleed pneumatic controller was annualized for a 15 year period using a 7 percent interest rate. This equates to annualized costs of around $271 per low bleed device for the production segment.

Table 6-3. Cost Projections for Representative Pneumatic Controllers[a]

Device	Minimum Cost ($2012)	Maximum Cost ($2012)	Average Cost ($2012)
High Bleed Controller	$387	$7,398	$2,471
Low Bleed Controller	$554	$9,356	$2,698

[a.] 2011 NSPS TSD 2008 dollars converted to 2012 dollars using the Federal Reserve Economic Data GDP Price Deflater (5.69 percent). During the development of the 2012 NSPS, major pneumatic controller vendors were surveyed for costs, emission rates, and any other pertinent information.

[74] U.S. Environmental Protection Agency. Lessons Learned from Natural Gas STAR Partners. *Options for Reducing Methane Emissions from Pneumatic Devices in the Natural Gas Industry***.** Office of Air and Radiation: Natural Gas STAR Program. Washington, DC. October 2006.

[75] Costs are estimated in 2012 U.S. Dollars.

Monetary savings associated with retaining natural gas that would have been emitted was estimated based on a natural gas value of $4.00 per Mcf.[76] The use of a low bleed pneumatic controller is estimated to reduce methane emissions by 5.1 tpy (245 Mcf/yr) (using the conversion factor of 0.0208 tons methane per 1 Mcf) over the use of a high bleed pneumatic controller. Assuming natural gas in the production segment is 82.8 percent methane by volume, this equals 296 Mcf natural gas recovered per year. Therefore, the value of recovered natural gas from one pneumatic controller in the production segment is approximately $1,184. Table 6-4 presents the estimated cost of control per ton of VOC reduced for replacing a high bleed pneumatic controller with a new low bleed pneumatic controller in the production segment of the oil and natural gas industry.

Table 6-4. VOC Cost of Control for Replacing an Existing High Bleed Pneumatic Controller with a New Low Bleed Pneumatic Controller

Segment	Average Capital Costs per Unit ($2012)[a,c]	Total Annual Costs per Unit ($2012/yr)[b,c]		VOC Cost of Control ($2012/ton)[c]	
		Without Savings	With Savings	Without Savings	With Savings
Oil and Natural Gas Production	$2,698	$296	($886)	$210	($627)

[a.] Average capital costs of a low bleed device as summarized in Table 6-3.
[b.] Annualized costs assume a 7 percent interest rate over a 15 year equipment lifetime.
[c.] Cost data from the 2011 TSD converted to 2012 dollars using the Federal Reserve Economic Data GDP Price Deflater (5.69 percent).

6.3.1.2 Instrument Air Systems

Description

The major components of an instrument air conversion project include the compressor, power source, dehydrator, and volume tank. The following is a description of each component as described in the Natural Gas STAR document, "Lessons Learned: Convert Gas Pneumatic Controls to Instrument Air":[77]

(1) Compressors used for instrument air delivery are available in various types and sizes, from centrifugal (rotary screw) compressors to reciprocating piston (positive

[76] U.S. Energy Information Administration. *Annual U.S. Natural Gas Wellhead Price. Energy Information Administration. Natural Gas Navigator*. Retrieved online on 12 Dec 2010 at http://www.eia.doe.gov/dnav/ng/hist/n9190us3a.htm
[77] U.S. Environmental Protection Agency. Lessons Learned from Natural Gas STAR Partners. *Convert Gas Pneumatic Controls to Instrument Air*. Office of Air and Radiation: Natural Gas STAR Program. Washington, DC. 2006.

displacement) types. The size of the compressor depends on the size of the facility, the number of control devices operated by the system, and the typical bleed rates of these devices. The compressor is usually driven by an electric motor that turns on and off, depending on the pressure in the volume tank. For reliability, a full spare compressor is normally installed. A minimum amount of electrical service is required to power the compressors.

(2) A critical component of the instrument air control system is the power source required to operate the compressor. Since high-pressure natural gas is abundant and readily available, natural gas pneumatic systems can run uninterrupted on a 24-hour, 7-day per week schedule. The reliability of an instrument air system, however, depends on the reliability of the compressor and electric power supply. Most large natural gas plants have either an existing electric power supply or have their own power generation system. For smaller facilities and in remote locations, however, a reliable source of electric power can be difficult to assure. In some instances, solar-powered battery-operated air compressors can be cost effective for remote locations, which reduce both VOC emissions and energy consumption. Small natural gas-driven fuel cells are also being developed.

(3) Dehydrators, or air dryers, are also an integral part of the instrument air compressor system. Water vapor present in atmospheric air condenses when the air is pressurized and cooled, and can cause a number of problems to these systems, including corrosion of the instrument parts and blockage of instrument air piping and controller orifices.

(4) The volume tank holds enough air to allow the pneumatic control system to have an uninterrupted supply of high pressure air without having to run the air compressor continuously. The volume tank allows a large withdrawal of compressed air for a short time, such as for a motor starter, pneumatic pump, or pneumatic tools without affecting the process control functions.

Compressed air may be substituted for natural gas in pneumatic systems without altering any of the parts of the pneumatic controller. The use of instrument air eliminates natural gas emissions from natural gas-driven pneumatic controllers. All other parts of a natural gas pneumatic system will operate the same way with instrument air as they do with natural gas. The conversion of natural gas pneumatic controllers to instrument air systems is applicable to all natural gas facilities with electrical service available. Figure 6-1 illustrates a diagram of a natural gas pneumatic control system.[78] Figure 6-2 illustrates a diagram of a compressed instrument air control system.

Control Effectiveness

The use of instrument air eliminates natural gas emissions from the pneumatic controllers; however, the system is only applicable in locations with access to a sufficient and consistent supply of electrical power. Instrument air systems are also usually installed at facilities where there is access to high Btu gas, a high concentration of pneumatic control valves and the presence of an operator that can ensure the system is properly functioning.[79]

For natural gas processing plants, we believe that instrument air systems are typically used to power pneumatic controllers and that any natural gas-driven pneumatic controllers in use are required for safety and functional reasons. The use of an instrument air system would reduce VOC emissions from a natural gas-driven pneumatic controller by 100 percent.

Cost Impacts

Instrument air conversion requires additional equipment to properly compress and control the pressurized air. The size of the compressor depends on the number of control loops present at a location. A control loop consists of one pneumatic controller and one control valve. The volume of compressed air supply for the pneumatic system is equivalent to the volume of gas used to run the existing instrumentation, adjusted for air losses during the drying process. The current volume of gas usage can be determined by direct metering if a meter is installed. Otherwise, an alternative rule of thumb for sizing instrument air systems is one cubic foot per minute (cfm) of instrument air for each control loop. As the system is powered by electric compressors, the system requires a constant source of electrical power and a back-up system to

[78] U.S. Environmental Protection Agency. Lessons Learned from Natural Gas STAR Partners. *Convert Gas Pneumatic Controls to Instrument Air*. Office of Air and Radiation: Natural Gas STAR Program. Washington, DC. 2006.
[79] Ibid.

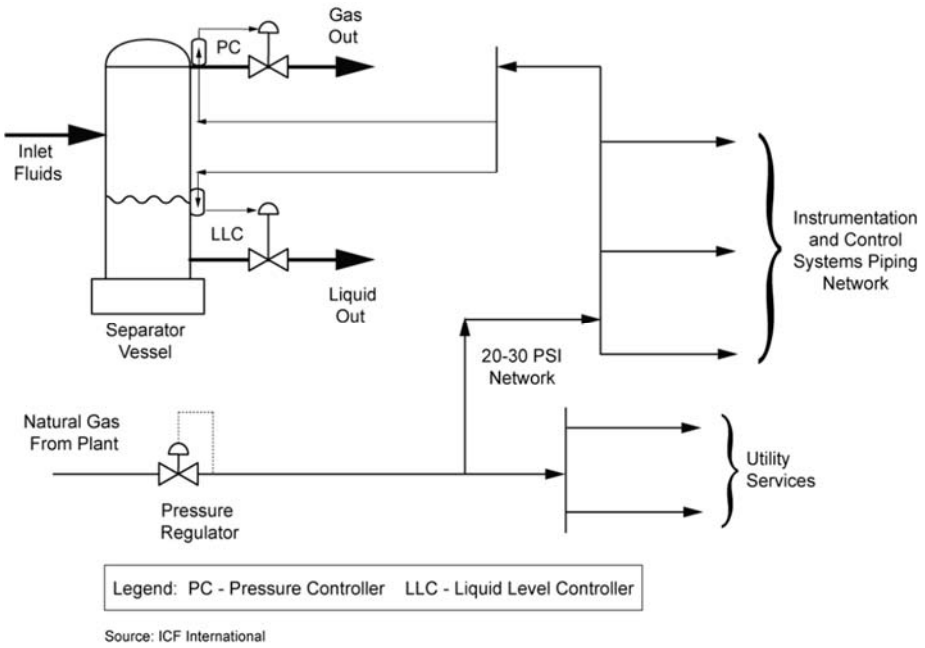

Figure 6-1. Natural Gas Pneumatic Control System

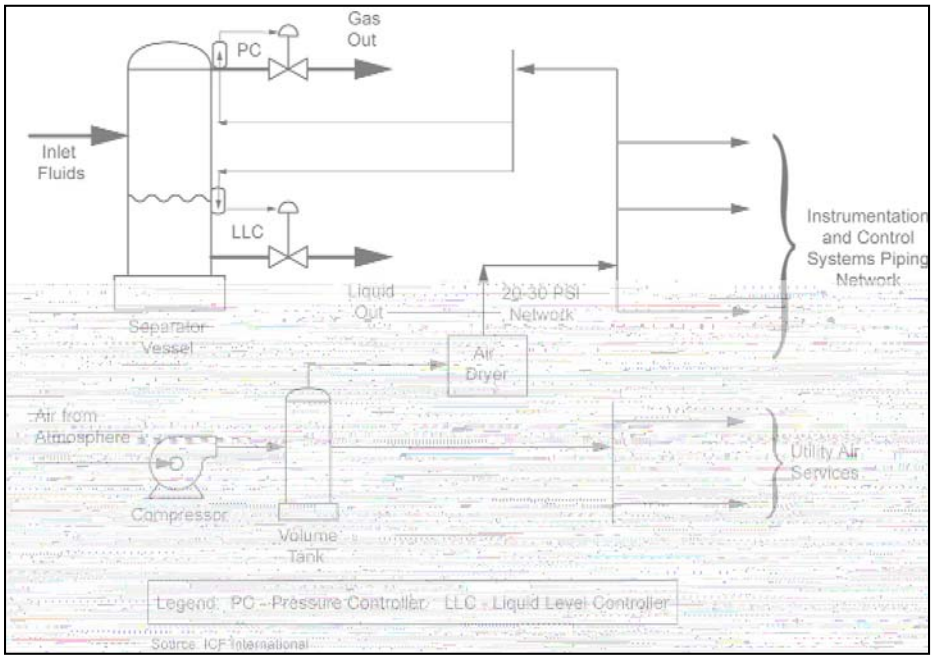

Figure 6-2. Compressed Instrument Air Control System

operate the controllers in the event of interruption of the electrical supply. Table 6-5 outlines three different sized instrument air systems including the compressor power requirements, the flow rate provided from the compressor, and the associated number of control loops.

Table 6-5. Compressor Power Requirements and Costs for Representative Instrument Air Systems[a]

Compressor Power Requirements[b]			Flow Rate (cfm)	Control Loops (Loops/Compressor)	Power Costs ($/yr)
Size of Unit	Hp	kW			
Small	10	13.3	30	15	$7,758
Medium	30	40	125	63	$23,332
Large	75	100	350	175	$58,329

a. Based on rules of thumb stated in the Natural Gas STAR document, *Lessons Learned: Convert Gas Pneumatic Controls to Instrument Air*. Natural Gas STAR Program. Washington, DC. 2006.
b. Power is based on the operation of two compressors operating in parallel (each assumed to be operating at full capacity 50 percent of the year).

The primary costs associated with conversion to instrument air systems are the initial capital expenditures for installing compressors and the related equipment and operating costs for electrical energy to power the compressor motor. This equipment includes a compressor, a power source, a dehydrator, gas supply piping, control instruments, valve actuators and a storage vessel. The total cost, including installation and labor, of three representative sizes of compressors were evaluated based on assumptions found in the Natural Gas STAR document, "Lessons Learned: Convert Gas Pneumatic Controls to Instrument Air" and are summarized in Table 6-6.[80]

For new natural gas processing plants, the cost-effectiveness of the three representative instrument air system sizes was evaluated in the 2015 NSPS TSD based on the emissions mitigated from the number of control loops the system can provide and not on a per device basis. This approach was chosen because we assume new processing plants will need to provide instrumentation of multiple control loops and size the instrument air system accordingly. Table 6-7 summarizes the natural gas processing segment cost of control per ton of VOC reduced for three sizes of representative instrument air systems.

For existing natural gas processing plants, it is our understanding that these plants have already upgraded to instrument air unless the function has a specific need for a high bleed pneumatic controller, which would most likely be safety related. The cost of converting the

[80] Ibid.

Table 6-6. Estimated Capital and Annual Costs of Representative Instrument Air Systems ($2012)

Instrument Air System Size	Compressor	Tank	Air Dryer	Total Capital Costs[a]	Annualized Capital Costs[b]	Labor Cost	Total Annual Costs[c]	Annualized Costs of Instrument Air System
Small	$3,987	$797	$2,391	$17,938	$2,553	$1,410	$9,168	$11,721
Medium	$19,928	$2,391	$7,173	$77,716	$11,065	$4,580	$27,911	$38,976
Large	$35,071	$4,783	$15,941	$143,476	$20,428	$6,340	$64,669	$85,097

a. Total Capital Cost includes the cost for two compressors, two tanks, an air dryer and installation. Installation costs are assumed to be equal to 1.5 times the cost of capital. Equipment costs were derived from the 2012 NSPS TSD.
b. These costs have been converted to 2012 dollars (from 2008 dollars) using the Federal Reserve Economic Data GDP Price Deflater (Change in GDP: Implicit Price Deflator from 2008 to 2012 (5.69 percent).[81]
c. The annualized costs were estimated using a 7 percent interest rate and 10 year equipment life. Annual costs include the cost of electrical power as listed in Table 6-5 and labor.

Table 6-7. Cost of Control of Representative Instrument Air Systems in the Natural Gas Processing Segment ($2012)

System Size	Number of Control Loops	VOC Annual Emission Reduction (tpy)[a]	Value of Product Recovered ($2012/year)[b]	Annualized Costs of System		VOC Cost of Control ($2012/ton)	
				Without Savings	With Savings	Without Savings	With Savings
Small	15	4.18	$3,485	$11,721	$8,236	$2,807	$1,970
Medium	63	17.5	$14,592	$38,976	$24,385	$2,223	$1,393
Large	175	48.7	$40,606	$85,097	$44,490	$1,747	$914

a. Based on the emissions mitigated from the entire system, which includes multiple control loops.
b. Value of recovered product assumes natural gas processing is 82.9 percent methane by volume. A natural gas price of $4 per Mcf was assumed.

[81] U.S. Bureau of Economic Analysis. *Gross Domestic Product: Implicit Price Deflator (GDPDEF]*, retrieved from FRED, Federal Reserve Bank of St. Louis. https://research.stlouisfed.org/fred2/series/GDPDEF/ March, 26, 2015.

pneumatic controllers to instrument air includes the capital costs of $2,000 for the ductwork and annual costs of $285 (assuming a 10 year equipment life at 7% interest). The VOC cost of control for converting pneumatic controllers to instrument air for processing plants that already have instrument air ranges from $6 to $68 per ton of VOC removed, depending on the size of the instrument air system.

For natural gas processing, the cost of control of the three representative instrument air systems was evaluated based on the emissions mitigated from the number of control loops the system can provide and not on a per controller basis. This approach was chosen because we assume new processing plants will need to provide instrumentation for multiple control loops and size the instrument air system accordingly. We also assume that existing processing plants have already upgraded to instrument air unless the function has a specific need for a high bleed pneumatic controller, which would most likely be safety related. Table 6-7 summarizes the natural gas processing segment cost of control per ton of VOC reduced for three sizes of representative instrument air systems

6.3.1.3 Electrically Powered Systems in Place of Bleed Devices

Description

Mechanical controls have been widely used in the oil and natural gas industry. They operate using a combination of levers, hand wheels, springs and flow channels with the most common mechanical control device being a liquid-level float to the drain valve position with mechanical linkages.[82] Another device that is increasing in use is electrically powered controls. Small electrical motors (including solar powered) have been used to operate valves and have no VOC emissions. Solar powered control systems are driven by solar power cells that actuate mechanical devices using electric power. As such, solar cells require some type of back-up power or storage to ensure reliability.

[82] U.S. Environmental Protection Agency. Lessons Learned from Natural Gas STAR Partners. *Options for Reducing Methane Emissions from Pneumatic Devices in the Natural Gas Industry.* Office of Air and Radiation: Natural Gas STAR Program. Washington, DC. October 2006.

Control Effectiveness[83]

Application of mechanical controls is limited because the control must be located in close proximity to the process measurement. Mechanical systems may have difficulty handling larger flow fluctuations. Electrically powered valves are only reliable with a constant supply of electricity. These controllers can achieve a 100 percent reduction in VOC emissions where applicable.

Cost Impacts

Depending on supply of power, mechanical and solar power system costs can range from below $1,000 to $10,000 for an entire system.[84]

6.3.1.4 Enhanced Maintenance of Natural Gas-Driven Pneumatic Controllers

Manufacturers of pneumatic controllers indicate that emissions in the field can be higher than the reported gas consumption due to operating conditions, age, and wear of the device.[85] Examples of circumstances or factors that can contribute to this increase include:[86,87]

(1) Nozzle corrosion resulting in more flow through a larger opening;
(2) Broken or worn diaphragms, springs (e.g., spring broken that holds the supply pilot-plug on its seat), bellows, fittings (e.g., leaking tubing/tubing-fittings) and nozzles;
(3) Corrosives in the gas leading to erosion and corrosion of control loop internals;
(4) Improper installation;
(5) Lack of maintenance (maintenance includes replacement of the filter used to remove debris from the supply gas and replacement of O-rings and/or seals);
(6) Lack of calibration of the controller or adjustment of the distance between the flapper and nozzle;
(7) Foreign material lodged in the pilot seat;

[83] U.S. Environmental Protection Agency. Lessons Learned from Natural Gas STAR Partners. *Convert Gas Pneumatic Controls to Instrument Air*. Office of Air and Radiation: Natural Gas STAR Program. Washington, DC. October 2006.
[84] U.S. Environmental Protection Agency. Lessons Learned from Natural Gas STAR Partners. *Options for Reducing Methane Emissions from Pneumatic Devices in the Natural Gas Industry.* Office of Air and Radiation: Natural Gas STAR Program. Washington, DC. October 2006.
[85] Ibid.
[86] Ibid.
[87] American Petroleum Institute (API). *Pneumatic Controllers*. Webinar Prepared and Presented to the U.S. Environmental Protection Agency. March 25, 2014.

(8) Debris/deposits on vent pilot plug. Material on the vent pilot can allow the controller to exhaust gas during the activation cycle;

(9) Debris/deposits on the supply pilot plug. Material on the supply pilot can cause the introduction of gas while the vent is open; or

(10) Wear in the seal seat.

The EPA prepared a white paper titled "Oil and Natural Gas Sector Pneumatic Devices" in 2014, requesting specific comment on available emissions data for pneumatic devices. One of the comments received regarding data presented in "Measurements of Methane Emissions at Natural Gas Production Sites in the United States"[88] was that the data set reported was dominated by extreme values. The commenter noted that the highest emitting controllers are simply controllers emitting at a large rate, regardless of their service or design type. These controllers can have high emissions because of factors, other than design, related to maintenance, malfunction, or defect.[89]

Maintenance of pneumatics can correct many of these problems and can be an effective method for reducing emissions. Cleaning and tuning, in addition to repairing leaking gaskets, tubing fittings, and seals, can save 5 to 10 scfh per device. Eliminating unnecessary valve positioners can save up to 18 scfh per device.[90]

6.3.2 Existing Federal, State and Local Regulations

6.3.2.1 Federal Regulations that Specifically Require Control of VOC Emissions

Under the 2012 NSPS, new or modified continuous bleed natural gas-driven pneumatic controllers at natural gas processing plants are subject to a VOC emission limit of zero (equivalent to non-natural gas-driven pneumatic controllers). Continuous bleed natural gas-driven pneumatic controllers in the production segment must have a bleed rate of 6 scfh or less.

---

[88] U.S. Environmental Protection Agency. *Oil and Natural Gas Sector Pneumatic Devices*. *Report for Oil and Natural Gas Sector Pneumatic Devices Review Panel* Office of Air Quality Planning and Standards (OAQPS). April 2014. Available at http://www.epa.gov/airquality/oilandgas/2014papers/20140415pneumatic.pdf.

[89] Allen, David. Comments Provided to the EPA on *Oil and Natural Gas Sector Pneumatic Devices-Peer Review Document*. University of Texas at Austin. June 2014.

[90] U.S. Environmental Protection Agency. Lessons Learned from Natural Gas STAR Partners. *Options for Reducing Methane Emissions from Pneumatic Devices in the Natural Gas Industry*. Office of Air and Radiation: Natural Gas STAR Program. Washington, DC. October 2006.

6.3.2.2 State and Local Regulations that Specifically Require Control of VOC Emissions

States may have permitting restrictions on VOC emissions that apply to an emissions source as a result of an operating, NSR NA, or PSD permit (e.g., on a case-by-case basis) requirements based on air quality maintenance or improvement goals of an area. Permits specify what construction is allowed, what emission limits must be met, and often how the source must be operated. To assure that sources follow the permit requirements, permits also contain monitoring, recordkeeping, and reporting requirements

For pneumatic controllers, Colorado and Wyoming have existing control requirements similar to those required under the 2012 NSPS. Other states have permitting and registration rules for controlling fugitive VOC emissions (which would include non-bleed emissions from pneumatic controllers).

Colorado requires that no- or low bleed pneumatic controllers with a bleed rate of 6 scfh or less be installed for all new and existing applications (unless approved for use due to safety and/or process purposes) statewide (Regulation 7, XVIII.C.2). Where technically and economically feasible, Colorado requires no-bleed pneumatic controllers at facilities that are connected to the electric grid and using electricity to power equipment.

Wyoming requires the installation of low- or no-bleed pneumatic controllers with a bleed rate of 6 scfh or less at all new facilities. Upon modification of facilities, new pneumatic controllers must be low- or no-bleed and existing controllers must be replaced with no- or low bleed controllers (at well site facilities only and not at natural gas processing plants).

Although some local rule requirements do not specifically require the control of VOC emissions from pneumatic controllers, local permit requirements (such as those required by the Bay Area Air Quality Management District) may require that a permit to operate applicant provide the number of high bleed and low bleed pneumatic devices in a permit application. Under some situations where facilities use high bleed devices, the permitting authority might require an owner or operator to provide device-specific bleed rates and supporting documentation for each high bleed device. In cases where high bleed devices must be used, the

permitting authority may require that the facility conduct fugitive monitoring and/or implement control requirements under conditions of their permit to operate[91].

6.4 Recommended RACT Level of Control

Sections 6.4.1 and 6.4.2 present the recommended RACT level of control/impacts for continuous bleed natural gas-driven pneumatic controllers located at natural gas processing plants and continuous bleed natural gas-driven pneumatic controllers located from the wellhead to the natural gas processing plant or point of custody transfer to an oil pipeline.

6.4.1 Continuous Bleed Natural Gas-Driven Pneumatic Controllers Located at a Natural Gas Processing Plant

Based on our evaluation of available data obtained in the development of the 2012 NSPS, peer review comments received on the "Oil and Natural Gas Sector Pneumatic Devices" white paper, and existing regulations that control VOC emissions from pneumatic controllers, we recommend that VOC emissions from an individual continuous bleed natural gas-driven pneumatic controller located at a natural gas processing plant be controlled by RACT. As noted in section 6.3.2, both Colorado and Wyoming require either low- or no-bleed controllers (where a high bleed controller is defined as emitting at least 6 scfh); and the 2012 NSPS requires that new and modified individual continuous bleed pneumatic controllers at natural gas processing plants have a natural gas bleed rate of zero scfh (unless there are functional needs, including but not limited to response time, safety and positive actuation, requiring a bleed rate greater than zero scfh). For existing individual continuous bleed pneumatic controllers at natural gas processing plants, our RACT recommendation is that controllers have a natural gas bleed rate of zero scfh (unless there are functional needs, including but not limited to response time, safety and positive actuation, requiring a bleed rate greater than zero scfh). Our rationale for selecting a natural gas bleed rate of zero scfh (with functional and safety exceptions) for our recommended RACT is based on the ability of most natural gas processing plants to install and utilize an instrument air system. As discussed in section 6.3.1.2 of this chapter, by using an instrument air system, compressed air may be substituted for natural gas in pneumatic systems without altering any of the parts of the pneumatic controller. Therefore, the use of instrument air eliminates

[91] Cheng, Jimmy. *Permit Handbook. Chapter 3.5 Natural Gas Facilities and Crude Oil Facilities.* Bay Area Air Quality Management District. September 16, 2013.

natural gas and VOC emissions from pneumatic controllers and supports a natural gas bleed rate of zero scfh.

In order to meet an emission limit of zero scfh, natural gas processing plants would likely need to use an instrument air system. The use of instrument air eliminates natural gas and VOC emissions from natural gas-driven pneumatic controllers. We believe that most natural gas processing plants already meet the recommended RACT level of control by driving controllers with instrument air or other non-gas-driven controls unless there is a specific need for a high bleed pneumatic controller. Nonetheless, for those natural gas processing plants that do not have an installed instrument air system, the cost of control of installing three representative instrument air systems was evaluated under the 2012 NSPS based on the emissions mitigated from the number of control loops the system can provide (see section 6.3.1.2 of this chapter). Based on this analysis, the cost of this option was considered to be reasonable for natural gas processing plants (see Table 6-7 of section 6.3.1.2 of this chapter). The cost of control per ton of VOC reduced was estimated at $1,700 - $2,800 without savings and $910 - $2,000 with savings. For determining potential cost impacts, a major assumption made was that processing plants are constructed at a location with sufficient electrical service to power the instrument air compression system.

In summary, we recommend the following RACT for each continuous bleed natural gas-driven pneumatic controller located at a natural gas processing plant:

> <u>RACT for Each Continuous Bleed Natural Gas-Driven Pneumatic Controller Located at a Natural Gas Processing Plant</u>:[92] Each continuous bleed natural gas driven pneumatic controller located at a natural gas processing plant must have a natural gas bleed rate of zero scfh (unless there are functional needs, including but not limited to response time, safety and positive actuation, requiring a bleed rate greater than zero scfh).

[92] In the NSPS, we excluded from the NSPS affected facility status non-natural gas-driven pneumatic controllers located at natural gas processing plants. Natural gas-driven controllers exempt from the zero VOC emission standard under the functional needs exclusion would still be affected facilities and would have certain tagging, recordkeeping and reporting requirements.

6.4.2 Continuous Bleed Natural Gas-Driven Pneumatic Controllers Located from the Wellhead to the Natural Gas Processing Plant or Point of Custody Transfer to an Oil Pipeline

Based on our evaluation of available data obtained in the development of the 2012 NSPS, peer review comments received on the "Oil and Natural Gas Sector Pneumatic Devices" white paper, and existing regulations that control VOC emissions from pneumatic controllers, we recommending a natural gas bleed rate less than or equal to 6 scfh with limited exceptions described below as the RACT for controlling VOC emissions from continuous bleed natural gas-driven pneumatic controllers located from the wellhead to the natural gas processing plant or point of custody transfer to an oil pipeline.

As indicated in section 6.2.2 of this chapter, low bleed pneumatic controllers can emit up to 6 scfh. Both Colorado and Wyoming conditionally require either low- or no-bleed controllers (where a high bleed controller is defined as emitting greater than 6 scfh); and the 2012 NSPS requires that new and modified individual continuous bleed pneumatic controllers have a bleed rate of 6 scfh or less (unless there are functional needs, including but not limited to response time, safety and positive actuation, requiring a bleed rate greater than 6 scfh). For purposes of this guideline, and consistent with the definition of high bleed controller used for the 2012 NSPS and both the Wyoming and Colorado state regulations, a high bleed pneumatic device is defined as emitting greater than 6 scfh to the atmosphere.

Although both Wyoming and Colorado specifically require low bleed or no-bleed pneumatic controllers in place of high bleed controllers (where technically and economically feasible), we are recommending a RACT emission limit of 6 scfh (unless there are functional needs, including but not limited to response time, safety and positive actuation, requiring a bleed rate greater than 6 scfh) apply to each continuous bleed pneumatic controller. This approach allows flexibility in how a source chooses to limit VOC emissions from an applicable individual pneumatic controller and acknowledges that there may be circumstances where it is not practical to meet a 6 scfh limit. By requiring a limit be met, facilities have the option of controlling emissions by one or more options presented in section 6.3.1 of this chapter (e.g., replacing a high bleed device with a low bleed device and implement enhanced monitoring to mitigate increased VOC emissions from poor maintenance/poor operation) depending on site-specific circumstances. We are including this flexibility in our recommended RACT to address the varied

control options and applicability issues (e.g., instrument air systems require access to electrical power or a back-up pneumatic controller and access to electric power or back up pneumatic controllers may not be available in remote locations) presented in section 6.3.1 of this chapter.

Although facilities would have flexibility in how they meet the recommended RACT level of control, by establishing an emission limit equal to the design bleed rate for a low bleed device (6 scfh), we believe that most facilities would likely replace high bleed controllers with low bleed controllers (it is assumed about 80 percent of high bleed devices can be replaced with low bleed devices).[93] For the production segment, we estimated that, on average, 1.41 tons of VOC would be reduced annually per device in the production segment from installing a low bleed device in place of a high bleed device.

As presented in section 6.3.1.1 of this chapter, the cost of replacing a high bleed device with a new low bleed device is on the order of $2,698 per device, and the cost of control in the production segment is estimated to be $210 per ton of VOC emissions without savings. Considering the cost savings of gas recovered from installing a low bleed device in place of a high bleed device, it is estimated that there would be an overall net savings.

In summary, we recommend the following RACT for each single continuous bleed natural gas-driven pneumatic controller located from the wellhead to the natural gas processing plant or point of custody transfer to an oil pipeline:

> <u>RACT for Each Single Continuous Bleed Natural Gas-Driven Pneumatic Controller Located from the Wellhead to the Natural Gas Processing Plant or Point of Custody Transfer to an Oil Pipeline</u>: Each pneumatic controller, which is a single continuous bleed natural gas-driven pneumatic controller[94] must have a natural gas bleed rate less than or equal to 6 scfh (unless there are functional needs, including but not limited to response time, safety and positive actuation, requiring a bleed rate greater than 6 scfh).

[93] U.S. Environmental Protection Agency. Lessons Learned from Natural Gas STAR Partners. *Options for Reducing Methane Emissions from Pneumatic Devices in the Natural Gas Industry*. Office of Air and Radiation: Natural Gas STAR Program. Washington, DC. October 2006.

[94] In the NSPS, we excluded from NSPS affected facility status continuous bleed natural gas-driven pneumatic controllers with a bleed rate not greater than 6 scfh (low bleed controllers) located in the production segment. Continuous bleed natural gas-driven controllers exempt from the 6 scfh bleed rate emission standard under the functional needs exclusion would still be affected facilities and would have certain tagging, recordkeeping and reporting requirements.

6.5 Factors to Consider in Developing Pneumatic Controller Compliance Procedures

6.5.1 Oil and Natural Gas Production (Individual Continuous Bleed Pneumatic Controller with a Natural Gas Bleed Rate Greater than 6 scf Located from the Wellhead to the Natural Gas Processing Plant or Point of Custody Transfer to an Oil Pipeline)

To ensure that each continuous bleed natural gas-driven pneumatic controller located from the wellhead to the natural gas processing plant or point of custody transfer to an oil pipeline are operated with a natural gas bleed rate less than or equal to 6 scfh (the recommended RACT level of control), we recommend that regulating agencies specify operating, recordkeeping and reporting requirements to document compliance. We also recommend that regulating agencies require that each pneumatic controller be tagged with the month and year of installation and identification information that allows traceability to manufacturer's documentation.

We suggest that regulatory agencies require owners and operators of continuous bleed natural gas-driven pneumatic controllers maintain records that (1) document the location and manufacturer's specifications of each pneumatic controller; (2) if applicable, provides a demonstration as to why the use of a pneumatic controller with a natural gas bleed rate greater than 6 scfh is required (the recommended RACT level of control); and (3) document deviations in cases where a pneumatic controller was not operated in compliance with RACT.

We also recommend that regulatory agencies require owners and operators to submit annual reports that includes (1) if applicable, documentation that the use of a pneumatic controller with a natural gas bleed rate greater than 6 standard cubic feet per hour is required and the reasons why; and (2) the records of deviations that occurred during the reporting period.

The appendix to this document presents example model rule language that incorporates compliance elements recommended in this section that states may choose to use in whole or in part when implementing RACT.

6.5.2 Natural Gas Processing Segment (Individual Continuous Bleed Natural Gas-Driven Pneumatic Controller Located at a Natural Gas Processing Plant)

To ensure each continuous bleed natural gas-driven pneumatic controller at natural gas processing plants is operated with a natural gas bleed rate of zero (the recommended RACT level of control), we suggest that regulatory agencies specify operating, recordkeeping and reporting requirements to document compliance. We also suggest that regulatory agencies require that each pneumatic controller be tagged with the month and year of installation and identification information that allows traceability to manufacturer's documentation.

We recommend that regulatory agencies require owners and operators of pneumatic controllers maintain records that (1) document the location and manufacturer's specifications of each pneumatic controller; (2) document that the natural gas bleed rate is zero; and (3) document deviations in cases where a pneumatic controller was not operated in compliance with RACT.

We also recommend that regulatory agencies require owners and operators to submit annual reports that include the records of deviations that occurred during the reporting period.

The appendix to this document presents example model rule language that incorporates compliance elements recommended in this section that states may choose to use in whole or in part when implementing RACT.

7.0 PNEUMATIC PUMPS

The oil and natural gas industry uses a variety of pneumatic gas-driven pumps where there is no reliable electrical power to "control processing problems and protect equipment."[95] Pneumatic pumps are "small positive displacement, reciprocating units used throughout the oil and natural gas industry to inject precise amounts of chemicals into process streams or for freeze protection glycol circulation."[96] Most chemical injection pumps fall into two main types: (1) diaphragm pumps, generally used for heat tracing or (2) plunger/piston, generally used for chemical and methanol injection. Pneumatic pumps driven by natural gas emit natural gas, which contains VOC. Other types of pneumatic pumps may be driven by gases other than natural gas and, therefore, do not emit VOC. The focus of this guideline is natural gas-driven pneumatic pumps. This chapter provides a description of pneumatic pumps that are used in the oil and natural gas industry, including their function and associated emissions. This chapter also provides control techniques used to reduce VOC emissions from pneumatic pumps, along with costs and emission reductions. Finally, this chapter provides a discussion of our recommended RACT and the associated VOC emission reductions and cost impacts for pneumatic pumps.

7.1 Applicability

For the purposes of this guideline, a pneumatic pump is a positive displacement reciprocating unit used for injecting precise amounts of chemicals into a process stream or for glycol circulation. The pneumatic pump may use natural gas or another gas to drive the pump. The emissions and emissions control discussed herein would apply to natural gas-driven chemical/methanol and diaphragm pumps located at natural gas processing plants, and natural gas-driven chemical/methanol and diaphragm pumps located from the wellhead to the point of custody transfer to the natural gas transmission and storage segment.

---

[95] U.S. Environmental Protection Agency/GRI. *Methane Emissions from the Natural Gas Industry, Vol. 13: Chemical Injection Pumps*. EPA-600/R-96-080b. June 1996.

[96] U.S. Environmental Protection Agency. Lessons Learned from Natural Gas STAR Partners. *Options for Reducing Methane Emissions from Pneumatic Devices in the Natural Gas Industry*. Office of Air and Radiation: Natural Gas STAR Program. Washington, DC. October 2006.

7.2 Process Description and Emission Sources

7.2.1 Process Description

As noted above, pneumatic pumps are "positive displacement, reciprocating units used for injecting precise amounts of chemicals into a process stream or for glycol circulation."[97] Pneumatic pumps often make use of gas pressure where electricity is not readily available.[98] In the production segment, the supply gas is mostly produced natural gas, whereas in the processing segment, the supply gas may be compressed air. For natural gas-driven pneumatic pumps, characteristics that affect VOC emissions include the frequency of operation, the size of the unit, the supply gas pressure, and the inlet natural gas composition.[99]

Pneumatic pumps are generally used for one of three purposes: glycol circulation in dehydrators, hot oil circulation for heat tracing/freeze protection, or chemical injection. Glycol dehydrator pumps may recover energy from the high-pressure rich glycol/gas mixture leaving the absorber and use that energy to pump the low-pressure lean glycol back into the absorber.[100] Diaphragm pumps are commonly used to circulate hot glycol or other heat-transfer fluids in tubing covered with insulation to prevent freezing in pipelines, vessels, and tanks. Chemical injection pumps, i.e., piston/plunger pumps or small diaphragm pumps, inject small amounts of chemicals such as methanol to prevent hydrate formation or corrosion inhibitors into process streams to regulate operations of a plant and protect the equipment.

Pneumatic pumps have two major components, a driver side and a motive side, which operate in the same manner but with different reciprocating mechanisms. Pressurized gas provides energy to the driver side of the pump, which operates a piston or flexible diaphragm to draw fluid into the pump. The motive side of the pump delivers the energy to the fluid being moved in order to discharge the fluid from the pump. The natural gas leaving the exhaust port of

---

[97] U.S. Environmental Protection Agency. Lessons Learned from Natural Gas STAR Partners. *Options for Reducing Methane Emissions from Pneumatic Devices in the Natural Gas Industry*. Office of Air and Radiation: Natural Gas STAR Program. Washington, DC. October 2006.
[98] Ibid.
[99] Ibid.
[100] U.S. Environmental Protection Agency. *Oil and Natural Gas Sector Pneumatic Devices*. *Report for Oil and Natural Gas Sector Pneumatic Devices Review Panel.* Office of Air Quality Planning and Standards (OAQPS). April 2014. Available at http://www.epa.gov/airquality/oilandgas/2014papers/20140415pneumatic.pdf.

the pump is either directly discharged into the atmosphere or is recovered and used as a fuel gas or stripping gas.[101]

Chemical injection pumps are positive displacement, reciprocating units designed to inject precise amounts of chemical into a process stream. Positive displacement pumps work by allowing a fluid to flow into an enclosed cavity from a low-pressure source, trapping the fluid, and then forcing it out into a high-pressure receiver by decreasing the volume of the cavity. A complete reciprocating stroke includes two movements, referred to as an upward motion or suction stroke, and a downward motion or power stroke. During the suction stroke, the chemical is lifted through the suction check valve into the fluid cylinder. The suction check valve is forced open by the suction lift produced by the plunger and the head of the liquid being pumped. Simultaneously, the discharge check valve remains closed, thus allowing the chemical to remain in the fluid chamber. During the power stroke, the plunger assembly is forced downwards, immediately shutting off the suction check valve. Simultaneously, the chemical is displaced, forcing open the discharge check valve and allowing the fluid to be discharged.[102]

Typical chemicals injected in an oil or natural gas field are biocides, demulsifiers, clarifiers, corrosion inhibitors, scale inhibitors, hydrate inhibitors, paraffin dewaxers, surfactants, oxygen scavengers, and H_2S scavengers. These chemicals are normally injected at the wellhead and into gathering lines or at production separation facilities. Since the injection rates are typically small, the pumps are also small. They are often attached to barrels containing the chemical being injected.[103]

Diaphragm pumps are positive displacement pumps, meaning they use contracting and expanding cavities to move fluids. Diaphragm pumps work by flexing the diaphragm out of the displacement chamber. When the diaphragm moves out, the volume of the pump chamber increases and causes the pressure within the chamber to decrease and draw in fluid. The inward stroke has the opposite effect, decreasing the volume and increasing the pressure of the chamber to move out fluid.[104]

---

[101] U.S. Environmental Protection Agency. Lessons Learned from Natural Gas STAR Partners. *Options for Reducing Methane Emissions from Pneumatic Devices in the Natural Gas Industry*. Office of Air and Radiation: Natural Gas STAR Program. Washington, DC. October 2006.
[102] Ibid.
[103] Ibid.
[104] GlobalSpec. *Diaphragm Pumps Information*. Available online - http://www.globalspec.com/learnmore/flow_transfer_control/pumps/diaphragm_pumps.

Not all pneumatic pumps are natural gas-driven. At sites without electrical service sufficient or reliable enough to power an instrument air compressor control system, mechanical or electrically powered pneumatic pumps may be used. Where reliable electrical service is available, sources of power other than pressurized natural gas, such as compressed instrument air may be used. Because these devices are not natural gas-driven, they do not directly release natural gas or VOC emissions. Instrument air systems are feasible only at oil and natural gas industry locations where the devices can be driven by compressed instrument air systems and have electrical service sufficient and reliable enough to power a compressor. This analysis assumes that natural gas processing plants are likely to have electrical service sufficient to power an instrument air system, and that most existing gas processing plants use instrument air instead of natural gas-driven pumps.[105] The application of electrical controls is discussed further in section 7.3 of this chapter.

7.2.2 Emissions Data

7.2.2.1 Summary of Major Studies and Emissions

In the evaluation of the emissions from pneumatic pumps and the potential options available to reduce these emissions, numerous studies were consulted. Table 7-1 lists these references with an indication of the type of relevant information contained in each reference. In addition to these sources, we evaluated the peer reviewer and public comments received on the EPA's white paper, "Oil and Natural Gas Sector Pneumatic Devices."[106]

[105] U.S. Environmental Protection Agency/GRI. *Methane Emissions from the Natural Gas Industry, Vol. 12: Pneumatic Devices*. EPA-600/R-96-080k. June 1996.
[106] U.S. Environmental Protection Agency. *Oil and Natural Gas Sector Pneumatic Devices*. *Report for Oil and Natural Gas Sector Pneumatic Devices Review Panel*. Office of Air Quality Planning and Standards (OAQPS). April 2014. Available at http://www.epa.gov/airquality/oilandgas/2014papers/20140415pneumatic.pdf

Table 7-1. Major Studies Reviewed for Consideration of Emissions and Activity Data

Report Name	Affiliation	Year of Report	Activity Factors	Emissions Data	Control Options
Greenhouse Gas Reporting Program[a]	EPA	2014	Nationwide	X	
Inventory of Greenhouse Gas Emissions and Sinks: 1990-2012[b]	EPA	2014	Nationwide/ Regional	X	
Methane Emissions from the Natural Gas Industry[c]	EPA/GRI	1996	Nationwide	X	
Methane Emissions from the Petroleum Industry[d]	EPA	1999	Nationwide	X	
Natural Gas STAR Program[e]	EPA	2012		X	X

[a.] U.S. Environmental Protection Agency. Greenhouse Gas Emissions Reporting From the Petroleum and Natural Gas Industry: Climate Change Division. Washington, DC. November 2014.
[b] U.S Environmental Protection Agency. Methodology for Estimating CH_4 and CO_2 Emissions from Natural Gas Systems. Greenhouse Gas Inventory: Emission and Sinks 1990-2012. Washington, DC. And U.S Environmental Protection Agency. Methodology for Estimating CH_4 and CO_2 Emissions from Petroleum Systems. Greenhouse Gas Inventory: Emission and Sinks 1990-2012. Washington, DC.
[c.] U.S. Environmental Protection Agency/GRI. *Methane Emissions from the Natural Gas Industry, Vol. 2: Technical Report.* EPA-600/R-96-080b. June 1996; U.S. Environmental Protection Agency/GRI. *Methane Emissions from the Natural Gas Industry, Vol. 3: General Methodology.* EPA-600/R-96-080c. June 1996.
[d.] U.S. Environmental Protection Agency/GRI. *Methane Emissions from the Natural Gas Industry, Vol. 5: Activity Factors.* EPA-600/R-96-080e. June 1996; and U.S. Environmental Protection Agency/GRI. *Methane Emissions from the Natural Gas Industry, Vol. 12: Pneumatic Devices*. EPA-600/R-96-080k. June 1996.
[e.] U.S. Environmental Protection Agency. *Lessons Learned: Options for Reducing Methane Emissions From Pneumatic Devices in the Natural Gas Industry.* Office of Air and Radiation: Natural Gas STAR. Washington, DC. October 2006.

7.2.2.2 Representative Pneumatic Pump Emissions

For this analysis, we consulted information in the appendices of Natural Gas STAR lessons learned documents on pneumatic pumps,[107,108] the GHGRP, the GHG Inventory, and U.S. EPA/GRI Report.[109] The GHGRP and GHG Inventory use emission factors from the U.S. EPA/GRI Report. Similarly, we determined that the best available emission factors for pneumatic pumps are presented in the U.S. EPA/GRI Report.

The basic approach used for this analysis was to first approximate methane emissions from the average pneumatic pump in the production and processing segments and then estimate

[107] U.S. Environmental Protection Agency. Lessons Learned: *Convert Gas Pneumatic Controls to Instrument Air*. Office of Air and Radiation: Natural Gas Star. Washington, DC. October 2006.
[108] U.S. Environmental Protection Agency. Pro Fact Sheet No. 301. *Convert Pneumatics to Mechanical Controls*. Office of Air and Radiation: Natural Gas Star. Washington, DC. September 2004.
[109] Gas Research Institute (GRI)/U.S. Environmental Protection Agency. *Research and Development, Methane Emissions from the Natural Gas Industry, Volume 13: Chemical Injection Pumps.* June 1996 (EPA-600/R -96-080m).

VOC and HAP emissions using the gas composition factors from the 2011 Gas Composition Memorandum. The specific gas composition ratio used for this analysis were 0.278 lbs VOC per pound methane in the production and processing segment. Table 7-2 summarizes the estimated average emission factors for a representative pneumatic pump for the production and processing segments for both methane and VOC.

Table 7-2. Average Emission Estimates per Pneumatic Device

Segment/Pump Type	Emission Factor Methane (scf/day) [a]	Emission Factor Methane (Mcf/yr)[b]	Emission Factor Methane (tpy)[c]	Emission Factor VOC (tpy)[d]
Production				
Diaphragm	446	163	3.46	0.96
Piston	48.9	18	0.38	0.11
Processing				
Small Diaphragm	446	163	3.46	0.96
Medium Diaphragm	446	163	3.46	0.96
Large Diaphragm	446	163	3.46	0.96
Small Piston	48.9	18	0.38	0.11
Medium Piston	48.9	18	0.38	0.11
Large Piston	48.9	18	0.38	0.11

[a.] Data Source: EPA/GRI. Methane Emissions from the Natural Gas Industry, Volume 13: Chemical Injection Pumps. June 1996 (EPA-600/R -96-080m), Sections 5.1 – Diaphragm Pumps and 5.2 – Piston Pumps.
[b.] Assumes 365 days/yr operation in natural gas production and processing.
[c.] Assumes density of methane is 19.26 g/scf.
[d.] Assumes 0.278 VOC content per pound of methane.

7.3 Available Controls and Regulatory Approaches

7.3.1 Available VOC Emission Control Options

Natural gas-driven pneumatic pumps emit VOC emissions as part of their normal operation. Depending on the type of pump and the constraints of the location, companies can utilize a variety of technologies that have been developed over the years. In situations where the replacement of natural gas-driven pumps with electric, solar and instrument air pumps is not feasible, emissions can be captured via a VRU or routed to a combustion device.

Sections 7.3.1.1 and 7.3.1.2 discuss the control of VOC emissions by replacing natural gas-driven pumps with solar pumps and electric pumps. Section 7.3.1.3 discusses the use of an instrument air system to drive the pneumatic pump in order to eliminate VOC emissions. Lastly,

section 7.3.1.4 discusses reducing VOC emissions by routing emissions from the pump to a combustion device, and section 7.3.1.5 discusses capturing VOC emissions using a VRU.

7.3.1.1 Solar Pumps

Description

Solar pumps provide the same functionality as natural gas-driven pumps and can be utilized at remote sites where electricity is not available. However, peer review comments received on the EPA's white paper "Oil and Natural Gas Sector Pneumatic Devices" noted that they predominantly operated solar-powered pneumatic pumps for chemical injection and the pumps failed as early as after two to three cloudy days due to insufficient battery charge.[110] When solar pumps are properly charged, a solar-charged DC pump can handle a range of throughputs up to 100 gallons per day with maximum injection pressure around 3,000 psig and have no VOC emissions. Converting natural gas-driven chemical pumps can reduce methane emissions by an estimated 3.46 tpy per diaphragm pump and 0.38 tpy per piston pump for all segments of the oil and natural gas industry.[111] Based on the gas composition for natural gas in the production segment, we estimate that replacement of a pneumatic pump with a solar-powered pump will reduce VOC emissions by 0.96 tpy per diaphragm pump and 0.11 tpy for a piston pump.

Control Effectiveness

Replacing a gas-driven pump with a solar pump can result in 100 percent reduction in emissions and is feasible in regions where there is sufficient sunlight to power the pump, and backup power is not required. Although, as stated above, solar-powered pumps are capable of pumping up to 100 gallons per day, they are typically used for low volume applications to inject methanol or corrosion inhibitors into a well with typical volumes ranging from 6 to 8 gallons per day. In addition to the low volume pumps, large volume pumps used to replace natural gas-assisted circulation pumps for glycol dehydrators can also be converted to solar.

[110] Reese, Carrie, Environmental Compliance Manager. Comments on the Oil and Natural Gas Sector Pneumatic Devices. Pioneer Natural Resources.
[111] U.S. Environmental Protection Agency. PRO Fact Sheet No. 202. *Convert Natural Gas-Driven Chemical Pumps*. Available online - http://www.epa.gov/gasstar/documents/convertgasdrivenchemicalpumpstoinstrumentair.pdf.

Cost Impacts

The primary costs associated with conversion to solar pumps are the initial capital expenditures. Solar pumps generally have low maintenance costs which are typically lower than natural gas-driven pump maintenance costs. The cost being attributed to the replacement of pneumatic pumps with solar powered pumps includes the capital cost of the pump and its associated operating costs. The operating costs are estimated to be 10 percent of the capital costs. Based on the Natural Gas STAR document, "PRO Fact Sheet: Convert Natural Gas-Driven Chemical Pumps,"[112] the capital (purchase) cost for a solar-powered electric pump is approximately $2,000 with solar panels having a lifespan of 15 years and electric motors lasting 5 years. The total capital costs, including installation and labor is $2,227 (2012 dollars). We estimate there would be no additional annual operating costs for solar pumps above and beyond that of ordinary field personnel duties. Annualized over the life of the pump at a 7-percent discount rate, the annualized costs of replacing a pneumatic pump with a solar pump are $317. In addition, the use of solar pumps will have savings realized from the natural gas not released. We estimate that each diaphragm pump replaced will save 197 Mcf per year of natural gas from being emitted and each piston pump will have a natural gas savings of 22 Mcf per year. The value of the natural gas saved based on $4.00 per Mcf would be $786 per year per diaphragm pump and $87 per year per piston pump.

7.3.1.2 Electric Pumps

Description

Electric pumps provide the same functionality as natural gas-driven pumps, and are only restricted by the use of reliable power. Electric pumps have no VOC emissions, and converting a natural gas-driven pneumatic pump to an electric pump can reduce VOC emissions by an estimated 0.96 tpy per diaphragm pump and 0.11 tpy per piston pump.

Control Effectiveness

Replacing a natural gas-driven pump with an electric pump requires the availability of a consistent and reliable source of electricity. These pumps are, therefore, more common at processing plants or large dehydration facilities that have access to reliable electric power.

[112] U.S. Environmental Protection Agency. PRO Fact Sheet No. 202. *Convert Natural Gas-Driven Chemical Pumps*. Available online - http://www.epa.gov/gasstar/documents/convertgasdrivenchemicalpumpstoinstrumentair.pdf.

Cost Impacts

The primary costs associated with converting natural gas-driven pumps to electric pumps are the initial capital expenditures, installation and ongoing operation and maintenance. Based on the Natural Gas STAR document, "PRO Fact Sheet: Convert Natural Gas-Driven Chemical Pumps"[113] the cost of an electric pump to replace a diaphragm pump is $4,647 and to replace a piston pump is $1,819 in 2012 dollars depending on the horsepower of the unit.[114] The annual operating costs for an electric pump are estimated to be $293. Based on these costs annualized over the life expectancy of the pump at a 7 percent discount rate, the annualized costs for an electric pump to replace a diaphragm pump are $954, and $506 to replace a piston pump. In addition, the use of electric pumps will have savings realized from the natural gas not released. We estimate that each diaphragm pump replaced will save 197 Mcf per year of natural gas from being emitted and each piston pump will have a natural gas savings of 22 Mcf per year. The value of the natural gas saved based on $4.00 per Mcf would be $786 per year per diaphragm pump and $72 per year per piston pump.

7.3.1.3 Instrument Air System

Description

Instrument air systems require a compressor, power source, dehydrator, and volume tank. The same pneumatic pumps can be used for natural gas and compressed air, without altering any of the parts of the pneumatic pump, but instrument air eliminates the emissions of natural gas. All facilities that have access to an adequate and reliable source of electricity can install an instrument air system. The following, taken from the Natural Gas STAR document, "PRO Fact Sheet: Convert Gas Pneumatic Controls to Instrument Air,"[115] describes the major components of an instrument air system:

(1) Compressors used for instrument air delivery are available in various types and sizes, from rotary screw (centrifugal) compressors to positive displacement (reciprocating piston) types. The size of the compressor depends on the size of the facility, the number

[113] Ibid.
[114] U.S. Environmental Protection Agency. *Lessons Learned*. *Replacing Gas-Assisted Glycol Pumps with Electric Pumps*. Available online - http://www.epa.gov/gasstar/documents/ll_glycol_pumps3.pdf.
[115] U.S. Environmental Protection Agency. Lessons Learned from Natural Gas STAR Partners. *Convert Gas Pneumatic Controls to Instrument Air*. Office of Air and Radiation: Natural Gas STAR Program. Washington, DC. 2006.

of control devices operated by the system, and the typical emission rates of these devices. The compressor is usually driven by an electric motor that turns on and off, depending on the pressure in the volume tank. For reliability, a full spare compressor is normally installed.

(2) A critical component of the instrument air control system is the power source required to operate the compressor. Because high-pressure natural gas is abundant and readily available, natural gas-driven pneumatic systems can run uninterrupted on a 24-hour, 7-day per week schedule. The reliability of an instrument air system, however, depends on the reliability of the compressor and electric power supply. Most large natural gas plants have either an existing electric power supply or have their own power generation system. For smaller facilities and remote locations, however, a reliable source of electric power can be difficult to assure. In some instances, solar-powered battery-operated air compressors can be feasible for remote locations, which would both reduce VOC emissions and energy consumption. Small natural gas-powered fuel cells are also being developed.

(3) Dehydrators, or air dryers, are an integral part of the instrument air compressor system. Water vapor present in atmospheric air condenses when the air is pressurized and cooled, and can cause a number of problems to these systems, including corrosion of the instrument parts and blockage of instrument air piping and controller orifices.

(4) The volume tank holds enough air to allow the pneumatic control system to have an uninterrupted supply of high pressure air without having to run the air compressor continuously. The volume tank allows a large withdrawal of compressed air for a short time, such as for a motor starter, pneumatic pump, or pneumatic tools, without affecting the process control functions.

Control Effectiveness

Instrument air eliminates all emissions from natural gas-driven pneumatic pumps, but can only be utilized in locations with sufficient and reliable electrical power. Furthermore, instrument air systems are more economical and therefore more common at facilities with a high concentration of pneumatic devices and where an operator can ensure the system is properly

functioning.[116] Because all emissions can be avoided by converting natural gas-driven chemical pumps to instrument air, methane emissions can be reduced by an estimated 3.46 tpy per diaphragm pump and 0.38 tpy per piston pump. Based on the gas composition for natural gas in the production segment, we estimate that replacement of a pneumatic pump converted to instrument air will reduce VOC emissions by 0.96 tpy per diaphragm pump and 0.11 tpy for a piston pump.

Cost Impacts

As stated previously, instrument air conversions require a compressor with a capacity based on the number of control loops at the location. The compressor size is equivalent to the volume of gas used by the control loops after adjusting for gas losses during drying, plus any utility air necessary at the facility. This volume can either be calculated via a meter or utilizing a rule of thumb of one cubic foot per minute (cfm) of instrument air per control loop.[117]

The costs associated with instrument air systems are primarily capital costs for the compressor(s), air dryer and the volume tank, but also include operational costs for electricity to drive the compressor motor. Other components of the instrument air system including piping, control instruments and valve actuators would already be in place for a gas system. We assume that existing processing plants have an instrument air system in place, including backup systems, and that the cost of increasing air load on the system would be confined to the incremental cost associated with upgrading or replacing the compressor and connecting the pumps to the system. The size of the compressor required would depend on the additional air load required for the instrument air system to handle the pneumatic pumps. Table 7-3 summarizes cost estimates to replace various size compressors in an existing instrument air system.

[116] U.S. Environmental Protection Agency. Lessons Learned from Natural Gas STAR Partners. *Convert Gas Pneumatic Controls to Instrument Air*. Office of Air and Radiation: Natural Gas STAR Program. Washington, DC. 2006.

[117] U.S. Environmental Protection Agency. Lessons Learned from Natural Gas STAR Partners. *Options for Reducing Methane Emissions from Pneumatic Devices in the Natural Gas Industry*. Office of Air and Radiation: Natural Gas STAR Program. Washington, DC. October 2006.

Table 7-3. Cost of Compressor Replacement for Existing Instrument Air System

Type of Pump	Size Option	Total Capital Costs ($2012)	Annualized Cost	Total O&M ($2012)	Annualized with Operating Costs
Diaphragm	Small	$5,999	$854	$9,197	$10,051
Diaphragm	Medium	$29,989	$4,270	$28,002	$32,271
Diaphragm	Large	$52,779	$7,515	$64,880	$72,394
Piston	Small	$5,999	$854	$9,197	$10,051
Piston	Medium	$29,989	$4,270	$28,002	$32,271
Piston	Large	$52,779	$7,515	$64,880	$72,394

7.3.1.4 Route Emissions to an Existing or New Combustion Device

Description

Combustion devices can generally reduce 95 percent of the emissions routed to it. Combustion requires a reliable ignition source where the average gas consumption per pilot burner is 70 scf per hour.[118] Typical combustion devices used in the oil and natural gas industry to control VOC emissions are discussed in greater detail in section 4.3.1.2 of chapter 4 of this document. It is assumed that most processing plants and large dehydration facilities have at least one existing combustion device on-site.

Control Effectiveness

Routing emissions from a natural gas-driven pump to an existing combustion device, or a newly installed combustion device does not reduce the volume of natural gas discharged from the pump, but rather combusts the gas. Based on the gas composition for natural gas in the production segment, we estimated that routing emissions to a combustion device would reduce VOC emissions by an estimated 0.91 tpy per diaphragm pump and 0.1 tpy for a piston pump.

[118] U.S. Environmental Protection Agency. Lessons Learned from Natural Gas STAR Partners. *Options for Reducing Methane Emissions from Pneumatic Devices in the Natural Gas Industry*. Office of Air and Radiation: Natural Gas STAR Program. Washington, DC. October 2006.

Cost Impacts

Routing natural gas to an existing combustion device or installing a new combustion device have associated capital costs and operating costs. Based on costs for a combustion device provided in the 2011 NSPS TSD, the capital costs for installing a new combustion device to control emissions are estimated to cost $32,301 in 2008 dollars.[119] Escalating these costs to 2012 dollars, the estimated capital costs for installing a new combustion device are $34,250 and the annual operating costs are $17,001. Based on the life expectancy for a combustion device, we estimate the annualized costs of installing a new combustion device to be approximately $21,877, and the annualized costs of routing emissions to an existing combustion device to be $285, using a 7 percent discount rate. Because the natural gas captured is combusted there is no gas savings associated with the use of a combustion device to reduce VOC emissions. Table 7-4 presents the estimated VOC cost of control for emission reductions from routing natural gas-driven pump emissions to an existing combustion device, and Table 7-5 presents the cost of control for routing natural gas-driven pump emissions to a new combustion device.

Table 7-4. VOC Cost of Control for Routing Natural Gas-Driven Pump Emissions to an Existing Combustion Device

Pump Type/ Segment	VOC Emission Reductions (tpy/pump)	Annualized Costs ($2012)	VOC Cost of Control ($2012/ton)
Diaphragm Pumps			
Production	0.91	$285	$312
Processing	0.91	$285	$312
Piston Pumps			
Production	0.10	$285	$2,840
Processing	0.10	$285	$2,840

[119] U.S. Environmental Protection Agency. *Oil and Natural Gas Sector: Standards of Performance for Crude Oil and Natural Gas Production, Transmission, and Distribution – Background Technical Support Document for Proposed Standards*. July 2011. EPA Document Number EPA-453/R-11-002.

Table 7-5. VOC Cost of Control for Routing Natural Gas-Driven Pump Emissions to a New Combustion Device

Pump Type/ Segment	VOC Emission Reductions (tpy/pump)	Annualized Costs ($2012)	VOC Cost of Control ($2012/ton)
Diaphragm Pumps			
Production	0.91	$21,877	$23,944
Processing	0.91	$21,877	$23,944
Piston Pumps			
Production	0.10	$21,877	$218,017
Processing	0.10	$21,877	$218,017

7.3.1.5 Route Emissions to a Vapor Recovery Unit (VRU)

Description

Vapor recover units capture low pressure vapor streams, increase the pressure by means of a compressor, and then route the vapor stream to a process or other useful purpose. These systems typically include a backup compressor system to allow for shutdowns and repairs. Vapor recovery units are more economical for facilities with multiple natural gas emission sources that can be routed to the VRU. Some of these other emission sources can include tanks, dehydrators, and compressors and as a result, VRUs are more common at natural gas processing plants. Vapor recovery units are discussed in greater detail in section 4.3.1.1 of chapter 4 of this document.

Control Effectiveness

Use of a vapor recovery technology has the potential to reduce the emissions from natural gas-driven pumps by 100 percent if all vapor is recovered. However, the effectiveness of the natural gas capture system (typically less than 100 percent) and downtime of the VRU for repairs and maintenance would reduce the overall emission reductions and therefore, we estimate that routing emissions from a natural gas-driven pump to an existing or newly installed VRU can reduce the natural gas emitted by approximately 95 percent, while at the same time, capturing the natural gas for beneficial use. We estimate that methane emission reductions for routing gas to a VRU to be 3.29 tpy for a diaphragm pump and 0.36 tpy for a piston pump. Based on the gas composition for natural gas in the production segment, we estimate that routing emissions to a VRU will reduce VOC emissions by 0.91 tpy per diaphragm pump and 0.1 tpy for a piston pump.

Cost Impacts

Based on costs for a VRU provided in the 2011 NSPS TSD for pneumatic pumps, the capital costs and installation costs for a VRU was estimated to be $98,186 in 2008 dollars. [120] We estimate the capital costs of installing a VRU to be $104,111 and the annual operation and maintenance cost to be $9,932 in 2012 dollars. The total annualized costs of a new VRU are estimated to be $24,755 based on a 7 percent discount rate.

If a VRU is already on-site, then the additional costs for routing emissions from a pump are small, as the majority of costs are piping. We estimated the cost of routing emissions to an existing VRU to be $2,000 in 2012 dollars. The annualized costs of routing natural gas emissions to an existing VRU are estimated to be $285 based on a 7 percent discount rate. In addition, there is potential for beneficial use of natural gas recovered through the VRU. We estimated the annual natural gas recovered to be 187 Mcf per year per diaphragm pump and 21 Mcf per year per piston pump. The resulting natural gas savings is estimated to be $749 per diaphragm pump and $84 per piston pump, per year based on a value of $4.00 per Mcf of natural gas recovered. Table 7-6 presents the estimated VOC cost of control for routing natural gas-driven pump emissions to an existing VRU, and Table 7-7 presents the estimated VOC cost of control for routing gas-driven pump emissions to a new VRU.

Table 7-6. VOC Cost of Control for Routing Natural Gas-Driven Pump Emissions to an Existing VRU

Pump Type/ Segment	VOC Emission Reductions (tpy/pump)	Annualized Costs ($2012)	VOC Cost of Control ($2012/ton)	
			Without savings	With savings
Diaphragm Pumps				
Production	0.91	$285	$312	($507)
Processing	0.91	$285	$312	($507)
Piston Pumps				
Production	0.10	$285	$2,840	$2,007
Processing	0.10	$285	$2,840	$2,007

[120] U.S. Environmental Protection Agency. *Oil and Natural Gas Sector: Standards of Performance for Crude Oil and Natural Gas Production, Transmission, and Distribution – Background Technical Support Document for Proposed Standards*. July 2011. EPA Document Number EPA-453/R-11-002.

Table 7-7. VOC Cost of Control for Routing Natural Gas-Driven Pump Emissions to a New VRU

Pump Type/ Segment	VOC Emission Reductions (tpy/pump)	Annualized Costs ($2012)	VOC Cost of Control ($2012/ton)	
			Without savings	With savings
Diaphragm Pumps				
Production	0.91	$24,755	$27,094	$26,274
Processing	0.91	$24,755	$27,094	$26,274
Piston Pumps				
Production	0.10	$24,755	$246,697	$245,860
Processing	0.10	$24,755	$246,697	$245,860

7.3.2 Existing Federal, State and Local Regulations

7.3.2.1 Federal Regulations that Specifically Require Control of VOC Emissions

The EPA has proposed federal requirements for natural gas-driven pneumatic pumps under 40 CFR part 60, subpart OOOOa (subpart OOOOa). Under the proposed subpart OOOOa, each natural gas-driven chemical/methanol and diaphragm pump located at a natural gas processing plant must have zero natural gas emissions, and each natural gas-driven chemical/methanol and diaphragm pump located outside of a natural gas processing plant must reduce VOC emissions by 95 percent or greater when there is a control device already in place at the facility, or when a control device is installed at an existing facility.

7.3.2.2 State and Local Regulations that Specifically Require Control of VOC Emissions

States may have permitting restrictions on VOC emissions that may apply to an emissions source as a result of an operating, NSR NA, or PSD permit (e.g., on a case-by-case basis) based on air quality maintenance or improvement goals of an area. Permits specify what construction is allowed, what emission limits must be met, and often how the source may be operated. To assure that sources follow the permit requirements, permits also contain monitoring, recordkeeping, and reporting requirements. Permits specify what construction is allowed, what emission limits must be met, and often how the source must be operated. To assure that sources

follow the permit requirements, permits also contain monitoring, recordkeeping, and reporting requirements.

At least one state (Wyoming) requires emissions associated with the discharge streams from all natural gas-operated pneumatic pumps be controlled by at least 98 percent or routed into a closed loop system (e.g., sales line, collection line, fuel supply line). Several states also have registration rules for controlling fugitive VOC emissions (which may include fugitive emissions from pneumatic pumps).

7.4 Recommended RACT Level of Control

Based on our evaluation of available data obtained in the development of the 2015 NSPS proposal and peer review comments received on the EPA's white paper "Oil and Natural Gas Sector Pneumatic Devices," and considering that Wyoming already requires emissions associated with the discharge streams from all natural gas-operated pneumatic pumps to be controlled by at least 98 percent or routed into a closed loop system (e.g., sales line, collection line, fuel supply line), we recommend that VOC emissions from individual natural gas-driven piston and diaphragm pumps located from the wellhead to the point of custody transfer to the natural gas transmission and storage segment and at a natural gas processing plant be controlled by RACT.

Our recommended RACT for existing individual gas-driven piston and diaphragm pumps located from the wellhead to the point of custody transfer to the transmission and storage segment, using natural gas emissions as a surrogate for VOC emissions, is to reduce natural gas emissions by 95 percent by routing emissions to a control device where there is an existing control device available on-site. If there is an existing VRU available on-site, then we recommend RACT to be reducing natural gas emissions by 95 percent by using the VRU to route emissions to a process. If a control device is subsequently installed at the facility where the pump is located, then the owner or operator would have to route the natural gas emission stream from the pump to the newly installed control device. Our rationale for selecting 95 percent control when there is an existing control device is that, as presented in Table 7-4 in section 7.3.1.4 of this chapter, the VOC cost of control when an existing combustion device is available on-site was estimated to be $312/ton for diaphragm pumps and $2,850/ton for piston pumps. As presented in Table 7-6 in section 7.3.1.5 of this chapter, the VOC cost of control when an existing VRU is available on-site was estimated to be a cost savings for diaphragm pumps and $2,007/ton for

piston pumps. We consider these costs to be reasonable. Requiring control where there is not an existing control device on-site was not considered to be reasonable available technology, and the costs per ton of VOC reduced are estimated at greater than $20,000 per ton of VOC reduced for diaphragm pumps and over $200,000 per ton of VOC reduced for piston pumps.

Our recommended RACT for existing individual chemical/methanol and diaphragm pump located at natural gas processing plants is that they have zero natural gas emissions (unless there are functional needs, including but not limited to response time, safety and positive actuation, requiring an emission rate greater than zero). Our rationale for selecting a natural gas emission rate of zero (with functional and safety exceptions) for our recommended RACT is based on the ability of most natural gas processing plants to install and utilize an instrument air system. As discussed in section 7.3.1.3 of this chapter, by using an instrument air system, compressed air may be substituted for natural gas in pneumatic systems without altering any of the parts of the pneumatic system. Therefore, the use of instrument air eliminates natural gas and VOC emissions from each gas-driven pneumatic pump and supports a natural gas emission rate of zero.

In summary, we recommend the following RACT for pneumatic pumps in the oil and natural gas industry:

(1) Each Natural Gas-Driven Chemical/Methanol and Diaphragm Pump Located at a Natural Gas Processing Plant: Each pump must have zero natural gas emissions.

(2) Each Natural Gas-Driven Chemical/Methanol and Diaphragm Pump Located From the Wellhead to the Natural Gas Processing Plant: If there is a control device located on-site of the location of the pump, using natural gas as a surrogate for VOC, each pump must reduce natural gas emissions by 95 percent by routing to the control device or to a process. If there is no existing control device at the location of the pneumatic pump, submit a certification that there is no device. If a control device is subsequently added to the site where the pump is located, then the natural gas emissions from the pump must be routed to the newly installed control device.

Although sources have a choice on how they meet the RACT level of control, the technologies that will likely be used to meet the RACT level of control for each natural gas-driven pneumatic pump located from the wellhead to the natural gas processing plant are either routing the natural gas emissions to an on-site existing combustion device (or a subsequently

installed combustion device) or routing the natural gas emissions to a process using an on-site existing VRU (or a subsequently installed VRU).

Similarly, the technology that will likely be used to meet the RACT level of control for each natural gas-driven chemical/methanol and diaphragm pump located at a natural gas processing plant is the use of an existing instrument air system assumed to already exist on-site at natural gas processing plants.

7.5 Factors to Consider in Developing Pneumatic Pump Compliance Procedures

7.5.1 Oil and Natural Gas Production Segment Recommendations

We recommend that regulatory agencies require each pneumatic pump be tagged with the date that the pneumatic pump is required to comply with the rule (as established by the regulating agency) that allows traceability. We also suggest that regulatory agencies require owners and operators of pneumatic pumps to maintain records that document the location and manufacturer's specifications of each pneumatic pump that are tied to the identification information of each pump. We also recommend that regulatory agencies require owner or operators to document deviations in cases where a pneumatic pump was not operated in compliance with RACT. Lastly, we suggest that regulatory agencies require owners and operators to submit annual reports that include the records of deviations that occurred during the reporting period.

The appendix to this document presents example model rule language that incorporates compliance elements recommended in this section that states may choose to use in whole or in part when implementing RACT.

7.5.2 Natural Gas Processing Segment Recommendations

We suggest that regulatory agencies require each pneumatic pump be tagged with the date that the pneumatic pump is required to comply with the rule (as established by the regulating agency) that allows traceability. We also recommend that regulatory agencies require owners and operators of pneumatic pumps to maintain records that document the location and manufacturer's specifications of each pneumatic controller that are tied to the identification information of each pump. The owner or operator should also be required to document deviations in cases where a pneumatic pump was not operated in compliance with RACT. Lastly,

we recommend that regulatory agencies require owners and operators to submit annual reports that include the records of deviations that occurred during the reporting period.

The appendix to this document presents example model rule language that incorporates compliance elements recommended in this section that states may choose to use in whole or in part when implementing RACT.

8.0 EQUIPMENT LEAKS FROM NATURAL GAS PROCESSING PLANTS

This chapter presents the causes for equipment leaks from natural gas processing plants, and provides emission estimates for "model" facilities in the processing segment of the oil and natural gas industry. Methods that are designed to reduce equipment leak emissions are presented, along with our recommended RACT and the associated VOC emission reductions and cost impacts for equipment component leaks from natural gas processing plants.

8.1 Applicability

For purposes of this guideline, the emissions and emission controls discussed herein would apply to the group of all equipment (except compressors) within a process unit located at a natural gas processing plant in VOC service or in wet gas service. For a piece of equipment to be considered not in VOC service, it must be determined that the VOC content can be reasonably expected never to exceed 10.0 percent by weight at or greater than 300 hours per year. For a piece of equipment to be considered in wet gas service, the piece of equipment must contain or contact the field gas before the extraction step at a natural gas processing plant. Equipment is defined as each pump, pressure relief device, open-ended valve or line, valve, and flange or other connector that is in VOC service or in wet gas service

8.2 Process Description and Emission Sources

8.2.1 Process Description

Natural gas processing involves the removal of natural gas liquids from field gas, fractionation of mixed natural gas liquids to natural gas products, or both. The types of process equipment used to separate the liquids are separators, glycol dehydrators, and amine treaters. In addition, centrifugal and/or reciprocating compressors are used to pressurize and move the natural gas from the processing facility to the transmission stations.

There are several potential sources of equipment leak emissions at natural gas processing plants. Equipment such as pumps, pressure relief devices, valves, flanges, and other connectors are potential sources that can leak due to seal failure. Other sources, such as open-ended lines and valves may leak for reasons other than faulty seals. In addition, corrosion of welded connections, flanges, and valves may also be a cause of equipment leak emissions. The following

sub-sections describe potential equipment leak sources and the magnitude of the VOC emissions from natural gas processing plants.

Due to the large number of valves, pumps, and other equipment within natural gas processing plants, VOC emissions from leaking equipment can be significant (chapter 2.2 of the 1983 CTG[121] presents a description of these equipment components and is not repeated here).

8.2.2 Equipment Leak Emission Data and Emission Factors

8.2.2.1 Summary of Major Studies and Emission Factors

The 2012 NSPS STSD evaluated emissions data from equipment leaks collected from chemical manufacturing and petroleum production to assist in the development of control strategies for reducing VOC emissions from these sources.[122,123,124] Table 8-1 presents a list of the studies consulted along with an indication of the type of information contained in the study. In addition to these sources, we evaluated the peer reviewer and public comments received on the EPA's white paper, "Oil and Natural Gas Sector Leaks."[125]

Table 8-1. Major Studies Reviewed for Consideration of Emissions and Activity Data

Report Name	Affiliation	Year of Report	Activity Factors	Emissions Data	Control Options
Protocol for Equipment Leak Emission Estimates[a]	EPA	1995	None	X	X
Methane Emissions from the Natural Gas Industry: Equipment Leaks[b]	EPA/GRI	1996	Nationwide	X	X
Greenhouse Gas Reporting Program[c]	EPA	2014	Nationwide	X	X

[121] U.S. Environmental Protection Agency, Office of Air Quality Planning and Standards, Research Triangle Park, NC, 27711. *Guideline Series. Control of Volatile Organic Compound Equipment Leaks from Natural Gas/Gasoline Processing Plants.* December 1983. EPA-450/3-83-007

[122]Memorandum from David Randall, RTI and Karen Schaffner, RTI to Randy McDonald, U.S. Environmental Protection Agency. *Control Options and Impacts for Equipment Leaks: Chemical Manufacturing Area Source Standards*. September 2, 2008.

[123]Memorandum from Kristen Parrish, RTI and David Randall, RTI to Karen Rackley, U.S. Environmental Protection Agency. *Final Impacts for Regulatory Options for Equipment Leaks of VOC on SOCMI*. October 30, 2007.

[124]Memorandum from Kristen Parrish, RTI, David Randall, RTI, and Jeff Coburn, RTI to Karen Rackley, U.S. Environmental Protection Agency. *Final Impacts for Regulatory Options for Equipment Leaks of VOC in Petroleum Refineries*. October 30, 2007.

[125] U.S. Environmental Protection Agency. *Oil and Natural Gas Sector Leaks*. *Report for Oil and Natural Gas Sector Leaks Review Panel*. Office of Air Quality Planning and Standards (OAQPS). April 2014.

Report Name	Affiliation	Year of Report	Activity Factors	Emissions Data	Control Options
Inventory of Greenhouse Gas Emissions and Sinks: 1990-2012[d]	EPA	2014	Nationwide	X	
Methane Emissions from the Natural Gas Industry[e,f,g,h]	EPA/GRI	1996	Nationwide	X	X
Methane Emissions from the U.S. Petroleum Industry[i]	EPA	1996	Nationwide	X	
Methane Emissions from the US Petroleum Industry[j]	EPA	1999	Nationwide	X	
Oil and Gas Emission Inventories for Western States[k]	Western Regional Air Partnership	2005	Regional	X	X
Recommendations for Improvements to the Central States Regional Air Partnership's Oil and Gas Emission Inventories[l]	Central States Regional Air Partnership	2008	Regional	X	X
Oil and Gas Producing Industry in Your State[m]	Independent Petroleum Association of America	2009	Nationwide		
Emissions from Natural Gas Production in the Barnett Shale and Opportunities for Cost-effective Improvements[n]	Environmental Defense Fund	2009	Regional	X	X
Emissions from oil and Natural Gas Production Facilities[o]	Texas Commission for Environmental Quality	2007	Regional	X	X
Petroleum and Natural Gas Statistical Data[p]	U.S. Energy Information Administration	2007-2009	Nationwide		
Preferred and Alternative Methods for Estimating Air Emissions from Oil and Gas Field Production and Processing Operations[q]	EPA	1999		X	X

[a.] U.S. Environmental Protection Agency, *Protocol for Equipment Leak Emission Estimates.* Office of Air Quality Planning and Standards. Research Triangle Park, NC. November 1995. EPA-453/R-95-017. Available at http://www.epa.gov/ttn/chief/efdocs/equiplks.pdf.

[b.] Gas Research Institute (GRI)/U.S. Environmental Protection Agency. *Research and Development, Methane Emissions from the Natural Gas Industry, Volume 8: Equipment Leaks.* June 1996 (EPA-600/R-96-080h).

[c.] U.S. Environmental Protection Agency. Greenhouse Gas Reporting Program. (Annual Reporting; Current Data Available for 2011-2013). 2014.

[d] U.S. Environmental Protection Agency (EPA). *Inventory of Greenhouse Gas Emissions and Sinks: 1990-2012.* Climate Change Division, Washington, DC.
[e] U.S. Environmental Protection Agency/GRI. *Methane Emissions from the Natural Gas Industry, Vol. 2: Technical Report*. EPA-600/R-96-080b.June 1996.
[f] U.S. Environmental Protection Agency/GRI. *Methane Emissions from the Natural Gas Industry, Vol. 3: General Methodology*. EPA-600/R-96-080c.June 1996.
[g] U.S. Environmental Protection Agency/GRI. *Methane Emissions from the Natural Gas Industry, Vol. 5: Activity Factors*. EPA-600/R-96-080e.June 1996.
[h] U.S. Environmental Protection Agency/GRI. *Methane Emissions from the Natural Gas Industry, Vol. 6: Vented and Combustion Source Summary Emissions*. EPA-600/R-96-080f. June 1996.
[i] U.S. Environmental Protection Agency/GRI. *Methane Emissions from the U.S. Petroleum Industry, Draft Report*. June 14, 1996.
[j] ICF Consulting. *Estimates of Methane Emissions from the U.S. Oil Industry*. Prepared for the U.S. Environmental Protection Agency. 1999.
[k] ENVIRON International Corporation. *Oil and Gas Emission Inventories for the Western States*. Prepared for Western Governors' Association. December 27, 2005.
[l] ENVIRON International Corporation. *Recommendations for Improvements to the Central States Regional Air Partnership's Oil and Gas Emission Inventories Prepared for Central States Regional Air Partnership*. November 2008.
[m] Independent Petroleum Association of America. *Oil and Gas Producing Industry in Your State*.
[n] Armendariz, Al. *Emissions from Natural Gas Production in the Barnett Shale Area and Opportunities for Cost-Effective Improvements*. Prepared for Environmental Defense Fund. January 2009.
[o] Eastern Research Group, Inc. *Emissions from Oil and Gas Production Facilities*. Prepared for the Texas Commission on Environmental Quality. August 31, 2007.
[p] U.S. Energy Information Administration. *Annual U.S. Natural Gas Wellhead Price*. Energy Information Administration. Natural Gas Navigator. Retrieved online on 12 Dec 2010 at http://www.eia.doe.gov/dnav/ng/hist/n9190us3a.htm.
[q] Eastern Research Group, Inc. *Preferred and Alternative Methods for Estimating Air Emissions from Oil and Gas Field Production and Processing Operation*. Prepared for the U.S. Environmental Protection Agency. September 1999.

8.2.2.2 Natural Gas Processing Model Plant

Natural gas processing plants can consist of a variety of combinations of process equipment and components. In order to conduct analyses to be used in evaluating potential options to reduce emissions from leaking equipment, the 2011 NSPS TSD and the 2012 NSPS STSD used a model plant approach.

Information related to equipment counts were obtained from a natural gas industry report.[126] This document provided average equipment counts for gas production and gas processing segments. These average counts were used to develop a model plant. These equipment counts are consistent with those contained in the EPA's analysis to estimate methane emissions conducted in support of the GHGRP. The natural gas processing model plant is discussed in the following section. A summary of the model plant production equipment counts for a gas processing facility is provided in Table 8-2.

[126] U.S. Environmental Protection Agency/GRI. *Methane Emissions from the Natural Gas Industry, Volume 8: Equipment Leaks*. Table 4-13, June 1996. (EPA-600/R-96-080h)

Table 8-2. Equipment Counts for Natural Gas Processing Model Plant

Equipment	Equipment Count (non-compressor equipment)
Valves	1,392
Connectors	4,392
Open-Ended Lines (OEL)	134
Pressure Relief Valve (PRV)	29

Data Source: EPA/GRI, Methane Emissions from the Natural Gas Industry, Volume 8: Equipment Leaks, Table 4-13, June 1996. (EPA-600/R-96-080h)

8.2.2.3 Natural Gas Processing Model Plant Emissions

Overview of Approach

The EPA gathered equipment leak data and cost information for the development of the proposed Uniform Standards for Equipment Leaks rule. These Uniform Standards data were used to estimate baseline emissions for a natural gas processing model plant for the 2012 NSPS STSD and provide the baseline and controlled emission options for processing plants presented in this guideline.[127,128]

The baseline emissions were defined as being equivalent to a 40 CFR part 60, subpart VV (subpart VV) leak detection and repair (LDAR) program, which represents the same set of requirements that apply to natural gas processing plants under 40 CFR part 60, subpart KKK (subpart KKK). The 2012 NSPS requires the implementation of 40 CFR part 60, subpart VVa (subpart VVa) and currently applies to natural gas processing plants constructed or modified after August 23, 2011. It is assumed that natural gas processing plants constructed or modified on or before August 23, 2011 currently still comply with subpart KKK, which is similar to the control level of subpart VV. We evaluated requiring a similar subpart VVa level of control to these plants as was required under the 2012 NSPS. We used leak frequency data (refers to the

[127] Memorandum from Cindy Hancy, RTI International to Jodi Howard, EPA/OAQPS. *Analysis of Emission Reduction Techniques for Equipment Leaks*. December 21, 2011.
[128] U.S. Environmental Protection Agency. *Oil and Natural Gas Sector: Standards of Performance for Crude Oil and Natural Gas Production, Transmission, and Distribution - Background Supplemental Technical Support Document for the Final New Source Performance Standards*. April 2012. EPA Docket Number EPA-HQ-OAR-2010-0505-4550.

estimated percentage of equipment that will be found leaking at a given leak definition) to calculate emission estimates, in addition to several other sources of information (including the Protocol for Equipment Leak Emissions Estimates and industry data).[129] Table 8-3 provides a summary of the equipment leak frequency data used for the natural gas processing model plant. Emission factors are the estimated leak rates for an equipment type at a given leak definition and are normally given in kg/hr/piece of equipment. Table 8-4 provides a summary of the VOC equipment leak emission factors representing the subpart VVa level of control was used for the natural gas processing model plant.

Table 8-3. Summary of Equipment Leak Frequency for Natural Gas

LDAR Program[a]	Valves	Connectors
Baseline	1.18/1.18	NA
Valves	5.95/1.91	NA
Connectors	NA	1.70/0.81

NA = Not Applicable; no equipment leak frequency percent data were available.
Data Source: Memorandum from Cindy Hancy, RTI International to Jodi Howard, EPA/OAQPS, Analysis of Emission Reduction Techniques for Equipment Leaks, December 21, 2011, Table 5.
a. The leak frequencies provided in the tables are presented as initial leak frequency and subsequent leak frequency under the subpart VVa level of control.

Table 8-4. Summary of VOC Equipment Leak Emission Factors for the Natural Gas Processing Model Plant

Component	Uncontrolled (kg/comp-hr)	Baseline (kg/comp-hr)[a]	Subpart VVa Control Level (kg/comp-hr)[b]
Valves	3.71E-04	2.24E-04	8.85E-05
Connectors	1.04E-04	1.04E-04	3.95E-05
OEL	2.30E-03	7.34E-05	NA
PRV	1.60E-01	9.80E-02	NA

NA = Not Applicable
Data Source: Memorandum from Cindy Hancy, RTI International to Jodi Howard, EPA/OAQPS, Analysis of Emission Reduction Techniques for Equipment Leaks, December 21, 2011, Table 7.
a. The baseline option is assumed to be equivalent to a subpart VV LDAR program.
b. Assumed to be equivalent to a subpart VVa LDAR program.

[129] U.S. Environmental Protection Agency. *Protocol for Equipment Leak Emission Estimates*. November 1995. EPA-453/R-95-017

8.3 Available Controls and Regulatory Approaches

8.3.1 Available VOC Emission Control Options

The EPA has determined that leaking equipment, such as valves, pumps and connectors, are a significant source of VOC emissions from natural gas processing plants. The following subsections describe the techniques used to reduce emissions from these sources.

8.3.1.1 Leak Detection and Repair Program

The most commonly employed control technique for equipment leaks is the implementation of a LDAR program. Emission reductions from implementing a LDAR program can potentially reduce product losses, increase safety for workers and operators, decrease exposure of hazardous chemicals to the surrounding community, and reduce emissions fees. The elements of an effective LDAR program include:

(1) Identifying Equipment;
(2) Leak Definition;
(3) Monitoring Equipment;
(4) Repairing Equipment; and
(5) Recordkeeping.

The primary sources of equipment leak emissions from natural gas processing plants are valves and connectors, because these are the most prevalent equipment and can number in the thousands (see Table 8-2). The major cause of emissions from valves and connectors is a seal or gasket failure due to normal wear or improper maintenance. A leak is detected whenever the measured concentration exceeds the threshold standard (i.e., leak definition) for the applicable regulation. Leak definitions vary by regulation, equipment type, service (e.g., light liquid, heavy liquid, gas/vapor), and monitoring interval. Most NSPS regulations have a leak definition of 10,000 ppm, while many National Emission Standards for Hazardous Air Pollutants (NESHAP) regulations use a 500-ppm or 1,000-ppm leak definition. In addition, some regulations define a leak based on visual inspections and observations (such as fluids dripping, spraying, misting or clouding from or around equipment), sound (such as hissing), and smell.

For many NSPS and NESHAP regulations with leak detection provisions, the primary method for monitoring to detect leaking components is EPA Reference Method 21 (40 CFR part

60, appendix A-7). Method 21 is a procedure used to detect VOC leaks from equipment using a toxic vapor analyzer (TVA) or organic vapor analyzer (OVA).

A second method for monitoring to detect leaking components is optical gas imaging (OGI) using an infrared camera. The infrared camera may be passive or active. The passive infrared cameras scan an area to produce images of equipment leaks from a number of sources. Active infrared cameras point or aim an infrared beam at a potential source to indicate the presence of equipment leaks. The optical imaging camera can be very efficient in monitoring multiple pieces of equipment in a short amount of time. However, the optical imaging camera cannot quantify the amount or concentration of the equipment leak.

Acoustic leak detectors measure the decibel readings of high frequency vibrations from the noise of leaking fluids from equipment leaks using a stethoscope-type device. The decibel reading, along with the type of fluid, density, system pressure, and component type can be correlated into leak rate by using algorithms developed by the instrument manufacturer. The acoustic detector does not decrease the monitoring time because components are measured separately, like the OVA or TVA monitoring. The accuracy of the measurements using the acoustic detector can also be questioned due to the number of variables used to determine the equipment leak emissions.

In addition, other monitoring tools such as soap solution and electronic screening devices can be used to monitor process components. Other factors that can improve the efficiency of a LDAR program include training programs for equipment monitoring personnel and tracking systems that address the cost efficiency of alternative equipment (e.g., competing brands of valves in a specific application).

Subpart VVa LDAR Program

One LDAR option to control VOC emissions from natural gas processing plant equipment leaks is the implementation of the subpart VVa LDAR program. This program is similar to the subpart VV monitoring program (whose requirements are cross-referenced in subpart KKK), but finds more leaks due to the lower leak definition, increased monitoring frequency and the addition of connectors to the components being monitored, thereby achieving better emission reductions.

Description

The subpart VVa LDAR program requires the monitoring of pumps, compressors, pressure relief devices, sampling connection systems, open-ended lines, valves and connectors. These components are monitored with an OVA or TVA to determine if a component is leaking and measure the concentration of the organics if the component is leaking. Connectors, valves, and pressure relief devices have a leak definition of 500 ppmv. Valves are monitored monthly, connectors are monitored annually, and open-ended lines and pressure relief valves have no monitoring requirements, but are required to operate without any detectable emissions. Compressors are not included in this leak detection and repair option and are regulated separately.

Control Effectiveness

The control effectiveness of an LDAR program is based on the frequency of monitoring, leak definition, frequency of leaks, percentage of leaks that are repaired, and the percentage of reoccurring leaks. The control effectiveness of a leak program can vary from 45 to 96 percent and is dependent on the frequency of monitoring and the leak definition.[130] Descriptions of the frequency of monitoring and leak definition are described further below.

Monitoring Frequency. The monitoring frequency is the number of times each piece of equipment is checked for leaks over a given period of time. With more frequent monitoring, leaks are found and repaired sooner thus providing higher control effectiveness.

Leak Definition. The leak definition describes the local VOC concentration at the surface of an equipment source where indications of VOC emissions are present. The leak definition is an instrument meter reading, in parts per million based on a reference compound. Decreasing the leak definition generally increases the number of leaks found during a monitoring period, which generally increases the number of leaks that are repaired.

The 2012 NSPS STSD calculated incremental emission reductions from the baseline requirements (assuming that an LDAR program equivalent to the subpart VV/subpart KKK LDAR program is currently implemented at natural gas processing plants), and the leak frequency

[130] U.S. Environmental Protection Agency. *Oil and Natural Gas Sector: Standards of Performance for Crude Oil and Natural Gas Production, Transmission, and Distribution - Background Supplemental Technical Support Document for the Final New Source Performance Standards*. April 2012. EPA Docket Number EPA-HQ-OAR-2010-0505-4550.

and emission factors from a supporting document for the Equipment Leak Uniform Standards were used to calculate the emission reductions and costs. The natural gas processing plant component counts (see Table 8-2) were obtained from a EPA/GRI document.[131] The incremental VOC emission reductions for implementing a subpart VVa leak detection and repair program (as determined in the 2012 NSPS STSD) for the natural gas processing model plant was calculated to be 13 percent.

Cost Impacts

Table 8-5 presents a summary of the incremental capital and annual costs and the cost of control (estimated in the 2012 NSPS STSD) from baseline (subpart VV) to implementing subpart VVa for the gas processing model plant. The costs obtained from the 2012 NSPS STSD have been converted to 2012 dollars from 2008 dollars using the Federal Reserve Economic Data GDP Price Deflater (Change in GDP: Implicit Price Deflator from 2008 to 2012 (5.69 percent)).[132]

Table 8-5. Summary of the Gas Processing Model Plant VOC Cost of Control for the Subpart VVa Option

Annual VOC Emission Reductions (tpy)	Capital Costs ($2012)	Annual Costs ($2012/year)	VOC Cost of Control ($2012/ton)	
			Without savings	With savings[a]
4.56	$8,499	$12,959	$2,844	$2,010

[a] With savings calculated assuming the natural gas (82.9% methane) from the methane reduction has a value of $4/Mscf. The VOC/methane ratio was assumed to be 0.278.

Table 8-6 provides a summary of the capital and annual costs and the cost of control on a component basis for the natural gas processing model plant.

[131] GRI/EPA Research and Development. *Methane Emissions from the Natural Gas Industry; Volume 8: Equipment Leaks*. June 1996. EPA-600/R-96-080h.

[132] U.S. Bureau of Economic Analysis, Gross Domestic Product: Implicit Price Deflator (GDPDEF], retrieved from FRED, Federal Reserve Bank of St. Louis https://research.stlouisfed.org/fred2/series/GDPDEF March, 26, 2015.

Table 8-6. Summary of the Gas Processing Component VOC Cost of Control for the Subpart VVa Option

Component	Annual VOC Emission Reductions (tpy)	Capital Costs ($2012)	Annual Costs ($2012/year)	VOC Cost of Control ($2012/ton)	
				Without Savings	With Savings[a]
Valves	1.82	$5,231	$9,280	$5,095	$4,261
Connectors	2.74	$8,374	$4,405	$1,610	$776

[a] With savings calculated assuming the natural gas (82.9 percent methane) from the methane reduction has a value of $4/Mscf. The VOC/methane ratio was assumed to be 0.278.

8.3.1.2 Leak Detection and Repair Program with Optical Gas Imaging

Another option to control VOC emissions is the implementation of a program that uses OGI to detect equipment leaks. This option is currently available as an alternative work practice (40 CFR part 60, subpart A) for monitoring emissions from equipment leaks in subpart VVa. The alternative work practice requires monthly monitoring of all equipment using OGI and an annual monitoring of all equipment using a Method 21 monitoring device. Method 21 monitoring allows the facility to determine the concentration of a leak and to then use emission factors found in the EPA's emissions leak protocol to quantify emissions from equipment leaks, since the OGI system can only provide the presence of the equipment leaks. A more detailed description of, and the cost of implementing LDAR with OGI program for the natural gas processing model plant is presented in the following paragraphs.

Description

The alternative work practice for equipment leaks in §60.18 of 40 CFR part 60, subpart A allows the use of an OGI system to monitor equipment leaks. This LDAR program requires monthly monitoring and repair of components using OGI and annual monitoring of equipment using a Method 21 instrument. This requirement does not have a leak definition because OGI can only measure the presence of a leak and not the concentration. Compressors are not included in this LDAR option and are discussed in chapter 5 of this document.

Effectiveness

No data were found on the control effectiveness of the alternative work practice. For purposes of this analysis, we assumed that this option would provide the same control effectiveness as the subpart VVa monitoring program. Therefore, the control effectiveness values

for implementing an alternative work practice were assumed to be 93.6 percent for valves, 95.9 percent for connectors, 100 percent for open-ended lines, and 100 percent for pressure relief devices.

Cost Impacts

The 2011 NSPS TSD calculated costs using procedures developed for estimating capital and annual costs for applying LDAR to the Petroleum Refinery and Chemical Manufacturing industry. Costs obtained from the 2011 NSPS TSD have been converted to 2012 dollars from 2008 dollars using the Federal Reserve Economic Data GDP Price Deflater (Change in GDP: Implicit Price Deflator from 2008 to 2012 (5.69 percent)).[133] It was assumed that a single OGI device and a single Method 21 monitoring device could be used at multiple locations. To calculate the shared cost of OGI and the Method 21 devices, the time required to monitor a single facility was estimated. It was assumed for gas processing facilities that the full cost of the OGI system and the Method 21 monitoring device would apply to each individual plant. Assuming a 20-day work month, the total number of facilities that could be monitored by a single OGI system and Method 21 device is 80. Therefore, the shared cost of the Method 21 monitoring device was calculated to be $1,209 per site.

Table 8-7 presents a summary of the capital and annual costs and the VOC cost of control for the natural gas processing model plant using the alternative work practice monitoring. A cost of control analysis on a component basis for the alternative work practice was not performed because the OGI system is intended for facility-wide monitoring.

Table 8-7. Summary of the Natural Gas Processing Model Plant VOC Cost of Control for Optical Gas Imaging and Method 21 Monitoring

Annual VOC Emission Reductions (tpy)	Capital Costs ($2012)	Annual Costs ($2012/year)	VOC Cost of Control ($2012/ton)	
			Without Savings	With Savings
4.56	$97,787	$92,013	$20,192	$19,358

[133] U.S. Bureau of Economic Analysis, Gross Domestic Product: Implicit Price Deflator (GDPDEF), retrieved from FRED, Federal Reserve Bank of St. Louis https://research.stlouisfed.org/fred2/series/GDPDEF March, 26, 2015.

8.3.2 Existing Federal, State and Local Regulations

8.3.2.1 Federal Regulations that Specifically Require Control of VOC Emissions

Federal regulations that regulate VOC emissions from equipment leaks at natural gas processing plants include the 2012 NSPS, subpart KKK and the 1983 CTG (established a recommended RACT for VOC for natural gas processing plants at a level of control equivalent to subpart KKK).

8.3.2.2 State and Local Regulations that Specifically Require Control of VOC Emissions

States may have permitting restrictions on VOC emissions that may apply to an emissions source as a result of an operating, NSR NA, or PSD permit (e.g., on a case-by-case basis) based on air quality maintenance or improvement goals of an area. Permits specify what construction is allowed, what emission limits must be met, and often how the source must be operated. To assure that sources follow the permit requirements, permits also contain monitoring, recordkeeping, and reporting requirements.

We assume that all states currently regulate equipment leaks (except compressors) at existing natural gas processing plants at the 1983 CTG and subpart VV level of control.

8.4 Recommended RACT Level of Control for Equipment Leaks from Equipment at Natural Gas Processing Plants

As discussed in section 8.3.2 of this chapter, existing federal and state and local regulations already require the reduction of VOC emissions using an LDAR program. The 2012 NSPS requires a 40 CFR part 60 subpart VVa LDAR monitoring program for processing plants. The 2012 NSPS reported a cost of control for natural gas processing plants to be $2,844 per ton of VOC removed for the 40 CFR part 60 subpart VVa option, and $20,192 per ton of VOC removed for the Method 21/OGI option. The option for just monitoring just valves or connectors at the 40 CFR part 60 subpart VVa level of control was estimated to be $5,095 and $1,610 per ton of VOC removed, respectively.

Based on costs and existing LDAR programs that are already employed at natural gas processing plants, we recommend that RACT for natural gas processing plants be the implementation of an LDAR program equivalent to what is required under 40 CFR part 60

subpart VVa for equipment (with the exception of compressors) in VOC service. This RACT recommendation would increase the stringency from the currently implemented LDAR programs at most existing natural gas processing plants (that were built prior to 2012) in VOC service by lowering the leak definitions, increasing the monitoring frequency and including additional components. The subpart VVa leak detection and repair program requires the annual monitoring of connectors using an OVA or TVA (500 ppm leak definition), monthly monitoring of valves (500 ppm leak definition) and requires open-ended lines and pressure relief devices to operate with no detectable emissions (500 ppm leak definition). The estimated annual incremental VOC emission reductions for the recommended RACT for a natural gas processing plant was estimated to be 4.56 tpy (see Table 8-5 of this chapter). The annual VOC emission reductions assume a baseline level of control equivalent to the 40 CFR part 60, subpart VV LDAR program. Table 8-5 presents the gas processing model plant VOC cost of control for the recommended RACT. The costs assume a baseline level of control equivalent to the 40 CFR part 60, subpart VV LDAR program. The recommended RACT VOC cost of control is estimated to be $2,844 per ton of VOC reduced without savings and $2,010 with savings.

In summary, we recommend the following RACT for equipment leaks at natural gas processing plants:

> RACT for Equipment Leaks at Natural Gas Processing Plants: We recommend the implementation of an LDAR program equivalent to what is required under 40 CFR part 60 subpart VVa for equipment components (with the exception of compressors) in VOC service.

8.5 Factors to Consider in Developing Equipment Leak Compliance Procedures

Existing natural gas processing plants that would be subject to the recommend RACT are already subject to an LDAR program and the basic elements of the LDAR program for the facility are in place. However, the LDAR program would need to be modified to increase the stringency from the currently implemented LDAR program by lowering the leak definitions, and to require annual monitoring of connectors using an OVA or TVA (500 ppm leak definition), monthly monitoring of valves (500 ppm leak definition) and to require open-ended lines and pressure relief devices to operate with no detectable emissions (500 ppm leak definition). As with the currently implemented LDAR program, to ensure that equipment in VOC service that

leak at natural gas processing plants are properly monitored and repaired under the LDAR RACT recommendations, we suggest that regulatory agencies specify monitoring and equipment component repair recordkeeping and reporting requirements to document compliance.

Monitoring intervals vary according to the applicable regulation, but are typically weekly, monthly, quarterly, and yearly. The monitoring interval depends on the equipment type and periodic leak rate for the equipment. For each piece of equipment that is found to be leaking, the first attempt at repair should be made within a reasonable period of time, such as no later than five calendar days after each leak is detected. First attempts at repair include, but are not limited to, the following best practices, where practicable and appropriate:

(1) Tightening of bonnet bolts;
(2) Replacement of bonnet bolts;
(3) Tightening of packing gland nuts and
(4) Injection of lubricant into lubricated packing.

Once the equipment is repaired, it should be monitored over the next several days to ensure the leak has been successfully repaired. Another method that can be used to repair equipment is to replace the leaking equipment with a "leakless" equipment or other technologies.

When implementing an LDAR program, we recommend that regulatory agencies consider including recordkeeping requirements that require owner/operators of subject facilities to maintain a list of identification numbers for all equipment subject to an equipment leak regulation. A list of equipment that is designated as "unsafe to monitor" should also be maintained with an explanation/review of conditions for the designation. Detailed schematics, equipment design specifications (including dates and descriptions of any changes), and piping and instrumentation diagrams should also be maintained with the results of performance testing and leak detection monitoring.

The appendix to this document presents example model rule language that incorporates compliance elements recommended in this section that states may choose to use in whole or in part when implementing RACT.

9.0 FUGITIVE EMISSIONS FROM WELL SITES AND COMPRESSOR STATIONS

Fugitive emissions from components in the oil and natural gas industry are a source of VOC emissions. This chapter discusses the sources of fugitive emissions, and provides VOC emission estimates for well sites and compressor stations in the production segment (located from the wellhead to the point of custody transfer to the natural gas transmission and storage segment or point of custody transfer to an oil pipeline). This chapter also presents a description of programs that are designed to reduce fugitive emissions, along with costs and emission reductions. Finally, this chapter provides a discussion of our recommended RACT and the estimated VOC emission reductions and costs for fugitive emissions from well sites and compressor stations.

9.1 Applicability

For purposes of this guideline, the emissions and programs to control emissions discussed herein would apply to the collection of fugitive emissions components at a well site with an average production of greater than 15 barrel equivalents per well per day (15 barrel equivalents), and the collection of fugitive emissions components at compressor stations in the production segment. It is our understanding that fugitive emissions at a well site with low production wells are inherently low and that many well sites are owned and operated by small businesses. We are concerned about the burden of the fugitive emissions recommendation on small businesses, in particular where there is little emission reduction to be achieved. For the purposes of this guideline, fugitive emissions recommendations would not apply to well sites that only contain wellheads.

Fugitive emissions, for the purposes of applicability of this guideline, means those emissions from a stationary source that could not reasonably pass through a stack, chimney, vent, or other functionally equivalent opening. Equipment leak emissions at natural gas processing plants are covered under chapter 8 of this document.

9.2 Fugitive Emissions Description and Data

9.2.1 Fugitive Emissions Description

There are several potential sources of fugitive emissions throughout the oil and natural gas industry. Fugitive emissions occur when connection points are not fitted properly or when seals and gaskets start to deteriorate. Changes in pressure, temperature or mechanical stresses can also cause fugitive emissions from components. Fugitive emission components are defined as any component that has the potential to emit fugitive emissions at a well site or gathering and boosting station. These components include valves, connectors, pressure relief devices, open-ended lines (OEL), access doors, flanges, closed vent systems, thief hatches or other openings on storage vessels, agitator seals, distance pieces, crankcase vents, blowdown vents, pump seals or diaphragms, compressors, separators, pressure vessels, dehydrators, heaters, instruments, and meters. Devices that vent as part of normal operations, such as natural gas-driven pneumatic controllers or natural gas-driven pumps, are not fugitive emissions components, insofar as the natural gas discharged from the device's vent is not considered a fugitive emission. Emissions originating from other than the vent, such as seals around the bellows of a diaphragm pump, would be considered fugitive emissions.

In April of 2014, the EPA published a white paper titled "Oil and Natural Gas Sector Leaks"[134] that summarized the EPA current understanding of fugitive emissions at oil and natural gas production, processing and transmission facilities (referred to herein as the "equipment leaks white paper"). The equipment leaks white paper identified 12 studies or publicly available sources that provided fugitive emission estimates from the various segments of the oil and natural gas industry. Many of the fugitive emission measurements were conducted with EPA Method 21 instruments. In addition to EPA Method 21 analyzers, several studies conducted fugitive emission surveys using OGI in conjunction with portable Method 21 analyzers and gas chromatograph equipment to measure individual VOC compounds. These studies provided emission estimates in the form of component or equipment emission factors or emission estimates by facility. Fugitive emission estimates for VOC ranged from 0.4 to 10 tpy for oil and

[134] U.S. Environmental Protection Agency. *Oil and Natural Gas Sector Leaks*, Office of Air Quality Planning and Standards. Research Triangle Park, NC. April 2014. Available at http://www.epa.gov/airquality/oilandgas/2014papers/

natural gas production sites. Even though there is a wide variation in the VOC emissions estimates, the studies showed that there are viable options for reducing these emissions.

9.2.2. Emission Data and Emission Factors

9.2.2.1 Summary of Major Studies and Emission Factors

The equipment leaks white paper provided a summary of fugitive emission studies at oil and natural gas production and compressor stations in the production segment. When we evaluated the emissions and emission reduction options for equipment leaks, many of these studies in the white paper were consulted. Table 9-1 presents a list of the studies consulted along with an indication of the type of information contained in the study.

9.2.2.2 Model Plants

Facilities in the oil and natural gas industry consist of a variety of combinations of process equipment and components. This is particularly true in the production segment of the industry, where "surface sites" can vary from sites where only a wellhead and associated piping is located to sites where a substantial amount of separation, treatment, and compression occurs. In order to conduct analyses to be used in evaluating potential options to reduce fugitive emissions from well sites and gathering and boosting stations, a model plant approach was used. The following sections discuss the creation of these model plants.

We obtained information related to equipment counts for natural gas well sites and gathering and boosting stations from the EPA/GRI natural gas industry study[135]. This document also provided average component counts for equipment in the natural gas production segment. The types of components that are associated with this equipment include: valves, connectors, open-ended lines, and pressure relief valves. These average counts were used to develop an average model plants for well sites in the production segment of the industry and for a gathering and boosting station. Equipment counts associated with oil well sites were obtained from an API Workbook. These equipment counts are consistent with those contained in the EPA's analysis to estimate methane emissions conducted in support of the GHGRP. These model plants are discussed in the following sections.

[135] Gas Research Institute (GRI)/U.S. Environmental Protection Agency. *Research and Development, Methane Emissions from the Natural Gas Industry, Volume 8: Equipment Leaks.* June 1996 (EPA-600/R-96-080h).

Table 9-1. Major Studies Reviewed for Emissions and Activity Data

Report Name	Affiliation	Year of Report	Activity Factors	Emissions Data	Control Options
Protocol for Equipment Leak Emission Estimates[a]	EPA	1995	None	X	X
Methane Emissions from the Natural Gas Industry: Equipment Leaks[b]	EPA/GRI	1996	Nationwide	X	X
Greenhouse Gas Reporting Program[c]	EPA	2013	Facility	X	
Inventory of Greenhouse Gas Emissions and Sinks: 1990-2012[d]	EPA	2014	Regional	X	
Measurements of Methane Emissions at Natural Gas Production Sites in the United States[e]	Multiple Affiliations, Academic and Private	2013	Nationwide	X	X
City of Fort Worth Natural Gas Air Quality Study, Final Report[f]	City of Fort Worth	2011	Fort Worth, TX	X	X
Measurements of Well Pad Emissions in Greeley, CO[g]	ARCADIS/Sage Environmental Consulting/ EPA	2012	Colorado	X	X
Quantifying Cost-Effectiveness of Systematic Leak Detection and Repair Programs Using Infrared Cameras[h]	Carbon Limits	2013	Canada and the U.S.	X	X
Mobile Measurement Studies in Colorado, Texas, and Wyoming[i]	EPA	2012 and 2014	Colorado, Texas, and Wyoming	X	X
Economic Analysis of Methane Emission Reduction Opportunities in the U.S. Onshore Oil and Natural Gas Industries[j]	ICF International	2014	Nationwide	X	X
Identification and Evaluation of Opportunities to Reduce Methane Losses at Four Gas Processing Plants[k]	Clearstone Engineering, Ltd.	2002	4 gas processing plants	X	X

Report Name	Affiliation	Year of Report	Activity Factors	Emissions Data	Control Options
Cost-Effective Directed Inspection and Maintenance Control Opportunities at Five Gas Processing Plants and Upstream Gathering Compressor Stations and Well Sites[l]	Clearstone Engineering, Ltd.	2006	5 gas processing plants, 12 well sites	X	X

[a] U.S. Environmental Protection Agency. *Protocol for Equipment Leak Emission Estimates*. Office of Air Quality Planning and Standards. Research Triangle Park, NC. November 1995. EPA-453/R-95-017. Available at http://www.epa.gov/ttn/chief/efdocs/equiplks.pdf.

[b] U.S. Environmental Protection Agency/GRI. Research and Development, *Methane Emissions from the Natural Gas Industry, Volume 8: Equipment Leaks*. June 1996 (EPA-600/R-96-080h).

[c] U.S. Environmental Protection Agency. Greenhouse Gas Reporting Program. (Annual Reporting; Current Data Available for 2011-2013). 2014.

[d.] U.S. Environmental Protection Agency. *Inventory of Greenhouse Gas Emissions and Sinks: 1990-2011*. Climate Change Division, Washington, DC. April 2013. Available at http://www.epa.gov/climatechange/Downloads/ghgemissions/US-GHG-Inventory-2013-Chapter-3-Energy.pdf.

[e.] Allen, David, T., et al. *Measurements of methane emissions at natural gas production sites in the United States*. Proceedings of the National Academy of Sciences (PNAS) 500 Fifth Street, NW NAS 340 Washington, DC 20001 USA. October 29, 2013. 6 pgs. Available at http://www.pnas.org/content/early/2013/09/10/1304880110.full.pdf+html.

[f.] ERG and Sage Environmental Consulting, LP. *City of Fort Worth Natural Gas Air Quality Study, Final Report*. Prepared for the City of Fort Worth, Texas. July 13, 2011. Available at http://fortworthtexas.gov/gaswells/default.aspx?id=87074.

[g.] Modrak, Mark T., et al. *Understanding Direct Emissions Measurement Approaches for Upstream Oil and Gas Production Operations. Air and Waste Management Association 105th Annual Conference and Exhibition*, June 19-22, 2012 in San Antonio, Texas.

[h.] Carbon Limits. *Quantifying cost-effectiveness of systematic Leak Detection and Repair Programs using Infrared cameras*. December 24, 2013. Available at http://www.catf.us/resources/publications/files/CATF-Carbon_Limits_Leaks_Interim_Report.pdf.

[i.] Thoma, Eben D., et al. *Assessment of Methane and VOC Emissions from Select Upstream Oil and Gas Production Operations Using Remote Measurements, Interim Report on Recent Studies. Proceedings of the 105th Annual Conference of the Air and Waste Management Association*, June 19-22, 2012 in San Antonio, Texas.

[j.] ICF International. *Economic Analysis of Methane Emission Reduction Opportunities in the U.S*. Onshore Oil and Natural Gas Industries. ICF International (Prepared for the Environmental Defense Fund). March 2014.

[k.] Clearstone Engineering Ltd. *Identification and Evaluation of Opportunities to Reduce Methane Losses at Four Gas Processing Plant*s. June, 2002.

[l.] Clearstone Engineering Ltd. *Cost-Effective Directed Inspection and Maintenance Control Opportunities at Five Gas Processing Plants and Upstream Gathering Compressor Stations and Well Sites*. March, 2006.

Well Sites

Oil and natural gas production varies from one site to the next. Some production sites may include only a single wellhead that is extracting oil or natural gas from the ground, while other sites may include multiple wellheads attached to a well site. A well site is a site where the production, extraction, recovery, lifting, stabilization, separation and/or treating of petroleum and/or natural gas (including condensate) occurs. These sites include all equipment (including piping and associated components, compressors, generators, separators, storage vessels, and other equipment) associated with these operations. A well site can serve one well on a pad or multiple wells on a pad. Therefore, the number of components with potential for fugitive

emissions can vary depending on the number of wells feeding into the production pad and the amount of processing equipment located at the site.

We used equipment count data from the EPA GHG Inventory to calculate the average counts of production equipment located at a well site. The types of production equipment located at a well site include: gas wellheads, separators, meters/piping, heaters, and dehydrators. The types of components that are associated with this equipment include: valves, connectors, open-ended lines, and pressure relief valves. Component counts for each of the equipment items were calculated using the average component counts for gas production equipment in the Eastern U.S and the Western U.S. for the EPA/GRI document.

A model plant was developed using the average number of wells associated with a well site using data from the Drillinginfo HPDI database.[136] Baseline fugitive emissions from well sites depend upon the quantity of equipment and components, which in turn is based on this estimate of wells per pad. To estimate the average number of wells co-located on the same site as a new well completion or recompletion, the EPA developed a pair of algorithms that identified new and existing wells within a given distance of a new well completion or recompletion. This distance was assumed to represent the distance that, if other wells were within the distance, the wells would likely be co-located with the well under examination on the same site. The algorithms were written in the open source R programming language.[137]

The HPDI well and production data used to estimate the average number of well co-located on a well site drew upon the latitude and longitude of new well completions and recompletions as well as the coordinates of all wells producing oil or natural gas in 2012. The first algorithm estimated the distances between each new completion and recompletion and all producing wells, which also includes wells newly completed and producing in 2012 within the same county as the completed well. If the distance between the completed well and producing well was less than the assumed size of a typical well site, we assumed the two wells were co-located. This algorithm progressed county by county across the U.S. where oil and natural gas production occurred in 2012 to identify all co-located wells in the U.S. The number of new well completions and recompletions in 2012 was about 44,000, which includes oil and natural gas

[136] Drilling Information, Inc. 2011. *DI Desktop.* 2011 Production Information Database.
[137] See the website <http://www.r-project.org/> for more information on R (The R Project for Statistical Computing). R is a free software environment for statistical computing and graphics.

wells whether they were hydraulically fractured or not. All wells producing in 2012 numbered about 1.27 million. The second algorithm processed the results of the first such that a well can only appear once on a modelled well site.

Once these algorithms were complete and produced a results file, we converted the results into a "kml" file that enabled the visual inspection of the results within Google Earth. We did not visually inspect every site in the U.S. linked to a 2012 completion or recompletion as they numbered greater than 20,000. Instead, we examined sites randomly across a range of oil and natural gas production regions. The results of this visual examination indicated the algorithms were functioning as intended.

We estimated the number of wells per site assuming sites of one, two and three acres, based upon input from petroleum industry data analysts. Table 9-2 shows the high-level results of these analyses.

Table 9-2. Estimated Average Number of Wells per Site of New Well Completion in 2012

Assumed Well Site Size	No. of Well Sites	No. of Wells at Sites	Average of Wells Per Site
One Acre	29,213	50,599	1.73
Two Acres	28,938	52,422	1.81
Three Acres	28,710	53,981	1.88

For assumed well sites of two acres, the analysis identified 28,938 independent well sites that contained 52,422 wells (including both single and multi-well sites). The total number of wells identified as being co-located with new well completions and recompletions exceeds the total number of completions and recompletions because the sites include about 8,500 existing wells producing in 2012.

However, the high level summary presented in Table 9-3 masks variation by basins and well types. Table 9-3 presents more detail along these dimensions for the assumed two-acre well site.

Table 9-3. Estimated Average Number of Wells per Two Acre Site of New Well Completion and Recompletion in 2012, by HPDI Basin and Type of Well (Oil or Natural Gas, Hydraulically Fractured or Not)

		Oil Well Completions			Natural Gas Well Completions			
HPDI Basin	**No. Of Sites**	**HF**	**Not HF**	**All**	**HF**	**Not HF**	**All**	**Total**
Los Angeles	23	N/A	13.07	13.07	N/A	N/A	N/A	13.07
Piceance	111	2.00	1.00	1.75	6.72	11.75	10.14	9.84
Arctic Ocean	2	N/A	5.50	5.50	N/A	N/A	N/A	5.50
Green River	164	2.23	1.57	2.01	4.37	1.13	4.19	3.88
Unidentified	226	1.18	3.57	3.38	1.00	1.77	1.44	3.22
San Joaquin Basin	1,745	1.56	3.46	3.21	2.61	1.42	2.24	3.16
Arkoma Basin	374	4.00	1.33	2.00	3.06	1.00	3.01	3.00
Denver Julesburg	826	2.63	3.10	2.75	1.48	3.14	1.72	2.46
Ft Worth Basin	1,305	2.05	1.86	1.91	3.27	1.10	2.93	2.33
Central Western Overthrust	7	1.50	N/A	1.50	2.60	N/A	2.60	2.29
Ventura Basin	1	N/A	2.00	2.00	N/A	N/A	N/A	2.00
Arctic Slope	42	N/A	2.13	2.13	N/A	1.65	1.65	1.99
Ouachita Folded Belt	181	2.01	1.90	1.99	1.50	1.00	1.43	1.97
Salina Basin	13	N/A	1.92	1.92	N/A	N/A	N/A	1.92
Palo Duro Basin	81	1.42	1.97	1.89	1.00	N/A	1.00	1.86
Uinta	548	1.16	1.33	1.32	N/A	3.33	3.33	1.83
Texas & Louisiana Gulf Coast	3,994	2.03	1.82	1.96	1.37	1.14	1.28	1.79
Central Kansas Uplift	450	N/A	1.78	1.78	N/A	1.53	1.53	1.77
Permian Basin	8,507	1.66	1.76	1.69	1.50	1.57	1.52	1.68
Sedgwick Basin	240	N/A	1.67	1.67	1.67	1.55	1.55	1.62
Las Animas Arch	25	1.00	1.64	1.61	N/A	1.50	1.50	1.60
Nemaha Anticline	38	N/A	1.55	1.55	N/A	N/A	N/A	1.55
Arkla Basin	811	1.09	1.57	1.49	1.47	1.09	1.42	1.46
Chautauqua Platform	461	1.36	1.57	1.49	1.64	1.03	1.35	1.45
Cook Inlet Basin	9	N/A	2.00	2.00	N/A	1.29	1.29	1.44
Appalachian	2,496	1.14	1.05	1.10	2.28	1.10	1.77	1.43
Williston	1,570	1.36	1.00	1.35	1.43	1.00	1.39	1.35
Cherokee Basin	271	1.17	1.29	1.29	N/A	1.69	1.69	1.35
San Juan	158	1.00	1.00	1.00	1.38	1.20	1.37	1.31
East Texas Basin	618	1.25	1.74	1.52	1.22	1.06	1.21	1.31
Forest City Basin	172	N/A	1.28	1.28	N/A	N/A	N/A	1.28
Anadarko Basin	2,663	1.17	1.77	1.37	1.09	1.29	1.13	1.27
South Oklahoma Folded Belt	167	1.17	1.36	1.30	1.11	1.11	1.11	1.24
Chadron Arch	49	N/A	1.22	1.22	N/A	N/A	N/A	1.22

HPDI Basin	No. Of Sites	Oil Well Completions HF	Oil Well Completions Not HF	Oil Well Completions All	Natural Gas Well Completions HF	Natural Gas Well Completions Not HF	Natural Gas Well Completions All	Total
Sacramento Basin	13	N/A	N/A	N/A	N/A	1.15	1.15	1.15
Mississippi & Alabama Gulf Coast	132	1.00	1.18	1.14	1.00	1.00	1.00	1.14
Central Montana Uplift	10	1.13	1.00	1.10	N/A	N/A	N/A	1.10
Big Horn	30	1.10	1.11	1.11	1.00	N/A	1.00	1.10
Powder River	232	1.15	1.03	1.12	1.05	1.00	1.04	1.10
Sweet Grass Arch	17	1.00	1.08	1.05	1.50	1.00	1.33	1.10
Paradox	13	1.00	1.10	1.09	1.00	N/A	1.00	1.08
Black Warrior Basin	57	1.00	1.00	1.00	1.00	1.75	1.07	1.05
Wind River	63	1.00	1.02	1.02	1.00	1.00	1.00	1.02
Wasatch Uplift	1	N/A	1.00	1.00	N/A	N/A	N/A	1.00
North Park	2	1.00	1.00	1.00	N/A	N/A	N/A	1.00
Raton	20	N/A	N/A	N/A	1.00	1.00	1.00	1.00
Grand Total	**28,938**	**1.64**	**1.99**	**1.79**	**1.90**	**1.76**	**1.86**	**1.81**

Table 9-3 provides data that the concentration of wells at production sites varies greatly by basin. However, the analysis indicates that most wells sites have relatively few or no co-located wells, which brings the national average wells per new completion or recompletion site to 1.81 for the two-acre well site. While the analysis shows variation by basin, at the national-level, there is relatively little variation across oil and natural gas well completion sites and whether the new wells were completed or recompleted using hydraulic fracturing. For example, oil well sites averaged 1.79 wells per site while natural gas wells averaged 1.86.

As a result of this analysis, based upon professional judgment, we decided to use the two-acre well site as the assumed maximum size of a site to estimate the number of wells co-located at sites of new completions and recompletions. Also, to simplify analysis of costs and emissions at well sites, we rounded the 1.81 national average wells per site to 2.

While we are confident that the assumed two acre well site is a reasonable size to capture most co-located wells in 2012, it is by no means a perfect assumption. First, industry and state regulatory trends indicate that well drilling will likely become increasingly concentrated on sites, potentially leading to an increase in the average number of wells per well site. However, it is not possible at this point to forecast this increasing concentration, especially with the variations by fields described above. Also, it is possible that two acres is too small to accurately estimate the

number of co-located wells for large well sites in some fields. As a result, the algorithms might result in an under-estimate of the average number of wells at a site and identify more than one site when in actuality there is only one. Alternatively, the assumed two acres might over-estimate the size of sites in some fields and, as a result, pull in more than one site, overestimating the number of wells on the site. We also noted that the latitude and longitude values on many wells were likely incorrect or exact duplicates of other wells. Despite these caveats, we believe that the well site analysis described here produces a reasonable estimate of national average of number of wells on new well completion and recompletion sites in 2012. Therefore, based on this analysis, the model plant for an oil and natural gas production site was based on a well site with 2 wells.

For natural gas well sites, the model plant was developed using the average equipment and fugitive emissions components counts for gas production data from the EPA/GRI report. The average equipment count for a gas well was estimated by weighting the average of equipment counts for the Eastern and Western U.S. data sets for gas production equipment. The weighted averages of the data sets were determined to be 1.6 separators, 0.8 meters/piping, 0.8 in-line heaters, and 0.6 dehydrators per well. The total natural gas well site equipment counts were calculated by multiplying the average well equipment values by the average number of wells per well site (2), and rounding the product to the nearest integer. Average component counts for each of the equipment items were calculated using the average component counts for production equipment in the Eastern U.S and the Western U.S. from the EPA/GRI study. The total number of fugitive emissions components was calculated by multiplying the rounded equipment counts by the component count per equipment and rounding to the nearest integer. Table 9-4 presents a summary of the fugitive emissions component counts for natural gas well sites.

For oil well sites, the model plant was developed using equipment counts from an API workbook and component count data from the EPA/GRI study. The average equipment count for an oil well were determined to be 0.7 separators, 0.7 headers, and 0.03 heater/treaters per well. The total oil well site equipment counts were calculated by multiplying the average well equipment values by the average number of oil wells per oil well site (2), and rounding the product to the nearest integer. Average component counts obtained from the API workbook were used to calculate the total number of components by multiplying the rounded equipment counts by the component count per equipment and rounding up to the nearest integer. Table 9-5 presents a summary of the fugitive emissions component counts for oil well sites.

Table 9-4. Average Component Count for Natural Gas Well Site Model Plant

Equipment	Model Plant Equipment Counts	Average Component Count per Equipment[a]				Average Component Count per Model Plant			
		Valves	Connectors	OELs	PRVs	Valves	Connectors	OELs	PRVs
Gas Wellheads	2	9	37	1	0	19	74	1	0
Separators	2	22	68	4	1	43	137	7	2
Meters/Piping	1	13	48	0	0	13	48	0	0
In-Line Heaters	1	14	65	2	1	14	65	2	1
Dehydrators	1	24	90	2	2	24	90	2	2
					Total	113	414	12	5
					Rounded up Total	114	414	14	6

[a] Data Source: EPA/GRI, *CH_4 Emissions from the Natural Gas Industry, Volume 8: Equipment Leaks*, Table 4-4 and 4-7, June 1996. (EPA-600/R-96-080h)

Table 9-5. Average Component Count for Oil Well Site Model Plant

Equipment	Model Plant Equipment Counts	Average Component Count per Equipment[a]				Average Component Count per Model Plant			
		Valves	Connectors	OELs	PRVs	Valves	Connectors	OELs	PRVs
Oil Wellheads	2	5	18	0	0	10	36	0	0
Separators	1	6	22	0	0	6	22	0	0
Headers	1	5	14	0	0	5	14	0	0
Heater/Treaters	1	8	32	0	0	8	32	0	0
					Total	29	104	0	0
					Rounded up Total	29	104	1	1

[a] Data Source: EPA/GRI, CH_4 Emissions from the Natural Gas Industry, Volume 8: Equipment Leaks, Table 4-4 and 4-7, June 1996. (EPA-600/R-96-08

Baseline emissions for the natural gas well site model plant were calculated using the equipment and fugitive emissions component counts and the representative gas service emission factors. Emissions were estimated using the EPA Protocol which provided total organic compound (TOC) emission factors for production sources (well sites, gathering and boosting). Annual emissions were calculated assuming 8,760 hours of operation each year. Table 9-6 presents the emission factors for the natural gas and oil production segments.
Emissions of VOC were calculated using weight ratios for VOC as described in the 2000 Gas Composition Memorandum developed for the 2012 NSPS[138]. A summary of the equipment counts, and average TOC emission factors and VOC emissions for natural gas and oil well sites are provided in Tables 9-7 and 9-8, respectively. Using these data, the average fugitive emissions from a gas well model plant was determined to be 1.26 tpy of VOC and the average fugitive emissions from an oil well model plant was determined to be 0.302 tpy of VOC. The VOC emission estimates were used to evaluate the potential emission reductions and cost of control of a fugitive emissions reduction program.

Table 9-6. Oil and Natural Gas Production Operations Average TOC Emission Factors

Component Type	Component Service	TOC Emission Factor[a] (kg/hr/source)
Valves	Gas	4.5E-03
Connectors	Gas	2.0E-04
OEL	Gas	2.0E-03
PRV	Gas	8.8E-03

[a] Data Source: EPA, Protocol for Equipment Leak Emission Estimates, Table 2-4, November 1995. (EPA-453/R-95-017)

[138] Memorandum to Bruce Moore from Heather Brown. *Composition of Natural Gas for Use in the Oil and Natural Gas Sector Rulemaking*. EC/R, Incorporated. July, 2011.

Table 9-7. Estimated Fugitive VOC Emissions for Natural Gas Production Model Plant

Natural Gas Well Site Model Plant Component	Model Plant Component Count[a]	Uncontrolled TOC Emission Factor[b] (kg/hr/comp)	Uncontrolled VOC Emissions (tpy)[c]
Valves	114	0.0045	0.957
Connectors	414	0.0002	0.154
OELs	14	0.002	0.052
PRVs	6	0.0088	0.098
		Total	1.26

[a] Component count values for model plant are based on a 2 wellhead pad and are rounded to the nearest integer.
[b] TOC emission factors obtained from Table 2-4 for the EPA Equipment Leaks Protocol for components in gas service.
[c] VOC emissions calculated using 0.193 weight ratio for VOC/TOC obtained from the 2011 Gas Composition Memorandum.

Table 9-8. Estimated Fugitive VOC Emissions for Oil Well Site Model Plant

Natural Gas Well Site Model Plant Component	Model Plant Component Count[a]	Uncontrolled TOC Emission Factor[b] (kg/hr/comp)	Uncontrolled VOC Emissions (tpy)[c]
Valves	29	0.0045	0.243
Connectors	104	0.0002	0.039
OELs	1	0.002	0.004
PRVs	1	0.0088	0.016
		Total	0.302

[a] Component count values for model plant are based on a 2 wellhead pad and are rounded to the nearest integer.
[b] TOC emission factors obtained from Table 2-4 for the EPA Equipment Leaks Protocol for components in gas service.
[c] VOC emissions calculated using 0.193 weight ratio for VOC/TOC obtained from the 2011 Gas Composition Memorandum.

Gathering and Boosting Stations

Gathering and boosting stations are sites that collect natural gas from well sites and direct them to the natural gas processing plants. These stations have similar equipment to well sites; however they are not directly connected to the wellheads. The gathering and boosting station model plant was developed using the average equipment and fugitive emissions component counts for production from the EPA/GRI study. The average equipment counts for a gathering and boosting station were estimated by weighting the average of equipment counts for the Eastern and Western U.S. data sets for production equipment. The weighted averages of the data sets were determined to be 11 separators, 7 meters/piping, 5 gathering compressors, 7 in-line heaters, and 5 dehydrators. Fugitive emissions component counts for each of the production equipment items were calculated using the average component counts for production equipment in the Eastern U.S and the Western U.S. from the EPA/GRI study. The components for gathering compressors were included in the model plant total counts, but the compressor seals were excluded. Compressors seals are addressed in chapter 8 of this document. Table 9-9 presents a summary of the fugitive emissions component counts for gathering and boosting stations.

Baseline emissions were calculated using the component counts and the TOC emission factors for oil and natural gas production (See Table 9-6). Table 9-10 summarizes the baseline emissions for gathering and boosting stations. The average fugitive emissions from a gathering and boosting station were determined to be 9.8 tpy of VOC. The VOC emission estimate was used to evaluate the potential emission reductions and cost of control of a fugitive emissions reduction program.

Table 9-9. Average Component Count for the Oil and Natural Gas Production Gathering and Boosting Station Model Plant

Equipment	Model Plant Equipment Counts	Average Component Count per Equipment[a]				Average Component Count per Model Plant			
		Valves	Connectors	Open-Ended Lines	Pressure Relief Valves	Valves	Connectors	Open-Ended Lines	Pressure Relief Valves
Separators	11	22	68	4	1	242	748	44	11
Meters/Piping	7	13	48	0	0	91	336	0	0
Gathering Compressors	5	71	175	3	4	355	875	15	20
In-Line Heaters	7	14	65	2	1	98	455	14	7
Dehydrators	5	24	90	2	2	120	450	10	10
					Total	906	2,864	83	48

[a] Data Source: EPA/GRI, Methane Emissions from the Natural Gas Industry, Volume 8: Equipment Leaks, Table 4-4 and 4-7, June 1996. (EPA-600/R-96-080h)

Table 9-10. Estimated Fugitive TOC and VOC Emissions for the Oil and Natural Gas Production Gathering and Boosting Station Model Plant

Component	Model Plant Component Count[a]	Component TOC Emission Factor (kg/hr/ component)[b]	VOC Emissions (tons/yr)[c]
Valve	906	0.0045	7.6
Connectors	2,864	0.0002	1.1
OEL	83	0.002	0.3
PRV	48	0.0088	0.8
		Total	9.8

[a] Component counts from Table 9-7. Component count values for model plant are based on 2 wellhead sites and are rounded to the nearest integer.
[b] TOC emission factors obtained from Table 2-4 for the EPA Equipment Leaks Protocol for components in gas service.
[c] VOC emissions calculated using 0.193 weight ratio for VOC/TOC obtained from the 2011 Gas Composition memorandum.

9.3 Available Controls and Regulatory Approaches

9.3.1 Available VOC Emission Control Options

The EPA has determined that fugitive emissions from components are a significant source of VOC emissions from well sites and gathering and boosting stations. Based on the review of public and peer review comments on the equipment leaks white paper and the Colorado and Wyoming state rules, the EPA has identified two options for reducing fugitive VOC emissions from components: a fugitive emissions monitoring program based on the use of OGI leak detection combined with repair of fugitive emission components, and a leak monitoring program based on individual component monitoring using Method 21 for leak detection combined with repair of fugitive emission components. These options, as currently being used by industry to reduce fugitive emissions in the oil and natural gas industry, are described below.

9.3.1.1 Fugitive Emission Detection and Correction with Optical Gas Imaging

Description

The reduction of fugitive emissions from well sites and gathering and boosting stations involves the development of a fugitive emissions monitoring plan. An example plan would incorporate surveying of equipment and components using OGI, which also includes operational requirements for the OGI instrument, along with repair, recordkeeping and reporting requirements. A facility can use a corporate-wide fugitive emissions monitoring plan that covers

the collection of fugitive emission components at well sites and gathering and boosting stations and a site specific fugitive emissions monitoring plan specific to each collection of fugitive emissions components at a well site or gathering and boosting station. Alternatively, a facility can use a site-specific plan for each collection of fugitive emissions components at a well-site or gathering and boosting station that contains both the corporate-wide and site-specific plan elements. The monitoring plan must include inspection of fugitive emission components (including but not limited to valves, connectors, pressure relief devices, open-ended lines, access doors, flanges, closed vent systems, thief hatches or other openings on a storage vessels, agitator seals, distance pieces, crankcase vents, blowdown vents, pump seals or diaphragms, compressors, separators, pressure vessels, dehydrators, heaters, instruments, and meters) and provisions to repair or replace components or equipment if evidence of fugitive emissions is discovered during the OGI survey. All repairs must be made as soon as practicable, but no later than 15 calendar days after the OGI survey. In addition, all repairs must be re-surveyed immediately after repair using Method 21 instrument (using a repair threshold of 10,000 ppm) to ensure the fugitive emissions are no longer visible.

Control Effectiveness

Potential emission reduction percentages from the implementation of an OGI monitoring program varies from 40 to 99 percent.[139] The data from these studies are based on the gathering of individual OGI surveys at various oil and natural gas industry segment sites. The variation in the percent reductions from these OGI surveys generally depended on whether large fugitive emission sources were found (e.g., open thief hatches, open dump valves, etc.) during the OGI survey and other assumptions made by the authors. However, these studies in the white paper did not provide information on the potential emission reductions from the implementation of an annual, semiannual, quarterly or monthly OGI monitoring and repair program. A report was found after the publication of the white paper from the Colorado Air Quality Control Commission[140] estimated (1) 40 percent reduction for annual OGI monitoring for well production tank batteries with an uncontrolled VOC emissions of greater than 6 tpy or less than

[139] U.S. Environmental Protection Agency. *Oil and Natural Gas Sector Leaks*, Office of Air Quality Planning and Standards. Research Triangle Park, NC. April 2014. Available at http://www.epa.gov/airquality/oilandgas/2014papers

[140] Colorado Air Quality Control Commission, *Initial Economic Impact Analysis for Proposed Revisions to Regulation Number 7 (5 CCR 1001-9).* November 15, 2013.

or equal to 12 tpy; (2) 60 percent reduction for quarterly OGI monitoring for well production tank batteries with an uncontrolled VOC emissions of greater than 12 tpy and less than or equal to 50 tpy; (3) 60 percent reduction for quarterly OGI monitoring for well production tank batteries with uncontrolled VOC emissions of greater than 12 tpy and less than or equal to 50 tpy; and (4) 80 percent reduction for monthly OGI monitoring at well production tank batteries with uncontrolled VOC emissions greater than 50 tpy.

From the review of the studies in the white paper and the Colorado Economic Impact Analysis, we expect the emission reductions from the implementation of an OGI monitoring and repair program to vary depending on the frequency of monitoring. For this analysis, we estimated emission reductions for the OGI monitoring frequency options (annual, semiannual and quarterly) using the estimated emission reductions from Colorado's Economic Impact Analysis for conducting the OGI monitoring and repair program. Based on this range of expected emission reductions as characterized by Colorado's Economic Impact Analysis, it is expected that an OGI monitoring program in combination with a repair program can reduce fugitive methane and VOC emissions from these segments by 40 percent on an annual frequency, 60 percent on a semiannual frequency and 80 percent on a quarterly frequency as well as minimize the loss of salable gas. Tables 9-9, 9-10 and 9-11 summarize the estimated emission reductions for annual, semiannual and quarterly OGI monitoring for the oil and natural gas well site model plants and the gathering and boosting station model plant.

Cost Impacts

Costs (2012 dollars) for preparing and implementing a fugitive emission monitoring plan were estimated using hourly estimates for each of the plan elements. The costs are based on the following assumptions:

(1) Labor cost for each of the monitoring plan elements was estimated to be $57.80 per hour;
(2) Reading of the rule and instructions would take one person four hours to complete at a cost of $231.20;
(3) Development of a fugitive emission monitoring plan would take two and one half people a total of 60 hours to complete at a cost of $3,468;
(4) Initial activities planning are estimated to take two people a total of 32 hours to complete at a cost of $1,849;

(5) For companies that own and operate well sites, the cost of notification of compliance status was estimated to be $58 for 22 well sites for a total of $1,272 per company. For gathering and boosting stations the total notification cost was estimated to be $58; and
(6) Subsequent activities planning are estimated to take two people a total of 12 hours to complete at a cost of $1,387. For well sites, this cost was divided among the total number of well sites owned by a company, which was assumed to be 22. The cost per well site was estimated to be $63.

Costs for implementing a fugitive emission monitoring plan on a company level for well sites and a facility level for gathering and boosting stations were estimated for each of the monitoring and repair elements. The costs are based on the following assumptions:

Costs for implementing a fugitive emission monitoring plan on a company level for well sites and a facility level for gathering and boosting stations were estimated for each of the monitoring and repair elements. The costs are based on the following assumptions:

(1) The cost for OGI monitoring using an outside contractor was assumed to be $600 for a well site and $2,300 for a gathering and boosting station for each survey;
(2) Repair costs were estimated to be $299 for well sites and $3,436 for gathering and boosting stations per survey. These costs were estimated assuming that 1.18 percent of the components leak and 75 percent are repaired online and 25 percent are repaired offline;
(3) Cost for resurvey of components after offline repair based on $2.00 per component resurveyed. This is based on the assumption that a company purchases Method 21 instrumentation (estimated to be $10,800[141]) and is able to perform the resurvey without needing contractors; and
(4) Preparation of annual reports was estimated to take one person a total of 4 hours to complete at a cost of $231.

The initial setup cost or capital costs for well sites was calculated by summing up the costs for reading the rule, development of fugitive emissions monitoring plan, initial activities planning, and notification of initial compliance status. The total capital costs of these activities was calculated to be $17,620 per company. Assuming that each company owns and operates 22

[141] Memorandum to Jodi Howard, EPA/OAQPS from Cindy Hancy, RTI International, Analysis of Emission Reduction Techniques for Equipment Leaks, December 21, 2011. EPA-HQ-OAR-2002-0037-0180

well sites, the capital costs per well site was estimated to be $801. For gathering and boosting stations, the capital costs was estimated to be $16,407 per facility.

For well sites and gathering and boosting stations, the annual costs include: subsequent activities planning, OGI camera survey by an outside contractor, cost of repair of fugitive emissions found, preparation and submittal of an annual report, storing and filing of records, and the amortized capital costs over eight years at seven percent discount rate. The annual costs for annual, semiannual and quarterly OGI surveying (inclusive of contractor costs, cost of repair of fugitive emissions found, preparation and submittal of an annual report, and amortized capital costs over eight years at seven percent interest) were calculated for each of the industry segments. Table 9-11, 9-12 and 9-13 present summaries of the cost of control for VOC for the three OGI monitoring frequency options (i.e., annual, semiannual and quarterly). The tables also provide a weighted average for the well sites, which include oil production and natural gas production well sites. The weighted averages were calculated using 2020 activity counts. The number of well sites were derived using information from the DrillingInfo database[142] and assuming an annual growth rate of 6.45 percent, which was determined from National Energy Modeling System (NEMS) data[143]. Using this data and the assumption of 2 well per well site, the 2020 activity counts were determined to be 5,518 gas well sites and 16,562 oil well sites. These values were used to calculate a weighted average cost of control of oil production well sites and natural gas production well sites.

[142] DrillingInfo is a private organization specializing in oil and gas data and statistical analysis. The DrillingInfo database is focused on historical oil and gas production data and drilling permit data. The version used for this analysis was dated February 2014.

[143] NEMS is a model of the U.S. energy economy developed and maintained by the EIA. NEMS is used to produce the Annual Energy Outlook (AEO), a reference publication that provides detailed forecasts of the energy economy from the current year to 2040.

Table 9-11. Summary of the Model Plant VOC Cost of Control for the Annual OGI Monitoring Option

Model Plant	Annual VOC Emission Reductions (tpy)[a]	Capital Costs ($2012) [b]	Annual Costs ($2012/year)[c]		Cost of Control ($2012/ton)	
			Without savings	With savings [d]	Without savings	With savings [d]
Natural Gas Well Site	0.50	$801	$1,329	$908	$2,633	$1,799
Oil Well Site	0.12	$801	$1,329	$1,228	$10,992	$10,158
Well Site Program Weighted Average [e]					**$8,903**	**$8,069**
Gathering and Boosting Station	3.9	$16,407	$10,124	$6,865	$2,591	$1,757

[a.] Assumes 40% reduction with the implementation of annual OGI monitoring.
[b.] The capital costs for oil and natural gas well sites and gathering and boosting stations includes the cost of implementing the monitoring program which includes reading the rule, developing and implementing a monitoring plan (including initial activities planning), notification of initial compliance status, and purchase of a Method 21 monitoring device.
[c.] Annual costs for oil and natural gas well sites and gathering and boosting stations include annual monitoring and repair costs and amortization of the capital costs over 8 years at 7% interest.
[d.] Recovery credits were calculated based on methane reductions, assuming methane is 82.9% of natural gas composition, and the value of the natural gas recovered as $4 Mcf.
[e.] The weighted average for well sites was calculated using the 2020 activity counts of 5,518 gas well sites and 16,562 oil well sites.

Table 9-12. Summary of the Model Plant VOC Cost of Control for the Semiannual OGI Monitoring Option

Model Plant	Annual VOC Emission Reductions (tpy) [a]	Capital Costs ($2012)[b]	Annual Costs ($2012/year) [c]		Cost of Control ($2012/ton)	
			Without savings	With savings [d]	Without savings	With savings [d]
Natural Gas Well Site	0.76	$801	$2,230	$1,599	$2,945	$2,111
Oil Well Site	0.18	$801	$2,230	$2,079	$12,294	$11,460
Well Site Program Weighted Average [e]					**$9,958**	**$9,124**
Gathering and Boosting Station	5.85	$16,407	$15,881	$10,993	$2,710	$1,876

[a.] Assumes 60% reduction with the implementation of semiannual OGI monitoring.
[b.] The capital cost for oil and natural gas well sites and gathering and boosting stations includes the cost of implementing the monitoring program which includes reading the rule, developing and implementing a monitoring plan (including initial activities planning), notification of initial compliance status, and purchase of a Method 21 monitoring device.
[c.] Annual costs for oil and natural gas well sites and gathering and boosting stations include semiannual monitoring and repair costs and amortization of the capital cost over 8 years at 7% interest.
[d.] Recovery credits were calculated based on methane reductions, assuming that methane is 82.9% of natural gas composition, and the value of the natural gas recovered as $4 Mcf.
[e.] The weighted average for well sites was calculated using the 2020 activity counts of 5,518 gas well sites and 16,562 oil well sites.

Table 9-13. Summary of the Model Plant VOC Cost of Control for the Quarterly OGI Monitoring Option

Model Plant	Annual VOC Emission Reductions (tpy) [a]	Capital Costs ($2012)[b]	Annual Costs ($2012/year) [c]		Cost of Control ($2012/ton)	
			Without savings	With savings [d]	Without savings	With savings [d]
Natural Gas Well Site	1.01	$801	$4,031	$3,190	$3,994	$3,160
Oil Well Site	0.24	$801	$4,031	$3,830	$16,669	$15,836
Well Site Program Weighted Average [e]					**$13,502**	**$12,668**
Gathering and Boosting Station	7.81	$16,407	$27,396	$20,879	$3,506	$2,672

[a] Assumes 80% reduction with the implementation of quarterly OGI monitoring.
[b] The capital costs for oil and natural gas well sites and gathering and boosting stations includes the cost of implementing the monitoring program which includes reading the rule, developing and implementing a monitoring plan (including initial activities planning), notification of initial compliance status, and purchase of a Method 21 monitoring device.
[c.] Annual costs for oil and natural gas well sites and gathering and boosting stations include quarterly monitoring and repair costs and amortization of the capital costs over 8 years at 7% interest.
[d] Recovery credits were calculated assuming natural gas reductions based methane reductions, methane as 82.9% of natural gas composition, and the value of the natural gas recovered as $4 Mcf.
[e.] The weighted average for well sites was calculated using the 2020 activity counts of 5,518 gas well sites and 16,562 oil well sites.

9.3.1.2 Fugitive Emission Detection and Correction with Method 21

Description

Another option that can be used to reduce fugitive emissions from well sites and gathering and boosting stations involves the development of a fugitive emissions monitoring plan using Method 21 to detect leaks from equipment and components. The plan would incorporate surveying of equipment and components at a specified interval and repair threshold using a Method 21 instrument, which also includes operational requirements for the Method 21 instrument, along with repair, recordkeeping and reporting requirements. A facility can use a corporate-wide fugitive emissions monitoring plan that covers the collection of fugitive emission components at well sites and gathering and boosting stations and a site specific fugitive emissions monitoring plan specific to each collection of fugitive emissions components at a well site or gathering and boosting station. Alternatively, a facility can use a site-specific plan for each collection of fugitive emissions components at a well-site or gathering and boosting station that contains both the corporate-wide and site-specific plan elements. The plan would also

include provisions for repair or replacement of equipment or components if evidence of fugitive emissions are discovered during the survey. The monitoring plan would include inspection of all fugitive emission components and would require the repair where evidence of fugitive emissions is discovered (as soon as practicable, but generally no later than 15 calendar days after the Method 21 survey). In addition, all repairs would be re-surveyed immediately after repair to ensure the fugitive emissions are below the specified repair threshold.

Control Effectiveness

Potential control efficiencies for Method 21 monitoring were estimated to be 67 to 98 percent depending on repair threshold and monitoring frequency in the 2015 NSPS proposal. The Method 21 control options included repair thresholds of 10,000, 2,500 and 500 parts per million (ppm) and annual, semiannual and quarterly monitoring frequencies. Tables 9-12, 9-13 and 9-14 present the summaries of the estimated emission reductions for annual, semiannual and quarterly Method 21 monitoring for the three repair thresholds for the well site and the gathering and boosting station model plants.

Cost Impacts

Costs (2012 dollars) for preparing and implementing a fugitive emission monitoring plan were estimated using hourly estimates for each of the plan elements. The costs are based on the following assumptions:

(1) Labor cost for each of the monitoring plan elements was estimated to be $57.80 per hour;
(2) Reading of the rule and instructions would take one person four hours to complete at a cost of $231.20;
(3) Development of a fugitive emission monitoring plan would take two and one half people a total of 60 hours to complete at a cost of $3,468;
(4) Initial activities planning are estimated to take two people a total of 16 hours to complete at a cost of $1,849;
(5) For companies that own and operate well sites, the cost notification of compliance status was estimated to be $58 for 22 well sites for a total of $1,272 per company. For gathering and boosting stations the notification of compliance cost was estimated to be $58;
(6) The cost of purchasing a Method 21 monitoring device and data collection system was estimated to be $25,300 per company; and

(7) Subsequent activities planning are estimated to take two people a total of 12 hours to complete at a cost of $1,387. For oil and natural gas well sites, this cost was divided among the total number of well sites owned by a company, which was assumed to be 22. The cost per well site was estimated to be $63. For gathering and boosting stations the subsequent activities planning was estimated to be $1,387.

Costs for implementing a fugitive emission monitoring plan on a company level for well sites and a facility level for gathering and boosting stations were estimated for each of the monitoring and repair elements. The costs are based on the following assumptions:

(1) Method 21 monitoring was estimated to take 2 people a total of 4 hours to survey a well production site at a cost of $462 per survey. For gathering and boosting stations, Method 21 monitoring was estimated to take 2 people a total of 8 hours to survey the station at a cost of $925 per survey;

(2) Annual repair costs for well sites were estimated to be $2,999 using a repair threshold of 10,000 ppm, $5,067 using a repair threshold of 2,500 ppm and $5,400 using a repair threshold of 500 ppm. These costs were estimated assuming that 7.49% of the components leak at 10,000 ppm, 12.25% of the components leak at 2,500 ppm and 13.53% of the components leak at 500 ppm. The repair costs assume 75% are repaired online and 25% are repaired offline;

(3) Annual repair costs for gathering and boosting stations were estimated to be $29,288 using a repair threshold of 10,000 ppm, $47,821 using a repair threshold of 2,500 ppm and $52,900 using a repair threshold of 500 ppm. These costs were estimated assuming that 7.49% of the components leak at 10,000 ppm, 12.25% of the components leak at 2,500 ppm and 13.53% of the components leak at 500 ppm. The repair costs assume 75% are repaired online and 25% are repaired offline;

(4) Cost for resurvey of components after repair based on $2.00 per component resurveyed; and

(5) Preparation of annual reports was estimated to take 1 person a total of 4 hours to complete at a cost of $231.

The initial setup cost or capital costs for oil and natural gas well sites was calculated by summing up the costs for reading the rule, development of fugitive emissions monitoring plan, initial activities planning, acquisition of a Method 21 monitoring device and data collection

system and notification of initial compliance status. The total capital costs of these activities was estimated to be $32,120 per company. Assuming that each company owns and operates 22 well sites, the capital costs per well site was estimated to be $1,460.

For gathering and boosting stations, the capital costs includes; reading the rule, development of fugitive emissions monitoring plan, initial activities planning, acquisition of a Method 21 monitoring device and data collection system and notification of initial compliance status. The total capital costs of these activities was estimated to be $30,907 per station.

For oil and natural gas well sites, the annual costs include; subsequent activities planning, Method 21 survey, cost of repair of fugitive emissions found, preparation and submittal of an annual report, storing and filing of records, and the amortized capital costs over eight years at seven percent interest. The annual costs for annual, semiannual and quarterly Method 21 surveying (inclusive of cost of repair of fugitive emissions found, preparation and submittal of an annual report, and amortized capital costs over eight years at seven percent interest) were calculated for each of the industry segments. Tables 9-14, 9-15 and 9-16 present summaries of the cost of control for VOC at each of the repair thresholds (i.e., 10,000, 2,500, and 500 ppm) for the three monitoring frequency options (i.e., annual, semiannual and quarterly).

Table 9-14. Summary of the Model Plant VOC Cost of Control for the Annual Method 21 Monitoring Option

Model Plant	Annual VOC Emission Reductions (tpy) [a]	Capital Costs ($2012) [b]	Annual Costs ($2012/year) [c]		Cost of Control ($2012/ton)	
			Without savings	With savings [d]	Without savings	With savings [d]
10,000 ppm Repair Threshold						
Natural Gas Well Site	1.03	$1,460	$4,020	$3,157	$3,885	$3,051
Oil Well Site	0.20	$1,460	$4,020	$3,813	$19,847	$18,826
Well Site Program Weighted Average [e]					**$15,858**	**$14,884**
Gathering and Boosting Station	8.01	$30,907	$37,203	$30,523	$4,644	$3,810
2,500 ppm Repair Threshold						
Natural Gas Well Site	1.19	$1,460	$6,103	$5,113	$5,145	$4,311
Oil Well Site	0.28	$1,460	$6,103	$5,866	$21,475	$20,642
Well Site Program Weighted Average [e]					**$17,394**	**$16,560**
Gathering and Boosting Station	9.18	$30,907	$55,860	$48,203	$6,083	$5,249
500 ppm Repair Threshold						
Natural Gas Well Site	1.24	$1,460	$6,437	$5,406	$5,206	$4,372
Oil Well Site	0.30	$1,460	$6,437	$6,190	$21,728	$20,894
Well Site Program Weighted Average [e]					**$17,599**	**$16,765**
Gathering and Boosting Station	9.57	$30,907	$60,973	$52,990	$6,369	$5,535

[a.] Assumes 84% reduction at 10,000 ppm repair threshold, 94% reduction at 2,500 ppm repair threshold and 98% reduction at 500 ppm repair threshold with the implementation of annual Method 21 monitoring.
[b.] The capital costs for oil and natural gas well sites and gathering and boosting stations includes the cost of implementing the monitoring program which includes reading the rule, developing and implementing a monitoring plan (including initial activities planning), notification of initial compliance status, and purchase of a Method 21 monitoring device.
[c.] Annual costs for oil and natural gas well sites and gathering and boosting stations include annual monitoring and repair costs and amortization of the capital costs over 8 years at 7% interest.[d.] Recovery credits for oil and natural gas well sites were calculated assuming natural gas reductions based methane reductions, methane as 82.9% of natural gas composition, and the value of the natural gas recovered as $4 Mcf.
[e.] The weighted average for well sites was calculated using the 2020 activity counts of 5,518 gas well sites and 16,562 oil well sites.

Table 9-15. Summary of the Model Plant VOC Cost of Control for the Semiannual Method 21 Monitoring Option

Model Plant	Annual VOC Emission Reductions (tpy) [a]	Capital Costs ($2012)[b]	Annual Costs ($2012/year) [c]		Cost of Control ($2012/ton)	
			Without savings	With savings [d]	Without savings	With savings [d]
10,000 ppm Repair Threshold						
Natural Gas Well Site	0.91	$1,460	$4,482	$3,725	$4,934	$4,100
Oil Well Site	0.22	$1,460	$4,482	$4,301	$20,593	$19,759
Well Site Program Weighted Average [e]					**$16,680**	**$15,846**
Gathering and Boosting Station	7.03	$30,907	$38,128	$32,263	$5,421	$4,587
2,500 ppm Repair Threshold						
Natural Gas Well Site	1.16	$1,460	$6,565	$5,597	$5,655	$4,821
Oil Well Site	0.28	$1,460	$6,565	$6,333	$23,605	$22,771
Well Site Program Weighted Average [e]					**$19,119**	**$18,285**
Gathering amd Boosting Station	8.99	$30,907	$56,785	$49,291	$6,318	$5,485
500 ppm Repair Threshold						
Natural Gas Well Site	1.22	$1,460	$6,899	$5,879	$5,637	$4,803
Oil Well Site	0.29	$1,460	$6,899	$6,655	$23,529	$22,695
Well Site Program Weighted Average [e]					**$19,058**	**$18,224**
Gathering and Boosting Station	9.48	$30,907	$61,898	$53,996	$6,532	$5,698

[a.] Assumes 72% reduction at 10,000 ppm repair threshold, 92% reduction at 2,500 ppm repair threshold and 97% reduction at 500 ppm repair threshold with the implementation of annual Method 21 monitoring.
[b.] The capital costs for oil and natural gas well sites and gathering and boosting stations includes the cost of implementing the monitoring program which includes reading the rule, developing and implementing a monitoring plan (including initial activities planning), notification of initial compliance status, and purchase of a Method 21 monitoring device.
[c.] Annual costs for oil and natural gas well sites and gathering and boosting stations include semiannual monitoring and repair costs and amortization of the capital costs over 8 years at 7% interest.
[d.] Recovery credits for oil and natural gas well sites were calculated assuming natural gas reductions based methane reductions, methane as 82.9% of natural gas composition, and the value of the natural gas recovered as $4 Mcf.
[e.] The weighted average for well sites was calculated using the 2020 activity counts of 5,518 gas well sites and 16,562 oil well sites.

Table 9-16. Summary of the Model Plant VOC Cost of Control for the Quarterly Method 21 Monitoring Option

Model Plant	Annual VOC Emission Reductions (tpy) [a]	Capital Costs ($2012)[b]	Annual Costs ($2012/year) [c]		Cost of Control ($2012/ton)	
			Without savings	With savings [d]	Without savings	With savings [d]
10,000 ppm Repair Threshold						
Natural Gas Well Site	0.85	$1,460	$5,407	$4,702	$6,396	$5,562
Oil Well Site	0.20	$1,460	$5,407	$5,238	$26,696	$25,862
Well Site Program Weighted Average [e]					**$21,623**	**$20,789**
Gathering and Boosting Station	6.55	$30,907	$39,978	$34,519	$6,108	$5,274
2,500 ppm Repair Threshold						
Natural Gas Well Site	1.12	$1,460	$7,490	$6,553	$6,669	$5,835
Oil Well Site	0.27	$1,460	$7,490	$7,265	$27,838	$27,004
Well Site Program Weighted Average [e]					**$22,548**	**$21,714**
Gathering and Boosting Station	8.69	$30,907	$58,635	$51,385	$6,744	$5,910
500 ppm Repair Threshold						
Natural Gas Well Site	1.19	$1,460	$7,824	$6,835	$6,597	$5,763
Oil Well Site	0.28	$1,460	$7,824	$7,587	$27,534	$26,700
Well Site Program Weighted Average [e]					**$22,302**	**$21,468**
Gathering and Boosting Station	9.18	$30,907	$63,747	$56,090	$6,942	$6,108

[a.] Assumes 67% reduction at 10,000 ppm repair threshold, 89% reduction at 2,500 ppm repair threshold and 94% reduction at 500 ppm repair threshold with the implementation of annual Method 21 monitoring.
[b.] The capital costs for oil and natural gas well sites includes the cost of implementing the monitoring program of $32,120 divided by an average of 22 well sites per company.
[c.] Annual costs for oil and natural gas well sites and gathering and boosting stations include semiannual monitoring and repair costs and amortization of the capital costs over 8 years at 7% interest.
[d.] Recovery credits for oil and natural gas well sites were calculated assuming natural gas reductions based methane reductions, methane as 82.9% of natural gas composition, and the value of the natural gas recovered as $4 Mcf.
[e.] The weighted average for well sites was calculated using the 2020 activity counts of 5,518 gas well sites and 16,562 oil well sites.

9.3.2 Existing Federal, State and Local Regulations

9.3.2.1 Federal Regulations that Specifically Require Control of VOC Emissions

For each well site and compressor station, the EPA is proposing NSPS requirements that would require the development of one or more fugitive emissions monitoring plans that includes semiannual monitoring by OGI and repair of leaking fugitive emission components.

9.3.2.2 State and Local Regulations that Specifically Require Control of VOC Emissions

States may have permitting restrictions on VOC emissions that may apply to an emission source as a result of an operating, NSR NA, or PSD permit (e.g., on a case-by-case basis) based on air quality maintenance or improvement goals of an area. Permits specify what construction is allowed, what emission limits must be met, and often how the source must be operated. To assure that sources follow the permit requirements, permits also contain monitoring, recordkeeping, and reporting requirements. Permits specify what construction is allowed, what emission limits must be met, and often how the source must be operated. To assure that sources follow the permit requirements, permits also contain monitoring, recordkeeping, and reporting requirements.

The State of Colorado has regulations that require annual leak inspections at all well sites, compressor stations upstream of the processing plant and storage vessels. These regulations allow OGI inspections, Method 21 or other "[d]ivision approved instrument based monitoring device or method" to detect leaks (Colorado Department of Public Health and Environment, Air Quality Control Commission, Regulation Number 7).

The State of Wyoming, as part of its permitting guidance, requires facilities with VOC emissions greater than 4 tpy in the Upper Green River Basin, the Jonah-Pinedale Anticline Development Area and Normally Pressured Lance to conduct quarterly leak emissions inspections, and OGI inspections are allowed in addition to Method 21 inspections or audio-visual-olfactory inspections (Wyoming Department of Environmental Quality, Oil and Gas Production Facilities, Chapter 6, Section 2 Permitting Guidance, September 2013).

The State of Ohio requires operators to perform regular inspections to identify methane equipment leaks from horizontal wells and to repair leaks, where indicated. An owner or operator can either apply for a general or traditional emissions permit. The State of Ohio's updated existing leak detection general permit requires more frequent monitoring through use of infrared cameras and portable sampling instruments. Initially, operators must conduct quarterly, rather than annual, leak monitoring. If minimal leaks are found, leak monitoring can be reduced to semiannual or annual inspections. If leaks are in excess of two percent, however, operators must continue quarterly monitoring. When leaks are identified, corrective action must be taken within five days (Ohio EPA General Permit Program; http://epa.ohio.gov/dapc/genpermit/genpermits.aspx#127854018-recently-issued-model-general-permits).

9.4 Recommended RACT Level of Control

Based on our evaluation of available data obtained in the development of the 2015 proposed NSPS, peer review comments received on the equipment leaks white paper, and existing regulations that control VOC emissions from oil and natural gas production sites, we recommend that RACT for the collection of fugitive emission components at well sites with an average production of greater than 15 barrel equivalents and gathering and boosting stations be the implementation of a monitoring plan that includes semiannual monitoring using OGI and repair of components that are found to be leaking.

As discussed in section 9.3.2.2 of this chapter, existing state and local regulations already require fugitive emissions monitoring of oil and natural gas production sites. The monitoring techniques listed in these requirements include the use of either Method 21 or OGI to locate fugitive emissions from equipment and components. In addition, peer review comments received on the equipment leaks white paper show that some companies are voluntarily monitoring their production sites using OGI to eliminate leaks from equipment. Monitoring and repair of equipment and components using OGI or Method 21 are the most viable methods for reducing fugitive emissions from equipment leaks in the production segment of the oil and natural gas industry.

Although both Wyoming and Ohio require quarterly monitoring of components at production sites and Pennsylvania has drafted a General Operating Permit that specifies quarterly

monitoring at a compressor station, we believe that quarterly monitoring could cause a burden on small businesses in the U.S. We believe that many operators would need to hire contractors due to the cost of the specialized equipment needed to perform the monitoring survey and the training necessary to properly operate the equipment whether OGI or Method 21 is used. In addition, we believe that small businesses would be the most likely to hire such contractors because they are less likely to have excess capital to purchase monitoring equipment and train operators. There is some concern regarding the limited supply of qualified contractors to perform monitoring surveys which may lead to disadvantages for small businesses. Larger businesses, due to the economic clout they have by offering the contractors more work due to the higher number of wells they own, may preferentially retain the services of a large portion of the available contractors. This could potentially result in small businesses experiencing a longer wait time to obtain contractor services. The monitoring plan recommendations would also cause the surveys to take more time, thus affecting the availability of OGI equipment and contractors. Therefore, if quarterly monitoring surveys are specified, the available supply of qualified contractors and OGI instruments may not be sufficient for small businesses to obtain timely monitoring surveys. For these reasons, we recommend that semiannual monitoring at well sites and gathering and boosting compressor stations as RACT.

The VOC cost of control for semiannual monitoring using OGI was estimated to be $2,111 per ton of VOC reduced for natural gas well sites, $11,460 per ton of VOC reduced for oil well sites with a weighted average of $9,124 per ton of VOC reduced, and $1,876 per ton of VOC reduced for gathering and boosting stations considering natural gas savings. The cost of control for natural gas well sites and gathering and boosting stations is considered to be reasonable. For oil well sites, although the cost per ton of VOC reduced is higher than it is for natural gas wells sites and gathering and boosting stations, since publication of the "Oil and Natural Gas Sector Leaks"[144] white paper, additional emissions data have become available, including reporting year 2013 data from GHGRP that confirm that fugitive emission sources are significant from oil and natural gas well sites and gathering and boosting stations. Notably, we further identified that many studies have shown a skewed distribution for emissions related to leaks, where a majority of emissions come from a minority of sources. Commenters on the white papers agreed that emissions from equipment leaks exhibit a skewed distribution, and pointed to

[144] Available at http://www.epa.gov/airquality/oilandgas/2014papers/20140415leaks.pdf.

other examples of data sets in which the majority of VOC emissions from leaks come from a minority of components. Commenters noted that emitters are likely due to random occurrences of low-probability but high-emissions conditions. Commenters also noted that in addition to variation in emissions per component, there can be significant variation in component counts and that these vary based on well production, site geography, type of gas, and company-determined processing equipment.

For well sites, the cost of control for a monitoring plan using Method 21 with a 10,000 ppm leak detection is generally more costly than the use of OGI where there are a large number of equipment components to be monitored. The cost for a natural gas well site was estimated to be $3,051 per ton of VOC for annual monitoring and $4,100 per ton of VOC for semiannual monitoring considering natural gas savings. The cost for an oil well site was estimated to be $18,826 per ton of VOC for annual monitoring and $19,759 per ton of VOC for annual monitoring considering natural gas savings. As shown in section 9.3.1 of this chapter, the cost of control for the 2,500 ppm and 500 ppm repair threshold options are higher than the 10,000 ppm repair threshold option. The use of a monitoring plan using Method 21 with a 10,000 ppm leak detection may, however, be a lower cost alternative to OGI where there are fewer equipment components to be monitored. For gathering and boosting stations, the cost of control for a monitoring plan using Method 21 with a 10,000 ppm leak detection is estimated to be $4,587 per ton of VOC removed for semiannual monitoring and $3,810 for annual monitoring considering natural gas savings.

In summary, we recommend the following RACT for the collection of fugitive emission components at oil and natural gas well sites and compressor stations in the production segment:

> <u>RACT for the Collection of Fugitive Emission Components at Oil and Natural Gas Well Sites with Wells that Produce, on Average, Greater than 15 Barrel Equivalents per Day per Well and Compressor Stations in the Production Segment (Located from the Wellhead to the Point of Custody Transfer to the Natural Gas Transmission and Storage Segment or Oil Pipeline)</u>: We recommend the implementation of a monitoring plan that includes semiannual monitoring using OGI and repair of components that are found to be leaking at well sites and compressor stations. We also recommend that each fugitive emissions component repaired or replaced be resurveyed to ensure there is no leak after

repair by the use of either Method 21 or OGI no later than 15 days of finding fugitive emissions.

9.5 Factors to Consider in Developing Fugitive Emissions RACT Procedures

To ensure that fugitive emissions are properly monitored and repaired (as necessary) under the RACT recommendations, we suggest that regulatory agencies specify OGI monitoring and equipment repair recordkeeping and reporting requirements to document compliance.

9.5.1 Monitoring Recommendations

We recommend that regulatory agencies require a fugitive emissions OGI monitoring plan that covers fugitive emission component sources that includes basic required monitoring plan elements. We recommend that regulatory agencies require both a corporate-wide and a site-specific fugitive emissions OGI monitoring plan that covers the collection of fugitive emissions components at well sites and compressor stations. Alternatively, regulatory agencies may decide to require a single OGI monitoring site-specific plan for each collection of fugitive emissions components at a well site and each collection of fugitive emissions components at a compressor station that covers the elements of both the corporate-wide and site-specific plans.

We suggest that the corporate-wide monitoring plan include the following minimum elements:

(1) Frequency for conducting surveys;
(2) Technique for determining fugitive emissions;
(3) Manufacturer and model number of fugitive emissions detection equipment to be used;
(4) Procedures and timeframes for identifying and repairing fugitive emissions components from which fugitive emissions are detected, including timeframes for fugitive emission components that are unsafe to repair;
(5) Procedures and timeframes for verifying fugitive emission component repairs;
(6) Records that will be kept and the length of time records will be kept;
(7) Verification that your optical gas imaging equipment meets the specification requirements;
(8) Procedure for a daily verification check;

(9) Procedure for determining the operator's maximum viewing distance from the equipment and how the operator will ensure that this distance is maintained;

(10) Procedure for determining maximum wind speed during which monitoring can be performed and how the operator will ensure monitoring occurs only at wind speeds below this threshold;

(11) Procedures for conducting surveys;

(12) Training and experience needed prior to performing surveys; and

(13) Procedures for calibration and maintenance.

(14) Procedures should comply with those recommended by the manufacturer.

We suggest that you require the following minimum elements for the site-specific monitoring plan:

(1) Deviations from your corporate-wide plan;

(2) Sitemap; and

(3) Defined walking path (to ensure that all fugitive emissions components are within sight of the path and accounts for interferences).

We recommend a monitoring survey of each collection of fugitive emissions components at a well site and collection of fugitive emissions components at a compressor station be conducted at least semiannually after the initial survey and that consecutive semiannual monitoring surveys be conducted at least four months apart. We recommend that the monitoring frequency be increased to quarterly in the event that two consecutive semiannual monitoring surveys detect fugitive emissions at 1.0 percent or more of the fugitive emissions components at a well site or at 1.0 percent or more of the fugitive emissions components at a compressor station. We also recommend that the monitoring frequency be decreased to annual in the event that two consecutive semiannual surveys detect fugitive emissions at less than 1.0 percent of the fugitive emissions components at a well site, or at less than 1.0 percent of the fugitive emissions components at a compressor station. We also recommend that you require that the monitoring frequency return to semiannual if an annual survey detects fugitive emissions between one and three percent of the fugitive emissions components at the well site, or between one and three percent of the fugitive emissions components at the compressor station, and return to quarterly if a survey detects fugitive emissions at greater than three percent of the fugitive emissions

components at the well site, or greater than three percent of the fugitive emissions components at the compressor station.

9.5.2 Repair Recommendations

We recommend that regulatory agencies require that any identified source of fugitive emissions be repaired or replaced as soon as practicable, but no later than 15 calendar days after detection of the fugitive emissions. If the repair or replacement is technically infeasible or unsafe to repair during operation of the unit, the repair or replacement must be completed during the next scheduled shutdown or within 6 months, whichever is earlier. We also recommend that repaired or replaced fugitive emission components be required to be resurveyed as soon as practicable, but no later than 15 days after completion of the repair or replacement, to ensure that there is no leak. For repairs that cannot be made during the monitoring survey when the fugitive emissions are initially found, we recommend that regulatory agencies require that the operator resurvey the repaired fugitive emissions components using either Method 21 or OGI no later than 15 days of finding such fugitive emissions. A fugitive emissions component is repaired when either the Method 21 instrument indicates a concentration of less than 500 ppm above background, or an OGI instrument shows no indication of visible emissions.

Appendix

We include modular rule language in this appendix for our recommended RACT for oil and natural gas industry sources. The intent of this language is to provide regulation language that states can easily adapt for use. Although we include model rule language for closed vent systems, control devices and performance tests (that apply across several model rule requirements for sources), it is acknowledged that states may have existing similar language in their programs that they may want to use in lieu of the model language provided.

The model rule language does not specify rule effective dates or compliance dates. These dates will be determined by the state or local government regulatory authority. State and local government agencies are encouraged to search this model rule language for places where the "regulatory authority" will need to specify dates (e.g., effective date, compliance date) by searching for ("regulatory authority") in the model rule language.

Appendix: Table of Contents

A Storage Vessels: VOC Emission Control Requirements A-1

A.1 Applicability A-1

A.2 What VOC Emission Control Requirements Apply to Storage Vessels? A-1

A.3 Initial Compliance Demonstration Requirements A-3

A.4 Continuous Compliance Demonstration Requirements A-4

A.5 Recordkeeping and Reporting Requirements A-8

A.6 Definitions A-10

B Pneumatic Controllers: VOC Emission Control Requirements B-1

B.1 Applicability B-1

B.2 What VOC Emission Control Requirements Apply to Pneumatic Controllers? B-1

B.3 Initial Compliance Demonstration Requirements B-2

B.4 Continuous Compliance Demonstration Requirements B-3

B.5 Recordkeeping and Reporting Requirements B-4

B.6 Definitions B-5

C Compressors: VOC Emissions Control Requirements C-1

C.1 Applicability C-1

C.2 What VOC Emission Control Requirements Apply to Centrifugal Compressors? C-1

C.3 What VOC Emission Control Requirements Apply to Reciprocating Compressors? .. C-2

C.4 Initial Compliance Demonstration Requirements C-3

C.5 Continuous Compliance Demonstration Requirements C-5

C.6 Recordkeeping and Reporting Requirements C-9

C.7 Definitions C-11

D Cover and Closed Vent System Requirements D-1

D.1 What Are My Cover and Closed Vent System Requirements? D-1

D.2 What Are My Initial and Continuous Cover and Closed Vent System Inspection and Monitoring Requirements? D-3

E VOC Emission Control Device Requirements E-1

E.1 Initial Control Device Compliance Requirements E-1

E.2 Continuous Control Device Monitoring Requirements E-5

F Performance Test Procedures F-1

G Equipment Component VOC Leaks at Natural Gas Processing Plants G-1

G.1 Applicability G-1

G.2 What VOC Emission Control Requirements Apply to Equipment Components at an Onshore Natural Gas Processing Plant? G-1

G.3 What Exceptions to the Equipment Leak VOC Emission Control Requirements Apply at Onshore Natural Gas Processing Plants? G-2

G.4 How Do I Demonstrate Initial and Continued Compliance with the VOC Emission Control Requirements for Equipment Components Subject to Control Requirements at Onshore Natural Gas Processing Plants? G-4

G.5 Equipment Component VOC Emission Control Requirements G-4

G.5.1 VOC Emission Control Requirements: General G-4

G.5.2 What Equipment Component VOC Emission Control Requirements that Apply to Pumps in Light Liquid Service? G-7

G.5.3 What are the Equipment Component VOC Emission Control Requirements that Apply to Compressors? G-11

G.5.4 What Equipment Component VOC Emission Control Requirements Apply to Pressure Relief Devices in Gas/Vapor Service? G-13

G.9.5 What Equipment Component VOC Emission Control Requirements Apply to Sampling Connection Systems? G-14

G.5.6 What Equipment Component VOC Emission Control Requirements Apply to Open-Ended Valves or Lines? G-15

G.5.7 What Equipment Component VOC Emission Control Requirements Apply to Valves in Gas/Vapor Service and in Light Liquid Service? G-16

G.5.8 What Equipment Component VOC Emission Control Requirements Apply to Pumps, Valves, and Connectors in Heavy Liquid Service and Pressure Relief Devices in Light Liquid or Heavy Liquid Service? G-19

G.5.9 What Delay of Repair of Equipment Components Requirements Apply When Equipment Component Leaks Have Been Detected? G-19

G.5.10 What VOC Emission Control Requirements Apply for Closed Vent Systems and Control Devices? G-21

G.5.11 What VOC Emission Control Requirements Apply to Connectors in Gas/Vapor Service and in Light Liquid Service? G-24

G.6 Alternative Standards G-28

G.6.1 Alternative Standards for Valves—Allowable Percentage of Valves Leaking ... G-28

G.6.2 Alternative Standards for Valves—Skip Period Leak Detection and Repair G-29

G.7 Equipment Leak Test Methods and Procedures G-30

G.8 Recordkeeping and Reporting Requirements G-35

G.9 Definitions G-44

H Pneumatic Pumps: VOC Emissions Control Requirements H-1
H.1 Applicability H-1
H.2 What VOC Emission Reduction Requirements Apply to Natural Gas-Driven Pneumatic Pumps? H-1
H.3 Initial Compliance Demonstration Requirements H-3
H.4 Continuous Compliance Demonstration Requirements H-4
H.5 Recordkeeping and Reporting Requirements H-7
H.6 Definitions H-9
I Fugitive Emissions Components VOC Emissions Control Requirements I-1
I.1 Applicability I-1
I.2 What VOC Emission Control Requirements Apply to the Collection of Fugitive Emission Components at a Well Site and a Compressor Station? I-1
I.3 Initial Compliance Demonstration I-5
I.4 Continuous Compliance Demonstration I-5
I.5 Recordkeeping and Reporting Requirements I-6
I.6 Definitions I-7

A Storage Vessels: VOC Emission Control Requirements

A.1 Applicability

(a) The VOC emissions control requirements of section A apply to each storage vessel located in the oil and natural gas industry (excluding distribution) that has the potential for VOC emissions equal to or greater than 6 tpy. The potential for VOC emissions must be calculated using a generally accepted model or calculation methodology, based on the maximum average daily throughput determined for a 30-day period of production prior to the applicable emission determination deadline established by your regulatory authority. The determination may take into account requirements under a legally and practically enforceable limit in an operating permit or other requirement established under a federal, state, local or tribal authority. Any vapor from the storage vessel that is recovered and routed to a process through a VRU designed and operated as specified in this section is not required to be included in the determination of VOC potential to emit for purposes of determining applicability, provided you comply with the requirements in section A.2.

(b) The storage vessel VOC emission control requirements specified in this section do not apply to storage vessels subject to and controlled in accordance with the requirements for storage vessels in 40 CFR part 60, subpart Kb, 40 CFR part 63, subparts G, CC, HH, or WW.

A.2 What VOC Emission Control Requirements Apply to Storage Vessels?

For each storage vessel, you must comply with the VOC emissions control requirements of paragraphs (a) through (e) in this section by the compliance date established by your regulatory authority. Requirements for storage vessels removed from service are presented in paragraph (f) of this section.

(a) You must reduce VOC emissions from each storage vessel by 95 percent.

(b) (1) Except as required in paragraph (b)(2) of this section, if you use a control device to reduce emissions, you must equip the storage vessel with a cover that meets the requirement

of section D.1(a), that is connected through a closed vent system that meets the requirements of section D.1(b) and routed to a control device that meets the conditions specified in paragraph (b)(3)(i) and (ii) of this section. As an alternative to routing the closed vent system to a control device, you may route the closed vent system to a process.

(2) If you use a floating roof to reduce emissions, you must meet the requirements of 40 CFR 60.112b(a)(1) or (2) and the relevant monitoring, inspection, recordkeeping, and reporting requirements in 40 CFR part 60, subpart Kb.

(3) (i) For each control device used to meet the VOC emission reduction control requirements in paragraph (a), you must comply with the applicable control device compliance requirements of section E.1(d) and install and operate a continuous parameter monitoring system for each control device as specified in section E.2(c) through (f), except as provided for in section E.2(b).

(ii) You must operate each control device used to comply with this rule at all times when gases, vapors, and fumes are vented from your storage vessel through a closed vent system to a control device. You may vent more than one source to a control device.

(c) You must demonstrate initial compliance with the VOC emission reduction requirements that apply to each storage vessel as required in section A.3.

(d) You must demonstrate continuous compliance with the VOC emission control requirements that apply to each storage vessel as required by section A.4.

(e) You must perform the required recordkeeping and reporting as required by section A.5.

(f) *Requirements for storage vessels that are removed from service or returned to service.* If you are the owner or operator of a storage vessel subject to the VOC emission control requirements that is removed from service, you must comply with paragraphs (f)(1) through (3) of this section. A storage vessel is not an affected source under this section for the period that it is removed from service.

(1) For a storage vessel to be removed from service, you must comply with the requirements of paragraph (f)(1)(i) and (ii) of this section.

(i) You must completely empty and degas the storage vessel, such that the storage vessel no longer contains crude oil, condensate, produced water or intermediate hydrocarbon liquids. A storage vessel where liquid is left on walls, as bottom clingage or in pools due to floor irregularity is considered to be completely empty.

(ii) You must submit a notification in your next annual report, identifying all storage vessels removed from service during the reporting period and the date of its removal from service.

(2) If the storage vessel subject to VOC emission control requirements identified in paragraph (f)(1) of this section is returned to service during the reporting year, you must comply with paragraphs (f)(3) of this section.

(3) You must submit a notification in your next annual report identifying each storage vessel that has been returned to service and the date of its return to service.

A.3 Initial Compliance Demonstration Requirements

You must demonstrate initial compliance by the compliance date specified by your regulatory authority by demonstrating compliance with the VOC emission control requirements for each storage vessel complying with section A.2 by complying with the requirements in paragraphs (a) through (g) of this section.

(a) You determine the potential VOC emission rate as specified in section A.1(a).

(b) You reduce VOC emissions from each storage vessel subject to VOC emission control requirements by 95 percent or greater as required in section A.2 and as demonstrated by section F.

(c) If you use a control device to reduce emissions, you equip your storage vessel with a cover that meets the requirements of section D.1(a) that is connected through a closed vent system that meets the requirements of section D.1(b) and is routed to a control device that meets

the requirements of section E.1. As an alternative to routing the closed vent system to a control device, you may route the closed vent system to a process.

(d) You conduct an initial performance test as required in section F within 180 days after the effective date of this rule, as established by your regulatory authority.

(e) You conduct the initial cover and closed vent system inspections required in section D.2 within 180 days after the effective date of this rule as established by your regulatory authority.

(f) You submit the initial annual report for your storage vessels as required in section A.5(b).

(g) You maintain the records as specified in section A.5(a).

A.4 Continuous Compliance Demonstration Requirements

You have demonstrated continuous compliance for each storage vessel subject to the VOC emission control requirements in section A.2 by meeting the requirements in paragraphs (a) through (c) of this section.

(a) For each storage vessel subject to VOC emission reduction requirements, you must demonstrate continuous compliance according to paragraphs (b) and (c) of this section.

(b) You must reduce VOC emissions from the storage vessel by 95 percent or greater.

(c) For each control device used to reduce emissions, you must demonstrate continuous compliance with the performance requirements of section A.2(a) using the procedures specified in paragraphs (c)(1) through (7) of this section, as applicable. If you use a condenser as the control device to achieve the requirements specified in section A.2(a), you demonstrate compliance according to paragraph (c)(8) of this section. You may switch between compliance with paragraphs (c)(1) through (7) of this section and compliance with paragraph (c)(8) of this section only after at least 1 year of operation in compliance with the selected approach. You

must provide notification of such a change in the compliance method in the next annual report, as required in section A.5(b), following the change.

(1) You must operate below (or above) the site specific maximum (or minimum) parameter value established according to the requirements of section E.2(f)(1).

(2) You must calculate the daily average of the applicable monitored parameter in accordance with section E.2(e) except that the inlet gas flow rate to the control device must not be averaged.

(3) Compliance with the operating parameter limit is achieved when the daily average of the monitoring parameter value calculated under paragraph (c)(2) of this section is either equal to or greater than the minimum monitoring value or equal to or less than the maximum monitoring value established under paragraph (c)(1) of this section. When performance testing of a combustion control device is conducted by the device manufacturer as specified in section F(d), compliance with the operating parameter limit is achieved when the criteria in section F(e) are met.

(4) You must operate the continuous monitoring system required in section E.2(a) at all times the source is operating, except for periods of monitoring system malfunctions, repairs associated with monitoring system malfunctions, and required monitoring system quality assurance or quality control activities (including, as applicable, system accuracy audits and required zero and span adjustments). A monitoring system malfunction is any sudden, infrequent, not reasonably preventable failure of the monitoring system to provide valid data. Monitoring system failures that are caused in part by poor maintenance or careless operation are not malfunctions. You are required to complete monitoring system repairs in response to monitoring system malfunctions and to return the monitoring system to operation as expeditiously as practicable.

(5) You may not use data recorded during monitoring system malfunctions, repairs associated with monitoring system malfunctions, or required monitoring system quality assurance or control activities in calculations used to report emissions or operating levels. You

must use all the data collected during all other required data collection periods to assess the operation of the control device and associated control system.

(6) Failure to collect required data is a deviation of the monitoring requirements, except for periods of monitoring system malfunctions, repairs associated with monitoring system malfunctions, and required quality monitoring system quality assurance or quality control activities (including, as applicable, system accuracy audits and required zero and span adjustments).

(7) If you use a combustion control device to meet the requirements of section A.2(a) and you demonstrate compliance using the test procedures specified in section F(b), you must comply with paragraphs (c)(7)(i) through (iv) of this section.

(i) A pilot flame must be present at all times of operation.

(ii) Devices must be operated with no visible emissions, except for periods not to exceed a total of one minute during any 15 minute period. A visible emissions test using section 11 of Method 22, 40 CFR part 60, appendix A, must be performed at least once every calendar month, separated by at least 15 days between each test. The observation period shall be 15 minutes.

(iii) Devices failing the visible emissions test must follow manufacturer's repair instructions, if available, or best combustion engineering practice as outlined in the unit inspection and maintenance plan, to return the unit to compliant operation. All inspection, repair and maintenance activities for each unit must be recorded in a maintenance and repair log and must be available for inspection.

(iv) Following return to operation from maintenance or repair activity, each device must pass a Method 22, 40 CFR part 60, appendix A, visual observation as described in paragraph (c)(2)(vii)(B) of this section.

(8) If you use a condenser as the control device to achieve the percent reduction performance requirements specified in section A.2(a), you must demonstrate compliance using the procedures in paragraphs (c)(8)(i) through (v) of this section.

(i) You must establish a site-specific condenser performance curve according to section E.2(f)(2).

(ii) You must calculate the daily average condenser outlet temperature in accordance with section E.2(e).

(iii) You must determine the condenser efficiency for the current operating day using the daily average condenser outlet temperature calculated under paragraph (c)(8)(ii) of this section and the condenser performance curve established under paragraph (c)(8)(i) of this section.

(iv) You must calculate the 365-day rolling average TOC emission reduction, as appropriate, from the condenser efficiencies as determined in paragraph (c)(8)(iii) of this section.

(A) If you have less than 120 days of data for determining average TOC emission reduction, you must calculate the average TOC emission reduction for the first 120 days of operation. You have demonstrated compliance with the overall 95 percent reduction requirement if the 120-day average TOC emission reduction is equal to or greater than 95 percent.

(B) After 120 days and no more than 364 days of operation, you must calculate the average TOC emission reduction as the TOC emission reduction averaged over the number of days of operation where you have data. You have demonstrated compliance with the overall 95 percent reduction requirement, if the average TOC emission reduction is equal to or greater than 95 percent.

(v) If you have data for 365 days or more of operation, you have demonstrated compliance with the TOC emission reduction if the rolling 365-day average TOC emission reduction calculated in paragraph (c)(8)(4) of this section is equal to or greater than 95 percent.

(d) You must submit the annual report required by section A.5(b) and maintain the records as specified in section A.5(a).

A.5 Recordkeeping and Reporting Requirements

(a) *Recordkeeping requirements.* For each storage vessel, you must maintain the records identified in paragraphs (a)(1) through (11) of this section, as applicable, either onsite or at the nearest local field office for at least five years.

(1) If required to reduce emissions by complying with section A.2(a), the records specified in paragraphs (a)(6) through (8) of this section and section D.2, as applicable.

(2) Records of each VOC emissions determination for each storage vessel made under A.1(a) including identification of the model or calculation methodology used to calculate the VOC emission rate.

(3) Records of deviations in cases where the storage vessel was not operated in compliance with the requirements specified in sections A.2, D, E and F, as applicable.

(4) For storage vessels that are skid-mounted or permanently attached to something that is mobile (such as trucks, railcars, barges or ships), records indicating the number of consecutive days that the vessel is located at a site in the oil and natural gas production segment, natural gas processing segment or natural gas transmission and storage segment. If a storage vessel is removed from a site and, within 30 days, is either returned to or replaced by another storage vessel at the site to serve the same or similar function, then the entire period since the original storage vessel was first located at the site, including the days when the storage vessel was removed, must be added to the count towards the number of consecutive days.

(5) Records of the identification and location of each storage vessel subject to emission control requirements.

(6) Records of each closed vent system inspection required under section D.2(a) and (b).

(7) A record of each cover inspection required under section D.2(c).

(8) If you are subject to the bypass requirements of section D.2(d), a record of each inspection or a record each time the key is checked out or a record of each time the alarm is sounded.

(9) For each carbon adsorber installed on a storage vessel, records of the schedule for carbon replacement (as determined by the design analysis requirements of section E.1(a)(2)) and records of each carbon replacement as specified in section E.1(c)(1).

(10) For each storage vessel subject to the control device requirements of section E.2(c) and (d), records of the inspections, including any corrective actions taken, the manufacturers' operating instructions, procedures and maintenance schedule as specified in section E.2(h). Records of section 11, EPA Method 22, 40 CFR part 60, appendix A results, which include: company, location, company representative (name of the person performing the observation), sky conditions, process unit (type of control device), clock start time, observation period duration (in minutes and seconds), accumulated emission time (in minutes and seconds), and clock end time. You may create your own form including the above information or use Figure 22-1 in EPA Method 22, 40 CFR part 60, appendix A. Control device manufacturer operating instructions, procedures and maintenance schedule must be available for inspection.

(11) A log of records for all inspection, repair and maintenance activities for each control device failing the visible emissions test as specified in section A.4(c)(7(iii).

(b) *Reporting requirements*. For storage vessels, you must submit annual reports containing the information specified in paragraphs (b)(1) through (6) of this section.

(1) An identification, including the location, of each storage vessel subject to VOC emission control requirements. The location of the storage vessel shall be in latitude and longitude coordinates in decimal degrees to an accuracy and precision of five (5) decimals of a degree using the North American Datum of 1983.

(2) Documentation of the VOC emission rate determination according to section A.1(a).

(3) Records of deviations specified in paragraph (a)(3) of this section that occurred during the reporting period.

(4) A statement that you have met the requirements specified in section A.3(b) and (c).

(5) You must identify each storage vessel that is removed from service during the reporting period as specified in section A.2(f)(1), including the date the storage vessel was removed from service.

(6) You must identify each storage vessel returned to service during the reporting period as specified in section A.2(f)(3), including the date the storage vessel was returned to service..

A.6 Definitions

Condensate means hydrocarbon liquid separated from natural gas that condenses due to changes in the temperature, pressure, or both, and remains liquid at standard conditions.

Gas processing plant process unit means equipment assembled for the extraction of natural gas liquids from field gas, the fractionation of the liquids into natural gas products, or other operations associated with the processing of natural gas products. A process unit can operate independently if supplied with sufficient feed or raw materials and sufficient storage facilities for the products.

Natural gas processing plant (gas plant) means any processing site engaged in the extraction of natural gas liquids from field gas, fractionation of mixed natural gas liquids to natural gas products, or both. A Joule-Thompson valve, a dew point depression valve, or an isolated or standalone Joule-Thompson skid is not a natural gas processing plant.

Natural gas transmission means the pipelines used for the long distance transport of natural gas (excluding processing). Specific equipment used in natural gas transmission includes the land, mains, valves, meters, boosters, regulators, storage vessels, dehydrators, compressors, and their driving units and appurtenances, and equipment used for transporting gas from a production plant, delivery point of purchased gas, gathering system, storage area, or other wholesale source of gas to one or more distribution area(s).

Pressure vessel means a storage vessel that is used to store liquids or gases and is designed not to vent to the atmosphere as a result of compression of the vapor headspace in the pressure vessel during filling of the pressure vessel to its design capacity.

Produced water means water that is extracted from the earth from an oil or natural gas well, or that is separated from crude oil, condensate, or natural gas after extraction.

Removed from service means that a storage vessel subject to the VOC control requirements has been physically isolated and disconnected from the process for a purpose other than maintenance.

Returned to service means that a storage vessel subject to the VOC requirements that was removed from service has been:

(1) Reconnected to the original source of liquids or has been used to replace any storage vessel subject to the VOC requirements; or

(2) Installed in any location covered by this rule and introduced with crude oil, condensate, intermediate hydrocarbon liquids or produced water.

Routed to a process or route to a process means the emissions are conveyed via a closed vent system to any enclosed portion of a process where the emissions are predominantly recycled and/or consumed in the same manner as a material that fulfills the same function in the process and/or transformed by chemical reaction into materials that are not regulated materials and/or incorporated into a product; and/or recovered. Salable quality gas means natural gas that meets the flow line or collection system operator specifications, regardless of whether such gas is sold.

Storage vessel means a tank or other vessel that contains an accumulation of crude oil, condensate, intermediate hydrocarbon liquids, or produced water, and that is constructed primarily of nonearthen materials (such as wood, concrete, steel, fiberglass, or plastic) which provide structural support. A well completion vessel that receives recovered liquids from a well after startup of production following flowback for a period which exceeds 60 days is considered a storage vessel under this rule. A tank or other vessel shall not be considered a storage vessel if it has been removed from service in accordance with the requirements of (f)(2) of this section

until such time as such tank or other vessel has been returned to service. For the purposes of this rule, the following are not considered storage vessels:

(1) Vessels that are skid-mounted or permanently attached to something that is mobile (such as trucks, railcars, barges or ships), and are intended to be located at a site for less than 180 consecutive days. If you do not keep or are not able to produce records, as required by section A.5(a)(4), showing that the vessel has been located at a site for less than 180 consecutive days, the vessel described herein is considered to be a storage vessel from the date the original vessel was first located at the site. This exclusion does not apply to a well completion vessel as described above.

(2) Process vessels such as surge control vessels, bottoms receivers or knockout vessels.

(3) Pressure vessels designed to operate in excess of 204.9 kilopascals and without emissions to the atmosphere.

Underground storage vessel means a storage vessel stored below ground.

B Pneumatic Controllers: VOC Emission Control Requirements

B.1 Applicability

The VOC emission control requirements specified in section B.2 apply to the pneumatic controllers specified in paragraphs (a) and (b) of this section.

(a) For natural gas processing plants, each pneumatic controller, which is a single continuous bleed natural gas-driven pneumatic controller.

(b) For each pneumatic controller located from the wellhead to the natural gas processing plant or point of custody transfer to an oil pipeline, which is a single continuous bleed natural gas-driven pneumatic controller operating at a natural gas bleed rate greater than 6 standard cubic feet per hour.

B.2 What VOC Emission Control Requirements Apply to Pneumatic Controllers?

For each pneumatic controller, you must comply with requirements based on natural gas as a surrogate for VOC, as specified in either paragraph (b)(1) or (c)(1) of this section, as applicable. Pneumatic controllers meeting the conditions in paragraph (a) of this section are exempt from these requirements.

(a) The requirements of paragraph (b)(1) or (c)(1) of this section are not required if you determine that the use of a pneumatic controller with a bleed rate greater than 6 standard cubic feet per hour is required based on functional needs, including but not limited to response time, safety and positive actuation. However, you must tag such pneumatic controller with the date that the pneumatic controller is required to comply with the model rule (as established by your regulatory authority) that allows traceability to the records for that pneumatic controller, as required in section B.5(a)(2).

(b)(1) Each pneumatic controller subject to VOC emissions control requirements at a natural gas processing plant must have a bleed rate of zero.

(2) Each pneumatic controller subject to VOC emissions control requirements at a natural gas processing plant must be tagged with the date that the pneumatic controller is required to comply with the model rule (as established by your regulatory authority) that allows traceability to the records for that pneumatic controller as required in section B.5(a)(4)

(c)(1) Each pneumatic controller subject to VOC emissions control requirements at a location between the wellhead and a natural gas processing plant or the point of custody transfer to an oil pipeline must have a bleed rate less than or equal to 6 standard cubic feet per hour.

(2) Each pneumatic controller subject to VOC emission control requirements at a location between the wellhead and a natural gas processing plant or the point of custody transfer to an oil pipeline must be tagged with the date that the pneumatic controller is required to comply with the model rule (as established by your regulatory authority) that allows traceability to the records for that controller as required in section B.5(a)(3).

(d) You must demonstrate initial compliance by the compliance date specified by your regulatory authority by demonstrating compliance with the VOC emission reduction requirements that apply to pneumatic controllers as required by section B.3.

(e) You must demonstrate continuous compliance with VOC emission reduction requirements that apply to pneumatic controllers as required by section B.4.

(f) You must perform the required recordkeeping and reporting as required by section B.5.

B.3 Initial Compliance Demonstration Requirements

You must demonstrate initial compliance with the VOC emission control requirements for your pneumatic controller by complying with the requirements specified in paragraphs (a) through (f) of this section by the compliance date specified by your regulatory authority, as applicable.

(a) You must demonstrate initial compliance by maintaining records as specified in section B.5(a)(2) of your determination that the use of a pneumatic controller with a bleed rate greater than 6 standard cubic feet of gas per hour is required as specified in section B.2(a).

(b) You own or operate a pneumatic controller located at a natural gas processing plant and your pneumatic controller is driven by a gas other than natural gas and therefore emits zero natural gas.

(c) You own or operate a pneumatic controller located between the wellhead and a natural gas processing plant and the manufacturer's design specifications indicate that the controller emits less than or equal to 6 standard cubic feet of gas per hour.

(d) You must tag each pneumatic controller according to the requirements of section B.2(b)(2) or (c)(2).

(e) You must include the information in paragraph (a) of this section and a listing of the pneumatic controller sources specified in paragraphs (b) and (c) of this section in the initial annual report according to the requirements of section B.5(b)

(f) You must maintain the records as specified in section B.5(a) for each pneumatic controller subject to VOC emission control requirements.

B.4 Continuous Compliance Demonstration Requirements

For each pneumatic controller, you must demonstrate continuous compliance according to paragraphs (a) through (c) of this section.

(a) You must continuously operate each pneumatic controller as required in section B.2(a), (b), or (c).

(b) You must submit the annual report as required in section B.5(b).

(c) You must maintain records as required in section B.5(a).

B.5 Recordkeeping and Reporting Requirements

(a) *Recordkeeping requirements*. For each pneumatic controller, you must maintain the records identified in paragraphs (a)(1) through (5) of this section onsite or at the nearest local field office for at least five years.

(1) Records of the date, location and manufacturer specifications for each pneumatic controller.

(2) If applicable, a record of the demonstration that the use of a pneumatic controller with a natural gas bleed rate greater than 6 standard cubic feet per hour is required and the reasons why.

(3) If the pneumatic controller is not located at a natural gas processing plant, records of the manufacturer's specifications indicating that the controller is designed such that natural gas bleed rate is less than or equal to 6 standard cubic feet per hour.

(4) If the pneumatic controller is located at a natural gas processing plant, records of the documentation that the natural gas bleed rate is zero.

(5) Records of deviations in cases where the pneumatic controller was not operated in compliance with the requirements specified in section B.2.

(b) *Reporting requirements*. You must submit annual reports containing the information specified in paragraphs (b)(1) through (3) of this section.

(1) An identification of each existing pneumatic controller and each pneumatic controller constructed, modified or reconstructed during the reporting period, including the identification information specified in section B.2(b)(2) or (c)(2).

(2) If applicable, documentation that the use of a pneumatic controller with a natural gas bleed rate greater than 6 standard cubic feet per hour is required and the reasons why.

(3) Records of deviations specified in paragraph (a)(5) of this section that occurred during the reporting period.

B.6 Definitions

Bleed rate means the rate in standard cubic feet per hour at which natural gas is continuously vented (bleeds) from a pneumatic controller.

Continuous bleed means a continuous flow of pneumatic supply natural gas to the process control device (e.g., level control, temperature control, pressure control) where the supply gas pressure is modulated by the process condition, and then flows to the valve controller where the signal is compared with the process set-point to adjust gas pressure in the valve actuator.

Intermittent/snap-action pneumatic controller means a pneumatic controller that vents non-continuously.

Natural gas-driven pneumatic controller means a pneumatic controller powered by pressurized natural gas.

Natural gas processing plant (gas plant) means any processing site engaged in the extraction of natural gas liquids from field gas, fractionation of mixed natural gas liquids to natural gas products, or both. A Joule-Thompson valve, a dew depression valve, or a standalone Joule-Thompson skid is not a natural gas processing plant.

Non-natural gas-driven pneumatic controller means an instrument that is actuated using other sources of power than pressurized natural gas; examples include solar, electric, and instrument air.

Pneumatic controller means an automated instrument used for maintaining a process condition such as liquid level, pressure, delta-pressure and temperature.

C Compressors: VOC Emissions Control Requirements

C.1 Applicability

(a) *Centrifugal compressors*. Each centrifugal compressor, which is a single centrifugal compressor using wet seals located between the wellhead and point of custody transfer to the natural gas transmission and storage segment. A centrifugal compressor located at a well site, or an adjacent well site and servicing more than one well site, is not a source subject to VOC requirements under this rule.

(b) *Reciprocating compressors*. Each reciprocating compressor located between the wellhead and point of custody transfer to the natural gas transmission and storage segment. A reciprocating compressor located at a well site, or an adjacent well site and servicing more than one well site, is not a source subject to VOC requirements under this rule.

C.2 What VOC Emission Control Requirements Apply to Centrifugal Compressors?

For each centrifugal compressor, you must comply with the VOC emissions control requirements in paragraphs (a) through (g).

(a) You must reduce VOC emissions from each centrifugal compressor wet seal fluid degassing system by 95.0 percent or greater.

(b) If you use a control device to reduce emissions, you must equip the wet seal fluid degassing system with a cover that meets the requirements of section D.1(a). The cover must be connected through a closed vent system that meets the requirements of section D.1(b) and the closed vent system must be routed to a control device that meets the conditions specified in paragraph (c) of this section. As an alternative to routing the closed vent system to a control device, you may route the closed vent system to a process.

(c) For each control device used to comply with the VOC emission reduction control requirements in paragraph (a), you must install and operate a continuous parameter monitoring system for each control device as specified in section E.2(a) through (f), except as provided for in section E.2(b).

(d) You must operate each control device installed on your centrifugal compressor in accordance with the requirements specified in paragraphs (d)(1) and (2) of this section.

(1) You must operate each control device used to comply with this rule at all times when gases, vapors, and fumes are vented from the wet seal fluid degassing system through the closed vent system to the control device. You may vent more than one source to a single control device.

(2) For each control device monitored in accordance with the requirements of section E.2(a) through (f), you must demonstrate continuous compliance according to the requirements of section C.5(a)(2), as applicable.

(e) You must demonstrate initial compliance with the VOC emission reduction requirements that apply to each centrifugal compressor as required by section C.4(a).

(f) You must demonstrate continuous compliance with the VOC emission control requirements that apply to each centrifugal compressor as required by section C.5(a).

(g) You must perform the required recordkeeping and reporting as required by section C.6(a)(1) and (b)(1), as applicable.

C.3 What VOC Emission Control Requirements Apply to Reciprocating Compressors?

You must comply with the VOC emission control requirements in paragraphs (a) through (d) of this section for each reciprocating compressor.

(a) You must replace the reciprocating compressor rod packing according to either paragraph (a)(1) or (2) of this section or you must comply with paragraph (a)(3) of this section.

(1) Before the compressor has operated for 26,000 hours. The number of hours of operation must be continuously monitored beginning on the compliance date for your reciprocating compressor as specified by your regulatory authority, or the date of the most recent reciprocating compressor rod packing replacement, whichever is later.

(2) Prior to 36 months from the date of the most recent rod packing replacement, or 36 months from the compliance date for a reciprocating compressor for which the rod packing has not yet been replaced.

(3) Collect the VOC emissions from the rod packing using a rod packing emissions collection system which operates under negative pressure and route the rod packing emissions to a process through a closed vent system that meets the requirements of section D.1(b).

(b) You must demonstrate initial compliance with requirements that apply to reciprocating compressor sources as required by section C.4(b).

(c) You must demonstrate continuous compliance with requirements that apply to reciprocating compressor sources as required by section C.5(b).

(d) You must perform the required recordkeeping and reporting as required by section C.6(a)(2) and (b)(2).

C.4 Initial Compliance Demonstration Requirements

You must demonstrate initial compliance by the compliance date specified by your regulatory authority by demonstrating compliance with the VOC emission control requirements for each centrifugal compressor by complying with the requirements in paragraph (a) of this section, and for each reciprocating compressor by complying with the requirements in paragraph (b) of this section.

(a) *Centrifugal compressors*. You have achieved initial compliance with the VOC emission control requirements for each centrifugal compressor if you have complied with paragraphs (a)(1) through (6) of this section.

(1) You reduce VOC emissions from each centrifugal compressor wet seal fluid degassing system by 95 percent or greater as required in section C.2 and as demonstrated by section F.

(2) You use a control device to reduce emissions, and you equip the wet seal fluid degassing system with a cover that meet the requirements of section D.1(a) that is connected through a closed vent system that meets the requirements of section D.1(b) and is routed to a control device that meets the requirements of section E.1. As an alternative to routing the closed vent system to a control device, you may route the closed vent system to a process.

(3) You conduct an initial performance test as required in section F within 180 days after the effective date specified by your regulatory authority.

(4) You conduct the initial cover and closed vent system inspections required in section D.2 within 180 days after the effective date specified by your regulatory authority.

(5) You submit the initial annual report for your centrifugal compressor as required in section C.6(b)(1).

(6) You maintain the records as specified in section C.6(a)(1)

(b) *Reciprocating compressors*. You have achieved initial compliance with the VOC emission control requirements for each reciprocating compressor if you have complied with paragraphs (b)(1) through (4) of this section.

(1) If complying with section C.3(a)(1) and (2), you must continuously monitored the number of hours of operation or tracked the number of months since the last rod packing replacement, beginning on the compliance date specified by your regulatory authority.

(2) If complying with section C.3(a)(3), you must operate the rod packing emissions collection system under negative pressure and route emissions to a process through a closed vent system that meets the requirements of section D.1(b) by the compliance date specified by your regulatory authority.

(3) You must submit the initial annual report for your reciprocating compressor as required in section C.6(b)(2).

(4) You maintain the records as specified in section C.6(a)(2).

C.5 Continuous Compliance Demonstration Requirements

You have demonstrated continuous compliance for each centrifugal compressor by complying with the requirements of paragraph (a), and for each reciprocating compressor by complying with the requirements of paragraph (b).

(a) *Centrifugal compressors*. For each centrifugal compressor subject to VOC emission reduction requirements, you must demonstrate continuous compliance according to paragraphs (a)(1) through (3) of this section.

(1) You must reduce VOC emissions from the wet seal fluid degassing system by 95.0 percent or greater.

(2) For each control device used to reduce emissions, you must demonstrate continuous compliance with the performance requirements of section C.2(a) using the procedures specified in paragraphs (a)(2)(i) through (vii) of this section. If you use a condenser as the control device to achieve the requirements specified in section C.2(a), you must demonstrate compliance according to paragraph (a)(2)(viii) of this section. You may switch between compliance with paragraphs (a)(2)(i) through (vii) of this section and compliance with paragraph (a)(2)(viii) of this section only after at least 1 year of operation in compliance with the selected approach. You must provide notification of such a change in the compliance method in the next annual report, as required in section C.6(b), following the change.

(i) You must operate below (or above) the site specific maximum (or minimum) parameter value established according to the requirements of section E.2(f)(1).

(ii) You must calculate the daily average of the applicable monitored parameter in accordance with section E.2(e) except that the inlet gas flow rate to the control device must not be averaged.

(iii) Compliance with the operating parameter limit is achieved when the daily average of the monitoring parameter value calculated under paragraph (a)(2)(ii) of this section is either equal to or greater than the minimum monitoring value or equal to or less than the maximum monitoring value established under paragraph (a)(2)(i) of this section. When performance testing of a combustion control device is conducted by the device manufacturer as specified in section F(d), compliance with the operating parameter limit is achieved when the criteria in section F(e) are met.

(iv) You must operate the continuous monitoring system required in section E.2(a) at all times the source is operating, except for periods of monitoring system malfunctions, repairs associated with monitoring system malfunctions, and required monitoring system quality assurance or quality control activities (including, as applicable, system accuracy audits and required zero and span adjustments). A monitoring system malfunction is any sudden, infrequent, not reasonably preventable failure of the monitoring system to provide valid data. Monitoring system failures that are caused in part by poor maintenance or careless operation are not malfunctions. You are required to complete monitoring system repairs in response to monitoring system malfunctions and to return the monitoring system to operation as expeditiously as practicable.

(v) You may not use data recorded during monitoring system malfunctions, repairs associated with monitoring system malfunctions, or required monitoring system quality assurance or control activities in calculations used to report emissions or operating levels. You must use all the data collected during all other required data collection periods to assess the operation of the control device and associated control system.

(vi) Failure to collect required data is a deviation of the monitoring requirements, except for periods of monitoring system malfunctions, repairs associated with monitoring system malfunctions, and required quality monitoring system quality assurance or quality control activities (including, as applicable, system accuracy audits and required zero and span adjustments).

(vii) If you use a combustion control device to meet the requirements of section C.2(a) and you demonstrate compliance using the test procedures specified in section F(b), you must comply with paragraphs (a)(2)(vii)(A) through (D) of this section.

(A) A pilot flame must be present at all times of operation.

(B) Devices must be operated with no visible emissions, except for periods not to exceed a total of one minute during any 15-minute period. A visible emissions test using section 11 of Method 22, 40 CFR part 60, appendix A, must be performed at least once every calendar month, separated by at least 15 days between each test. The observation period shall be 15 minutes.

(C) Devices failing the visible emissions test must follow manufacturer's repair instructions, if available, or best combustion engineering practice as outlined in the unit inspection and maintenance plan, to return the unit to compliant operation. All inspection, repair and maintenance activities for each unit must be recorded in a maintenance and repair log and must be available for inspection.

(D) Following return to operation from maintenance or repair activity, each device must pass a Method 22, 40 CFR part 60, appendix A, visual observation as described in paragraph (a)(2)(vii)(B) of this section.

(viii) If you use a condenser as the control device to achieve the percent reduction performance requirements specified in section C.2(a)(1), you must demonstrate compliance using the procedures in paragraphs (a)(2)(viii)(A) through (E) of this section.

(A) You must establish a site-specific condenser performance curve according to section E.2(f)(2).

(B) You must calculate the daily average condenser outlet temperature in accordance with section E.2(e).

(C) You must determine the condenser efficiency for the current operating day using the daily average condenser outlet temperature calculated under paragraph (a)(2)(viii)(B) of this

section and the condenser performance curve established under paragraph (a)(2)(viii)(A) of this section.

(D) You must calculate the 365-day rolling average TOC emission reduction, as appropriate, from the condenser efficiencies as determined in paragraph (a)(2)(viii)(C) of this section.

(1) If you have less than 120 days of data for determining average TOC emission reduction, you must calculate the average TOC emission reduction for the first 120 days of operation. You have demonstrated compliance with the overall 95.0 percent reduction requirement if the 120-day average TOC emission reduction is equal to or greater than 95.0 percent.

(2) After 120 days and no more than 364 days of operation, you must calculate the average TOC emission reduction as the TOC emission reduction averaged over the number of days of operation where you have data. You have demonstrated compliance with the overall 95.0 percent reduction requirement, if the average TOC emission reduction is equal to or greater than 95.0 percent.

(E) If you have data for 365 days or more of operation, you have demonstrated compliance with the TOC emission reduction if the rolling 365-day average TOC emission reduction calculated in paragraph (a)(2)(viii)(D) of this section is equal to or greater than 95.0 percent.

(3) You must submit the annual report required by section C.6(b)(1) and maintain the records as specified in section C.6(a)(1).

(b) *Reciprocating compressors*. For each reciprocating compressor subject to VOC emission reduction requirements, you must demonstrate continuous compliance according to paragraphs (b)(1) through (4) of this section.

(1) You must continuously monitor the number of hours of operation for each reciprocating compressor or track the number of months or the date of the most recent

reciprocating compressor rod packing replacement, whichever is later, beginning on the compliance date.

(2) You must submit the annual report as required in section C.6(b)(2) and maintain records as required in section C.6(a)(2).

(3) You must replace the reciprocating compressor rod packing before the total number of hours of operation reaches 26,000 hours or the number of months since the most recent rod packing replacement reaches 36 months.

(4) If you comply with this rule by collecting and routing VOC emissions from the rod packing using a rod packing emissions collection system which operates under negative pressure as required by section C.3(a)(3), you must operate the rod packing emissions collection system under negative pressure and route emissions to a process through a closed vent system that meets the requirements of section D.1(b).

C.6 Recordkeeping and Reporting Requirements

(a) *Recordkeeping requirements*.

(1) *Centrifugal compressors*. For each centrifugal compressor, you must maintain records of the information specified in paragraphs (a)(1)(i) and (ii) of this section, and, if required to comply with section C.2(a), the records specified in paragraphs (a)(1)(iii) through (ix) of this section. These records must be maintained onsite or at the nearest local field office for at least five years.

(i) An identification of each existing centrifugal compressor using a wet seal system and each centrifugal compressor constructed, modified or reconstructed during the reporting period.

(ii) Records of deviations where the centrifugal compressor was not operated in compliance with requirements specified in section C.2.

(iii) Records of each closed vent system inspection required under section D.2(a) and (b).

(iv) A record of each cover inspection required under section D.2(c).

(v) If you are subject to the bypass requirements of section D.2(d), a record of each inspection or a record each time the key is checked out or a record of each time the alarm is sounded.

(vi) If you are subject to the closed vent system no detectable emissions requirements of section D.2(a) and (b), a record of the monitoring in accordance with section D.2(e).

(vii) For each centrifugal compressor, records of the schedule for carbon replacement (as determined by the design analysis requirements of section F(c)(2) or (3)) and records of each carbon replacement as specified in section E.1(c)(1).

(viii) For each centrifugal compressor subject to the control device requirements of section X.E.1, records of minimum and maximum operating parameter values, continuous parameter monitoring system data, calculated averages of continuous parameter monitoring system data, results of all compliance calculations, and results of all inspections.

(ix) A log of records for all inspection, repair and maintenance activities for each control device failing the visible emissions test as specified in section C.5(a)(2)(vii)(C).

(2) *Reciprocating compressors*. For each reciprocating compressor VOC emissions source, you must maintain the records in paragraphs (a)(2)(i) through (iii) of this section.

(i) Records of the cumulative number of hours of operation or number of months since the previous replacement of the reciprocating compressor rod packing, or date of installation of a rod packing emissions collection system and closed vent system as specified in section C.3(a)(3)..

(ii) Records of the date and time of each reciprocating compressor rod packing replacement.

(iii) Records of deviations in cases where the reciprocating compressor was not operated in compliance with the requirements specified in section C.3.

(b) *Reporting requirements*.

(1) *Centrifugal compressors*. For each centrifugal compressor, you must submit annual reports containing the information specified in paragraphs (b)(1)(i) through (iii) of this section.

(i) An identification of each existing centrifugal compressor using a wet seal system and each centrifugal compressor constructed, modified or reconstructed during the reporting period.

(ii) Records of deviations specified in paragraph (a)(1)(ii) of this section that occurred during the reporting period.

(iii) If required to comply with section C.2(a), the records specified in paragraphs (a)(1)(iii) through (viii) of this section.

(2) *Reciprocating compressors*. For each reciprocating compressor, you must submit annual reports containing the information specified in paragraphs (b)(2)(i) and (ii) of this section.

(i) The cumulative number of hours of operation or the number of months since the compliance date, or since the previous reciprocating compressor rod packing replacement, whichever is later.

(ii) Records of deviations specified in paragraph (a)(2)(iii) of this section that occurred during the reporting period.

C.7 Definitions

Centrifugal compressor means any machine for raising the pressure of a natural gas by drawing in low pressure natural gas and discharging significantly higher pressure natural gas by means of mechanical rotating vanes or impellers. Screw, sliding vane, and liquid ring compressors are not centrifugal compressors for the purposes of this rule.

Compressor station means any permanent combination of one or more compressors that move natural gas at increased pressure from fields, in transmission pipelines, or into storage.

Reciprocating compressor means a piece of equipment that increases the pressure of a process gas by positive displacement, employing linear movement of the driveshaft.

Reciprocating compressor rod packing means a series of flexible rings in machined metal cups that fit around the reciprocating compressor piston rod to create a seal limiting the amount of compressed natural gas that escapes to the atmosphere.

Routed to a process or route to a process means the emissions are conveyed via a closed vent system to any enclosed portion of a process where the emissions are predominantly recycled and/or consumed in the same manner as a material that fulfills the same function in the process and/or transformed by chemical reaction into materials that are not regulated materials and/or incorporated into a product; and/or recovered. Salable quality gas means natural gas that meets the flow line or collection system operator specifications, regardless of whether such gas is sold.

D Cover and Closed Vent System Requirements

D.1 What Are My Cover and Closed Vent System Requirements?

You must meet the applicable requirements of this section for each cover and closed vent system where VOC emissions are routed to a control device or to a process.

(a) *Cover requirements*. (1) The cover and all openings on the cover (e.g., access hatches, sampling ports, pressure relief valves and gauge wells) shall form a continuous impermeable barrier over the entire surface area of the liquid in the storage vessel or wet seal fluid degassing system.

(2) Each cover opening shall be secured in a closed, sealed position (e.g., covered by a gasketed lid or cap) whenever material is in the unit on which the cover is installed except during those times when it is necessary to use an opening as follows:

(i) To add material to, or remove material from the unit (this includes openings necessary to equalize or balance the internal pressure of the unit following changes in the level of the material in the unit);

(ii) To inspect or sample the material in the unit;

(iii) To inspect, maintain, repair, or replace equipment located inside the unit; or

(iv) To vent liquids, gases, or fumes from the unit through a closed-vent system, designed and operated in accordance with the requirements of paragraph (b)(1) of this section to a control device or to a process.

(3) *Additional cover requirement for storage vessels*. Each storage vessel thief hatch shall be equipped, maintained and operated with a weighted mechanism or equivalent, to ensure that the lid remains properly seated. You must select gasket material for the hatch based on composition of the fluid in the storage vessel and weather conditions.

(b) *Closed vent system requirements*. For closed vent system requirements using a control device or routing emissions to a process, you must comply with the following:

(1) You must design the closed vent system to route all gases, vapors, and fumes emitted from the VOC emissions source to a control device that meets the requirements specified in section E.1(a) and (c), or to a process.

(2) You must design and operate a closed vent system with no detectable emissions, as determined using olfactory, visual and auditory inspections. Each closed vent system that routes emissions to a process must be operational 95 percent of the year or greater.

(3) You must meet the requirements specified in paragraph (b)(3)(i) of this section if the closed vent system contains one or more bypass devices that could be used to divert all or a portion of the gases, vapors, or fumes from entering the control device or to a process.

(i) Except as provided in paragraph (b)(3)(ii) of this section, you must comply with either paragraph (b)(3)(i)(*A*) or (*B*) of this section for each bypass device.

(A) You must properly install, calibrate, maintain, and operate a flow indicator at the inlet to the bypass device that could divert the stream away from the control device or process to the atmosphere. Set the flow indicator to trigger an audible alarm, and initiate notification via remote alarm to the nearest field office, when the bypass device is open such that the stream is being, or could be, diverted away from the control device or process to the atmosphere.

(B) You must secure the bypass device valve installed at the inlet to the bypass device in the non-diverting position using a car-seal or a lock-and-key type configuration.

(ii) Low leg drains, high point bleeds, analyzer vents, open-ended valves or lines, and safety devices are not subject to the requirements of paragraph (b)(3)(i) of this section.

D.2 What Are My Initial and Continuous Cover and Closed Vent System Inspection and Monitoring Requirements?

Except as provided in paragraphs (e)(11) and (12) of this section, you must inspect each closed vent system according to the procedures and schedule specified in paragraphs (a) and (b) of this section, inspect each cover according to the procedures and schedule specified in paragraph (c) of this section, and inspect each bypass device according to the procedures of paragraph (d) of this section.

(a) For each closed vent system joint, seam, or other connection that is permanently or semi-permanently sealed (e.g., a welded joint between two sections of hard piping or a bolted and gasketed ducting flange), you must meet the requirements specified in paragraphs (a)(1) and (2) of this section.

(1) Conduct an initial inspection according to the test methods and procedures specified in paragraph (e) of this section to demonstrate that the closed vent system operates with no detectable emissions. You must maintain records of the inspection results.

(2) Conduct annual visual inspections for defects that could result in air emissions. Defects include, but are not limited to, visible cracks, holes, or gaps in piping; loose connections; liquid leaks; or broken or missing caps or other closure devices. You must monitor a component or connection using the test methods and procedures in paragraph (b) of this section to demonstrate that it operates with no detectable emissions following any time the component is repaired or replaced or the connection is unsealed. You must maintain records of the inspection results.

(b) For closed vent system components other than those specified in paragraph (a) of this section, you must meet the requirements of paragraphs (b)(1) through (3) of this section.

(1) Conduct an initial inspection according to the test methods and procedures specified in paragraph (e) of this section to demonstrate that the closed vent system operates with no detectable emissions by the date specified by your regulatory authority. You must maintain records of the inspection results.

(2) Conduct annual inspections according to the test methods and procedures specified in paragraph (e) of this section to demonstrate that the components or connections operate with no detectable emissions. You must maintain records of the inspection results.

(3) Conduct annual visual inspections for defects that could result in air emissions. Defects include, but are not limited to, visible cracks, holes, or gaps in ductwork; loose connections; liquid leaks; or broken or missing caps or other closure devices. You must maintain records of the inspection results.

(c) For each cover, you must meet the requirements in paragraphs (c)(1) and (2) of this section.

(1) Conduct visual inspections for defects that could result in air emissions. Defects include, but are not limited to, visible cracks, holes, or gaps in the cover, or between the cover and the separator wall; broken, cracked, or otherwise damaged seals or gaskets on closure devices; and broken or missing hatches, access covers, caps, or other closure devices. In the case where the storage vessel is buried partially or entirely underground, you must inspect only those portions of the cover that extend to or above the ground surface, and those connections that are on such portions of the cover (e.g., fill ports, access hatches, gauge wells, etc.) and can be opened to the atmosphere.

(2) You must initially conduct the inspections specified in paragraph (c)(1) of this section following the installation of the cover. Thereafter, you must perform the inspection at least once every calendar year, except as provided in paragraphs (e)(11) and (12) of this section. You must maintain records of the inspection results.

(d) For each bypass device, except as provided for in section D.1, you must meet the requirements of paragraphs (d)(1) or (2) of this section.

(1) Set the flow indicator to take a reading at least once every 15 minutes at the inlet to the bypass device that could divert the steam away from the control device to the atmosphere.

(2) If the bypass device valve installed at the inlet to the bypass device is secured in the non-diverting position using a car-seal or a lock-and-key type configuration, visually inspect the seal or closure mechanism at least once every month to verify that the valve is maintained in the non-diverting position and the vent stream is not diverted through the bypass device. You must maintain records of the inspections.

(e) *No detectable emissions test methods and procedures.* If you are required to conduct an inspection of a closed vent system or cover as specified in paragraphs (a), (b), or (c) of this section, you must meet the requirements of paragraphs (e)(1) through (13) of this section.

(1) You must conduct the no detectable emissions test procedure in accordance with Method 21, 40 CFR part 60, appendix A-7.

(2) The detection instrument must meet the performance criteria of Method 21, 40 CFR part 60, appendix A-7, except that the instrument response factor criteria in section 3.1.2(a) of Method 21 must be for the average composition of the fluid and not for each individual organic compound in the stream.

(3) You must calibrate the detection instrument before use on each day of its use by the procedures specified in Method 21, 40 CFR part 60, appendix A-7.

(4) Calibration gases must be as specified in paragraphs (e)(4)(i) and (ii) of this section.

(i) Zero air (less than 10 parts per million by volume hydrocarbon in air).

(ii) A mixture of methane in air at a concentration less than 10,000 parts per million by volume.

(5) You may choose to adjust or not adjust the detection instrument readings to account for the background organic concentration level. If you choose to adjust the instrument readings for the background level, you must determine the background level value according to the procedures in Method 21, 40 CFR part 60, appendix A-7.

(6) Your detection instrument must meet the performance criteria specified in paragraphs (e)(6)(i) and (ii) of this section.

(i) Except as provided in paragraph (e)(6)(ii) of this section, the detection instrument must meet the performance criteria of Method 21, 40 CFR part 60, appendix A-7, except the instrument response factor criteria in section 3.1.2(a) of Method 21 must be for the average composition of the process fluid, not each individual volatile organic compound in the stream. For process streams that contain nitrogen, air, or other inerts that are not volatile organic compounds, you must calculate the average stream response factor on an inert-free basis.

(ii) If no instrument is available that will meet the performance criteria specified in paragraph (e)(6)(i) of this section, you may adjust the instrument readings by multiplying by the average response factor of the process fluid, calculated on an inert-free basis, as described in paragraph (e)(6)(i) of this section.

(7) You must determine if a potential leak interface operates with no detectable emissions using the applicable procedure specified in paragraph (e)(7)(i) or (ii) of this section.

(i) If you choose not to adjust the detection instrument readings for the background organic concentration level, then you must directly compare the maximum organic concentration value measured by the detection instrument to the applicable value for the potential leak interface as specified in paragraph (e)(8) of this section.

(ii) If you choose to adjust the detection instrument readings for the background organic concentration level, you must compare the value of the arithmetic difference between the maximum organic concentration value measured by the instrument and the background organic concentration value as determined in paragraph (e)(5) of this section with the applicable value for the potential leak interface as specified in paragraph (e)(8) of this section.

(8) A potential leak interface is determined to operate with no detectable organic emissions if the organic concentration value determined in paragraph (e)(7) of this section is less than 500 parts per million by volume.

(9) *Repairs.* In the event that a leak or defect is detected, you must repair the leak or defect as soon as practicable according to the requirements of paragraphs (e)(9)(i) and (ii) of this section, except as provided in paragraph (e)(10) of this section.

(i) A first attempt at repair must be made no later than 5 calendar days after the leak is detected.

(ii) Repair must be completed no later than 15 calendar days after the leak is detected.

(10) *Delay of repair.* Delay of repair of a closed vent system or cover for which leaks or defects have been detected is allowed if the repair is technically infeasible without a shutdown, or if you determine that emissions resulting from immediate repair would be greater than the fugitive emissions likely to result from delay of repair. You must complete repair of such equipment by the end of the next shutdown.

(11) *Unsafe to inspect requirements.* You may designate any parts of the closed vent system or cover as unsafe to inspect if the requirements in paragraphs (e)(11)(i) and (ii) of this section are met. Unsafe to inspect parts are exempt from the inspection requirements of paragraphs (a) through (c) of this section.

(i) You determine that the equipment is unsafe to inspect because inspecting personnel would be exposed to an imminent or potential danger as a consequence of complying with paragraphs (a), (b), or (c) of this section.

(ii) You have a written plan that requires inspection of the equipment as frequently as practicable during safe-to-inspect times.

(12) *Difficult to inspect requirements.* You may designate any parts of the closed vent system or cover as difficult to inspect, if the requirements in paragraphs (e)(12)(i) and (ii) of this section are met. Difficult to inspect parts are exempt from the inspection requirements of paragraphs (a) through (c) of this section.

(i) You determine that the equipment cannot be inspected without elevating the inspecting personnel more than 2 meters above a support surface.

(ii) You have a written plan that requires inspection of the equipment at least once every 5 years.

(13) *Records.* Records shall be maintained as specified in this section and in sections that reference this section.

E VOC Emission Control Device Requirements

E.1 Initial Control Device Compliance Requirements

You must meet the applicable requirements of this section for each control device used to comply with VOC emission reduction requirements by the compliance date specified by your regulatory authority.

(a) Each control device used to meet the VOC emission reduction requirements must be installed according to paragraphs (a)(1) through (3) of this section. As an alternative, you may install a control device model tested under section F(d), which meets the criteria in section F(d)(11) and section F(e).

(1) Each combustion device (e.g., thermal vapor incinerator, catalytic vapor incinerator, boiler, or process heater) must be designed and operated in accordance with one of the performance requirements specified in paragraphs (a)(1)(i) through (iv) of this section.

(i) You must reduce the mass content of VOC in the gases vented to the device by 95 percent by weight or greater as determined in accordance with the requirements of section F(b).

(ii) You must reduce the concentration of TOC in the exhaust gases at the outlet to the device to a level equal to or less than 600 parts per million by volume as propane on a dry basis corrected to 3 percent oxygen as determined in accordance with the requirements of section F(b).

(iii) You must operate at a minimum temperature of 760°C for a control device that can demonstrate a uniform combustion zone temperature during the performance test conducted under section F(b).

(iv) If a boiler or process heater is used as the control device, then you must introduce the vent stream into the flame zone of the boiler or process heater.

(2) Each vapor recovery device (e.g., carbon adsorption system or condenser) or other non-destructive control device must be designed and operated to reduce the mass content of

VOC in the gases vented to the device by 95 percent by weight or greater as determined in accordance with the requirements of section F. As an alternative to the performance testing requirements, you may demonstrate initial compliance by conducting a design analysis for vapor recovery devices according to the requirements of section F(c).

(3) You must design and operate a flare in accordance with the requirements of section F.

(b) You must operate each control device installed to control VOC emissions from your emissions source in accordance with the requirements specified in paragraphs (b)(1) and (2) of this section.

(1) You must operate each control device used to comply with this rule at all times when gases, vapors, and fumes are vented from your VOC emissions source through the closed vent system to the control device. You may vent more than one source to a control device used to comply with this rule.

(2) For each control device monitored in accordance with the requirements of section E.2(a) through (g), you must demonstrate continuous compliance according to the requirements of section A.4(c) for storage vessels, section C.5(a)(2) for centrifugal compressors, section H.4 for pneumatic pumps, and as applicable.

(c) For each carbon adsorption system used as a control device to meet the requirements of paragraph (a)(2) of this section, you must manage the carbon in accordance with the requirements specified in paragraphs (c)(1) or (2) of this section.

(1) Following the compliance date established by your regulatory authority for the source using the control device, you must replace all carbon in the control device with fresh carbon on a regular, predetermined time interval that is no longer than the carbon service life established according to section F(c)(2) or (3) or according to the design required in paragraph (a)(2) of this section, for the carbon adsorption system. You must maintain records identifying the schedule for replacement and records of each carbon replacement.

(2) You must either regenerate, reactivate, or burn the spent carbon removed from the carbon adsorption system in one of the units specified in paragraphs (c)(2)(i) through (vii) of this section.

(i) Regenerate or reactivate the spent carbon in a thermal treatment unit for which you have been issued a final permit under 40 CFR part 270 that implements the requirements of 40 CFR part 264, subpart X.

(ii) Regenerate or reactivate the spent carbon in a thermal treatment unit equipped with and operating air 95 percent in accordance with this section.

(iii) Regenerate or reactivate the spent carbon in a thermal treatment unit equipped with and operating organic air 95 percent in accordance with an emissions standard for VOC under this rule.

(iv) Burn the spent carbon in a hazardous waste incinerator for which the owner or operator has been issued a final permit under 40 CFR part 270 that implements the requirements of 40 CFR part 264, subpart O.

(v) Burn the spent carbon in a hazardous waste incinerator which you have designed and operated in accordance with the requirements of 40 CFR part 265, subpart O.

(vi) Burn the spent carbon in a boiler or industrial furnace for which you have been issued a final permit under 40 CFR part 270 that implements the requirements of 40 CFR part 266, subpart H.

(vii) Burn the spent carbon in a boiler or industrial furnace that you have designed and operated in accordance with the interim status requirements of 40 CFR part 266, subpart H.

(d) Each control device used to meet the emission reduction standard in section A.2 for a storage vessel must be installed according to paragraphs (d)(1) through (4) of this section, as applicable. As an alternative to paragraph (d)(1) of this section, you may install a control device model tested under section F(d), which meets the criteria in section F(d)(11) and F(e).

(1) Each enclosed combustion device (*e.g.,* thermal vapor incinerator, catalytic vapor incinerator, boiler, or process heater) must be designed to reduce the mass content of VOC emissions by 95.0 percent or greater. You must follow the requirements in paragraphs (d)(1)(i) through (iii) of this section.

(i) Ensure that each enclosed combustion device is maintained in a leak free condition.

(ii) Install and operate a continuous burning pilot flame.

(iii) Operate the enclosed combustion device with no visible emissions, except for periods not to exceed a total of one minute during any 15 minute period. A visible emissions test using section 11 of EPA Method 22, 40 CFR part 60, appendix A, must be performed at least once every calendar month, separated by at least 15 days between each test. The observation period shall be 15 minutes. Devices failing the visible emissions test must follow manufacturer's repair instructions, if available, or best combustion engineering practice as outlined in the unit inspection and maintenance plan, to return the unit to compliant operation. All inspection, repair and maintenance activities for each unit must be recorded in a maintenance and repair log and must be available for inspection. Following return to operation from maintenance or repair activity, each device must pass a Method 22, 40 CFR part 60, appendix A, visual observation as described in this paragraph.

(2) Each vapor recovery device (*e.g.,* carbon adsorption system or condenser) or other non-destructive control device must be designed and operated to reduce the mass content of VOC in the gases vented to the device by 95.0 percent by weight or greater. A carbon replacement schedule must be included in the design of the carbon adsorption system.

(3) You must operate each control device used to comply with this subpart at all times when gases, vapors, and fumes are vented from the storage vessel affected facility through the closed vent system to the control device. You may vent more than one affected facility to a control device used to comply with this subpart.

(4) Each combustion control device (e.g., thermal vapor incinerator, catalytic vapor incinerator, boiler, or process heater) must be designed and operated in accordance with one of

the performance requirements specified in paragraphs (i) through (iv) of this section.

(i) You must reduce the mass content of methane and VOC in the gases vented to the device by 95.0 percent by weight or greater as determined in accordance with the requirements of section F.

(ii) You must reduce the concentration of TOC in the exhaust gases at the outlet to the device to a level equal to or less than 600 parts per million by volume as propane on a dry basis corrected to 3 percent oxygen as determined in accordance with the requirements of section F.

(iii) You must operate at a minimum temperature of 760°C for a control device that can demonstrate a uniform combustion zone temperature during the performance test conducted under section F.

(iv) If a boiler or process heater is used as the control device, then you must introduce the vent stream into the flame zone of the boiler or process heater.

E.2 Continuous Control Device Monitoring Requirements

You must meet the applicable requirements of this section to demonstrate continuous compliance for each control device used to meet VOC emission control requirements.

(a) For each control device used to comply with the VOC emission reduction requirements, you must install and operate a continuous parameter monitoring system for each control device as specified in paragraphs (c) through (h) of this section, except as provided for in paragraph (b) of this section. If you install and operate a flare in accordance with section E.1(a)(3), you are exempt from the requirements of paragraphs (e) and (f) of this section.

(b) You are exempt from the monitoring requirements specified in paragraphs (c) through (f) of this section for the control devices listed in paragraphs (b)(1) and (2) of this section.

(1) A boiler or process heater in which all vent streams are introduced with the primary fuel, or used as the primary fuel.

(2) A boiler or process heater with a design heat input capacity equal to or greater than 44 megawatts.

(c) If you are required to install a continuous parameter monitoring system, you must meet the specifications and requirements in paragraphs (c)(1) through (4) of this section.

(1) Each continuous parameter monitoring system must measure data values at least once every hour and record the parameters in paragraphs (c)(1)(i) or (ii) of this section.

(i) Each measured data value.

(ii) Each block average value for each 1-hour period or shorter periods calculated from all measured data values during each period. If values are measured more frequently than once per minute, a single value for each minute may be used to calculate the hourly (or shorter period) block average instead of all measured values.

(2) You must prepare a site-specific monitoring plan that addresses the monitoring system design, data collection, and the quality assurance and quality control elements outlined in paragraphs (c)(2)(i) through (v) of this section. You must install, calibrate, operate, and maintain each continuous parameter monitoring system in accordance with the procedures in your approved site-specific monitoring plan.

(i) The performance criteria and design specifications for the monitoring system equipment, including the sample interface, detector signal analyzer, and data acquisition and calculations.

(ii) Sampling interface (e.g., thermocouple) location such that the monitoring system will provide representative measurements.

(iii) Equipment performance checks, system accuracy audits, or other audit procedures.

(iv) On-going operation and maintenance procedures in accordance with provisions in 40 CFR 60.13(b).

(v) Ongoing reporting and recordkeeping procedures in accordance with provisions in 40 CFR 60.7(c), (d), and (f).

(3) You must conduct the continuous parameter monitoring system equipment performance checks, system accuracy audits, or other audit procedures specified in the site-specific monitoring plan at least once every 12 months.

(4) You must conduct a performance evaluation of each continuous parameter monitoring system in accordance with the site-specific monitoring plan.

(d) You must install, calibrate, operate, and maintain a device equipped with a continuous recorder to measure the values of operating parameters appropriate for the control device as specified in either paragraph (d)(1), (2), or (3) of this section.

(1) A continuous monitoring system that measures the operating parameters in paragraphs (d)(1)(i) through (viii) of this section, as applicable.

(i) For a thermal vapor incinerator that demonstrates during the performance test conducted under section X.F that combustion zone temperature is an accurate indicator of performance, a temperature monitoring device equipped with a continuous recorder. The monitoring device must have a minimum accuracy of ±1 percent of the temperature being monitored in °C, or ±2.5°C, whichever value is greater. You must install the temperature sensor at a location representative of the combustion zone temperature.

(ii) For a catalytic vapor incinerator, a temperature monitoring device equipped with a continuous recorder. The device must be capable of monitoring temperature at two locations and have a minimum accuracy of ±1 percent of the temperature being monitored in °C, or ±2.5°C, whichever value is greater. You must install one temperature sensor in the vent stream at the nearest feasible point to the catalyst bed inlet, and you must install a second temperature sensor in the vent stream at the nearest feasible point to the catalyst bed outlet.

(iii) For a flare, a heat sensing monitoring device equipped with a continuous recorder that indicates the continuous ignition of the pilot flame.

(iv) For a boiler or process heater, a temperature monitoring device equipped with a continuous recorder. The temperature monitoring device must have a minimum accuracy of ±1 percent of the temperature being monitored in °C, or ±2.5°C, whichever value is greater. You must install the temperature sensor at a location representative of the combustion zone temperature.

(v) For a condenser, a temperature monitoring device equipped with a continuous recorder. The temperature monitoring device must have a minimum accuracy of ±1 percent of the temperature being monitored in °C, or ±2.8°C, whichever value is greater. You must install the temperature sensor at a location in the exhaust vent stream from the condenser.

(vi) For a regenerative-type carbon adsorption system, a continuous monitoring system that meets the specifications in paragraphs (d)(1)(vi)(A) and (B) of this section.

(A) The continuous parameter monitoring system must measure and record the average total regeneration stream mass flow or volumetric flow during each carbon bed regeneration cycle. The flow sensor must have a measurement sensitivity of 5 percent of the flow rate or 10 cubic feet per minute, whichever is greater. You must check the mechanical connections for leakage at least every month, and you must perform a visual inspection at least every 3 months of all components of the flow continuous parameter monitoring system for physical and operational integrity and all electrical connections for oxidation and galvanic corrosion if your flow continuous parameter monitoring system is not equipped with a redundant flow sensor; and

(B) The continuous parameter monitoring system must measure and record the average carbon bed temperature for the duration of the carbon bed steaming cycle and measure the actual carbon bed temperature after regeneration and within 15 minutes of completing the cooling cycle. The temperature monitoring device must have a minimum accuracy of ±1 percent of the temperature being monitored in °C, or ±2.5°C, whichever value is greater.

(vii) For a non-regenerative-type carbon adsorption system, you must monitor the design carbon replacement interval established using a performance test performed as specified in section X.F(b). The design carbon replacement interval must be based on the total carbon working capacity of the control device and source operating schedule.

(viii) For a combustion control device whose model is tested under section X.F(d), a continuous monitoring system meeting the requirements of paragraphs (d)(1)(viii)(A) through (D) of this section.

(A) The continuous monitoring system must measure gas flow rate at the inlet to the control device. The monitoring instrument must have an accuracy of ±2 percent or better. The flow rate at the inlet to the combustion device must not exceed the maximum or minimum flow rate determined by the manufacturer.

(B) A monitoring device that continuously indicates the presence of the pilot flame while emissions are routed to the control device.

(C) Devices failing the visible emissions test must follow manufacturer's repair instructions, if available, or best combustion engineering practice as outlined in the unit inspection and maintenance plan, to return the unit to compliant operation. All repairs and maintenance activities for each unit must be recorded in a maintenance and repair log and must be available for inspection.

(D) Following return to operation from maintenance or repair activity, each device must pass a Method 22, 40 CFR part 60, appendix A, visual observation as described in paragraph (d)(2)(viii)(B) of this section.

(2) An organic monitoring device equipped with a continuous recorder that measures the concentration level of organic compounds in the exhaust vent stream from the control device. The monitor must meet the requirements of Performance Specification 8 or 9 of 40 CFR part 60, appendix B. You must install, calibrate, and maintain the monitor according to the manufacturer's specifications.

(3) A continuous monitoring system that measures operating parameters other than those specified in paragraph (d)(1) or (2) of this section, upon approval of the regulatory authority.

(e) You must calculate the daily average value for each monitored operating parameter for each operating day, using the data recorded by the monitoring system, except for inlet gas

flow rate. If the emissions unit operation is continuous, the operating day is a 24-hour period. If the emissions unit operation is not continuous, the operating day is the total number of hours of control device operation per 24-hour period. Valid data points must be available for 75 percent of the operating hours in an operating day to compute the daily average.

(f) For each operating parameter monitor installed in accordance with the requirements of paragraph (d) of this section, you must comply with paragraph (f)(1) of this section for all control devices. When condensers are installed, you must also comply with paragraph (f)(2) of this section.

(1) You must establish a minimum operating parameter value or a maximum operating parameter value, as appropriate for the control device, to define the conditions at which the control device must be operated to continuously achieve the applicable performance requirements of section E.1(a). You must establish each minimum or maximum operating parameter value as specified in paragraphs (f)(1)(i) through (iii) of this section.

(i) If you conduct performance tests in accordance with the requirements of section F(b) to demonstrate that the control device achieves the applicable performance requirements specified in section E.1(a), then you must establish the minimum operating parameter value or the maximum operating parameter value based on values measured during the performance test and supplemented, as necessary, by a condenser design analysis or control device manufacturer recommendations or a combination of both.

(ii) If you use a condenser design analysis in accordance with the requirements of section F(c) to demonstrate that the control device achieves the applicable performance requirements specified in section E.1(a), then you must establish the minimum operating parameter value or the maximum operating parameter value based on the condenser design analysis and supplemented, as necessary, by the condenser manufacturer's recommendations.

(iii) If you operate a control device where the performance test requirement was met under section F(d) to demonstrate that the control device achieves the applicable performance requirements specified in section E.1(a), then your control device inlet gas flow rate must not exceed the maximum or minimum inlet gas flow rate determined by the manufacturer.

(2) If you use a condenser as specified in paragraph (d)(1)(v) of this section, you must establish a condenser performance curve showing the relationship between condenser outlet temperature and condenser control efficiency, according to the requirements of paragraphs (f)(2)(i) and (ii) of this section.

(i) If you conduct a performance test in accordance with the requirements of section F(b) to demonstrate that the condenser achieves the applicable performance requirements in section E.1(a), then the condenser performance curve must be based on values measured during the performance test and supplemented as necessary by control device design analysis, or control device manufacturer's recommendations, or a combination or both.

(ii) If you use a control device design analysis in accordance with the requirements of section F(c)(1) to demonstrate that the condenser achieves the applicable performance requirements specified in section E.1(a), then the condenser performance curve must be based on the condenser design analysis and supplemented, as necessary, by the control device manufacturer's recommendations.

(g) A deviation for a given control device is determined to have occurred when the monitoring data or lack of monitoring data result in any one of the criteria specified in paragraphs (g)(1) through (6) of this section being met. If you monitor multiple operating parameters for the same control device during the same operating day and more than one of these operating parameters meets a deviation criterion specified in paragraphs (g)(1) through (6) of this section, then a single excursion is determined to have occurred for the control device for that operating day.

(1) A deviation occurs when the daily average value of a monitored operating parameter is less than the minimum operating parameter limit (or, if applicable, greater than the maximum operating parameter limit) established in paragraph (f)(1) of this section.

(2) If you meet section E.1(a)(2), a deviation occurs when the 365-day average condenser efficiency calculated according to the requirements specified in section F(b) is less than 95 percent.

(3) If you meet section E.1(a)(2) and you have less than 365 days of data, a deviation occurs when the average condenser efficiency calculated according to the procedures specified in section F(b) is less than 90.0 percent.

(4) A deviation occurs when the monitoring data are not available for at least 75 percent of the operating hours in a day.

(5) If the closed vent system contains one or more bypass devices that could be used to divert all or a portion of the gases, vapors, or fumes from entering the control device, a deviation occurs when the requirements of paragraphs (g)(5)(i) and (ii) of this section are met.

(i) For each bypass line subject to section D.1(b)(3)(i)(A), the flow indicator indicates that flow has been detected and that the stream has been diverted away from the control device to the atmosphere.

(ii) For each bypass line subject to section D.1(b)(3)(i)(B), if the seal or closure mechanism has been broken, the bypass line valve position has changed, the key for the lock-and-key type lock has been checked out, or the car-seal has broken.

(6) For a combustion control device whose model is tested under section F(d), a deviation occurs when the conditions of paragraphs (g)(6)(i) or (ii) are met.

(i) The inlet gas flow rate exceeds the maximum established during the test conducted under section F(d).

(ii) Failure of the monthly visible emissions test conducted under section F(e)(3) occurs.

(h) Each control device used to meet a VOC emission reduction requirement must be operated following the manufacturer's written operating instructions, procedures and maintenance schedule to ensure good air pollution control practices for minimizing emissions. Records of the manufacturer's written operating instructions, procedures, and maintenance schedule must be available for inspection.

F Performance Test Procedures

This section applies to the performance testing of control devices used to demonstrate compliance with your VOC emission control requirements. You must demonstrate that a control device achieves the performance requirements specified for your emissions source using the performance test methods and procedures specified in this section. For condensers, you may use a design analysis as specified in paragraph (c) of this section in lieu of complying with paragraph (b) of this section. In addition, this section contains the requirements for enclosed combustion device performance tests conducted by the manufacturer, as relevant and allowed for compliance demonstration purposes.

(a) *Performance test exemptions.* You are exempt from the requirements to conduct performance tests and design analyses if you use any of the control devices described in paragraphs (a)(1) through (7) of this section.

(1) *A flare that is designed and operated in accordance with 40 CFR 60.18(b)*. You must conduct the compliance determination using Method 22, 40 CFR part 60, appendix A-7, to determine visible emissions.

(2) A boiler or process heater with a design heat input capacity of 44 megawatts or greater.

(3) A boiler or process heater into which the vent stream is introduced with the primary fuel or is used as the primary fuel.

(4) A boiler or process heater burning hazardous waste for which you have either been issued a final permit under 40 CFR part 270 and comply with the requirements of 40 CFR part 266, subpart H; or you have certified compliance with the interim status requirements of 40 CFR part 266, subpart H.

(5) A hazardous waste incinerator for which you have been issued a final permit under 40 CFR part 270 and comply with the requirements of 40 CFR part 264, subpart O; or you have certified compliance with the interim status requirements of 40 CFR part 265, subpart O.

(6) A performance test is waived in accordance with 40 CFR 60.8(b).

(7) A control device whose model can be demonstrated to meet the performance requirements of section E.1(a) through a performance test conducted by the manufacturer, as specified in paragraph (d) of this section.

(b) *Test methods and procedures.* You must use the test methods and procedures specified in paragraphs (b)(1) through (5) of this section, as applicable, for each performance test conducted to demonstrate that a control device meets the requirements of section E.1(a). You must conduct the initial and periodic performance tests according to the schedule specified in paragraph (b)(5) of this section.

(1) You must use Method 1 or 1A, 40 CFR part 60, appendix A-1, as appropriate, to select the sampling sites specified in paragraphs (b)(1)(i) and (ii) of this section. Any references to particulate mentioned in Methods 1 and 1A do not apply to this section.

(i) Sampling sites must be located at the inlet of the first control device, and at the outlet of the final control device, to determine compliance with the control device percent reduction requirement specified in section E.1(a)(1)(i) or (a)(2).

(ii) The sampling site must be located at the outlet of the combustion device to determine compliance with the enclosed combustion device TOC concentration limit specified in section E.1(a)(1)(ii).

(2) You must determine the gas volumetric flowrate using Method 2, 2A, 2C, or 2D, 40 CFR part 60, appendix A-2, as appropriate.

(3) To determine compliance with the control device percent reduction performance requirement in section E.1(a)(1)(i) or (a)(2), you must use Method 25A at 40 CFR part 60, appendix A-7. You must use the procedures in paragraphs (b)(3)(i) through (iv) of this section to calculate percent reduction efficiency.

(i) For each run, you must take either an integrated sample or a minimum of four grab samples per hour. If grab sampling is used, then the samples must be taken at approximately equal intervals in time, such as 15-minute intervals during the run.

(ii) You must compute the mass rate of TOC (minus methane and ethane) using the equations and procedures specified in paragraphs (b)(3)(ii)(A) and (B) of this section.

(A) You must use the following equations:

$$E_i = K_2\left(\sum_{j=1}^{n} C_{ij}M_{ij}\right)Q_i$$

$$E_o = K_2\left(\sum_{j=1}^{n} C_{oj}M_{oj}\right)Q_o$$

Where:

E_i, E_o = Mass rate of TOC (minus methane and ethane) at the inlet and outlet of the control device, respectively, dry basis, kilogram per hour.

K_2 = Constant, 2.494×10^{-6} (parts per million) (gram-mole per standard cubic meter) (kilogram/gram) (minute/hour), where standard temperature (gram-mole per standard cubic meter) is 20°C.

C_{ij}, C_{oj} = Concentration of sample component j of the gas stream at the inlet and outlet of the control device, respectively, dry basis, parts per million by volume.

M_{ij}, M_{oj} = Molecular weight of sample component j of the gas stream at the inlet and outlet of the control device, respectively, gram/gram-mole.

Q_i, Q_o = Flowrate of gas stream at the inlet and outlet of the control device, respectively, dry standard cubic meter per minute.

n = Number of components in sample.

(B) When calculating the TOC mass rate, you must sum all organic compounds (minus methane and ethane) measured by Method 25A, 40 CFR part 60, appendix A-7 using the equations in paragraph (b)(3)(ii)(A) of this section.

(iii) You must calculate the percent reduction in TOC (minus methane and ethane) as follows:

$$R_{cd} = \frac{E_i - E_o}{E_i} \text{ x } 100\%$$

Where:

R_{cd} = Control efficiency of control device, percent.

E_i = Mass rate of TOC (minus methane and ethane) at the inlet to the control device as calculated under paragraph (b)(3)(ii) of this section, kilograms TOC per hour or kilograms HAP per hour.

E_o = Mass rate of TOC (minus methane and ethane) at the outlet of the control device, as calculated under paragraph (b)(3)(ii) of this section, kilograms TOC per hour per hour.

(iv) If the vent stream entering a boiler or process heater with a design capacity less than 44 megawatts is introduced with the combustion air or as a secondary fuel, you must determine the weight-percent reduction of TOC (minus methane and ethane) across the device by comparing the TOC (minus methane and ethane) in all combusted vent streams and primary and secondary fuels with the TOC (minus methane and ethane) exiting the device, respectively.

(4) You must use Method 25A, 40 CFR part 60, appendix A-7 to measure TOC (minus methane and ethane) to determine compliance with the enclosed combustion device total VOC concentration limit specified in section E.1(a)(1)(ii). You must calculate parts per million by volume concentration and correct to 3 percent oxygen, using the procedures in paragraphs (b)(4)(i) through (iii) of this section.

(i) For each run, you must take either an integrated sample or a minimum of four grab samples per hour. If grab sampling is used, then the samples must be taken at approximately equal intervals in time, such as 15-minute intervals during the run.

(ii) You must calculate the TOC concentration for each run as follows:

$$C_{TOC} = \sum_{i=1}^{x} \frac{\left(\sum_{j=1}^{n} C_{ji} \right)}{x}$$

Where:

C_{TOC} = Concentration of total organic compounds minus methane and ethane, dry basis, parts per million by volume.

C_{ji} = Concentration of sample component j of sample I dry basis, parts per million by volume.

n = Number of components in the sample.

x = Number of samples in the sample run.

(iii) You must correct the TOC concentration to 3 percent oxygen as specified in paragraphs (b)(4)(iii)(A) and (B) of this section.

(A) You must use the emission rate correction factor for excess air, integrated sampling and analysis procedures of Method 3A or 3B at 40 CFR part 60, appendix A, ASTM D6522-00 (Reapproved 2005), or ANSI/ASME PTC 19.10-1981, Part 10 (manual portion only) (incorporated by reference as specified in §60.17) to determine the oxygen concentration. The samples must be taken during the same time that the samples are taken for determining TOC concentration.

(B) You must correct the TOC concentration for percent oxygen as follows:

$$C_c = C_m \left(\frac{17.9}{20.9 - \%O_{2d}} \right)$$

Where:

C_c = TOC concentration corrected to 3 percent oxygen, dry basis, parts per million by volume.

C_m = TOC concentration, dry basis, parts per million by volume.

$\%O_{2d}$ = Concentration of oxygen, dry basis, percent by volume.

(5) You must conduct performance tests according to the schedule specified in paragraphs (b)(5)(i) and (ii) of this section.

(i) You must conduct an initial performance test within 180 days after the compliance date for your source.

(ii) You must conduct periodic performance tests for all control devices required to conduct initial performance tests except as specified in paragraphs (b)(5)(ii)(A) and (B) of this section. You must conduct the first periodic performance test no later than 60 months after the initial performance test required in paragraph (b)(5)(i) of this section. You must conduct subsequent periodic performance tests at intervals no longer than 60 months following the previous periodic performance test or whenever you desire to establish a new operating limit. Combustion control devices meeting the criteria in either paragraph (b)(5)(ii)(A) or (B) of this section are not required to conduct periodic performance tests.

(A) A control device whose model is tested under, and meets the criteria of paragraph (d) of this section.

(B) A combustion control device tested under paragraph (b) of this section that meets the outlet TOC performance level specified in section E.1(a)(1)(ii) and that establishes a correlation between firebox or combustion chamber temperature and the TOC performance level.

(c) *Control device design analysis to meet the requirements of section E.1(a).* (1) For a condenser, the design analysis must include an analysis of the vent stream composition,

constituent concentrations, flowrate, relative humidity, and temperature, and must establish the design outlet organic compound concentration level, design average temperature of the condenser exhaust vent stream, and the design average temperatures of the coolant fluid at the condenser inlet and outlet.

(2) For a regenerable carbon adsorption system, the design analysis shall include the vent stream composition, constituent concentrations, flowrate, relative humidity, and temperature, and shall establish the design exhaust vent stream organic compound concentration level, adsorption cycle time, number and capacity of carbon beds, type and working capacity of activated carbon used for the carbon beds, design total regeneration stream flow over the period of each complete carbon bed regeneration cycle, design carbon bed temperature after regeneration, design carbon bed regeneration time, and design service life of the carbon.

(3) For a non-regenerable carbon adsorption system, such as a carbon canister, the design analysis shall include the vent stream composition, constituent concentrations, flowrate, relative humidity, and temperature, and shall establish the design exhaust vent stream organic compound concentration level, capacity of the carbon bed, type and working capacity of activated carbon used for the carbon bed, and design carbon replacement interval based on the total carbon working capacity of the control device and source operating schedule. In addition, these systems will incorporate dual carbon canisters in case of emission breakthrough occurring in one canister.

(4) If you and the regulated authority do not agree on a demonstration of control device performance using a design analysis, then you must perform a performance test in accordance with the requirements of paragraph (b) of this section to resolve the disagreement. The regulatory authority may choose to have an authorized representative observe the performance test.

(d) *Performance testing for combustion control devices—manufacturers' performance test.* (1) This paragraph applies to the performance testing of a combustion control device conducted by the device manufacturer. The manufacturer must demonstrate that a specific model of control device achieves the performance requirements in paragraph (d)(11) of this section by conducting a performance test as specified in paragraphs (d)(2) through (10) of this section. You

must submit a test report for each combustion control device in accordance with the requirements in paragraph (d)(12) of this section.

(2) Performance testing must consist of three one-hour (or longer) test runs for each of the four firing rate settings specified in paragraphs (d)(2)(i) through (iv) of this section, making a total of 12 test runs per test. Propene (propylene) gas must be used for the testing fuel. All fuel analyses must be performed by an independent third-party laboratory (not affiliated with the control device manufacturer or fuel supplier).

(i) 90-100 percent of maximum design rate (fixed rate).

(ii) 70-100-70 percent (ramp up, ramp down). Begin the test at 70 percent of the maximum design rate. During the first 5 minutes, incrementally ramp the firing rate to 100 percent of the maximum design rate. Hold at 100 percent for 5 minutes. In the 10-15 minute time range, incrementally ramp back down to 70 percent of the maximum design rate. Repeat three more times for a total of 60 minutes of sampling.

(iii) 30-70-30 percent (ramp up, ramp down). Begin the test at 30 percent of the maximum design rate. During the first 5 minutes, incrementally ramp the firing rate to 70 percent of the maximum design rate. Hold at 70 percent for 5 minutes. In the 10-15 minute time range, incrementally ramp back down to 30 percent of the maximum design rate. Repeat three more times for a total of 60 minutes of sampling.

(iv) 0-30-0 percent (ramp up, ramp down). Begin the test at the minimum firing rate. During the first 5 minutes, incrementally ramp the firing rate to 30 percent of the maximum design rate. Hold at 30 percent for 5 minutes. In the 10-15 minute time range, incrementally ramp back down to the minimum firing rate. Repeat three more times for a total of 60 minutes of sampling.

(3) All models employing multiple enclosures must be tested simultaneously and with all burners operational. Results must be reported for each enclosure individually and for the average of the emissions from all interconnected combustion enclosures/chambers. Control device operating data must be collected continuously throughout the performance test using an

electronic Data Acquisition System. A graphic presentation or strip chart of the control device operating data and emissions test data must be included in the test report in accordance with paragraph (d)(12) of this section. Inlet fuel meter data may be manually recorded provided that all inlet fuel data readings are included in the final report.

(4) Inlet testing must be conducted as specified in paragraphs (d)(4)(i) and (ii) of this section.

(i) The inlet gas flow metering system must be located in accordance with Method 2A, 40 CFR part 60, appendix A-1, (or other approved procedure) to measure inlet gas flow rate at the control device inlet location. You must position the fitting for filling fuel sample containers a minimum of eight pipe diameters upstream of any inlet gas flow monitoring meter.

(ii) Inlet flow rate must be determined using Method 2A, 40 CFR part 60, appendix A-1. Record the start and stop reading for each 60-minute THC test. Record the gas pressure and temperature at 5-minute intervals throughout each 60-minute test.

(5) Inlet gas sampling must be conducted as specified in paragraphs (d)(5)(i) and (ii) of this section.

(i) At the inlet gas sampling location, securely connect a Silonite-coated stainless steel evacuated canister fitted with a flow controller sufficient to fill the canister over a 3-hour period. Filling must be conducted as specified in paragraphs (d)(5)(i)(A) through (C) of this section.

(A) Open the canister sampling valve at the beginning of each test run, and close the canister at the end of each test run.

(B) Fill one canister across the three test runs such that one composite fuel sample exists for each test condition.

(C) Label the canisters individually and record sample information on a chain of custody form.

(ii) Analyze each inlet gas sample using the methods in paragraphs (d)(5)(ii)(A) through (C) of this section. You must include the results in the test report required by paragraph (d)(12) of this section.

(A) Hydrocarbon compounds containing between one and five atoms of carbon plus benzene using ASTM D1945-03.

(B) Hydrogen (H_2), carbon monoxide (CO), carbon dioxide (CO_2), nitrogen (N_2), oxygen (O_2) using ASTM D1945-03.

(C) Higher heating value using ASTM D3588-98 or ASTM D4891-89.

(6) Outlet testing must be conducted in accordance with the criteria in paragraphs (d)(6)(i) through (v) of this section.

(i) Sample and flow rate must be measured in accordance with paragraphs (d)(6)(i)(A) through (B) of this section.

(A) The outlet sampling location must be a minimum of four equivalent stack diameters downstream from the highest peak flame or any other flow disturbance, and a minimum of one equivalent stack diameter upstream of the exit or any other flow disturbance. A minimum of two sample ports must be used.

(B) Flow rate must be measured using Method 1, 40 CFR part 60, appendix A-1 for determining flow measurement traverse point location, and Method 2, 40 CFR part 60, appendix A-1 for measuring duct velocity. If low flow conditions are encountered (i.e., velocity pressure differentials less than 0.05 inches of water) during the performance test, a more sensitive manometer must be used to obtain an accurate flow profile.

(ii) Molecular weight and excess air must be determined as specified in paragraph (d)(7) of this section.

(iii) Carbon monoxide must be determined as specified in paragraph (d)(8) of this section.

(iv) THC must be determined as specified in paragraph (d)(9) of this section.

(v) Visible emissions must be determined as specified in paragraph (d)(10) of this section.

(7) Molecular weight and excess air determination must be performed as specified in paragraphs (d)(7)(i) through (iii) of this section.

(i) An integrated bag sample must be collected during the Method 4, 40 CFR part 60, appendix A-3, moisture test following the procedure specified in paragraphs (d)(7)(i)(A) and (B) of this section. Analyze the bag sample using a gas chromatograph-thermal conductivity detector (GC-TCD) analysis meeting the criteria in paragraphs (d)(7)(i)(C) and (D) of this section.

(A) Collect the integrated sample throughout the entire test, and collect representative volumes from each traverse location.

(B) Purge the sampling line with stack gas before opening the valve and beginning to fill the bag. Clearly label each bag and record sample information on a chain of custody form.

(C) The bag contents must be vigorously mixed prior to the gas chromatograph analysis.

(D) The GC-TCD calibration procedure in Method 3C, 40 CFR part 60, appendix A, must be modified by using EPA Alt-045 as follows: For the initial calibration, triplicate injections of any single concentration must agree within 5 percent of their mean to be valid. The calibration response factor for a single concentration recheck must be within 10 percent of the original calibration response factor for that concentration. If this criterion is not met, repeat the initial calibration using at least three concentration levels.

(ii) Calculate and report the molecular weight of oxygen, carbon dioxide, methane, and nitrogen in the integrated bag sample and include in the test report specified in paragraph (d)(12) of this section. Moisture must be determined using Method 4, 40 CFR part 60, appendix A-3. Traverse both ports with the Method 4, 40 CFR part 60, appendix A-3, sampling train during each test run. Ambient air must not be introduced into the Method 3C, 40 CFR part 60, appendix A-2, integrated bag sample during the port change.

(iii) Excess air must be determined using resultant data from the EPA Method 3C tests and EPA Method 3B, 40 CFR part 60, appendix A, equation 3B-1.

(8) Carbon monoxide must be determined using Method 10, 40 CFR part 60, appendix A. Run the test simultaneously with Method 25A, 40 CFR part 60, appendix A-7 using the same sampling points. An instrument range of 0-10 parts per million by volume-dry (ppmvd) is recommended.

(9) Total hydrocarbon determination must be performed as specified by in paragraphs (d)(9)(i) through (vii) of this section.

(i) Conduct THC sampling using Method 25A, 40 CFR part 60, appendix A-7, except that the option for locating the probe in the center 10 percent of the stack is not allowed. The THC probe must be traversed to 16.7 percent, 50 percent, and 83.3 percent of the stack diameter during each test run.

(ii) A valid test must consist of three Method 25A, 40 CFR part 60, appendix A-7, tests, each no less than 60 minutes in duration.

(iii) A 0-10 parts per million by volume-wet (ppmvw) (as propane) measurement range is preferred; as an alternative a 0-30 ppmvw (as carbon) measurement range may be used.

(iv) Calibration gases must be propane in air and be certified through EPA Protocol 1—"EPA Traceability Protocol for Assay and Certification of Gaseous Calibration Standards," September 1997, as amended August 25, 1999, EPA-600/R-97/121(or more recent if updated since 1999).

(v) THC measurements must be reported in terms of ppmvw as propane.

(vi) THC results must be corrected to 3 percent CO_2, as measured by Method 3C, 40 CFR part 60, appendix A-2. You must use the following equation for this diluent concentration correction:

$$C_{corr} = C_{meas}\left(\frac{3}{CO_{2meas}}\right)$$

Where:

C_{meas} = The measured concentration of the pollutant.

CO_{2meas} = The measured concentration of the CO_2 diluent.

3 = The corrected reference concentration of CO_2 diluent.

C_{corr} = The corrected concentration of the pollutant.

(vii) Subtraction of methane or ethane from the THC data is not allowed in determining results.

(10) Visible emissions must be determined using Method 22, 40 CFR part 60, appendix A. The test must be performed continuously during each test run. A digital color photograph of the exhaust point, taken from the position of the observer and annotated with date and time, must be taken once per test run and the 12 photos included in the test report specified in paragraph (d)(12) of this section.

(11) *Performance test criteria.* (i) The control device model tested must meet the criteria in paragraphs (d)(11)(i)(A) through (D) of this section. These criteria must be reported in the test report required by paragraph (d)(12) of this section.

(A) Method 22, 40 CFR part 60, appendix A, results under paragraph (d)(10) of this section with no indication of visible emissions.

(B) Average Method 25A, 40 CFR part 60, appendix A, results under paragraph (d)(9) of this section equal to or less than 10.0 ppmvw THC as propane corrected to 3.0 percent CO_2.

(C) Average CO emissions determined under paragraph (d)(8) of this section equal to or less than 10 parts ppmvd, corrected to 3.0 percent CO_2.

(D) Excess combustion air determined under paragraph (d)(7) of this section equal to or greater than 150 percent.

(ii) The manufacturer must determine a maximum inlet gas flow rate which must not be exceeded for each control device model to achieve the criteria in paragraph (d)(11)(iii) of this section. The maximum inlet gas flow rate must be included in the test report required by paragraph (d)(12) of this section.

(iii) A control device meeting the criteria in paragraph (d)(11)(i)(A) through (D) of this section must demonstrate a destruction efficiency of 95 percent for VOC regulated under this rule.

(12) The owner or operator of a combustion control device model tested under this paragraph must submit the information listed in paragraphs (d)(12)(i) through (vi) in the test report. Owners or operators who claim that any of the performance test information being submitted is confidential business information (CBI) must submit a complete file including information claimed to be CBI, on a compact disc, flash drive, or other commonly used electronic storage media to the EPA. The electronic media must be clearly marked as CBI and mailed to Attn: CBI Officer; OAQPS CBIO Room 521; 109 T.W. Alexander Drive; RTP, NC 27711. The same file with the CBI omitted must be submitted to Oil_and_Gas_PT@EPA.GOV.

(i) A full schematic of the control device and dimensions of the device components.

(ii) The maximum net heating value of the device.

(iii) The test fuel gas flow range (in both mass and volume). Include the maximum allowable inlet gas flow rate.

(iv) The air/stream injection/assist ranges, if used.

(v) The test conditions listed in paragraphs (d)(12)(v)(A) through (O) of this section, as applicable for the tested model.

(A) Fuel gas delivery pressure and temperature.

(B) Fuel gas moisture range.

(C) Purge gas usage range.

(D) Condensate (liquid fuel) separation range.

(E) Combustion zone temperature range. This is required for all devices that measure this parameter.

(F) Excess combustion air range.

(G) Flame arrestor(s).

(H) Burner manifold.

(I) Pilot flame indicator.

(J) Pilot flame design fuel and calculated or measured fuel usage.

(K) Tip velocity range.

(L) Momentum flux ratio.

(M) Exit temperature range.

(N) Exit flow rate.

(O) Wind velocity and direction.

(vi) The test report must include all calibration quality assurance/quality control data, calibration gas values, gas cylinder certification, strip charts, or other graphic presentations of the data annotated with test times and calibration values.

(e) *Continuous compliance for combustion control devices tested by the manufacturer in accordance with paragraph (d) of this section.* This paragraph applies to the demonstration of compliance for a combustion control device tested under the provisions in paragraph (d) of this

section. Owners or operators must demonstrate that a control device achieves the performance requirements in (d)(11) of this section by installing a device tested under paragraph (d) of this section and complying with the criteria specified in paragraphs (e)(1) through (7) of this section.

(1) The inlet gas flow rate must be equal to or less than the maximum specified by the manufacturer.

(2) A pilot flame must be present at all times of operation.

(3) Devices must be operated with no visible emissions, except for periods not to exceed a total of 1 minute during any 15-minute period. A visible emissions test conducted according to section 11 of EPA Method 22, 40 CFR part 60, appendix A, must be performed at least once every calendar month, separated by at least 15 days between each test. The observation period shall be 15 minutes.

(4) Devices failing the visible emissions test must follow manufacturer's repair instructions, if available, or best combustion engineering practice as outlined in the unit inspection and maintenance plan, to return the unit to compliant operation. All inspection, repair and maintenance activities for each unit must be recorded in a maintenance and repair log and must be available for inspection.

(5) Following return to operation from maintenance or repair activity, each device must pass an EPA Method 22, 40 CFR part 60, appendix A, visual observation as described in paragraph (e)(3) of this section.

(6) If the owner or operator operates a combustion control device model tested under this section, an electronic copy of the performance test results required by this section shall be submitted via email to Oil_and_Gas_PT@EPA.GOV unless the test results for that model of combustion control device are posted at the following Web site: epa.gov/airquality/oilandgas/.

(7) Ensure that each enclosed combustion control device is maintained in a leak free condition.

G Equipment Component VOC Leaks at Natural Gas Processing Plants

G.1 Applicability

(a) The group of all equipment, except compressors, within a process unit located at an onshore natural gas processing plant.

(b) Equipment associated with a compressor station, dehydration unit, sweetening unit, underground storage vessel, field gas gathering system, or liquefied natural gas unit is covered by the requirements of section G.2 if it is located at an onshore natural gas processing plant. Equipment not located at the onshore natural gas processing plant site is exempt from the requirements of section G.2.

(c) The equipment within a process unit subject to VOC emission control requirements located at onshore natural gas processing plants is exempt from this section if they are subject to and controlled according to subparts VVa, GGG or GGGa of 40 CFR part 60.

G.2 What VOC Emission Requirements Apply to Equipment Components at a Natural Gas Processing Plant?

(a) You must comply with the requirements of sections G.5.1 (a), (b), and (d), and sections G.5.4 through G.5.11, except as provided in section G.3.

(b) You may elect to comply with the requirements of sections G.6.1 and G.6.2, as an alternative.

(c) You must comply with the provisions of section G.7 of this section except as provided in paragraph (e) of this section.

(d) You must comply with the provisions of section G.9.8 and G.9.9 of this section except as provided in section G.3.

(e) You must use the following instead of section G.7(d)(1): Each piece of equipment is presumed to be in VOC service or in wet gas service unless an owner or operator demonstrates that the piece of equipment is not in VOC service or in wet gas service. For a piece of equipment to be considered not in VOC service, it must be determined that the VOC content can be reasonably expected never to exceed 10.0 percent by weight. For a piece of equipment to be considered in wet gas service, it must be determined that it contains or contacts the field gas before the extraction step in the process. For purposes of determining the percent VOC content of the process fluid that is contained in or contacts a piece of equipment, procedures that conform to the methods described in ASTM E169-93, E168-92, or E260-96 must be used.

G.3 What Exceptions Apply to the Equipment Leak VOC Emission Control Requirements for Equipment Components at Natural Gas Processing Plants?

(a) You may comply with the following exceptions to the provisions of section G.2(a) and (b).

(b)(1) Each pressure relief device in gas/vapor service may be monitored quarterly and within 5 days after each pressure release to detect leaks by the methods specified in section G.7(b) except as provided in section G.2(c) and in paragraph (b)(4) of this section, and section G.5.4(a) through (c) of this rule.

(2) If an instrument reading of 500 ppm or greater is measured, a leak is detected.

(3)(i) When a leak is detected, it must be repaired as soon as practicable, but no later than 15 calendar days after it is detected, except as provided in section G.5.9.

(ii) A first attempt at repair must be made no later than 5 calendar days after each leak is detected.

(4)(i) Any pressure relief device that is located in a nonfractionating plant that is monitored only by non-plant personnel may be monitored after a pressure release the next time the monitoring personnel are on-site, instead of within 5 days as specified in paragraph (b)(1) of this section and section G.9.4(b)(1).

(ii) No pressure relief device described in paragraph (b)(4)(i) of this section must be allowed to operate for more than 30 days after a pressure release without monitoring.

(c) Sampling connection systems are exempt from the requirements of section G.5.9.

(d) Pumps in light liquid service, valves in gas/vapor and light liquid service, pressure relief devices in gas/vapor service, and connectors in gas/vapor service and in light liquid service that are located at a non-fractionating plant that does not have the design capacity to process 283,200 standard cubic meters per day (scmd) (10 million standard cubic feet per day) or more of field gas are exempt from the routine monitoring requirements of sections G.5.2(a)(1), G.5.7 (a), G.5.11(a), and paragraph (b)(1) of this section.

(e) Pumps in light liquid service, valves in gas/vapor and light liquid service, pressure relief devices in gas/vapor service, and connectors in gas/vapor service and in light liquid service within a process unit that is located in the Alaskan North Slope are exempt from the routine monitoring requirements of sections G.5.2 (a)(1), G.5.7(a), G.5.11(a), and paragraph (b)(1) of this section.

(f) An owner or operator may use the following provisions instead of section G.7(e):

(1) Equipment is in heavy liquid service if the weight percent evaporated is 10 percent or less at 150°C (302°F) as determined by ASTM Method D86-96.

(2) Equipment is in light liquid service if the weight percent evaporated is greater than 10 percent at 150°C (302°F) as determined by ASTM Method D86-96.

(g) An owner or operator may use the following provisions instead of section G.7(b)(2): A calibration drift assessment shall be performed, at a minimum, at the end of each monitoring day. Check the instrument using the same calibration gas(es) that were used to calibrate the instrument before use. Follow the procedures specified in USEPA Method 21 of appendix A-7 of this part, Section 10.1, except do not adjust the meter readout to correspond to the calibration gas value. Record the instrument reading for each scale used as specified in section G.8 (e)(8). Divide these readings by the initial calibration values for each scale and multiply by 100 to

express the calibration drift as a percentage. If any calibration drift assessment shows a negative drift of more than 10 percent from the initial calibration value, then all equipment monitored since the last calibration with instrument readings below the appropriate leak definition and above the leak definition multiplied by (100 minus the percent of negative drift/divided by 100) must be re-monitored. If any calibration drift assessment shows a positive drift of more than 10 percent from the initial calibration value, then, at the owner/operator's discretion, all equipment since the last calibration with instrument readings above the appropriate leak definition and below the leak definition multiplied by (100 plus the percent of positive drift/divided by 100) may be re-monitored.

G.4 How Do I Demonstrate Initial and Continued Compliance with the VOC Emission Control Requirements for Equipment Components at Natural Gas Processing Plants?

You must determine initial compliance with the standards for each equipment component subject to VOC emission control requirements by the compliance date specified by your regulatory authority by complying with the requirements specified in paragraphs (a) through (i) of this section.

For equipment components subject to VOC emission control requirements at natural gas processing plants, initial and continuous compliance with the VOC requirements is demonstrated if you are in compliance with the requirements of section G.2.

G.5 What VOC Emission Control Requirements Apply to Equipment Components at Natural Gas Processing Plants

G.5.1 VOC Emission Control Requirements: General

(a) Each owner or operator subject to the provisions of this rule shall demonstrate compliance with the requirements of sections G.5.1 through G.5.10 for all equipment within 180 days of the compliance date.

(b) Compliance with sections G.5.1 to G.5.10 will be determined by review of records and reports, review of performance test results, and inspection using the methods and procedures specified in G.7.

(c)(1) An owner or operator may request a determination of equivalence of a means of emission limitation to the requirements of sections G.5.2, G.5.3, G.5.5, G.5.6, G.5.7, G.5.8, and G.5.10.

(2) If the permitting authority makes a determination that a means of emission limitation is at least equivalent to the requirements of sections G.5.2, G.5.3, G.5.5, G.5.6, G.5.7, G.5.8, or section G.5.10, an owner or operator shall comply with the requirements of that determination.

(d) Equipment that is in vacuum service is excluded from the requirements of sections G.5.2 through G.5.10 if it is identified as required in section G.8(e)(5).

(e) Equipment that an owner or operator designates as being in VOC service less than 300 hr/yr is excluded from the requirements of sections G.5.2 through G.5.11 if it is identified as required in section G.8(e)(6) and it meets any of the conditions specified in paragraphs (e)(1) through (3) of this section.

(1) The equipment is in VOC service only during startup and shutdown, excluding startup and shutdown between batches of the same campaign for a batch process.

(2) The equipment is in VOC service only during process malfunctions or other emergencies.

(3) The equipment is backup equipment that is in VOC service only when the primary equipment is out of service.

(f)(1) If a dedicated batch process unit operates less than 365 days during a year, an owner or operator may monitor to detect leaks from pumps, valves, and open-ended valves or lines at the frequency specified in the following table instead of monitoring as specified in sections G.5.2, G.5.7, and G.5.2:

Operating Time (percent of hours during year)	Equivalent Monitoring Frequency Time in Use		
	Monthly	**Quarterly**	**Semiannually**
0 to <25	Quarterly	Annually	Annually
25 to <50	Quarterly	Semiannually	Annually
50 to <75	Bimonthly	Three Quarters	Semiannually
75 to 100	Monthly	Quarterly	Semiannually

(2) Pumps and valves that are shared among two or more batch process units that are subject to this subpart may be monitored at the frequencies specified in paragraph (f)(1) of this section, provided the operating time of all such process units is considered.

(3) The monitoring frequencies specified in paragraph (f)(1) of this section are not requirements for monitoring at specific intervals and can be adjusted to accommodate process operations. An owner or operator may monitor at any time during the specified monitoring period (e.g., month, quarter, year), provided the monitoring is conducted at a reasonable interval after completion of the last monitoring campaign. Reasonable intervals are defined in paragraphs (f)(3)(i) through (iv) of this section.

(i) When monitoring is conducted quarterly, monitoring events must be separated by at least 30 calendar days.

(ii) When monitoring is conducted semiannually (*i.e.*, once every 2 quarters), monitoring events must be separated by at least 60 calendar days.

(iii) When monitoring is conducted in 3 quarters per year, monitoring events must be separated by at least 90 calendar days.

(iv) When monitoring is conducted annually, monitoring events must be separated by at least 120 calendar days.

(g) If the storage vessel is shared with multiple process units, the process unit with the greatest annual amount of stored materials (predominant use) is the process unit the storage vessel is assigned to. If the storage vessel is shared equally among process units, and one of the process units has equipment subject to this subpart, the storage vessel is assigned to that process

unit. If the storage vessel is shared equally among process units, none of which have equipment subject to this subpart of this part, the storage vessel is assigned to any process unit subject to subpart VV of this part. If the predominant use of the storage vessel varies from year to year, then the owner or operator must estimate the predominant use initially and reassess every 3 years. The owner or operator must keep records of the information and supporting calculations that show how predominant use is determined. All equipment on the storage vessel must be monitored when in VOC service.

G.5.2 What Equipment Component VOC Emission Control Requirements Apply to Pumps in Light Liquid Service?

(a)(1) Each pump in light liquid service shall be monitored monthly to detect leaks by the methods specified in section G.7(b), except as provided in sections G.5.1(c) and (f) and paragraphs (d), (e), and (f) of this section. A pump that begins operation in light liquid service after the compliance date for the process unit must be monitored for the first time within 30 days after the end of its startup period, except for a pump that replaces a leaking pump and except as provided in section G.5.1(c) and paragraphs (d), (e), and (f) of this section.

(2) Each pump in light liquid service shall be checked by visual inspection each calendar week for indications of liquids dripping from the pump seal, except as provided in section G.5.1(f).

(b)(1) The instrument reading that defines a leak is specified in paragraphs (b)(1)(i) and (ii) of this section.

(i) 5,000 parts per million (ppm) or greater for pumps handling polymerizing monomers;

(ii) 2,000 ppm or greater for all other pumps.

(2) If there are indications of liquids dripping from the pump seal, the owner or operator shall follow the procedure specified in either paragraph (b)(2)(i) or (ii) of this section. This requirement does not apply to a pump that was monitored after a previous weekly inspection and

the instrument reading was less than the concentration specified in paragraph (b)(1)(i) or (ii) of this section, whichever is applicable.

(i) Monitor the pump within 5 days as specified in section G.7(b). A leak is detected if the instrument reading measured during monitoring indicates a leak as specified in paragraph (b)(1)(i) or (ii) of this section, whichever is applicable. The leak shall be repaired using the procedures in paragraph (c) of this section.

(ii) Designate the visual indications of liquids dripping as a leak, and repair the leak using either the procedures in paragraph (c) of this section or by eliminating the visual indications of liquids dripping.

(c)(1) When a leak is detected, it shall be repaired as soon as practicable, but not later than 15 calendar days after it is detected, except as provided in section G.5.9.

(2) A first attempt at repair shall be made no later than 5 calendar days after each leak is detected. First attempts at repair include, but are not limited to, the practices described in paragraphs (c)(2)(i) and (ii) of this section, where practicable.

(i) Tightening the packing gland nuts;

(ii) Ensuring that the seal flush is operating at design pressure and temperature.

(d) Each pump equipped with a dual mechanical seal system that includes a barrier fluid system is exempt from the requirements of paragraph (a) of this section, provided the requirements specified in paragraphs (d)(1) through (6) of this section are met.

(1) Each dual mechanical seal system is:

(i) Operated with the barrier fluid at a pressure that is at all times greater than the pump stuffing box pressure; or

(ii) Equipped with a barrier fluid degassing reservoir that is routed to a process or fuel gas system or connected by a closed vent system to a control device that complies with the requirements of section G.5.10; or

(iii) Equipped with a system that purges the barrier fluid into a process stream with zero VOC emissions to the atmosphere.

(2) The barrier fluid system is in heavy liquid service or is not in VOC service.

(3) Each barrier fluid system is equipped with a sensor that will detect failure of the seal system, the barrier fluid system, or both.

(4)(i) Each pump is checked by visual inspection, each calendar week, for indications of liquids dripping from the pump seals.

(ii) If there are indications of liquids dripping from the pump seal at the time of the weekly inspection, the owner or operator shall follow the procedure specified in either paragraph (d)(4)(ii)(A) or (B) of this section prior to the next required inspection.

(A) Monitor the pump within 5 days as specified in section G.7(b) to determine if there is a leak of VOC in the barrier fluid. If an instrument reading of 2,000 ppm or greater is measured, a leak is detected.

(B) Designate the visual indications of liquids dripping as a leak.

(5)(i) Each sensor as described in paragraph (d)(3) is checked daily or is equipped with an audible alarm.

(ii) The owner or operator determines, based on design considerations and operating experience, a criterion that indicates failure of the seal system, the barrier fluid system, or both.

(iii) If the sensor indicates failure of the seal system, the barrier fluid system, or both, based on the criterion established in paragraph (d)(5)(ii) of this section, a leak is detected.

(6)(i) When a leak is detected pursuant to paragraph (d)(4)(ii)(A) of this section, it shall be repaired as specified in paragraph (c) of this section.

(ii) A leak detected pursuant to paragraph (d)(5)(iii) of this section shall be repaired within 15 days of detection by eliminating the conditions that activated the sensor.

(iii) A designated leak pursuant to paragraph (d)(4)(ii)(B) of this section shall be repaired within 15 days of detection by eliminating visual indications of liquids dripping.

(e) Any pump that is designated, as described in section G.8(e)(1) and (2), for no detectable emissions, as indicated by an instrument reading of less than 500 ppm above background, is exempt from the requirements of paragraphs (a), (c), and (d) of this section if the pump:

(1) Has no externally actuated shaft penetrating the pump housing;

(2) Is demonstrated to be operating with no detectable emissions as indicated by an instrument reading of less than 500 ppm above background as measured by the methods specified in section G.7(c); and

(3) Is tested for compliance with paragraph (e)(2) of this section initially upon designation, annually, and at other times requested by the permitting authority

(f) If any pump is equipped with a closed vent system capable of capturing and transporting any leakage from the seal or seals to a process or to a fuel gas system or to a control device that complies with the requirements of section G.5.10, it is exempt from paragraphs (a) through (e) of this section.

(g) Any pump that is designated, as described in section G.8(f)(1), as an unsafe-to-monitor pump is exempt from the monitoring and inspection requirements of paragraphs (a) and (d)(4) through (6) of this section if:

(1) The owner or operator of the pump demonstrates that the pump is unsafe-to-monitor because monitoring personnel would be exposed to an immediate danger as a consequence of complying with paragraph (a) of this section; and

(2) The owner or operator of the pump has a written plan that requires monitoring of the pump as frequently as practicable during safe-to-monitor times, but not more frequently than the periodic monitoring schedule otherwise applicable, and repair of the equipment according to the procedures in paragraph (c) of this section if a leak is detected.

(h) Any pump that is located within the boundary of an unmanned plant site is exempt from the weekly visual inspection requirement of paragraphs (a)(2) and (d)(4) of this section, and the daily requirements of paragraph (d)(5) of this section, provided that each pump is visually inspected as often as practicable and at least monthly.

G.5.3 What Equipment Component VOC Emission Control Requirements Apply to Compressors?

(a) Each compressor shall be equipped with a seal system that includes a barrier fluid system and that prevents leakage of VOC to the atmosphere, except as provided in section G.5.1(c) and paragraphs (h), (i), and (j) of this section.

(b) Each compressor seal system as required in paragraph (a) of this section shall be:

(1) Operated with the barrier fluid at a pressure that is greater than the compressor stuffing box pressure; or

(2) Equipped with a barrier fluid system degassing reservoir that is routed to a process or fuel gas system or connected by a closed vent system to a control device that complies with the requirements of section G.5.10; or

(3) Equipped with a system that purges the barrier fluid into a process stream with zero VOC emissions to the atmosphere.

(c) The barrier fluid system shall be in heavy liquid service or shall not be in VOC service.

(d) Each barrier fluid system as described in paragraph (a) shall be equipped with a sensor that will detect failure of the seal system, barrier fluid system, or both.

(e)(1) Each sensor as required in paragraph (d) of this section shall be checked daily or shall be equipped with an audible alarm.

(2) The owner or operator shall determine, based on design considerations and operating experience, a criterion that indicates failure of the seal system, the barrier fluid system, or both.

(f) If the sensor indicates failure of the seal system, the barrier system, or both based on the criterion determined under paragraph (e)(2) of this section, a leak is detected.

(g)(1) When a leak is detected, it shall be repaired as soon as practicable, but not later than 15 calendar days after it is detected, except as provided in section G.5.9.

(2) A first attempt at repair shall be made no later than 5 calendar days after each leak is detected.

(h) A compressor is exempt from the requirements of paragraphs (a) and (b) of this section, if it is equipped with a closed vent system to capture and transport leakage from the compressor drive shaft back to a process or fuel gas system or to a control device that complies with the requirements of section G.5.10, except as provided in paragraph (i) of this section.

(i) Any compressor that is designated, as described in section G.8(e)(1) and (2), for no detectable emissions, as indicated by an instrument reading of less than 500 ppm above background, is exempt from the requirements of paragraphs (a) through (h) of this section if the compressor:

(1) Is demonstrated to be operating with no detectable emissions, as indicated by an instrument reading of less than 500 ppm above background, as measured by the methods specified in section G.7(c); and

(2) Is tested for compliance with paragraph (i)(1) of this section initially upon designation, annually, and at other times requested by the permitting authority.

G.5.4 What Equipment Component VOC Emission Control Requirements Apply to Pressure Relief Devices in Gas/Vapor Service?

(a) Except during pressure releases, each pressure relief device in gas/vapor service shall be operated with no detectable emissions, as indicated by an instrument reading of less than 500 ppm above background, as determined by the methods specified in section G.7(c).

(b)(1) After each pressure release, the pressure relief device shall be returned to a condition of no detectable emissions, as indicated by an instrument reading of less than 500 ppm above background, as soon as practicable, but no later than 5 calendar days after the pressure release, except as provided in section G.5.9.

(2) No later than 5 calendar days after the pressure release, the pressure relief device shall be monitored to confirm the conditions of no detectable emissions, as indicated by an instrument reading of less than 500 ppm above background, by the methods specified in section G.7(c).

(c) Any pressure relief device that is routed to a process or fuel gas system or equipped with a closed vent system capable of capturing and transporting leakage through the pressure relief device to a control device as described in section G.5.10 is exempted from the requirements of paragraphs (a) and (b) of this section.

(d)(1) Any pressure relief device that is equipped with a rupture disk upstream of the pressure relief device is exempt from the requirements of paragraphs (a) and (b) of this section, provided the owner or operator complies with the requirements in paragraph (d)(2) of this section.

(2) After each pressure release, a new rupture disk shall be installed upstream of the pressure relief device as soon as practicable, but no later than 5 calendar days after each pressure release, except as provided in section G.5.9.

G.9.5 What Equipment Component VOC Emission Control Requirements Apply to Sampling Connection Systems?

(a) Each sampling connection system shall be equipped with a closed-purge, closed-loop, or closed-vent system, except as provided in section G.5.1(c) and paragraph (c) of this section.

(b) Each closed-purge, closed-loop, or closed-vent system as required in paragraph (a) of this section shall comply with the requirements specified in paragraphs (b)(1) through (4) of this section.

(1) Gases displaced during filling of the sample container are not required to be collected or captured.

(2) Containers that are part of a closed-purge system must be covered or closed when not being filled or emptied.

(3) Gases remaining in the tubing or piping between the closed-purge system valve(s) and sample container valve(s) after the valves are closed and the sample container is disconnected are not required to be collected or captured.

(4) Each closed-purge, closed-loop, or closed-vent system shall be designed and operated to meet requirements in either paragraph (b)(4)(i), (ii), (iii), or (iv) of this section.

(i) Return the purged process fluid directly to the process line.

(ii) Collect and recycle the purged process fluid to a process.

(iii) Capture and transport all the purged process fluid to a control device that complies with the requirements of section G.5.10.

(iv) Collect, store, and transport the purged process fluid to any of the following systems or facilities:

(A) A waste management unit as defined in 40 CFR 63.111, if the waste management unit is subject to and operated in compliance with the provisions of 40 CFR part 63, subpart G, applicable to Group 1 wastewater streams;

(B) A treatment, storage, or disposal facility subject to regulation under 40 CFR part 262, 264, 265, or 266;

(C) A facility permitted, licensed, or registered by a state to manage municipal or industrial solid waste, if the process fluids are not hazardous waste as defined in 40 CFR part 261;

(D) A waste management unit subject to and operated in compliance with the treatment requirements of 40 CFR 61.348(a), provided all waste management units that collect, store, or transport the purged process fluid to the treatment unit are subject to and operated in compliance with the management requirements of 40 CFR 61.343 through 40 CFR 61.347; or

(E) A device used to burn off-specification used oil for energy recovery in accordance with 40 CFR part 279, subpart G, provided the purged process fluid is not hazardous waste as defined in 40 CFR part 261.

(c) In-situ sampling systems and sampling systems without purges are exempt from the requirements of paragraphs (a) and (b) of this section.

G.5.6 What Equipment Component VOC Emission Control Requirements Apply to Open-Ended Valves or Lines?

(a)(1) Each open-ended valve or line shall be equipped with a cap, blind flange, plug, or a second valve, except as provided in section G.5.1(c) and paragraphs (d) and (e) of this section.

(2) The cap, blind flange, plug, or second valve shall seal the open end at all times except during operations requiring process fluid flow through the open-ended valve or line.

(b) Each open-ended valve or line equipped with a second valve shall be operated in a manner such that the valve on the process fluid end is closed before the second valve is closed.

(c) When a double block-and-bleed system is being used, the bleed valve or line may remain open during operations that require venting the line between the block valves but shall comply with paragraph (a) of this section at all other times.

(d) Open-ended valves or lines in an emergency shutdown system which are designed to open automatically in the event of a process upset are exempt from the requirements of paragraphs (a), (b), and (c) of this section.

(e) Open-ended valves or lines containing materials which would auto-catalytically polymerize or would present an explosion, serious overpressure, or other safety hazard if capped or equipped with a double block and bleed system as specified in paragraphs (a) through (c) of this section are exempt from the requirements of paragraphs (a) through (c) of this section.

G.5.7 What Equipment Component VOC Emission Control Requirements Apply to Valves in Gas/Vapor Service and in Light Liquid Service?

(a)(1) Each valve shall be monitored monthly to detect leaks by the methods specified in G.7(b) and shall comply with paragraphs (b) through (e) of this section, except as provided in paragraphs (f), (g), and (h) of this section, section G.5.1(c) and (f), and sections G.6.1 and G.6.2.

(2) A valve that begins operation in gas/vapor service or light liquid service after the compliance date for the process unit must be monitored according to paragraphs (a)(2)(i) or (ii), except for a valve that replaces a leaking valve and except as provided in paragraphs (f), (g), and (h) of this section, section G.5.1(c), and sections G.6.1 and G.6.2.

(i) Monitor the valve as in paragraph (a)(1) of this section. The valve must be monitored for the first time within 30 days after the end of its startup period to ensure proper installation.

(ii) If the existing valves in the process unit are monitored in accordance with section G.6.1 or section G.6.2, count the new valve as leaking when calculating the percentage of valves leaking as described in section G.6.2(b)(5). If less than 2.0 percent of the valves are leaking for that process unit, the valve must be monitored for the first time during the next scheduled monitoring event for existing valves in the process unit or within 90 days, whichever comes first.

(b) If an instrument reading of 500 ppm or greater is measured, a leak is detected.

(c)(1)(i) Any valve for which a leak is not detected for 2 successive months may be monitored the first month of every quarter, beginning with the next quarter, until a leak is detected.

(ii) As an alternative to monitoring all of the valves in the first month of a quarter, an owner or operator may elect to subdivide the process unit into two or three subgroups of valves and monitor each subgroup in a different month during the quarter, provided each subgroup is monitored every 3 months. The owner or operator must keep records of the valves assigned to each subgroup.

(2) If a leak is detected, the valve shall be monitored monthly until a leak is not detected for 2 successive months.

(d)(1) When a leak is detected, it shall be repaired as soon as practicable, but no later than 15 calendar days after the leak is detected, except as provided in section G.5.9.

(2) A first attempt at repair shall be made no later than 5 calendar days after each leak is detected.

(e) First attempts at repair include, but are not limited to, the following best practices where practicable:

(1) Tightening of bonnet bolts;

(2) Replacement of bonnet bolts;

(3) Tightening of packing gland nuts;

(4) Injection of lubricant into lubricated packing.

(f) Any valve that is designated, as described in section G.8(e)(2), for no detectable emissions, as indicated by an instrument reading of less than 500 ppm above background, is exempt from the requirements of paragraph (a) of this section if the valve:

(1) Has no external actuating mechanism in contact with the process fluid,

(2) Is operated with emissions less than 500 ppm above background as determined by the method specified in section G.7(c), and

(3) Is tested for compliance with paragraph (f)(2) of this section initially upon designation, annually, and at other times requested by the permitting authority.

(g) Any valve that is designated, as described in section G.8(f)(1), as an unsafe-to-monitor valve is exempt from the requirements of paragraph (a) of this section if:

(1) The owner or operator of the valve demonstrates that the valve is unsafe to monitor because monitoring personnel would be exposed to an immediate danger as a consequence of complying with paragraph (a) of this section, and

(2) The owner or operator of the valve adheres to a written plan that requires monitoring of the valve as frequently as practicable during safe-to-monitor times.

(h) Any valve that is designated, as described in section G.8(f)(2), as a difficult-to-monitor valve is exempt from the requirements of paragraph (a) of this section if:

(1) The owner or operator of the valve demonstrates that the valve cannot be monitored without elevating the monitoring personnel more than 2 meters above a support surface.

(2) The process unit within which the valve is located either has less than 3.0 percent of its total number of valves designated as difficult-to-monitor by the owner or operator.

(3) The owner or operator of the valve follows a written plan that requires monitoring of the valve at least once per calendar year.

G.5.8 What Equipment Component VOC Emission Control Requirements Apply to Pumps, Valves, and Connectors in Heavy Liquid Service and Pressure Relief Devices in Light Liquid or Heavy Liquid Service?

(a) If evidence of a potential leak is found by visual, audible, olfactory, or any other detection method at pumps, valves, and connectors in heavy liquid service and pressure relief devices in light liquid or heavy liquid service, the owner or operator shall follow either one of the following procedures:

(1) The owner or operator shall monitor the equipment within 5 days by the method specified in section G.7(b) and shall comply with the requirements of paragraphs (b) through (d) of this section.

(2) The owner or operator shall eliminate the visual, audible, olfactory, or other indication of a potential leak within 5 calendar days of detection.

(b) If an instrument reading of 10,000 ppm or greater is measured, a leak is detected.

(c)(1) When a leak is detected, it shall be repaired as soon as practicable, but not later than 15 calendar days after it is detected, except as provided in section G.5.9.

(2) The first attempt at repair shall be made no later than 5 calendar days after each leak is detected.

(d) First attempts at repair include, but are not limited to, the best practices described under sections G.5.2(c)(2) and G.5.7(e).

G.5.9 What Delay of Repair of Equipment Component Requirements Apply When Equipment Component Leaks Have Been Detected?

(a) Delay of repair of equipment for which leaks have been detected will be allowed if repair within 15 days is technically infeasible without a process unit shutdown. Repair of this equipment shall occur before the end of the next process unit shutdown. Monitoring to verify repair must occur within 15 days after startup of the process unit.

(b) Delay of repair of equipment will be allowed for equipment which is isolated from the process and which does not remain in VOC service.

(c) Delay of repair for valves and connectors will be allowed if:

(1) The owner or operator demonstrates that emissions of purged material resulting from immediate repair are greater than the fugitive emissions likely to result from delay of repair, and

(2) When repair procedures are effected, the purged material is collected and destroyed or recovered in a control device complying with section G.5.10.

(d) Delay of repair for pumps will be allowed if:

(1) Repair requires the use of a dual mechanical seal system that includes a barrier fluid system, and

(2) Repair is completed as soon as practicable, but not later than 6 months after the leak was detected.

(e) Delay of repair beyond a process unit shutdown will be allowed for a valve, if valve assembly replacement is necessary during the process unit shutdown, valve assembly supplies have been depleted, and valve assembly supplies had been sufficiently stocked before the supplies were depleted. Delay of repair beyond the next process unit shutdown will not be allowed unless the next process unit shutdown occurs sooner than 6 months after the first process unit shutdown.

(f) When delay of repair is allowed for a leaking pump, valve, or connector that remains in service, the pump, valve, or connector may be considered to be repaired and no longer subject to delay of repair requirements if two consecutive monthly monitoring instrument readings are below the leak definition.

G.5.10 What VOC Emission Control Requirements Apply for Closed Vent Systems and Control Devices?

(a) Owners or operators of closed vent systems and control devices used to comply with provisions of this rule shall comply with the provisions of this section.

(b) Vapor recovery systems (for example, condensers and absorbers) shall be designed and operated to recover the VOC emissions vented to them with an efficiency of 95 percent or greater.

(c) Each enclosed combustion device (e.g., thermal vapor incinerator, catalytic vapor incinerator, boiler, or process heater) shall be designed to reduce the mass content of VOC emissions by 95 percent or greater in accordance with the requirements of section F(b).

(d) Flares used to comply with this subpart shall comply with the requirements of §60.18.

(e) Owners or operators of control devices used to comply with the provisions of this rule shall monitor these control devices to ensure that they are operated and maintained in conformance with their designs.

(f) Except as provided in paragraphs (i) through (k) of this section, each closed vent system shall be inspected according to the procedures and schedule specified in paragraphs (f)(1) and (2) of this section.

(1) If the vapor collection system or closed vent system is constructed of hard-piping, the owner or operator shall comply with the requirements specified in paragraphs (f)(1)(i) and (ii) of this section:

(i) Conduct an initial inspection according to the procedures in section G.7 (b); and

(ii) Conduct annual visual inspections for visible, audible, or olfactory indications of leaks.

(2) If the vapor collection system or closed vent system is constructed of ductwork, the owner or operator shall:

(i) Conduct an initial inspection according to the procedures in section G.7(b); and

(ii) Conduct annual inspections according to the procedures in section G.7 (b).

(g) Leaks, as indicated by an instrument reading greater than 500 ppmv above background or by visual inspections, shall be repaired as soon as practicable except as provided in paragraph (h) of this section.

(1) A first attempt at repair shall be made no later than 5 calendar days after the leak is detected.

(2) Repair shall be completed no later than 15 calendar days after the leak is detected.

(h) Delay of repair of a closed vent system for which leaks have been detected is allowed if the repair is technically infeasible without a process unit shutdown or if the owner or operator determines that emissions resulting from immediate repair would be greater than the fugitive emissions likely to result from delay of repair. Repair of such equipment shall be complete by the end of the next process unit shutdown.

(i) If a vapor collection system or closed vent system is operated under a vacuum, it is exempt from the inspection requirements of paragraphs (f)(1)(i) and (f)(2) of this section.

(j) Any parts of the closed vent system that are designated, as described in paragraph (l)(1) of this section, as unsafe to inspect are exempt from the inspection requirements of paragraphs (f)(1)(i) and (f)(2) of this section if they comply with the requirements specified in paragraphs (j)(1) and (2) of this section:

(1) The owner or operator determines that the equipment is unsafe to inspect because inspecting personnel would be exposed to an imminent or potential danger as a consequence of complying with paragraphs (f)(1)(i) or (f)(2) of this section; and

(2) The owner or operator has a written plan that requires inspection of the equipment as frequently as practicable during safe-to-inspect times.

(k) Any parts of the closed vent system that are designated, as described in paragraph (l)(2) of this section, as difficult to inspect are exempt from the inspection requirements of paragraphs (f)(1)(i) and (f)(2) of this section if they comply with the requirements specified in paragraphs (k)(1) through (3) of this section:

(1) The owner or operator determines that the equipment cannot be inspected without elevating the inspecting personnel more than 2 meters above a support surface; and

(2) The owner or operator designates less than 3.0 percent of the total number of closed vent system equipment as difficult to inspect; and

(3) The owner or operator has a written plan that requires inspection of the equipment at least once every 5 years. A closed vent system is exempt from inspection if it is operated under a vacuum.

(l) The owner or operator shall record the information specified in paragraphs (l)(1) through (5) of this section.

(1) Identification of all parts of the closed vent system that are designated as unsafe to inspect, an explanation of why the equipment is unsafe to inspect, and the plan for inspecting the equipment.

(2) Identification of all parts of the closed vent system that are designated as difficult to inspect, an explanation of why the equipment is difficult to inspect, and the plan for inspecting the equipment.

(3) For each inspection during which a leak is detected, a record of the information specified in section G.8 (c).

(4) For each inspection conducted in accordance with section G.7 (b) during which no leaks are detected, a record that the inspection was performed, the date of the inspection, and a statement that no leaks were detected.

(5) For each visual inspection conducted in accordance with paragraph (f)(1)(ii) of this section during which no leaks are detected, a record that the inspection was performed, the date of the inspection, and a statement that no leaks were detected.

(m) Closed vent systems and control devices used to comply with provisions of this rule shall be operated at all times when emissions may be vented to them.

G.5.11 What VOC Emission Control Requirements Apply to Connectors in Gas/Vapor Service and in Light Liquid Service?

(a) The owner or operator shall initially monitor all connectors in the process unit for leaks by the later of either 12 months after the compliance date. If all connectors in the process unit have been monitored for leaks prior to the compliance date, no initial monitoring is required provided either no process changes have been made since the monitoring or the owner or operator can determine that the results of the monitoring, with or without adjustments, reliably demonstrate compliance despite process changes. If required to monitor because of a process change, the owner or operator is required to monitor only those connectors involved in the process change.

(b) Except as allowed in sections G.5.1(c) and G.5.10, or as specified in paragraph (e) of this section, the owner or operator shall monitor all connectors in gas and vapor and light liquid service as specified in paragraphs (a) and (b)(3) of this section.

(1) The connectors shall be monitored to detect leaks by the method specified in section G.7 (b) and, as applicable, section G.7(c).

(2) If an instrument reading greater than or equal to 500 ppm is measured, a leak is detected.

(3) The owner or operator shall perform monitoring, subsequent to the initial monitoring required in paragraph (a) of this section, as specified in paragraphs (b)(3)(i) through (iii) of this section, and shall comply with the requirements of paragraphs (b)(3)(iv) and (v) of this section. The required period in which monitoring must be conducted shall be determined from paragraphs (b)(3)(i) through (iii) of this section using the monitoring results from the preceding monitoring period. The percent leaking connectors shall be calculated as specified in paragraph (c) of this section.

(i) If the percent leaking connectors in the process unit was greater than or equal to 0.5 percent, then monitor within 12 months (1 year).

(ii) If the percent leaking connectors in the process unit was greater than or equal to 0.25 percent but less than 0.5 percent, then monitor within 4 years. An owner or operator may comply with the requirements of this paragraph by monitoring at least 40 percent of the connectors within 2 years of the start of the monitoring period, provided all connectors have been monitored by the end of the 4-year monitoring period.

(iii) If the percent leaking connectors in the process unit was less than 0.25 percent, then monitor as provided in paragraph (b)(3)(iii)(A) of this section and either paragraph (b)(3)(iii)(B) or (b)(3)(iii)(C) of this section, as appropriate.

(A) An owner or operator shall monitor at least 50 percent of the connectors within 4 years of the start of the monitoring period.

(B) If the percent of leaking connectors calculated from the monitoring results in paragraph (b)(3)(iii)(A) of this section is greater than or equal to 0.35 percent of the monitored connectors, the owner or operator shall monitor as soon as practical, but within the next 6 months, all connectors that have not yet been monitored during the monitoring period. At the conclusion of monitoring, a new monitoring period shall be started pursuant to paragraph (b)(3) of this section, based on the percent of leaking connectors within the total monitored connectors.

(C) If the percent of leaking connectors calculated from the monitoring results in paragraph (b)(3)(iii)(A) of this section is less than 0.35 percent of the monitored connectors, the

owner or operator shall monitor all connectors that have not yet been monitored within 8 years of the start of the monitoring period.

(iv) If, during the monitoring conducted pursuant to paragraphs (b)(3)(i) through (iii) of this section, a connector is found to be leaking, it shall be re-monitored once within 90 days after repair to confirm that it is not leaking.

(v) The owner or operator shall keep a record of the start date and end date of each monitoring period under this section for each process unit.

(c) For use in determining the monitoring frequency, as specified in paragraphs (a) and (b)(3) of this section, the percent leaking connectors as used in paragraphs (a) and (b)(3) of this section shall be calculated by using the following equation:

$$\%C_L = C_L / C_t * 100$$

Where:

$\%C_L$ = Percent of leaking connectors as determined through periodic monitoring required in paragraphs (a) and (b)(3)(i) through (iii) of this section.

C_L = Number of connectors measured at 500 ppm or greater, by the method specified in X.G.7(b).

C_t = Total number of monitored connectors in the process unit.

(d) When a leak is detected pursuant to paragraphs (a) and (b) of this section, it shall be repaired as soon as practicable, but not later than 15 calendar days after it is detected, except as provided in section G.5.9. A first attempt at repair as defined in this rule shall be made no later than 5 calendar days after the leak is detected.

(e) Any connector that is designated, as described in section G.8(f)(1), as an unsafe-to-monitor connector is exempt from the requirements of paragraphs (a) and (b) of this section if:

(1) The owner or operator of the connector demonstrates that the connector is unsafe-to-monitor because monitoring personnel would be exposed to an immediate danger as a consequence of complying with paragraphs (a) and (b) of this section; and

(2) The owner or operator of the connector has a written plan that requires monitoring of the connector as frequently as practicable during safe-to-monitor times, but not more frequently than the periodic monitoring schedule otherwise applicable, and repair of the equipment according to the procedures in paragraph (d) of this section if a leak is detected.

(f) *Inaccessible, ceramic, or ceramic-lined connectors.* (1) Any connector that is inaccessible or that is ceramic or ceramic-lined (e.g., porcelain, glass, or glass-lined), is exempt from the monitoring requirements of paragraphs (a) and (b) of this section, from the leak repair requirements of paragraph (d) of this section, and from recordkeeping and reporting requirements. An inaccessible connector is one that meets any of the provisions specified in paragraphs (f)(1)(i) through (vi) of this section, as applicable:

(i) Buried;

(ii) Insulated in a manner that prevents access to the connector by a monitor probe;

(iii) Obstructed by equipment or piping that prevents access to the connector by a monitor probe;

(iv) Unable to be reached from a wheeled scissor-lift or hydraulic-type scaffold that would allow access to connectors up to 7.6 meters (25 feet) above the ground;

(v) Inaccessible because it would require elevating the monitoring personnel more than 2 meters (7 feet) above a permanent support surface or would require the erection of scaffold; or

(vi) Not able to be accessed at any time in a safe manner to perform monitoring. Unsafe access includes, but is not limited to, the use of a wheeled scissor-lift on unstable or uneven terrain, the use of a motorized man-lift basket in areas where an ignition potential exists, or access would require near proximity to hazards such as electrical lines, or would risk damage to equipment.

(2) If any inaccessible, ceramic, or ceramic-lined connector is observed by visual, audible, olfactory, or other means to be leaking, the visual, audible, olfactory, or other indications of a leak to the atmosphere shall be eliminated as soon as practical.

(g) Except for instrumentation systems and inaccessible, ceramic, or ceramic-lined connectors meeting the provisions of paragraph (f) of this section, identify the connectors subject to the requirements of this rule. Connectors need not be individually identified if all connectors in a designated area or length of pipe subject to the provisions of this rule are identified as a group, and the number of connectors subject to the requirements is indicated.

G.6 Alternative Standards

G.6.1 Alternative Standards for Valves—Allowable Percentage of Valves Leaking

(a) An owner or operator may elect to comply with an allowable percentage of valves leaking of equal to or less than 2.0 percent.

(b) The following requirements shall be met if an owner or operator wishes to comply with an allowable percentage of valves leaking:

(1) An owner or operator must notify the permitting authority that the owner or operator has elected to comply with the allowable percentage of valves leaking before implementing this alternative standard, as specified in section G.9(d).

(2) A performance test as specified in paragraph (c) of this section shall be conducted initially upon designation, annually, and at other times requested by the permitting authority.

(3) If a valve leak is detected, it shall be repaired in accordance with section G.5.7(d) and (e).

(c) Performance tests shall be conducted in the following manner:

(1) All valves in gas/vapor and light liquid service within the natural gas processing plant subject to VOC emission control requirements shall be monitored within 1 week by the methods specified in section G.7(b).

(2) If an instrument reading of 500 ppm or greater is measured, a leak is detected.

(3) The leak percentage shall be determined by dividing the number of valves for which leaks are detected by the number of valves in gas/vapor and light liquid service within the natural gas processing plant subject to VOC emission control requirements.

(d) Owners and operators who elect to comply with this alternative standard shall not have a natural gas processing plant subject to the equipment component VOC emission control requirements with a leak percentage greater than 2.0 percent, determined as described in section G.7(h).

G.6.2 Alternative Standards for Valves—Skip Period Leak Detection and Repair

(a)(1) An owner or operator may elect to comply with one of the alternative work practices specified in paragraphs (b)(2) and (3) of this section.

(2) An owner or operator must notify the permitting authority before implementing one of the alternative work practices.

(b)(1) An owner or operator shall comply initially with the requirements for valves in gas/vapor service and valves in light liquid service, as described in section G.5.7.

(2) After 2 consecutive quarterly leak detection periods with the percent of valves leaking equal to or less than 2.0, an owner or operator may begin to skip 1 of the quarterly leak detection periods for the valves in gas/vapor and light liquid service.

(3) After 5 consecutive quarterly leak detection periods with the percent of valves leaking equal to or less than 2.0, an owner or operator may begin to skip 3 of the quarterly leak detection periods for the valves in gas/vapor and light liquid service.

(4) If the percent of valves leaking is greater than 2.0, the owner or operator shall comply with the requirements as described in section G.5.7 but can again elect to use this section.

(5) The percent of valves leaking shall be determined as described in section G.7(h).

(6) An owner or operator must keep a record of the percent of valves found leaking during each leak detection period.

(7) A valve that begins operation in gas/vapor service or light liquid service after the compliance date for a process unit following one of the alternative standards in this section must be monitored in accordance with section G.5.7(a)(2)(i) or (ii) before the provisions of this section can be applied to that valve.

G.7 Equipment Leak Test Methods and Procedures

(a) In conducting the performance tests, the owner or operator shall use as reference methods and procedures the test methods in appendix A of this part or other methods and procedures as specified in this section.

(b) The owner or operator shall determine compliance with the standards in sections G.5.1 through G.5.11, and as follows:

(1) USEPA Method 21 shall be used to determine the presence of leaking sources. The instrument shall be calibrated before use each day of its use by the procedures specified in USEPA Method 21 of appendix A-7 of this part. The following calibration gases shall be used:

(i) Zero air (less than 10 ppm of hydrocarbon in air); and

(ii) A mixture of methane or n-hexane and air at a concentration no more than 2,000 ppm greater than the leak definition concentration of the equipment monitored. If the monitoring instrument's design allows for multiple calibration scales, then the lower scale shall be calibrated with a calibration gas that is no higher than 2,000 ppm above the concentration specified as a leak, and the highest scale shall be calibrated with a calibration gas that is approximately equal to

10,000 ppm. If only one scale on an instrument will be used during monitoring, the owner or operator need not calibrate the scales that will not be used during that day's monitoring.

(2) A calibration drift assessment shall be performed, at a minimum, at the end of each monitoring day. Check the instrument using the same calibration gas(es) that were used to calibrate the instrument before use. Follow the procedures specified in USEPA Method 21 of appendix A-7 of this part, Section 10.1, except do not adjust the meter readout to correspond to the calibration gas value. Record the instrument reading for each scale used as specified in section G.8(e)(7). Calculate the average algebraic difference between the three meter readings and the most recent calibration value. Divide this algebraic difference by the initial calibration value and multiply by 100 to express the calibration drift as a percentage. If any calibration drift assessment shows a negative drift of more than 10 percent from the initial calibration value, then all equipment monitored since the last calibration with instrument readings below the appropriate leak definition and above the leak definition multiplied by (100 minus the percent of negative drift/divided by 100) must be re-monitored. If any calibration drift assessment shows a positive drift of more than 10 percent from the initial calibration value, then, at the owner/operator's discretion, all equipment since the last calibration with instrument readings above the appropriate leak definition and below the leak definition multiplied by (100 plus the percent of positive drift/divided by 100) may be re-monitored.

(c) The owner or operator shall determine compliance with the no-detectable-emission standards in sections G.5.2(e), G.5.3(i), G.5.4, G.5.7(f), and G.5.10(e) as follows:

(1) The requirements of paragraph (b) shall apply.

(2) USEPA Method 21 of appendix A-7 of this part shall be used to determine the background level. All potential leak interfaces shall be traversed as close to the interface as possible. The arithmetic difference between the maximum concentration indicated by the instrument and the background level is compared with 500 ppm for determining compliance.

(d) The owner or operator shall test each piece of equipment unless he demonstrates that a process unit is not in VOC service, i.e., that the VOC content would never be reasonably

expected to exceed 10 percent by weight. For purposes of this demonstration, the following methods and procedures shall be used:

(1) Procedures that conform to the general methods in ASTM E260-73, 91, or 96, E168-67, 77, or 92, E169-63, 77, or 93 shall be used to determine the percent VOC content in the process fluid that is contained in or contacts a piece of equipment.

(2) Organic compounds that are considered by the permitting authority to have negligible photochemical reactivity may be excluded from the total quantity of organic compounds in determining the VOC content of the process fluid.

(3) Engineering judgment may be used to estimate the VOC content, if a piece of equipment had not been shown previously to be in service. If the permitting authority disagrees with the judgment, paragraphs (d)(1) and (2) of this section shall be used to resolve the disagreement.

(e) The owner or operator shall demonstrate that a piece of equipment is in light liquid service by showing that all the following conditions apply:

(1) The vapor pressure of one or more of the organic components is greater than 0.3 kPa at 20 °C (1.2 in. H_2O at 68 °F). Standard reference texts or ASTM D2879-83, 96, or 97 shall be used to determine the vapor pressures.

(2) The total concentration of the pure organic components having a vapor pressure greater than 0.3 kPa at 20 °C (1.2 in. H_2O at 68 °F) is equal to or greater than 20 percent by weight.

(3) The fluid is a liquid at operating conditions.

(f) Samples used in conjunction with paragraphs (d), (e), and (g) of this section shall be representative of the process fluid that is contained in or contacts the equipment or the gas being combusted in the flare.

(g) The owner or operator shall determine compliance with the standards of flares as follows:

1) USEPA Method 22 of appendix A-7 of this part shall be used to determine visible emissions.

(2) A thermocouple or any other equivalent device shall be used to monitor the presence of a pilot flame in the flare.

(3) The maximum permitted velocity for air assisted flares shall be computed using the following equation:

$$V_{max} = K_1 + K_2 H_T$$

Where:

V_{max} = Maximum permitted velocity, m/sec (ft/sec).

H_T = Net heating value of the gas being combusted, MJ/scm (Btu/scf).

K_1 = 8.706 m/sec (metric units) = 28.56 ft/sec (English units).

K_2 = 0.7084 m4/(MJ-sec) (metric units) = 0.087 ft4/(Btu-sec) (English units).

(4) The net heating value (H_T) of the gas being combusted in a flare shall be computed using the following equation:

$$H_T = K \sum_{i=1}^{n} C_i H_i$$

Where:

K = Conversion constant, 1.740×10^{-7} (g-mole)(MJ)/(ppm-scm-kcal) (metric units) = 4.674×10^{-6} [(g-mole)(Btu)/(ppm-scf-kcal)] (English units).

C_i = Concentration of sample component "i," ppm

H_i = net heat of combustion of sample component "i" at 25°C and 760 mm Hg (77°F and 14.7 psi), kcal/g-mole.

(5) USEPA Method 18 of appendix A-6 of this part or ASTM D6420-99 (2004) (where the target compound(s) are those listed in Section 1.1 of ASTM D6420-99, and the target concentration is between 150 parts per billion by volume and 100 ppmv) and ASTM D2504-67, 77, or 88 (Reapproved 1993) shall be used to determine the concentration of sample component "i."

(6) ASTM D2382-76 or 88 or D4809-95 shall be used to determine the net heat of combustion of component "i" if published values are not available or cannot be calculated.

(7) USEPA Method 2, 2A, 2C, or 2D of appendix A-7 of this part, as appropriate, shall be used to determine the actual exit velocity of a flare. If needed, the unobstructed (free) cross-sectional area of the flare tip shall be used.

(h) The owner or operator shall determine compliance with section G.6.1 or section G.6.2 as follows:

(1) The percent of valves leaking shall be determined using the following equation:

$$\%V_L = (V_L / V_T) * 100$$

Where:

$\%V_L$ = Percent leaking valves.

V_L = Number of valves found leaking.

V_T = The sum of the total number of valves monitored.

(2) The total number of valves monitored shall include difficult-to-monitor and unsafe-to-monitor valves only during the monitoring period in which those valves are monitored.

(3) The number of valves leaking shall include valves for which repair has been delayed.

(4) Any new valve that is not monitored within 30 days of being placed in service shall be included in the number of valves leaking and the total number of valves monitored for the monitoring period in which the valve is placed in service.

(5) If the process unit has been subdivided in accordance with section G.5.7(c)(1)(ii), the sum of valves found leaking during a monitoring period includes all subgroups.

(6) The total number of valves monitored does not include a valve monitored to verify repair.

(i) When each leak is detected as specified in sections G.5.2, G.5.3, G.5.7, G.5.8, G.5.11, and G.6.2, the following requirements apply:

(1) A weatherproof and readily visible identification, marked with the equipment identification number, shall be attached to the leaking equipment.

(2) The identification on a valve may be removed after it has been monitored for 2 successive months as specified in section G.5.7(c) and no leak has been detected during those 2 months.

(3) The identification on a connector may be removed after it has been monitored as specified in section G.9.7(b)(3)(iv) and no leak has been detected during that monitoring.

(4) The identification on equipment, except on a valve or connector, may be removed after it has been repaired.

G.8 Recordkeeping and Reporting Requirements

(a) *Recordkeeping requirements*. Each owner or operator subject to the VOC equipment leak requirements specified in section G shall maintain the records specified in paragraphs (a)(1) through (10), as applicable, onsite or at the nearest local field office for at least five years.

(1) An owner or operator of more than one facility subject to the requirements of section G may comply with the recordkeeping requirements for these facilities in one recordkeeping system if the system identifies each record by each facility.

(2) The owner or operator shall record the information specified in paragraphs (a)(2)(i) through (v) of this section for each monitoring event required by sections G.5.2, G.5.3, G.5.7, G.5.8, G.5.11, and G.6.2.

(i) Monitoring instrument identification.

(ii) Operator identification.

(iii) Equipment identification.

(iv) Date of monitoring.

(v) Instrument reading.

(3) When each leak is detected as specified in sections G.5.2, G.5.3, G.5.7, G.5.8, G.5.11, and G.6.2, the following information shall be recorded in a log and shall be kept for 2 years in a readily accessible location:

(i) The instrument and operator identification numbers and the equipment identification number, except when indications of liquids dripping from a pump are designated as a leak.

(ii) The date the leak was detected and the dates of each attempt to repair the leak.

(iii) Repair methods applied in each attempt to repair the leak.

(iv) Maximum instrument reading measured by USEPA Method 21 of appendix A-7 of this part at the time the leak is successfully repaired or determined to be non-repairable, except when a pump is repaired by eliminating indications of liquids dripping.

(v) “Repair delayed” and the reason for the delay if a leak is not repaired within 15 calendar days after discovery of the leak.

(vi) The signature of the owner or operator (or designate) whose decision it was that repair could not be effected without a process shutdown.

(vii) The expected date of successful repair of the leak if a leak is not repaired within 15 days.

(viii) Dates of process unit shutdowns that occur while the equipment is unrepaired.

(ix) The date of successful repair of the leak.

(4) The following information pertaining to the design requirements for closed vent systems and control devices described in section G.5.10 shall be recorded and kept in a readily accessible location:

(i) Detailed schematics, design specifications, and piping and instrumentation diagrams.

(ii) The dates and descriptions of any changes in the design specifications.

(iii) A description of the parameter or parameters monitored, as required in section G.5.10(e), to ensure that control devices are operated and maintained in conformance with their design and an explanation of why that parameter (or parameters) was selected for the monitoring.

(iv) Periods when the closed vent systems and control devices required in sections G.5.2, G.5.3, G.5.4, and G.5.5 are not operated as designed, including periods when a flare pilot light does not have a flame.

(v) Dates of startups and shutdowns of the closed vent systems and control devices required in sections G.5.2, G.5.3, G.5.4, and G.5.5.

(5) The following information pertaining to all equipment subject to the requirements in sections G.5.1 to G.5.11 shall be recorded in a log that is kept in a readily accessible location:

(i) A list of identification numbers for equipment subject to the requirements of this rule.

(ii)(A) A list of identification numbers for equipment that are designated for no detectable emissions under the provisions of sections G.5.2(e), G.5.3(i), and G.5.7(f).

(B) The designation of equipment as subject to the requirements of sections G.5.2(e), G.5.3(i), or section G.5.7(f) shall be signed by the owner or operator. Alternatively, the owner or operator may establish a mechanism with their permitting authority that satisfies this requirement.

(C) A list of equipment identification numbers for pressure relief devices required to comply with section G.5.4.

(iii)(A) The dates of each compliance test as required in sections G.5.2(e), G.5.3(i), G.5.4, and G.5.7(f).

(B) The background level measured during each compliance test.

(C) The maximum instrument reading measured at the equipment during each compliance test.

(iv) A list of identification numbers for equipment in vacuum service.

(v) A list of identification numbers for equipment that the owner or operator designates as operating in VOC service less than 300 hr/yr in accordance with section G.5.1(e), a description of the conditions under which the equipment is in VOC service, and rationale supporting the designation that it is in VOC service less than 300 hr/yr.

(vi) The date and results of the weekly visual inspection for indications of liquids dripping from pumps in light liquid service.

(vii) Records of the information specified in paragraphs (a)(5)(vii)(A) through (F) of this section for monitoring instrument calibrations conducted according to sections 8.1.2 and 10 of USEPA Method 21 of appendix A-7 of this part and section G.7(b).

(A) Date of calibration and initials of operator performing the calibration.

(B) Calibration gas cylinder identification, certification date, and certified concentration.

(C) Instrument scale(s) used.

(D) A description of any corrective action taken if the meter readout could not be adjusted to correspond to the calibration gas value in accordance with section 10.1 of USEPA Method 21 of appendix A-7 of this part.

(E) Results of each calibration drift assessment required by section G.7(b)(2) (i.e., instrument reading for calibration at end of monitoring day and the calculated percent difference from the initial calibration value).

(F) If an owner or operator makes their own calibration gas, a description of the procedure used.

(viii) The connector monitoring schedule for each process unit as specified in section G.9.7(b)(3)(v).

(ix) Records of each release from a pressure relief device subject to section G.5.4.

(6) The following information pertaining to all valves subject to the requirements of section G.5.7(g) and (h), all pumps subject to the requirements of section G.5.2(g), and all connectors subject to the requirements of section G.5.11(e) shall be recorded in a log that is kept in a readily accessible location:

(i) A list of identification numbers for valves, pumps, and connectors that are designated as unsafe-to-monitor, an explanation for each valve, pump, or connector stating why the valve, pump, or connector is unsafe-to-monitor, and the plan for monitoring each valve, pump, or connector.

(ii) A list of identification numbers for valves that are designated as difficult-to-monitor, an explanation for each valve stating why the valve is difficult-to-monitor, and the schedule for monitoring each valve.

(7) The following information shall be recorded for valves complying with section G.6.2:

(i) A schedule of monitoring.

(ii) The percent of valves found leaking during each monitoring period.

(8) The following information shall be recorded in a log that is kept in a readily accessible location:

(i) Design criterion required in sections G.5.2(d)(5) and G.5.3(e)(2) and explanation of the design criterion; and

(ii) Any changes to this criterion and the reasons for the changes.

(A) The following information shall be recorded in a log that is kept in a readily accessible location for use in determining exemptions:

(*1*) An analysis demonstrating the design capacity of the natural gas processing plant,

(*2*) A statement listing the feed or raw materials and products from the processing plant(s) and an analysis demonstrating whether these chemicals are heavy liquids or beverage alcohol, and

(*3*) An analysis demonstrating that equipment is not in VOC service.

(9) Information and data used to demonstrate that a piece of equipment is not in VOC service shall be recorded in a log that is kept in a readily accessible location.

(10) The following recordkeeping requirements apply to pressure relief devices.

(i) When each leak is detected, a weatherproof and readily visible identification, marked with the equipment identification number, must be attached to the leaking equipment. The identification on the pressure relief device may be removed after it has been repaired.

(ii) When each leak is detected as specified in section G.3(b)(2), the following information must be recorded in a log and shall be kept for 2 years in a readily accessible location:

(A) The instrument and operator identification numbers and the equipment identification number.

(B) The date the leak was detected and the dates of each attempt to repair the leak.

(C) Repair methods applied in each attempt to repair the leak.

(D) "Above 500 ppm" if the maximum instrument reading measured by the methods specified in paragraph (a) of this section after each repair attempt is 500 ppm or greater.

(E) "Repair delayed" and the reason for the delay if a leak is not repaired within 15 calendar days after discovery of the leak.

(F) The signature of the owner or operator (or designate) whose decision it was that repair could not be effected without a process shutdown.

(G) The expected date of successful repair of the leak if a leak is not repaired within 15 days.

(H) Dates of process unit shutdowns that occur while the equipment is unrepaired.

(I) The date of successful repair of the leak.

(J) A list of identification numbers for equipment that are designated for no detectable emissions under the provisions of section G.5.4 (a). The designation of equipment subject to the provisions of section G.5.4 (a) must be signed by the owner or operator.

(b) *Reporting requirements*. Each owner or operator subject to the VOC equipment leak requirements shall comply with the reporting requirements of paragraphs (b)(1) through (5).

(1) Each owner or operator subject to the equipment leak VOC emission control requirements of section G.5 shall submit semiannual reports to the permitting authority beginning 6 months after a facility becomes subject to VOC emission control requirements of section G.

(2) The initial semiannual report to the permitting authority shall include the following information:

(i) Process unit identification.

(ii) Number of valves subject to the requirements of section G.5.7, excluding those valves designated for no detectable emissions under the provisions of section G.5.7(f).

(iii) Number of pumps subject to the requirements of section G.5.2, excluding those pumps designated for no detectable emissions under the provisions of section G.5.2(e) and those pumps complying with section G.5.2(f).

(iv) Number of compressors subject to the requirements of section G.5.3, excluding those compressors designated for no detectable emissions under the provisions of section G.5.3(i) and those compressors complying with section G.5.3(h).

(v) Number of connectors subject to the requirements of section G.9.11.

(vi) Number of pressure relief devices subject to the requirements, except for those pressure relief devices designated for no detectable emissions under the provisions of section G.5.4 (a) and those pressure relief devices complying with section G.5.4 (c).

(3) All semiannual reports to the permitting authority shall include the following information:

(i) Process unit identification.

(ii) For each month during the semiannual reporting period,

(A) Number of valves for which leaks were detected as described in section G.5.7(b) or section G.6.2,

(B) Number of valves for which leaks were not repaired as required in section G.5.7(d)(1),

(C) Number of pumps for which leaks were detected as described in section G.5.2(b), (d)(4)(ii)(A) or (B), or (d)(5)(iii),

(D) Number of pumps for which leaks were not repaired as required in section G.5.2(c)(1) and (d)(6),

(E) Number of compressors for which leaks were detected as described in section G.5.3(f),

(F) Number of compressors for which leaks were not repaired as required in section G.5.3(g)(1),

(G) Number of connectors for which leaks were detected as described in section G.9.7(b)

(H) Number of connectors for which leaks were not repaired as required in section G.9.7(d), and

(I) The facts that explain each delay of repair and, where appropriate, why a process unit shutdown was technically infeasible.

(iii) An owner or operator must include the following information in all semiannual reports:

(A) Number of pressure relief devices for which leaks were detected; and

(B) Number of pressure relief devices for which leaks were not repaired.

(iv) Dates of process unit shutdowns which occurred within the semiannual reporting period.

(v) Revisions to items reported according to paragraph (b)(1) of this section if changes have occurred since the initial report or subsequent revisions to the initial report.

(4) An owner or operator electing to comply with the provisions of section G.6.1 or section G.6.2 shall notify the permitting authority of the alternative standard selected 90 days before implementing either of the provisions.

(5) An owner or operator shall report the results of all performance tests to the permitting authority.

G.9 Definitions

Equipment, as used in the standards and requirements in this rule relative to the equipment leaks of VOC from onshore natural gas processing plants, means each pump, pressure relief device, open-ended valve or line, valve, and flange or other connector that is in VOC service or in wet gas service, and any device or system required by those same standards and requirements in this rule.

Gas processing plant process unit means equipment assembled for the extraction of natural gas liquids from field gas, the fractionation of the liquids into natural gas products, or other operations associated with the processing of natural gas products. A process unit can operate independently if supplied with sufficient feed or raw materials and sufficient storage facilities for the products.

Natural gas processing plant (gas plant) means any processing site engaged in the extraction of natural gas liquids from field gas, fractionation of mixed natural gas liquids to natural gas products, or both. A Joule-Thompson valve, a dew point depression valve, or an isolated or standalone Joule-Thompson skid is not a natural gas processing plant.

Onshore means all facilities except those that are located in the territorial seas or on the outer continental shelf.

H Pneumatic Pumps: VOC Emissions Control Requirements

H.1 Applicability

Each pneumatic pump, which is a natural gas-driven chemical/methanol or natural gas-driven diaphragm pump located at a natural gas processing plant or located from the wellhead and point of custody transfer to the natural gas transmission and storage segment for which a control device is located on site. For purposes of the requirements specified in this section, we refer to these pumps as gas-driven pneumatic pumps.

H.2 What VOC Emission Reduction Requirements Apply to Natural Gas-Driven Pneumatic Pumps?

For each natural gas-driven pneumatic pump, you must comply with the VOC emission control requirements, based on natural gas as a surrogate for VOC, in either paragraph (a)(1) or (b)(1) of this section, as applicable.

(a)(1) Each natural gas-driven pneumatic pump at a natural gas processing plant must have a natural gas emission rate of zero.

(2) Each natural gas-driven pneumatic pump at a natural gas processing plant must be tagged with the date the natural gas-driven pneumatic pump is required to comply with the model rule (as established by the regulatory authority) that allows traceability to the records for that gas-driven pneumatic pump as required in section H.5(a)(1)(i).

(b)(1) Each natural gas-driven pneumatic pump located between the wellhead and point of custody transfer to the natural gas transmission and storage segment, for which a control device is located on site, must reduce natural gas emissions by 95 percent, except as provided in paragraph (b)(2) of this section.

(2) You are not required to install a control device solely for the purposes of complying with the 95 percent reduction of paragraph (b)(1) of this section. If you do not have a control

device installed on site by the compliance date specified by your regulatory authority, then you must comply instead with the provisions of paragraph (b)(2)(i) and (ii) of this section.

(i) Submit a certification in accordance with H.5(b)(1)(i).

(ii) If you subsequently install a control device, you are no longer required to submit the certification in H.5(b)(1)(i) and must be in compliance with the requirements of paragraph (b)(1) of this section within 30 days of installation of the control device. Compliance with this requirement should be reported in the next annual report in accordance with H.5(a)(1)(iii).

(3) Each natural gas-driven pneumatic pump located between the wellhead and point of custody transfer to the natural gas transmission and storage segment for which a control device is located on site must be tagged with the date that the pneumatic pump must comply with the model rule (as established by the regulatory authority) that allows traceability to the records for that natural gas-driven pneumatic pump as required in section H.5(a)(1)(ii).

(4) If you use a control device to reduce emissions, you must connect the natural gas-driven pneumatic pump subject to VOC emission control requirements through a closed vent system that meets the requirements of section D.1(b) and routed to a control device that meets the conditions specified in section E.1. As an alternative to routing the closed vent system to a control device, you may route the closed vent system to a process.

(c) You must demonstrate initial compliance by the compliance date specified by your regulatory authority by demonstrating compliance with standards that apply to natural gas-driven pneumatic pump sources subject to VOC emission requirements as required by section H.3.

(d) You must demonstrate continuous compliance with standards that apply to natural gas-driven pneumatic pump sources subject to VOC emission requirements as required by section H.4.

(e) You must perform the required recordkeeping, and reporting as required by section H.5.

H.3 Initial Compliance Demonstration Requirements

You must demonstrate initial compliance by the compliance date specified by your regulatory authority by demonstrating compliance with the VOC emission control requirements for natural gas-driven pneumatic pumps specified in paragraphs (a) through (f) of this section, as applicable.

(a) You own or operate a pneumatic pump located at a natural gas processing plant and your natural gas-driven chemical/methanol or diaphragm pump is driven by a gas other than natural gas and therefore emits zero natural gas.

(b) You own or operate a natural gas-driven pneumatic pump located between the wellhead and point of custody transfer to the natural gas transmission and storage segment and your natural gas-driven pneumatic pump is controlled by at least 95 percent.

(c) You own or operate a natural gas-driven pneumatic pump located between the wellhead and point of custody transfer to the natural gas transmission and storage segment and your pneumatic pump is not controlled by at least 95 percent because a control device is not available at the site, you must submit the certification in section H.5(a)(1)(i).

(d) You must tag each natural gas-driven pneumatic pump subject to VOC emission requirements according to the requirements of section (a)(2) or (b)(3), as applicable.

(e) You must include a listing of the natural gas-driven pneumatic pumps subject to VOC emission requirements specified in paragraphs (a) through (c) of this section in the initial annual report submitted for your natural gas-driven pneumatic pump according to the requirements of section H.5(b).

(f) You must maintain the records as specified in section H.5(a) for each natural gas-driven chemical/methanol or diaphragm pump subject to VOC emission control requirements of section H.

H.4 Continuous Compliance Demonstration Requirements

You have demonstrated continuous compliance for each natural gas-driven pneumatic pump at a location with a control device on site by complying with the requirements of paragraphs (a) and (b) of this section.

(a) You must reduce VOC emissions from the natural gas-driven pneumatic pump by 95 percent or greater.

(b) For each control device used to reduce emissions, you must demonstrate continuous compliance with the performance requirements of section H.2(a)(1) and (b)(1) using the procedures specified in paragraphs (b)(1) through (7) of this section. If you use a condenser as the control device to achieve the requirements specified in section H.2, you must demonstrate compliance according to paragraph (b)(8) of this section. You may switch between compliance with paragraphs (b)(1) through (7) of this section and compliance with paragraph (b)(8) of this section only after at least 1 year of operation in compliance with the selected approach. You must provide notification of such a change in the compliance method in the next annual report, as required in section H.5(b)(1), following the change.

(1) You must operate below (or above) the site specific maximum (or minimum) parameter value established according to the requirements of section E.2(f)(1).

(2) You must calculate the daily average of the applicable monitored parameter in accordance with section E.2(e) except that the inlet gas flow rate to the control device must not be averaged.

(3) Compliance with the operating parameter limit is achieved when the daily average of the monitoring parameter value calculated under paragraph (b)(2) of this section is either equal to or greater than the minimum monitoring value or equal to or less than the maximum monitoring value established under paragraph (b)(1) of this section. When performance testing of a combustion control device is conducted by the device manufacturer as specified in section F(d), compliance with the operating parameter limit is achieved when the criteria in section F(e) are met.

(4) You must operate the continuous monitoring system required in section E.2(a) at all times the source is operating, except for periods of monitoring system malfunctions, repairs associated with monitoring system malfunctions, and required monitoring system quality assurance or quality control activities (including, as applicable, system accuracy audits and required zero and span adjustments). A monitoring system malfunction is any sudden, infrequent, not reasonably preventable failure of the monitoring system to provide valid data. Monitoring system failures that are caused in part by poor maintenance or careless operation are not malfunctions. You are required to complete monitoring system repairs in response to monitoring system malfunctions and to return the monitoring system to operation as expeditiously as practicable.

(5) You may not use data recorded during monitoring system malfunctions, repairs associated with monitoring system malfunctions, or required monitoring system quality assurance or control activities in calculations used to report emissions or operating levels. You must use all the data collected during all other required data collection periods to assess the operation of the control device and associated control system.

(6) Failure to collect required data is a deviation of the monitoring requirements, except for periods of monitoring system malfunctions, repairs associated with monitoring system malfunctions, and required quality monitoring system quality assurance or quality control activities (including, as applicable, system accuracy audits and required zero and span adjustments).

(7) If you use a combustion control device to meet the requirements of section H.2 and you demonstrate compliance using the test procedures specified in section F(b), you must comply with paragraphs (b)(7)(i) through (iv) of this section.

(i) A pilot flame must be present at all times of operation.

(ii) Devices must be operated with no visible emissions, except for periods not to exceed a total of one minute during any 15 minute period. A visible emissions test using section 11 of Method 22, 40 CFR part 60, appendix A, must be performed at least once every calendar month, separated by at least 15 days between each test. The observation period shall be 15 minutes.

(iii) Devices failing the visible emissions test must follow manufacturer's repair instructions, if available, or best combustion engineering practice as outlined in the unit inspection and maintenance plan, to return the unit to compliant operation. All repairs and maintenance activities for each unit must be recorded in a maintenance and repair log and must be available for inspection.

(iv) Following return to operation from maintenance or repair activity, each device must pass a Method 22, 40 CFR part 60, appendix A, visual observation as described in paragraph (b)(7)(ii) of this section.

(8) If you use a condenser as the control device to achieve the percent reduction performance requirements specified in section H.2(b)(1), you must demonstrate compliance using the procedures in paragraphs (b)(8)(i) through (v) of this section.

(i) You must establish a site-specific condenser performance curve according to section E.2(f)(2).

(ii) You must calculate the daily average condenser outlet temperature in accordance with section E.2(e).

(iii) You must determine the condenser efficiency for the current operating day using the daily average condenser outlet temperature calculated under paragraph (b)(8)(ii) of this section and the condenser performance curve established under paragraph (b)(8)(i) of this section.

(D) Except as provided in paragraphs (b)(8)(iv)(A) and (B) of this section, at the end of each operating day, you must calculate the 365-day rolling average TOC emission reduction, as appropriate, from the condenser efficiencies as determined in paragraph (b)(8)(iii) of this section.

(A) After the compliance dates specified by your regulatory authority, if you have less than 120 days of data for determining average TOC emission reduction, you must calculate the average TOC emission reduction for the first 120 days of operation after the compliance date. You have demonstrated compliance with the overall 95 percent reduction requirement if the 120-day average TOC emission reduction is equal to or greater than 95 percent.

(B) After 120 days and no more than 364 days of operation after the compliance date specified by your regulatory authority, you must calculate the average TOC emission reduction as the TOC emission reduction averaged over the number of days between the current day and the applicable compliance date. You have demonstrated compliance with the overall 95 percent reduction requirement if the average TOC emission reduction is equal to or greater than 95 percent.

(v) If you have data for 365 days or more of operation, you have demonstrated compliance with the TOC emission reduction if the rolling 365-day average TOC emission reduction calculated in paragraph (b)(8)(iv) of this section is equal to or greater than 95 percent.

(3) You must submit the annual report required by section H.5(b)(1) and maintain the records as specified in section H.5(a)(1).

H.5 Recordkeeping and Reporting Requirements

(a) *Recordkeeping requirements*.

(1) For each applicable natural gas-driven pneumatic pump subject to VOC emission control requirements, you must maintain the records identified in paragraphs (a)(1)(i) through (iii) of this section onsite or at the nearest local field office for at least five years.

(i) Records of the date that an individual natural gas-driven pneumatic pump is required to comply with the model rule (as specified by the regulatory authority), location and manufacturer specifications for each natural gas-driven pneumatic pump.

(ii) Records of deviations in cases where the natural gas-driven pneumatic pump was not operated in compliance with the requirements specified in section H.2.

(iii) Records of the control device installation date and the location of sites containing natural gas-driven pneumatic pumps at which a control device was installed, where previously there was no control device at the site.

(iv) Except as specified in paragraph (a)(iv)(G) of this section, records of each control device tested under section F(d) which meets the criteria in section F(d)(11) and section F(e) and used to comply with section H.2(b)(1) for each natural gas-driven pneumatic pump.

(A) Make, model and serial number of purchased device.

(B) Date of purchase.

(C) Copy of purchase order.

(D) Location of the pneumatic pump and control device in latitude and longitude coordinates in decimal degrees to an accuracy and precision of five (5) decimals of a degree using the North American Datum of 1983.

(E) Inlet gas flow rate.

(F) Records of continuous compliance requirements in F€ as specified in paragraphs (a)(1)(iv)(F)(*1*) through (*4*) of this section.

(*1*) Records that the pilot flame is present at all times of operation.

(*2*) Records that the device was operated with no visible emissions except for periods not to exceed a total of 2 minutes during any hour.

(*3*) Records of the maintenance and repair log.

(*4*) Records of the visible emissions test following return to operation from a maintenance or repair activity.

(G) As an alternative to the requirements of paragraph (a)(1)(iv)(D) of this part, you may maintain records of one or more digital photographs with the date the photograph was taken and the latitude and longitude of the pneumatic pump and control device imbedded within or stored with the digital file. As an alternative to imbedded latitude and longitude within the digital photograph, the digital photograph may consist of a photograph of the pneumatic pump and control device with a photograph of a separately operating GIS device within the same digital picture, provided the latitude and longitude output of the GIS unit can be clearly read in the digital photograph.

(b) *Reporting Requirements*.

(1) For each natural gas-driven pneumatic pump subject to VOC emission control requirements, annual reports are required to include the information specified in paragraphs (b)(1)(i) through (iv) of this section.

(i) In the initial annual report, a certification that there is no control device on site, if applicable.

(ii) An identification of each natural gas-driven pneumatic pump, including the identification information specified in section H.2(a)(2) or (b)(3).

(iii) An identification of any sites which contain natural gas-driven pneumatic pumps and which installed a control device during the reporting period, where there was no control device previously at the site.

(iv) Records of deviations specified in paragraph (a)(1)(ii) of this section that occurred during the reporting period.

(v) If complying with H.2(b)(1) with a control device tested under section F(d), which meets the criteria in section F(d)(11) and section F(e), records specified in paragraphs (a)(1)(iv)(A) through (G) of this section for each pneumatic pump constructed, modified or reconstructed during the reporting period.

H.6 Definitions

Chemical/methanol or diaphragm pump means a gas-driven positive displacement pump typically used to inject precise amounts of chemicals into process streams or circulate glycol compounds for freeze protection.

Natural gas processing plant (gas plant) means any processing site engaged in the extraction of natural gas liquids from field gas, fractionation of mixed natural gas liquids to natural gas products, or both. A Joule-Thompson valve, a dew depression valve, or a standalone Joule-Thompson skid is not a natural gas processing plant.

Natural gas-driven chemical/methanol or diaphragm pump means a chemical or methanol injection or circulation pump or a diaphragm pump powered by pressurized natural gas.

I Fugitive Emissions Components VOC Emissions Control Requirements

I.1 Applicability

(a) The collection of fugitive emission components at a well site with wells that produce, on average, greater than 15 barrel equivalents per day. The fugitive emissions requirements of this section do not apply to well sites that only contain wellheads.

(b) The collection of fugitive emission components at a compressor station located from the wellhead to the point of custody transfer to the natural gas transmission and storage segment or to an oil pipeline.

I.2 What VOC Emission Control Requirements Apply to the Collection of Fugitive Emission Components at a Well Site and a Compressor Station?

For fugitive emissions, VOC emission control requirements apply to the collection of fugitive emission components at a well site and compressor station (that is located from the wellhead to the point of custody transfer to the natural gas transmission and storage segment or to an oil pipeline), as specified in paragraphs (a) through (e) of this section for monitoring the collection of fugitive emission components. These requirements are independent of the closed vent system and control requirements in section D.

(a) You must monitor all fugitive emission components, as defined in section I.6, in accordance with paragraphs (b) through (d). You must repair all sources of fugitive emissions in accordance with paragraph (e). You must keep records in accordance and report in accordance with section I.5(a). For purposes of this section, fugitive emissions are defined as: any visible emission from a fugitive emission component using optical gas imaging.

(b) You must develop corporate-wide fugitive emissions monitoring plan that covers the collection of fugitive emission components at well sites and compressor stations in accordance with paragraph (c) of this section, and you must develop a site-specific fugitive emissions monitoring plan specific to each collection of fugitive emission components at a well site and

each collection of fugitive emission components at a compressor station in accordance with paragraph (d) of this section. Alternatively, you may develop a site-specific plan for each collection of fugitive emission components at a well site and each collection of fugitive emission components at a compressor station that covers the elements of both the corporate-wide and site-specific plans.

(c) Your corporate-wide monitoring plan must include the elements specified in paragraphs (c)(1) through (c)(8) of this section, as a minimum.

(1) Frequency for conducting surveys. Monitoring surveys must be conducted at least as frequently as required by sections I.3 and section I.4 of this section.

(2) Technique for determining fugitive emissions.

(3) Manufacturer and model number of fugitive emission detection equipment to be used.

(4) Procedures and timeframes for identifying and fixing fugitive emission components from which fugitives are detected, including timeframes for fugitive emission components that are unsafe to repair. Your repair schedule must meet the requirements of paragraph (e) of this section at a minimum.

(5) Procedures and timeframes for verifying fugitive emission component repairs.

(6) Records that will be kept and the length of time records will be kept.

(7) Your plan must also include the elements specified in paragraphs (c)(7)(i) through (vii).

(i) Verification that your optical gas imaging equipment meets the specifications of paragraphs (c)(7)(i)(A) and (B) of this section. This verification is an initial verification and may either be performed by the facility, by the manufacturer, or by a third party. For purposes of complying with the fugitive emissions monitoring program with optical gas imaging, a fugitive emission is defined as any visible emissions observed using optical gas imaging.

(A) Your optical gas imaging equipment must be capable of imaging gases in the spectral range for the compound of highest concentration in the potential fugitive emissions.

(B) Your optical gas imaging equipment must be capable of imaging a gas that is half methane, half propane at a concentration of ≤10,000 ppm at a flow rate of ≥60 g/hr from a quarter inch diameter orifice.

(ii) Procedure for a daily verification check.

(iii) Procedure for determining the operator's maximum viewing distance from the equipment and how the operator will ensure that this distance is maintained.

(iv) Procedure for determining maximum wind speed during which monitoring can be performed and how the operator will ensure monitoring occurs only at wind speeds below this threshold.

(v) Procedures for conducting surveys, including the items specified in paragraphs (c)(7)(v)(A) through (C) of this section.

(A) How the operator will ensure an adequate thermal background is present in order to view potential fugitive emissions.

(B) How the operator will deal with adverse monitoring conditions, such as wind.

(C) How the operator will deal with interferences (e.g., steam).

(vi) Training and experience needed prior to performing surveys.

(vii) Procedures for calibration and maintenance. Procedures must comply with those recommended by the manufacturer.

(d) Your site-specific monitoring plan must include the elements specified in paragraphs (d)(1) through (d)(3) of this section, as a minimum.

(1) Deviations from your corporate-wide plan.

(2) Sitemap.

(3) Your plan must also include your defined walking path. The walking path must ensure that all fugitive emissions components are within sight of the path and must account for interferences.

(e) Each monitoring survey shall observe each fugitive emissions components for fugitive emissions.

(f) For fugitive emissions components also subject to the repair provisions of sections D.2(e)(9) through (12) and (f)(4) through (7), those provisions apply instead to those closed vent system and covers, and the repair provisions of paragraphs (f)(1) and (2) of this section do not apply to those closed vent systems and covers.

(1) Each identified source is required to monitor fugitive emission components as specified in section I.3 and I.4. Identified fugitive emissions shall be repaired or replaced as soon as practicable, but no later than 15 calendar days after detection of the fugitive emissions. If the repair or replacement is technically infeasible or unsafe to repair during operation of the unit, the repair or replacement must be completed during the next scheduled shutdown or within 6 months, whichever is earlier.

(2) Each repaired or replaced fugitive emissions component must be resurveyed as soon as practical, but no later than 15 days after completion of the repair or replacement, to ensure that there is no leak.

(i) For repairs that cannot be made during the monitoring survey when the fugitive emissions are initially found, the operator may resurvey the repaired fugitive emissions components using Method 21 or optical gas imaging no later than 15 days of finding such fugitive emissions.

(ii) Operators that use Method 21 to resurvey the repaired fugitive emissions components, are subject to the resurvey provisions specified in paragraphs (e)(2)(ii)(A) and (B).

(A) A fugitive emissions component is repaired when the Method 21 instrument indicates a concentration of less than 500 ppm above background.

(B) Operators must use the Method 21 monitoring requirements specified in section G.3(g).

(iii) Operators that use optical gas imaging to resurvey the repaired fugitive emissions components, are subject to the resurvey provisions specified in paragraphs (e)(2)(iii)(A) and (B).

(A) A fugitive emissions component is repaired when the optical gas imaging instrument shows no indication of visible emissions.

(B) Operators must use the optical gas imaging monitoring requirements specified in paragraph (a) of this section.

I.3 Initial Compliance Demonstration

(a) Each well site with a collection of fugitive emissions components must conduct an initial monitoring survey within 30 days of being subject to VOC emission control requirements of section I.

(b) Each compressor station site with a collection of fugitive emissions components must conduct an initial monitoring survey within 30 days of being subject to VOC emission control requirements of section I.2.

I.4 Continuous Compliance Demonstration

(a) A monitoring survey of each collection of fugitive emissions components at a well site and a compressor station site subject to VOC emission control requirements under section I shall be conducted at least semiannually after the initial survey. Consecutive semiannual monitoring surveys shall be conducted at least four months apart.

(b) The monitoring frequency specified in paragraph (a) of this section shall be increased to quarterly in the event that two consecutive semiannual monitoring surveys detect fugitive

emissions at greater than three percent of the fugitive emissions components at a well site or at greater than three percent of the fugitive emission components at a compressor station subject to VOC emission control requirements under section I.

(c) The monitoring frequency specified in paragraph (a) of this section may be decreased to annual in the event that two consecutive semiannual surveys detect no fugitive emissions at less than one percent of the fugitive emissions components at the well site, or less than one percent of the fugitive emissions components at a compressor station subject to VOC emission control requirements under section I. The monitoring frequency shall return to semiannual if a annual survey detects fugitive emissions between one and three percent of the fugitive emissions components at the well site, or between one and three percent of the fugitive emissions components at the compressor station, and shall return to quarterly if a survey detects fugitive emissions at greater than three percent of the fugitive emissions components at the well site, or greater than three percent of the fugitive emissions components at the compressor station.

I.5 Recordkeeping and Reporting Requirements

(a) Records for each monitoring survey shall be maintained as specified in paragraphs (a)(1) through (6) and must contain, at a minimum, the information specified in paragraphs (a)(1) through (a)(6). Records are required to be maintained onsite or at the nearest local field office for at least five years.

(1) Date of the survey.

(2) Beginning and end time of the survey.

(3) Name of operator(s) performing survey. You must note the training and experience of the operator.

(4) Ambient temperature, sky conditions, and maximum wind speed at the time of the survey.

(5) Any deviations from the monitoring plan or a statement that there were no deviations from the monitoring plan.

(6) Documentation of each source of fugitive emissions (e.g. fugitive emissions component), including the information specified in paragraphs (a)(6)(i) through (iv) of this section.

(i) Location.

(ii) One or more digital photographs of each required monitoring survey being performed. The digital photograph must include the date the photograph was taken and the latitude and longitude of the well site or compressor station subject to VOC emission control requirements under section I imbedded within or stored with the digital file. As an alternative to imbedded latitude and longitude within the digital photograph, the digital photograph may consist of a photograph of the monitoring survey being performed with a photograph of a separately operating GIS device within the same digital picture, provided the latitude and longitude output of the GIS unit can be clearly read in the digital photograph.

(iii) The date of the successful repair of the fugitive emission component.

(iv) The instrument used to resurvey a repaired fugitive emissions component that could not be repaired during the initial fugitive emissions finding.

(b) Annual reports shall be submitted for each collection of fugitive emissions components at a well site and each collection of fugitive emissions components at a compressor station subject to VOC emission control requirements under section I that include the information specified in paragraph (a) of this section for each monitoring survey conducted during the year. Multiple collection of fugitive emissions components at a well site or collection of fugitive emissions as a compressor station subject to VOC emission control requirements under section I may be included in a single annual report.

I.6 Definitions

Compressor station site means any permanent combination of one or more compressors that move natural gas at increased pressure into gathering or transmission pipelines, or into storage.

Fugitive emissions component means any component that has the potential to emit fugitive emissions of VOC at a well site or compressor station, , including but not limited to valves, connectors, pressure relief devices, open-ended lines, access doors, flanges, closed vent systems, thief hatches or other openings on a storage vessels, agitator seals, distance pieces, crankcase vents, blowdown vents, pump seals or diaphragms, compressors, separators, pressure vessels, dehydrators, heaters, instruments, and meters. Devices that vent as part of normal operations, such as natural gas-driven pneumatic controllers or natural gas-driven pumps, are not fugitive emissions components, insofar as the gas discharged from the device's vent is not considered a fugitive emission. Emissions originating from other than the vent, such as the seals around the bellows of a diaphragm pump, would be considered fugitive emissions.

Well site means one or more areas that are directly disturbed during the drilling and subsequent operation of, or affected by, production facilities directly associated with any oil well, natural gas well, or injection well and its associated well site. For the purposes of the fugitive emissions standards at section I.1, well site also includes tank batteries collecting crude oil, condensate, intermediate hydrocarbon liquids, or produced water condensate from wells not located at the well site (e.g., centralized tank batteries). For the purposes of the fugitive emission requirements, a well site that only contains one or more wellheads is not subject to these requirements.

United States Environmental Protection Agency	Office of Air Quality Planning and Standards Sector Policies and Programs Division Research Triangle Park, NC	Publication No. EPA-453/P-51-001 August, 2015