# Power Supply and Load Reduction Technology Options For Audio Equipment Manufacturers To Meet the ENERGY STAR® Specification

## An Overview

Prepared by
The Cadmus Group, Inc.

Stephen D. Bristow
Consultant

for the
ENERGY STAR® Program
Atmospheric Pollution Prevention Division
U. S. Environmental Protection Agency
Washington, D.C.

Contract No. 68-W6-0050; Work Assignment No. 0008AA-25
Revised Deliverable: December 15, 1998

# CONTENTS

Executive Summary 1
Introduction 5
Report Organization 5
Costing 6
Load Reduction 8

Section One
Options for Products With Standby Functions 10

1. High Side Switcher 10
2. Low Voltage Switcher 11
3. Improved Transformer 12
4. Capacitive Auxiliary Supply 14
5. AC/DC Auxiliary Supply 16
6. Pulse Charged Battery 17

Section Two
Options for Products With No Standby Functions 18

7. Internally Mounted 110V Switch on the Audio Device 19
8. Externally Mounted Designs 20
   a. Power Switch on Wall Adapter
   b. Relay Switched Adapter
   c. Capacitive Powered Switched Adapter

Conclusions 22

Appendix A: Tables
A1. Cost To Meet EPA's 2-Watt and 1-Watt Specification
A2. Characteristics of the Power Delivery System
A3. Cost Summary Table for Load Reduction Technologies
A4. Product Categories
A5. Power Supply Technology Applications

Appendix B: Decision Trees
Appendix C: Manufacturing Bill of Materials for Selected Technologies
Appendix D: Bibliography

# EXECUTIVE SUMMARY

The U.S. Environmental Protection Agency (EPA) has proposed a two-tier specification for the ENERGY STAR® Audio and Digital Versatile Disc (DVD) Program.[1] Between now and January 1, 2003, the proposed standby power limit is 2 watts. After January 1, 2003, the proposed standby power limit is 1 watt. This report presents eight designs for power delivery systems that meet the specification.

## Options for Fully Featured Products with Standby Functions

- Starting with the next manufacturing cycle in early 1999, manufacturers can produce many fully featured audio product lines with standby functions that meet the EPA 2-watt standby power limit without loss of product performance and at estimated incremental costs ranging from minus (-) $2.00 to less than $0.50 per product unit.
- Given the pace of innovation and market trends, manufacturers will likely be able to produce—before the year 2003—all mass-market, fully featured audio product lines with standby functions that meet the EPA 1-watt specification without loss of product performance at no incremental cost per product unit.

In terms of design sophistication and cost, each product line includes a range of low-end to high-end audio devices. This report presents cost ranges because the manufacturer's cost depends on many design factors, including the audio device's operational load, whether the product has an internal or external power supply, the origin of parts, and volume pricing—to name a few.

Within the context of a product's overall power requirements, a variety of technologies can be used to meet the specification, depending on the energy needs of the product's standby functions. Fully featured products—those with functions such as remote control, user-setting memory, and clock displays—require up to 500 mW of useful power using current technology to supply these standby demands. Table ES-1 presents the three most promising technologies available today. The table emphasizes the estimated savings or low added cost for an efficient design relative to the cost of an existing linear power supply for products in the 5- to 10-watt range.

[1] The EPA Audio/DVD Memorandum of Understanding (MOU) identifies 14 product lines: cassette decks, CD players/changers, clock radios, DVD products, equalizers, laserdisc players, mini- and midi-systems, minidisc players, powered speakers, rack systems, stereo amplifiers/pre-amplifiers, stereo receivers, table radios, and tuners.

The most promising design is the high side switcher, which has been cost competitive since 1997. Today's high side switchers can replace leaking power supplies at a cost savings, particularly for many devices with loads of 4 to 10 watts or more. This covers most mass-market audio products. The high side switcher can save manufacturers $0.95 to $2.03 per product unit.

**Table ES-1: Estimated Added Cost of the Three Most Promising Designs for Fully Featured Products with Standby Functions**

| Design Option | Added Cost (Savings) |
|---|---|
| | per unit |
| High side switcher | ($0.95) to ($2.03) |
| Low voltage switcher | $0.00 to $1.00 |
| Improved transformer | $0.25 to $1.50 |

Note: Estimates are based on 5-watt and 10-watt power loads. Actual costs and savings will vary depending on the device, its operational load, volume pricing, and design choices. Estimates are good for the next manufacturing cycle.

Audio products with very high outputs, such as amplifiers, rack systems, and mini-/midi-systems that consume more than 10 watts when active, may have transformer losses which preclude them from the specification. For these devices, it may be more cost effective to disconnect the main power supply and serve the standby functions using a capacitive auxiliary supply, an AC/DC auxiliary supply, or a pulse charged battery. These products may require small investments to meet the specification. To the consumer purchasing one of these high-output devices, this means a zero net cost increase in products priced under $175.00 and up to a $5.00 net cost increase in products priced over $175.00. As a result of energy savings and simpler manufacturing designs, however, the improvements proposed in this report would generate net life-cycle cost savings.

## Load Reduction in Fully Featured Products with Standby Functions

Manufacturers should not disregard load reduction opportunities. Slight changes in design choices can greatly reduce their products' energy needs while in standby mode. As illustrated in Table ES-2, three currently available cost-effective load reduction technologies are presented in this report: replacing vacuum fluorescent displays (VFDs) with liquid crystal displays (LCDs), using a photosensor for daylight harvesting, and cycling the remote control receiver. Reducing the standby load saves energy and allows manufacturers to select less expensive power supplies.

**Table ES-2: Estimated Added Cost of the Three Most Promising Load Reduction Techniques for Fully Featured Products with Standby Functions**

| Load Reduction Design Option | Added Cost (Savings) |
|---|---|
| | per unit |
| VFD to LCD | ($0.10) to ($2.00) |
| Daylight harvesting | $0.08 to $0.10 |
| Cycling remote control receiver | $0.05 to $0.10 |

Note: Actual costs and savings will vary depending on the device, its operational load, volume pricing, and design choices. Estimates are good for the next manufacturing cycle.

## Options for Products with No Standby Functions

Most of the audio products at the lowest end of the market have no standby functions. Therefore, these products have no energy needs when powered down. Even without the need for standby current, these devices consume energy because their linear power supplies leak electricity. To overcome this, the options are to improve the transformer or to disconnect it on the high-voltage side (primary side).

All three suggested design options for products with standby functions—the high side switcher, the low voltage switcher, and the improved transformer—improve the power supply system. They work equally well on products without standby functions because their no-load losses are minimal (in the milliwatt range).

For products with no standby functions, an On/Off 110V power switch on the product or on the wall adapter eliminates energy losses at approximately zero incremental cost.

In order of cost-effectiveness, Table ES-3 presents five design choices that improve the energy efficiency of devices with no standby functions in order to meet the EPA specification. Three of the five are improved power supplies (i.e., high side switcher, low voltage switcher, and improved transformer). The other two (i.e., 110V switch on audio device and power switch on wall adapter) meet the specification by disconnecting the power supply on the primary side.

**Table ES-3: Estimated Added Cost of the Five Most Promising Designs for Products with No Standby Functions**

| Type of Design | Added Cost (Savings) |
|---|---|
| | per unit |
| High side switcher | ($0.95) to ($2.03) |
| 110V switch on audio device | $0.00 to $0.25 |
| Power switch on wall adapter | $0.00 to $0.25 |
| Low voltage switcher | $0.00 to $1.00 |
| Improved transformer | $0.25 to $1.50 |

Note: Estimates are based on 5-watt and 10-watt power loads. Actual costs and savings will vary depending on the device, its operational load, volume pricing, and design choices. Estimates are good for the next manufacturing cycle.

## The Next Step

Current technology allows proactive manufacturers to go beyond the EPA specification. Improved low-power delivery systems, such as the high side switcher and the low voltage switcher, make possible entirely new product lines of energy-efficient devices. These delivery systems, used in conjunction with load reduction techniques and conscientious engineering choices, create opportunities to manufacture "permanently on" products that have negligible power needs when powered down.

Other ENERGY STAR® products, such as computers and copiers, already have this power-down capability after performing their main functions. At this time, no engineering or cost barriers prevent manufacturers from designing audio devices that power themselves down after delivering services and then consume less than 1 or 2 watts.

# INTRODUCTION

This report builds on concepts and topics discussed in an earlier report titled *Technical Review of the ENERGY STAR® Consumer Audio MOU and Testing Guidelines.* That report concluded that it is possible to operate standby functions, such as the timer, remote control, user-setting memory, and continuously active clock/information displays, for less than 1 watt. More recently, EPA has proposed a two-tier specification for the ENERGY STAR® Audio and DVD Program. Between now and January 1, 2003, the proposed standby power limit is 2 watts. After January 1, 2003, the proposed standby power limit is 1 watt.

# REPORT ORGANIZATION

This report presents eight designs to help audio products meet the EPA specification. These designs are grouped in two sections, depending on whether the products have standby functions.

- Section One focuses on products with standby functions. The six designs deliver 250–500 mW of useful standby power to the audio device. Three of the six designs are improvements to the main power supply, and three are auxiliary power supplies.
- Section Two focuses on products with no standby functions. It includes improved transformers, but emphasizes techniques that eliminate electricity leakage by completely switching off the power supply when the product is not in use.

Because manufacturers are faced with a series of complex design choices, Figures 1–3 in Appendix B offer decision trees for identifying the most appropriate redesign path to ensure that a product line meets the EPA specification. Figure 1 helps manufacturers identify standby power needs, and Figure 2 helps them decide how to meet the specification when the product has standby functions. Figure 3 helps manufacturers identify power supply configurations and options when the product has no standby functions.

Data collected to support the conclusions in this report appear in five tables in Appendix A:

- Table A-1 summarizes the cost ranges for all eight designs.
- Table A-2 characterizes the capabilities and replicability of each design option.
- Table A-3 includes cost ranges for practical load reduction technologies.
- Table A-4 aggregates products according to product characteristics and price ranges.

- Table A-5 lists the 14 product lines in the EPA MOU and the six technologies capable of supplying energy to the products' standby functions. Typical power ranges are specified for the product lines and for the technology options in an effort to answer the question: "Can manufacturers make their product lines meet the ENERGY STAR specification by using the energy-efficient technologies described in this report?"

# COSTING

## Methodology

Although power supply manufacturers can provide list prices for specific adapter-load combinations, real prices vary depending on volume, time of purchase, terms of purchase, inventories, and other issues. There are no unique prices in the industry for a particular adapter design or load. Another complication is that the cost curves for each design are not linear. This makes precise one-to-one comparisons across technologies impossible. Nonetheless, because competition is very tight and margins are low in the linear power market, it is possible to establish a "baseline" cost for a given power output, for a given technology.

Using catalog prices and specific price quotes obtained from certain manufacturers, a bill of materials (BOM) was created for a regulated 5-watt DC linear power supply. Comparable BOMs for a high side switcher, a low side switcher, and an improved transformer were also created (see Appendix C).

## Baseline Technology – Existing Design

To provide a relevant comparison, the technology options described in Sections One and Two are compared to the "business-as-usual" or baseline existing design. Because most products are currently powered by a regulated DC adapter, a brief explanation of this power supply and related costs follows.

Wall-mounted power adapters have traditionally been specified so that cost and output power are the primary considerations. Until recently, efficiency has not been a factor in adapter selection. While ideal transformers are loss-free devices, real-world devices have losses due to leakage inductance and resistance within the transformer. The energy loss is equal to $L_{leakage} \times I^2$, where $L_{leakage}$ is the inductance of the primary measured when the secondary of the transformer is shorted and I is the current. Leakage inductance can be reduced by using more and thinner laminations in fabricating the transformer core. Resistance can be reduced by using a lower gauge of wire, which means the transformer becomes larger. The cost of the improvements depends on the amount and thickness of the laminations, the gauge of wire selected, and the power of the

adapter.

Depending on the power output, a high-volume, regulated DC adapter costs between $2.00 for a very low power supply and $10.00 for a supply capable of powering large audio devices. For purposes of this report, a 5-watt regulated DC adapter costing $3.61 is used as the baseline for comparison. The complete BOM appears in Appendix C.

**Table 1: Regulated DC Adapter**

| | 2 W Estimate | 5 W Estimate | 10 W Estimate |
|---|---|---|---|
| **Total** $5.25 | | $2.02 | $3.61 |

Note: Price estimates depend on the device, its operational load, volume pricing, and design choices. Estimates are good for the next manufacturing cycle. Actual costs and savings will vary.

Cost ranges in this report are estimates based on past experience with volume purchases, typical prices in the consumer electronics industry (found in catalogs), and specific price quotes obtained from certain manufacturers. A sample BOM for a 2-watt, 5-watt, and 10-watt power supply is included in Appendix C, along with sample BOMs for selected energy-efficient technologies recommended in this report.

## High-Output Systems

Audio products with very high outputs, such as amplifiers, rack systems, and mini-/midi-systems that consume more than 10 watts when active, may have transformer losses which preclude them from the specification. For these devices, it may be more cost effective to disconnect the main power supply and serve the standby functions using a capacitive auxiliary supply, an AC/DC auxiliary supply, or a pulse charged battery. These products may require small investments to meet the specification. To the consumer purchasing one of these high-output devices, this means a zero net cost increase in products priced under $175.00 and up to a $5.00 net cost increase in products priced over $175.00. As a result of energy savings and simpler manufacturing designs, however, the improvements proposed in this report would generate net life-cycle cost savings.

# LOAD REDUCTION

Slight changes in the operation of an audio device can greatly reduce its energy needs while in standby mode. Appropriate standby load management is key to meeting the ENERGY STAR specification, particularly the 1-watt specification. By incorporating low-power components and energy-efficient technologies, manufacturers can reduce their energy needs, allowing for appropriate sizing and selection of the power supply.

These low-power components and energy-efficient technologies include using more efficient displays; replacing dynamic random access memory (DRAM) with static random access memory (SRAM) or FLASH memory; and modifying the operation of the remote control. Below are three cost-effective ways to adjust the performance and features of the audio device while not detracting from the operation of the product. The changes would be relatively imperceptible to the user. Modifying the operation causes a reduction in the standby current drawn by the audio equipment. The reduction saves money—some components are cheaper and the power supply can be smaller—and also allows manufacturers to use an added standby power supply that is more efficient than the main supply. No exotic technologies are needed to make these internal modifications.

## VFD to LCD Display Replacement

Some audio products use liquid crystal displays (LCDs) while others use Vacuum Fluorescent Displays (VFDs). Whether it is front lit or back lit, the LCD delivers a display that is readable night or day. Compared with VFD, the LCD consumes a fraction of the power. A designer can illuminate the LCD by means of a fluorescent tube or LED illuminators. The total power draw of a 4 LED illuminator is a fraction of the power draw of a fluorescent tube. By combining an LCD with an LED illuminator, manufacturers can cut the power drain of comparable illuminated displays (such as those found in clock radios) from 2– 4 watts to under 350 mW. In this case, the LCD costs the same as the VFD it replaces. LCD technology is very cost effective. On large displays, manufacturers can save up to $2.00 per unit by making this change.

## Daylight Harvesting

Another way to cut power is by adding a photosensing capability to the display illumination circuit. This allows the display illumination to be turned off when the room light levels are sufficient to read the display. Daylight harvesting is a well-known technique used to save energy in buildings and to turn on street lights at night. The photosensor, priced at about $0.10, would cut the power draw needed for illumination by up to 50 percent.

## Cycling Remote Control Receiver

Reducing the amount of power consumed by the remote control receiver can be achieved by powering it on only for a fraction of the time that the unit is in standby. If the receiver is on only 20 percent of the time, the power draw can be cut fivefold. With this technique, it takes a couple of seconds for the unit to turn on when the user presses the remote. The hand-held remote sends a longer ON command to ensure that the signal is received by the infrared (IR) receiver. The extra ON command time for the IR receiver can easily be accommodated by having the transmitter in the IR remote reprogrammed during manufacture. The added materials cost of implementing this functional change—the transistor power switch for the IR receiver—would be approximately $0.10.

In the final analysis, each design serves a specific range of audio products and loads, and has its own set of constraints. This overview is meant to be a guide to selected design alternatives and their relative virtues with regard to meeting the EPA specification. This is not a comprehensive review of all technological choices available.

# SECTION ONE: OPTIONS FOR PRODUCTS WITH STANDBY FUNCTIONS

This section covers six technologies capable of providing energy for standby functions. The designs described herein are applicable to power supplies that are either internal to the audio product or mounted in an external adapter case. The first three—the high side switcher, low voltage switcher, and improved transformer—improve the power supply system. The last three—the capacitive auxiliary supply, AC/DC auxiliary supply, and pulse charged battery—disconnect the main power supply and provide the energy for the standby functions via an auxiliary mechanism.

## 1. High Side Switcher

High side switchers operate directly off the high voltage rectified power line. These devices must withstand more than 150 volts versus the typical 10-volt range of a low side switcher. The major advantage of the new high side switcher integrated circuits (ICs) is that by operating at a much higher switching frequency than the standard 60 Hz line frequency, they allow the use of a much smaller, lighter, more efficient, and cheaper transformer. High side switchers have been competing in the high-load (greater than 20 watts) market for some time. In 1997, high side switchers started competing favorably in the under 5-watt range.

High side switchers deliver power without the inherent transformer losses of linear power supplies. Today's highly efficient chips deliver up to 10 watts of power, but in standby mode consume minimal energy (in the milliwatt range). These new generation chips only operate when power is needed, and they can operate at much lower loads. Manufacturers of this technology are working to extend it beyond the current 10-watt limit.

The new generation chips being introduced have fewer parts and thus a lower cost. They are capable of replacing standard regulated DC power supplies, at a cost savings, as illustrated in Table 2. A complete BOM appears in Appendix C.

| Table 2: High Side Switcher | | |
|---|---|---|
| | 5 W Estimate | 10 W Estimate |
| 1 High Side Switcher | $2.66 | $3.26 |
| 1 Regulated DC Adapter | $3.61 | $5.29 |
| **Net Cost (Savings)** | ( $0.95) | ( $2.03) |

Note: Estimates depend on the device, its operational load, volume pricing, and design choices. Estimates are good for the next manufacturing cycle. Actual costs and savings will vary.

Using discrete linear power supplies that are incorporated into or work with a wall-mounted transformer adapter, the above pricing shows that a switching power supply costs less than the power supply it replaces. Most of the product lines included in EPA's Memorandum of Understanding (MOU) work at power ranges under 10 watts (see Table A-3); therefore, manufacturers can select the technology appropriate for each model or product line. High side switchers can serve products with no standby functions equally well.

This technology is being used extensively in the computer industry, and there are no limitations to its adoption in other fields. Because the high side switcher already competes in price and performance with other power supply options, using it means that manufacturers can meet the ENERGY STAR specification in the EPA MOU for selected product lines and models.

## 2. Low Voltage Switcher

Switching power supplies are generally rated at their full load. The design requires a minimum current to maintain regulation at low load. In the case of a product that has a significant power requirement, this minimum load can be fairly substantial. In older generation products still in the market, this might be at least 1 amp in the case of a 20-amp supply. With these older designs, the standby current energy loss is too large to be ignored.

The traditional technique varies the amount of time the switch in a switching power supply is turned on. This changes the amount of energy that is stored in an inductor and changes the amount of power that is then delivered to the load. Because of tradeoffs between the timing and the size of the energy storage inductor, there are limits on how low the standby current can go while still being able to supply the maximum specified load.

Newer generation switching power supplies can better address this design issue. The main technique adds an extra element to the variable duty cycle that many switching power supplies use to adjust for load. Some switching power supply ICs take the next step and adjust to a low load by interrupting the switching action until power is needed. That is, they do not switch at a constant frequency, but switch only when power is needed. These designs can accommodate a much wider range of loads and are more likely to be able to supply a high current at full rating while maintaining the ability to provide minimum load currents for operation at low load or no current at all.

To help meet the specification, a manufacturer can evaluate the design of its switching power supplies and change to a switching regulator IC that is selected based on its ability to work with little or no load current. If this option is followed, cost impact should be negligible. The replacement price of these more capable ICs is equal to or just marginally more than the less sophisticated chips that they replace. For comparison purposes, a high estimate of $1.00 net cost increase was used.

**Table 3: Low Voltage Switcher**

| | Low Estimate | High Estimate |
|---|---|---|
| 1 Low Voltage Switcher | $3.61 | $6.29 |
| 1 Regulated DC Adapter | $3.61 | $5.29 |
| **Net Cost Increase** | **$0.00** | **$1.00** |

Note: Estimates depend on the device, its operational load, volume pricing, and design choices. Estimates are good for the next manufacturing cycle. Actual costs and savings will vary.

Like high side switchers, low voltage switchers already compete in price and performance with other power supply options. Using low voltage switchers means that manufacturers can meet the ENERGY STAR specification for selected product lines and models.

## 3. Improved Transformer

Current adapters are most efficient at only one load and one low-line input voltage. To deliver a fixed amount of power, the adapter is designed to work under low-line conditions and to dissipate the excess power delivered by the line at normal or high-line conditions.

While maintaining the inherent limitations of this linear power supply, an additional $0.25 to $1.50 could substantially increase its efficiency. As indicated in the costing section, resistance

can be reduced by using a lower gauge of wire. Leakage inductance can be reduced by using more and thinner laminations in fabricating the transformer core. The cost of the improvements depends on the amount and thickness of the laminations, the gauge of wire selected, and the power of the adapter. Simplicity and low initial cost are the main advantages of this improved transformer design. The improved transformer can help reduce energy losses in all adapter types—AC to AC, AC to unregulated DC, and AC to regulated DC.

**Table 4: Improved Transformer**

| | Low Estimate | High Estimate |
|---|---|---|
| 1 Improved Transformer | $3.86 | $6.79 |
| 1 Regulated DC Adapter | $3.61 | $5.29 |
| **Net Cost Increase** | **$0.25** | **$1.50** |

Note: Low end was compared to a 5-watt product. High end was compared to a 10-watt product. Actual costs depend on the device, its operational load, volume pricing, and design choices. Estimates are good for the next manufacturing cycle. Actual costs and savings will vary.

This simple improvement can help audio products meet the 2-watt specification, but it is not likely to be cost-effective enough to help meet the 1-watt specification in the year 2003.

# 4. Capacitive Auxiliary Supply

In conventional designs, the input power delivery system (either a linear or a switching power supply) may be inefficient at providing low levels of power for standby operation. Neither supply has to run in standby mode if a separate standby power supply is available. The capacitive auxiliary supply replaces expensive, bulky transformers with capacitors.

**Figure 1**
**Capacitive Auxiliary Supply Design**

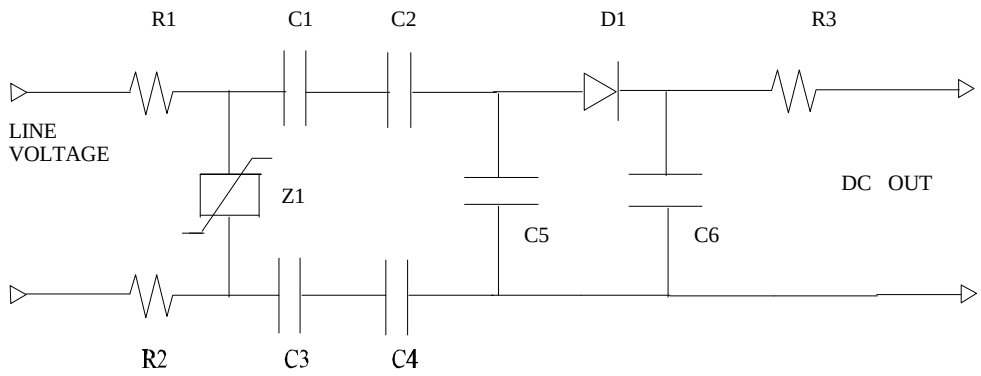


One drawback of this design is that it supplies limited current. While not suitable for use as a primary power supply, the capacitor can deliver enough standby power to small loads. Another design limitation involves transformer isolation from the power line. If only one capacitor is used to isolate the circuitry from the power line and that capacitor fails, the consumer audio device's circuitry is linked to the power line directly—an undesirable hazardous condition.

Figure 1 illustrates a capacitive auxiliary supply. For safety reasons, two capacitors are placed in series with each side of the power line. By using capacitor pairs C1 & 2 and C3 & 4, the user is protected from hazard even if one part fails. In addition, limiting resistors R1, 2, & 3 provide a current limiting function in case of catastrophic failure. Z1, a transzorb or MOV protective device, limits the voltage seen by the capacitors to prevent failure due to over-voltage. Not too

many years ago, most of the radios sold in the United States were not transformer isolated. In contrast, this design provides a double fault protection system.

If the capacitive auxiliary supply can provide enough current for the standby power needs of the product, and if the double isolation provides enough safety margin for the manufacturer, then this auxiliary power supply can be very cost effective. High cost estimates show a net cost increase of less than $0.80. A BOM appears in Appendix C.

**Table 5: Capacitive Auxiliary Supply**

| | Low Estimate | High Estimate |
|---|---|---|
| 1 Capacitive Aux Supply | $4.29 | $4.39 |
| 1 Regulated DC Adapter | $3.61 | $3.61 |
| **Net Cost Increase** | $0.68 | $0.78 |

Note: Compared only to a 5-watt product. Estimates depend on the device, its operational load, volume pricing, and design choices. Estimates are good for the next manufacturing cycle. Actual costs and savings will vary.

At the cost of a fuse ($0.20) and a zener diode ($0.07), we can protect the supply from the unlikely event of one of the capacitors (C1, 2, 3 or 4) failing. The fuse would be added between D1 and R3 and would open in case of over current. The zener diode would be placed across the DC OUT port. It would nominally not fire; however, in the case of capacitor failure, the output voltage of the supply would rise and the zener would conduct. The rush of fault current through the fuse would blow it, thereby protecting the consumer from any hazard. Such protection would be additional to the protection offered by the double fault isolation.

# 5. AC/DC Auxiliary Supply

Another alternative that provides standby current and can be added to an existing switching or linear power supply is a small add-on switcher with its own dedicated DC power supply. Because this addition need only supply power in the milliwatt range, it can use a smaller, lighter transformer, perhaps in the 2-watt range.

The required small power line transformer can be wound with smaller, cheaper wire because it need only supply the auxiliary switcher, which costs approximately $2.02. If the load does not have to be supplied with a regulated voltage, the standby current can simply be supplied by the small add-on supply, which costs approximately $1.56. A complete BOM appears in Appendix C.

**Table 6: 2-watt AC/DC Auxiliary Supply**

| | | Unregulated Estimate | Regulated Estimate |
|---|---|---|---|
| 1 AC/DC auxiliary supply | $1.56 | $2.02 | |
| **Net Cost Increase** | | $1.56 | $2.02 |

Note: Estimates depend on the device, its operational load, volume pricing, and design choices. Estimates are good for the next manufacturing cycle. Actual costs and savings will vary.

## 6. Pulse Charged Battery

This design option allows the manufacturer to use any type of existing power supply for the operation of the audio device. Then a small rechargeable battery is added to the power supply to provide power for the standby functions. When in standby mode, this battery discharges to a low state, at which point the main power supply switches on for a sufficient time to charge the battery. Adding such a battery to an audio product is straightforward. The engineering tasks involve sensing the battery voltage and ensuring that the battery charging is done as quickly as possible. If the standby current is too high, the battery would be in a constant charging state.

The net cost increase of this technology is comparable to that of the capacitive auxiliary supply and the AC/DC auxiliary supply, ranging from approximately $1.10 to $1.45. It works, and some manufacturers may find it an attractive option. The main advantage of the pulse charged battery is that when it supplies the standby load, no outlet power is needed; and the AC adapter can be switched off. The main disadvantage is that the battery costs as much as adding a discrete power supply merely to provide standby power, and the battery is limited in the amount of power it can support. A BOM appears in Appendix C.

**Table 7: Pulse Charged Battery**

| | Low Estimate | High Estimate |
|---|---|---|
| 1 PCB Auxiliary Supply | $3.71 | $5.06 |
| 1 Regulated DC Adapter | $3.61 | $3.61 |
| **Net Cost Increase** | $1.10 | $1.45 |

Note: Compared only to a 5-watt product. Estimates depend on the device, its operational load, volume pricing, and design choices. Estimates are good for the next manufacturing cycle. Actual costs and savings will vary.

# SECTION TWO: OPTIONS FOR PRODUCTS WITH NO STANDBY FUNCTIONS

Audio equipment sold with no standby power requirements—for example, with no active displays, no memory settings, and no remote control operations—are widely available. Lower end (less than $60.00) audio products, such as table radios, CD players, boom boxes, and cassette decks but not clock radios, fall into this category. Even without the need for standby current, these devices consume energy because the power delivery systems—linear AC/DC supplies—are not designed to limit electricity leakage. The solution is to improve the transformer or to disconnect it on the primary side (i.e., the high voltage side).

As described in Section One, the high side switcher, the low voltage switcher, and the improved transformer improve the power supply system. They work equally well on products without standby functions.

The Lawrence Berkeley National Laboratory (LBNL) review of existing low-power designs points to a more basic strategy to save energy—power down the device by disconnecting the primary side of the AC adapter. Section Two reviews several ways of doing so, depending on where the power transformer is located. The choice is either to disconnect at the wall adaptor, or to disconnect the power transformer located inside the device itself. Included are designs that (1) accomplish the goal of curbing electricity leakage and (2) allow for implementation paths that some manufacturers may find useful and cost effective.

# 7. Internally Mounted 110V Switch on the Audio Device

This technique is useful for devices where the transformer is housed inside the product. By bringing the 110V power line directly to the audio device, a power switch can be located on the product to disconnect the power line from the power supply circuit. Mounting the power switch on the product makes it easier for the user to access the switch.

If a product uses 110V, the cost of this switch is negligible ($0.25 or less). If the product currently uses an external adapter, some extra cost will result from the need to have the product UL listed. This requires the manufacturer to use only UL-listed components in the line voltage circuits and high power portions of the power supply, all of which will produce a slight cost increase as illustrated below. If this need for UL approval is designed in from the start, the extra cost is most likely zero.

**Table 8: Internally Mounted 110V Switch**

| | Low Estimate | High Estimate |
|---|---|---|
| 1 Regulated DC Adapter & switch | $3.61 | $3.86 |
| 1 Regulated DC Adapter | $3.61 | $3.61 |
| **Net Cost Increase** | $0.00 | $0.25 |

Note: Compared only to a 5-watt product. Estimates depend on the device, its operational load, volume pricing, and design choices. Estimates are good for the next manufacturing cycle. Actual costs and savings will vary.

# 8. Externally Mounted Designs

## 8a. Power Switch on Wall Adapter

This technique for disconnecting the transformer consists of placing an On/Off switch on the primary side of the AC adapter. When the switch is turned off, no voltage is applied to the AC adapter and the product is totally off. The cost of this method is low, up to $0.25 per switch added to the basic adapter.

This power switch uses common parts; it is cost effective and completely feasible. It has one important drawback however—the user must reach down and operate the adapter-mounted On/Off switch. This may not be easy if the adapter is plugged into a wall outlet located behind a desk or in an otherwise inconvenient spot. This option is compared to the baseline case in the table below.

**Table 9: 110V Switch on Wall Adapter**

| | Low Estimate | High Estimate |
|---|---|---|
| 1 Regulated DC Adapter & switch | $3.61 | $3.86 |
| 1 Regulated DC Adapter | $3.61 | $3.61 |
| **Net Cost Increase** | $0.00 | $0.25 |

Note: Compared only to a 5-watt product. Estimates depend on the device, its operational load, volume pricing, and design choices. Estimates are good for the next manufacturing cycle. Actual costs and savings will vary.

Although some consumer markets accept the power switch on the wall adapter, most prefer a more convenient location. To overcome this concern, two implementation paths are described below that use existing materials and techniques. They are the Relay Switched Adaptor and the Capacitive Powered Switched Adapter.

## 8b. Relay Switched Adapter

This topology adds a small power relay to the external AC adapter. The relay allows the primary side of the external adapter's transformer to be disconnected from the power line when the audio equipment is off. In a product with batteries that uses an AC adapter for line operation, the cost of implementation includes the relay and the two extra wires in the cord from the adapter to the product. With a power relay costing about $0.35, the total cost is less than $0.40.

This design option requires an initial source of energy to switch the relay on and power up the unit, hence the need for batteries. If the product does not already use batteries, the added battery

to power the relay should last for a number of years. Once the relay turns the power supply on, the extra energy source (the added battery) is not needed. The cost to add the battery would be $0.03 for an LR44 button cell and $0.06 for two contacts, a total of $0.09. A BOM appears in Appendix C.

**Table 10: Relay Switched Adapter**

| | Low Estimate | High Estimate |
|---|---|---|
| 1 Regulated DC Adapter & switch | $4.06 | $4.15 |
| 1 Regulated DC Adapter | $3.61 | $3.61 |
| **Net Cost Increase** | $0.45 | $0.54 |

Note: Compared only to a 5-watt product. Estimates depend on the device, its operational load, volume pricing, and design choices. Estimates are good for the next manufacturing cycle. Actual costs and savings will vary.

## 8c. Capacitive Powered Switched Adapter

As discussed previously, the relay switched power adapter requires a source of power to switch the relay. One way to do this without batteries is to use a capacitive power supply to obtain just enough power from the line to switch the adapter. Relays can switch with less than 100 mW of power, which is an amount of standby current well within the capabilities of this capacitive supply. This technique is similar to the Capacitive Auxiliary Supply described in Section One. One need only add a capacitive powered switched adapter (costing about $0.25) to the BOM of the Capacitive Auxiliary Supply (costing from $0.68 to $0.78) to find the estimated added cost of energizing the switch. A BOM appears in Appendix C.

**Table 11: Capacitive Powered Switched Adapter**

| | Low Estimate | High Estimate |
|---|---|---|
| 1 Capacitive Powered Switch Adapter | $4.56 | $4.71 |
| 1 Regulated DC Adapter | $3.61 | $3.61 |
| **Net Cost Increase** | $0.95 | $1.10 |

Note: Compared only to a 5-watt product. Estimates depend on the device, its operational load, volume pricing, and design choices. Estimates are good for the next manufacturing cycle. Actual costs and savings will vary.

# CONCLUSIONS

- Starting with the next manufacturing cycle in early 1999, manufacturers can produce many fully featured audio product lines with standby functions that meet the EPA 2-watt standby power limit without loss of product performance and at estimated incremental costs ranging from minus (-) $2.00 to less than $0.50 per product unit.

- Given the pace of innovation and market trends, manufacturers will likely be able to produce—before the year 2003—all mass-market, fully featured audio product lines with standby functions that meet the EPA 1-watt specification without loss of product performance at no incremental cost per product unit.

- Manufacturers can select from a variety of technologies to meet the specification, but the best opportunities lie in products consuming 5 to 10 watts. These mass-market products can operate with high side switchers, saving manufacturers up to $2.00 per product.

- Load reduction techniques can play an important role in "right-sizing" the power supplies. Efficient displays and other components can reduce the load from standby functions to help meet the EPA specification.

- Unless switchers (high side and low voltage) make inroads into higher power levels (beyond 10 watts) in a cost-effective way, top-of-the-line products (products costing more than $175) may incur costs to meet the specification.

- Current technology allows proactive manufacturers to go beyond the EPA specification. Improved low-power delivery systems (such as the high side switcher and the low voltage switcher) used in conjunction with load reduction techniques and conscientious engineering choices create opportunities to manufacture "permanently on" products that have negligible power needs when powered down. Other ENERGY STAR® products, such as computers and copiers, already have this power-down capability. At this time, no engineering or cost barriers prevent manufacturers from designing audio devices that power themselves down after delivering services and then consume less than 1 or 2 watts.