NO_X BUDGET PROGRAM
November 21, 1997

MONITORING PLAN EXAMPLES

This document contains four example monitoring plans for the NO_x Budget Program. The examples were selected to provide representative plans for a cross-section of units and methodologies. Use this document in conjunction with EXAMPLES.ZIP which contains four ASCII EDR Version 2.0 files. To printout hardcopy versions of the monitoring plan data, download and install the Monitoring Plan Checking Software Version 1.0 and unzip the examples. Follow the instructions provided with the software to import and print out the data for examples 1 - 4, which are described below:

Example #1: Two Process Coal Units Sharing a Common Stack

Example #2: Oil and Gas Unit with > 250 mmBtu Heat Capacity

Example #3: Gas Turbine with < 25O mmBtu Heat Capacity Using SCR

Example #4: Oil and Gas Peaking Unit

Example #1

Description: Two Process Coal Units Sharing a Common Stack

Monitoring: NO_x Concentration CEMS and Flow CEMS

SOLID FUEL (COAL FIRED UNITS)

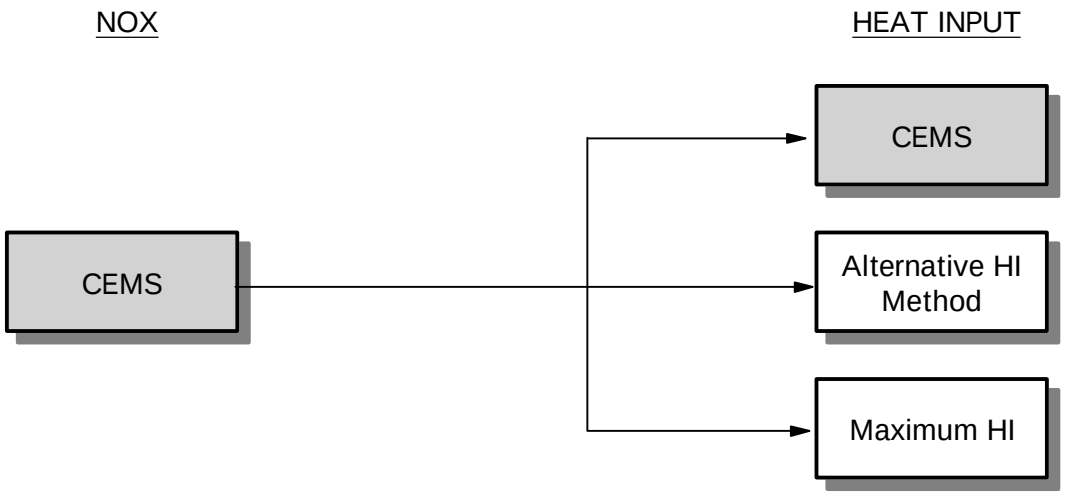

SCHEMATIC FOR EXAMPLE #1

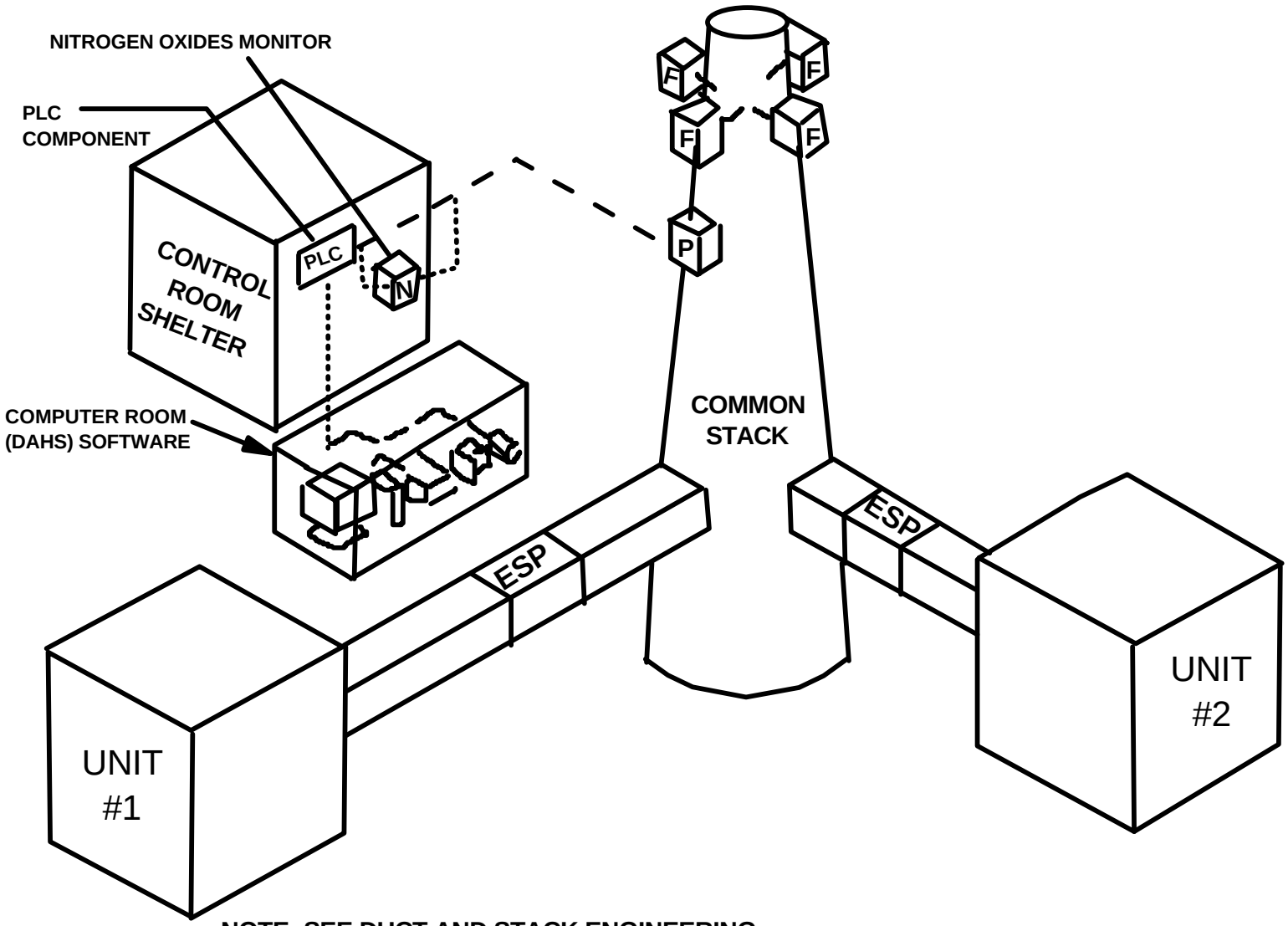

NOTE: SEE DUCT AND STACK ENGINEERING DIAGRAMS FOR DIMENSIONS AND EXACT LOCATIONS

DATA FLOW DIAGRAM FOR EXAMPLE #1

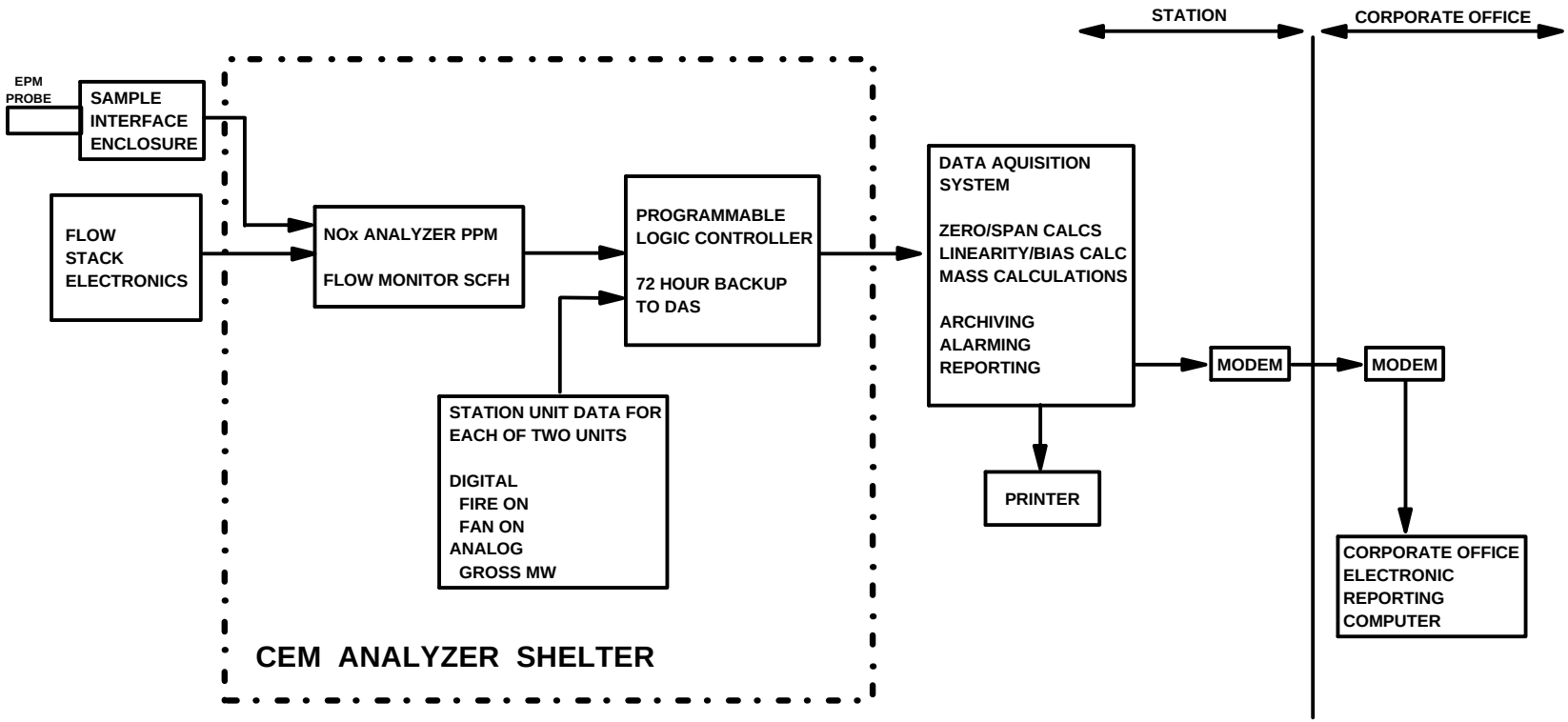

```
10000111131998V2.0
102EXAMPLE #1                                                PULP & PAPER MILL   2621MA003
503CS1   STACK 1             1                  931103
503CS1   STACK 1             2                  931103
510CS1   100200ANOXCP NOXHDINTECO                     42D            42D-3456-00299               510CS1
101200ANOXCP NOXLDINTECO                     42D            42D-3456-00299               510CS1
103300AFLOWP FLOWU  UNITED SCIENCES          100            634596                       510CS1
200200ANOXCP DAHS   ESC                      100            070198ESC                    510CS1
200300AFLOWP DAHS   ESC                      100            070198ESC                    520CS1
A100NOXMN-1  NOx Mass  Hourly= 1.194 x 10 -7 x S#(100-200) x S#(103-300) x t
520CS1   A200NOXMN-1  NOx Mass Hourly (Controlled) = 1.194 x 10 -7 x S#(101-200)x S#(103-300 x t
530CS1   NOX HTB      800.000 1.430     1000.000     1000.000PPM   98070100             0
530CS1   NOX LOL      350.000 0.000      500.000      500.000PPM   98070100             0
530CS1   FLOW HD 65400000.000 0.000 75000000.000 75000000.000SCFH  98070100             0
535CS1   MW   625H
5041     DB  2510.019931111
5051     NBP       B Q 19980701MA REG 1  MA
5851     NOXMCEM       C  PLOAD  19980701
5861     NOX LNB   PO19931111
5871     C  19931111        P
5042     DB  2530.019931103
5052     NBP       B Q 19980701MA REG 1  MA
5852     NOXMCEM       C  PLOAD  19980701
5862     NOX LNB   PO19931103
5872     C  19931103        P
```

EXAMPLE # 1

NO_x BUDGET PROGRAM EDR RECORDS USED TO REPORT QUARTERLY DATA

Type of Source: NSPS Non-Part 75 Coal-fired Boilers at Paper Mill

NO_x Concentration Monitoring System
Flow Monitoring System

Record Type	Description
Facility Data	
RT 100	Source Identification
RT 102	Facility Monitoring Plan Data
Common Stack Data	
RT 201	Hourly NO_x Concentration
RT 220	Hourly Stack Flow
RT 230	Daily Calibrations of NO_x Analyzer and Flow Analyzer
RT 231	Flow Daily Interference Check
RT 300	Hourly Operating Status and Load Data
RT 307	Quarterly and Ozone-Season NO_x Mass Emissions and Operating Hours
RT 328	Hourly NO_x Mass Emissions
RT 503	Stack Definition Records
RT 510	Monitoring Systems Records Identifying NO_x and Flow Systems
RT 520	Formulas for Calculating NO_x Mass Emission Rate Emissions
RT 530	Span Table including Monitor Ranges
RT 535	Stack Maximum Load Definition
RT 601	Quarterly Linearity Test Data
RT 602	Quarterly Linearity Test Results
RT 610	Annual RATA Test Data
RT 611	Annual RATA Test Results
Unit Data	
RT 504	Unit Information
RT 505	Indicator Record for NO_x Budget Program
RT 585	NO_x Monitoring Methodology Information
RT 586	Control Equipment Information
RT 587	Unit Category by Fuel Type
Certification Data	
RT 910	Cover Letter
RT 930	Certification Signature
RT 931	Certification Statement
RT 999	Contact Person Name and Phone Number

Example #2

Description: Oil and Gas Unit with ≥250 mmBtu Heat Capacity

Monitoring: NO_x CEMS and Appendix D Fuel Flow Monitoring

OIL/GAS FIRED NON-PEAKING UNIT WITH CAPACITY ≥ 250 MMBTU

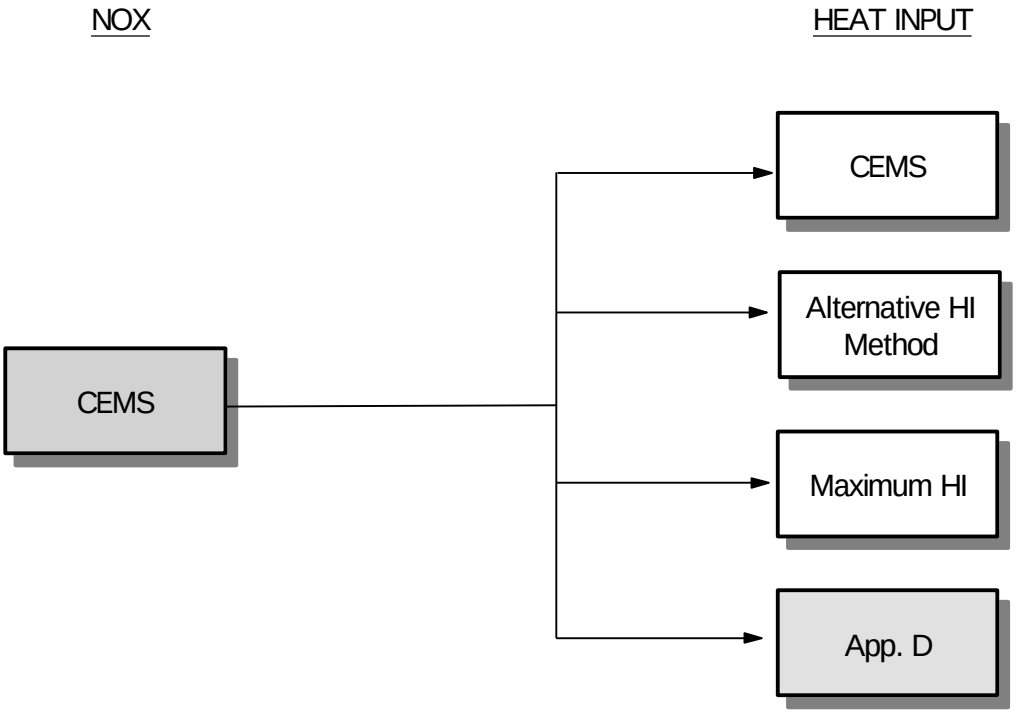

November 21, 1997

SCHEMATIC FOR EXAMPLE #2

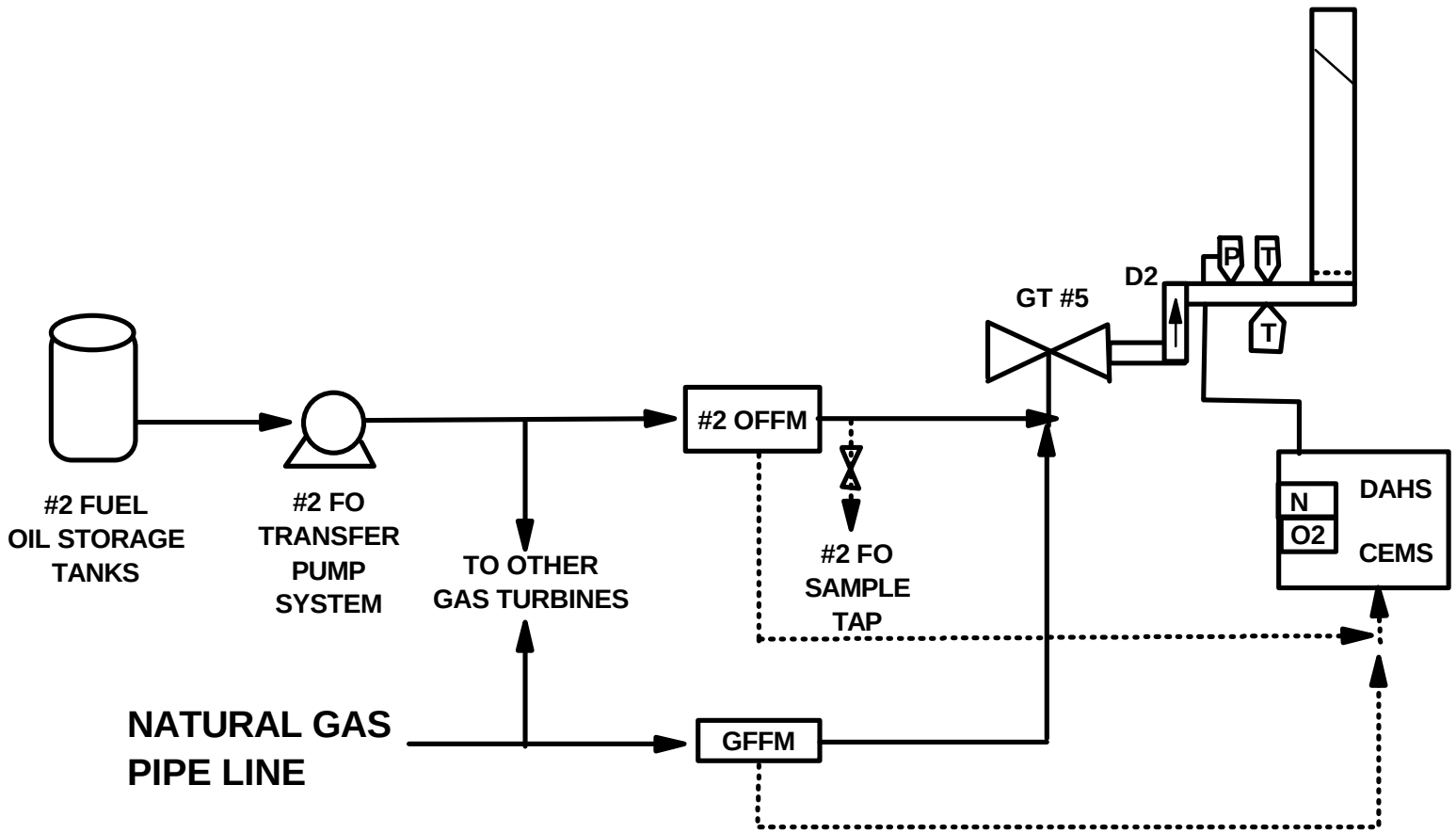

```
10000222231998V2.0
102EXAMPLE #2                                          ELECTRIC UTILITY    4911CT003
5045     CT   675.519920801
5055     NBP       NBQ 19980701MA455     MA
5105     999300AGAS P DAHS   DATA EXPERTS CORP.       NBP 1.1                                    19980701
5105     999100ANOX P DAHS   DATA EXPERTS CORP.       NBP 1.1                                    19980701
5105     999200AOILMP DAHS   DATA EXPERTS CORP.       NBP 1.1                                    19980701
5105     001100ANOX P NOX EXTTECO                     42D            42D-44684-231               19980701
5105     003100ANOX P O2D EXTCALIFORNIA ANALYTICAL    3300C          29438567                    19980701
5105     010200AOILMP OFFMCORFOXBORO                  235H           345966-345                  19980701
5105     011300AGAS P GFFMORFFUEL METERS INC.         E-5583         234-46H-2357                19980701
5205     A200HI  F-19 HI from OIL (mmBtu/hr) = S#(010-200) * GCV_OIL / 1 x E6
5205     A100NOX F-5  NOx rate(lb/mmBtu) = 1.194 x E-7 * S#(001-100) * 9190 * 20.0 / ( 20.9 - S#(002-100) )
5205     A300HI  F-20 HI from gas (mmBtu/hr) = S#(011-300) * GCV_GAS / 1 x E6
5205     A500NOXMF-10ANOx mass (lb) = F#(100) * F#(400) * TIME(UNIT)
5205     A400HI  F-20CCombined fuels HI rate (mmBtu/hr) = ( F#(200) * t(GAS) + F#(300)* t(OIL) )/t(UNIT)
5305     NOX HHD      100.000 0.565      120.000      150.000PPM   98070100             0
5305     O2  H          0.000 0.000       20.900       25.000%     98070100             0
5355     MW    85H
5405     200OILMDSL     764.9LBHR UMXMFC-9M-1988           U
5405     300GAS PNG    1463.7HSCF URVAGA-3                 U
5855     NOXRCEM       NFSPLOAD  19980701
5855     HI  OFF       DSLPLOAD  19980701
5855     HI  GFF       PNGPLOAD  19980701
5875     DSL19920801        P
5875     PNG19920801        S
```

DATA FLOW DIAGRAM FOR EXAMPLE #2

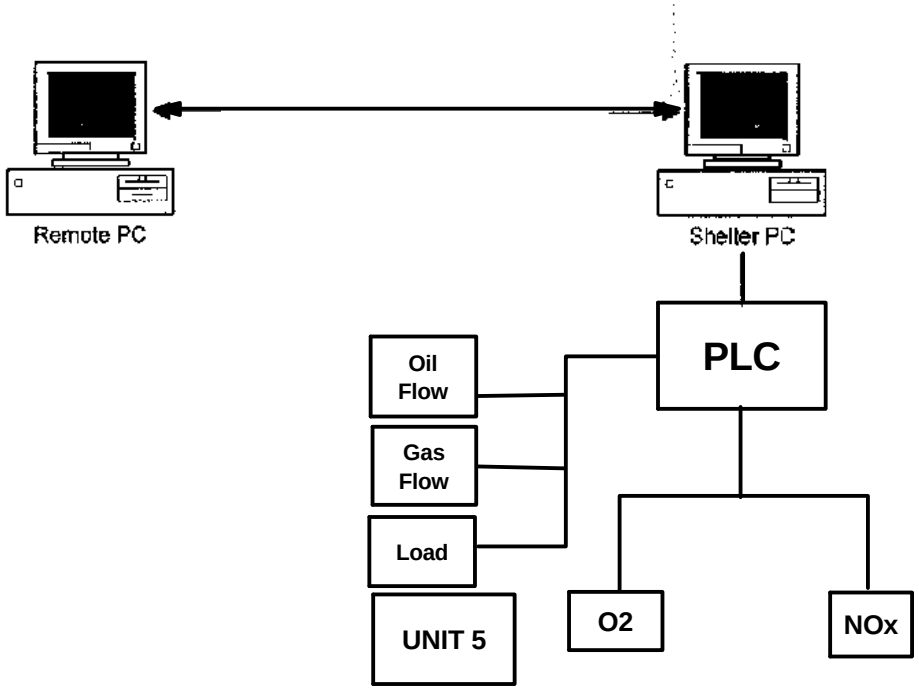

Data Acquisition and Handling System

Software Description:
Central Computer: IBM PC
PLC: GE 90/30 Series PLC for short term data storage

November 21, 1997

EXAMPLE #2

NO_x BUDGET PROGRAM EDR RECORDS USED TO REPORT QUARTERLY DATA

Type of Source: Non-Part 75 Oil and Gas Unit with ≥ 250 mmBtu Hourly Heat Input Capacity

NO_x CEMS
Appendix D Fuel Flow Monitoring for both fuels

Record Type	Description
Facility Data	
RT 100	Source Identification
RT 102	Facility Monitoring Plan Data
Unit Data	
RT 201	Hourly NO_x Concentration
RT 211	Hourly %O2
RT 230	Daily Calibrations of NO_x and O2 components
RT 300	Hourly Operating Status, Heat Input and Load Data
RT 302	Hourly Oil Flow and Heat Input
RT 303	Hourly Gas Flow and Heat Input
RT 307	Quarterly and Ozone-Season NO_x Mass Emissions, Heat Input and Operating Hours
RT 320	Hourly NO_x Emission Rate
RT 328	Hourly NO_x Mass Emissions
RT 504	Unit Information
RT 505	Indicator Record for NO_x Budget Program
RT 510	Monitoring Systems Records Identifying NO_x CEMS, OILM, and GAS Systems
RT 520	Formulas for Calculating Hourly NO_x Emission Rate, Hourly Heat Input from Gas, Hourly Heat Input from Oil, Hourly Combined Fuels Heat Input, and NO_x Mass Emissons
RT 530	Span Table including Monitor Ranges for NO_x and O_2
RT 535	Unit Maximum Load Definition
RT 540	Fuel Flow System Maximums
RT 585	NO_x and Heat Input Monitoring Methodology Information
RT 587	Unit Category by Fuel Type
RT 601	Quarterly Linearity Test Data
RT 602	Quarterly Linearity Test Results
RT 610	Annual RATA Test Data
RT 611	Annual RATA Test Results
RT 624	Annual Accuracy Test Results for FFMs
Certification Data	
RT 910	Cover Letter
RT 930	Certification Signature
RT 931	Certification Statement
RT 999	Contact Person Name and Phone Number

Example #3

Description: Gas Turbine with < 25O mmBtu Heat Capacity Using SCR

Monitoring: Unit Specific Default NO_x Rate and Long Term Fuel Flow

OIL/GAS FIRED UNIT WITH CAPACITY < 250 MMBTU OR OIL/GAS PEAKING UNIT OF ANY SIZE

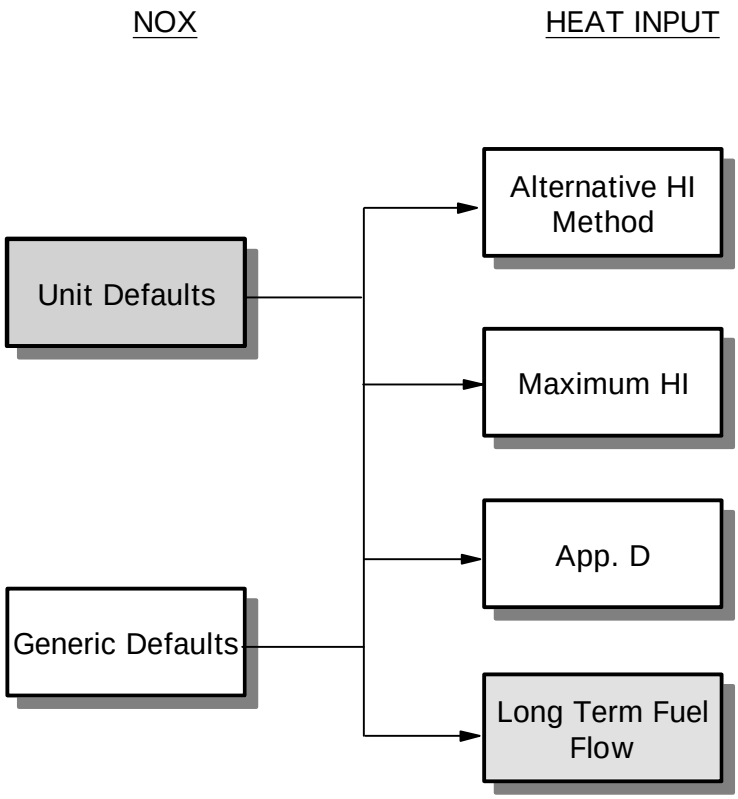

November 21,1997

SCHEMATIC FOR EXAMPLE #3

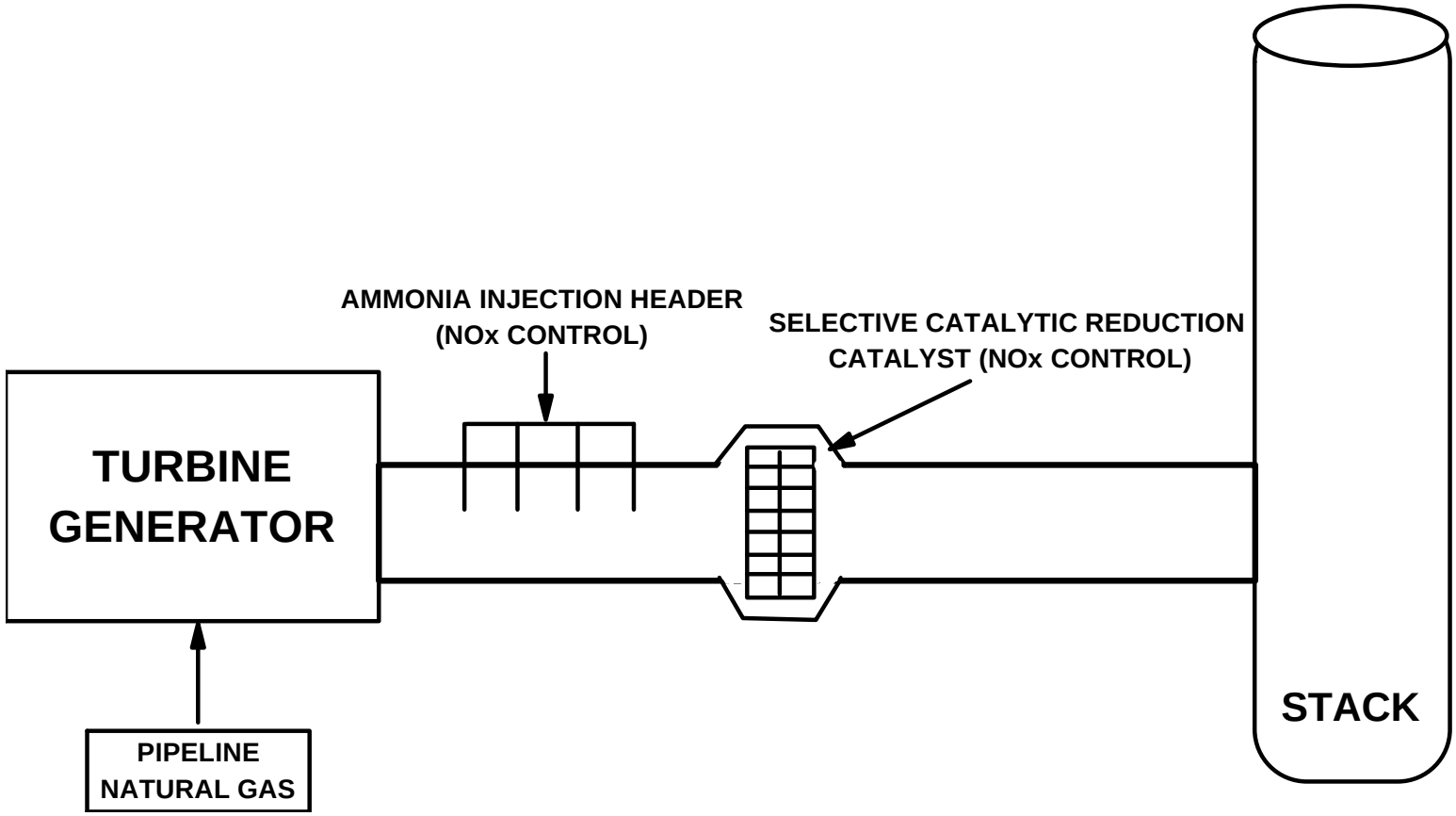

DATA FLOW DIAGRAM FOR EXAMPLE #3

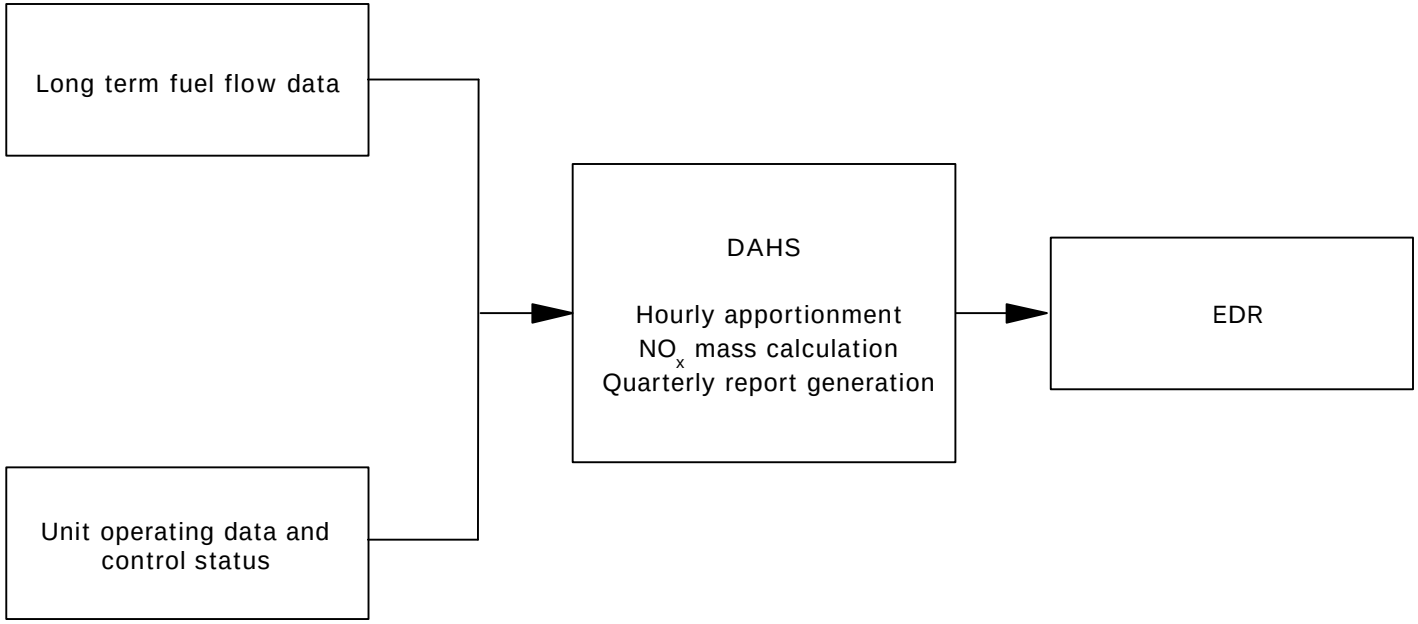

```
10000333331998V2.0
102EXAMPLE #3                      4213300002PA00002        SMALL POWER PRODUCER4911PA133      0      0
504CT4   CT   100.019970701
505CT4   NBP       B OS19980701          PA
510CT4   100100ALTGSP DAHS   ESC                      MODEL 100      ESC980101                     19980701
510CT4   101100ALTGSP BGFF                                                                         19980701
520CT4   A100HGASF-15AGas flow = S#(100)* hourly mw/(monthly mw)
520CT4   A101HI  F-20 HIgas = F#(100) * GCV / 10-6
520CT4   A102NOXMF-10AHourly NOx mass = F#(101) * NOx default emission rate
531CT4   NOXU        0.251LBMMBTUPM PNGUTEST1998070100
531CT4   NOXU        0.155LBMMBTUPM PNGCTEST1998070100
585CT4   NOXRUDEF      PNGPNA    19980701
585CT4   HI  LTGF      PNGPNA    19980701
586CT4   NOX H2O   P 19970701
587CT4   PNG19970701        P
```

November 21, 1997

EXAMPLE #3

NO_x BUDGET PROGRAM EDR RECORDS USED TO REPORT QUARTERLY DATA

Type of Source: Gas Turbine with < 250 mmBtu Hourly Heat Capacity

Unit Specific NO_x Rate
Long Term Fuel Flow for Heat Input

Record Type	**Description**
Facility Data	
RT 100	Source Identification
RT 102	Facility Monitoring Plan Data
Unit Data	
RT 300	Hourly Operating Status and Heat Input
RT 303	Hourly Apportioned Gas Fuel Flow and Calculated Heat Input
RT 306	Monthly Gas Flow
RT 307	Quarterly and Ozone-Season NO_x Mass Emissions, Heat Input and Operating Hours
RT 328	Hourly NO_x Mass Emissions
RT 504	Unit Information
RT 505	Indicator Record for NO_x Budget Program
RT 510	Monitoring Systems Records Identifying LTGS System
RT 520	Formulas for Calculating Hourly Heat Input from Gas and NO_x Mass Emissions
RT 531	NO_x Default Rate
RT 585	NO_x and Heat Input Monitoring Methodology Information
RT 586	Control Equipment Information
RT 587	Unit Category by Fuel Type
RT 650	Five-year Test Results
Certification Data	
RT 910	Cover Letter
RT 930	Certification Signature
RT 931	Certification Statement
RT 999	Contact Person Name and Phone Number

Example #4

Description: Oil and Gas Peaking Unit

Monitoring: Appendix E NO_x Correlation and Appendix D Fuel Flow Monitoring

OIL/GAS PEAKING UNIT

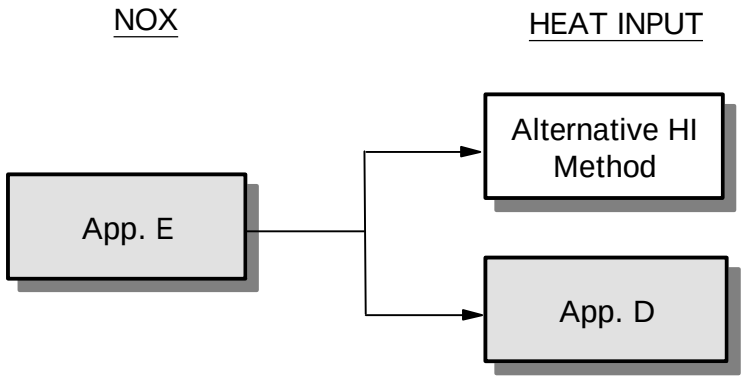

November 21, 1997

SCHEMATIC FOR EXAMPLE #4

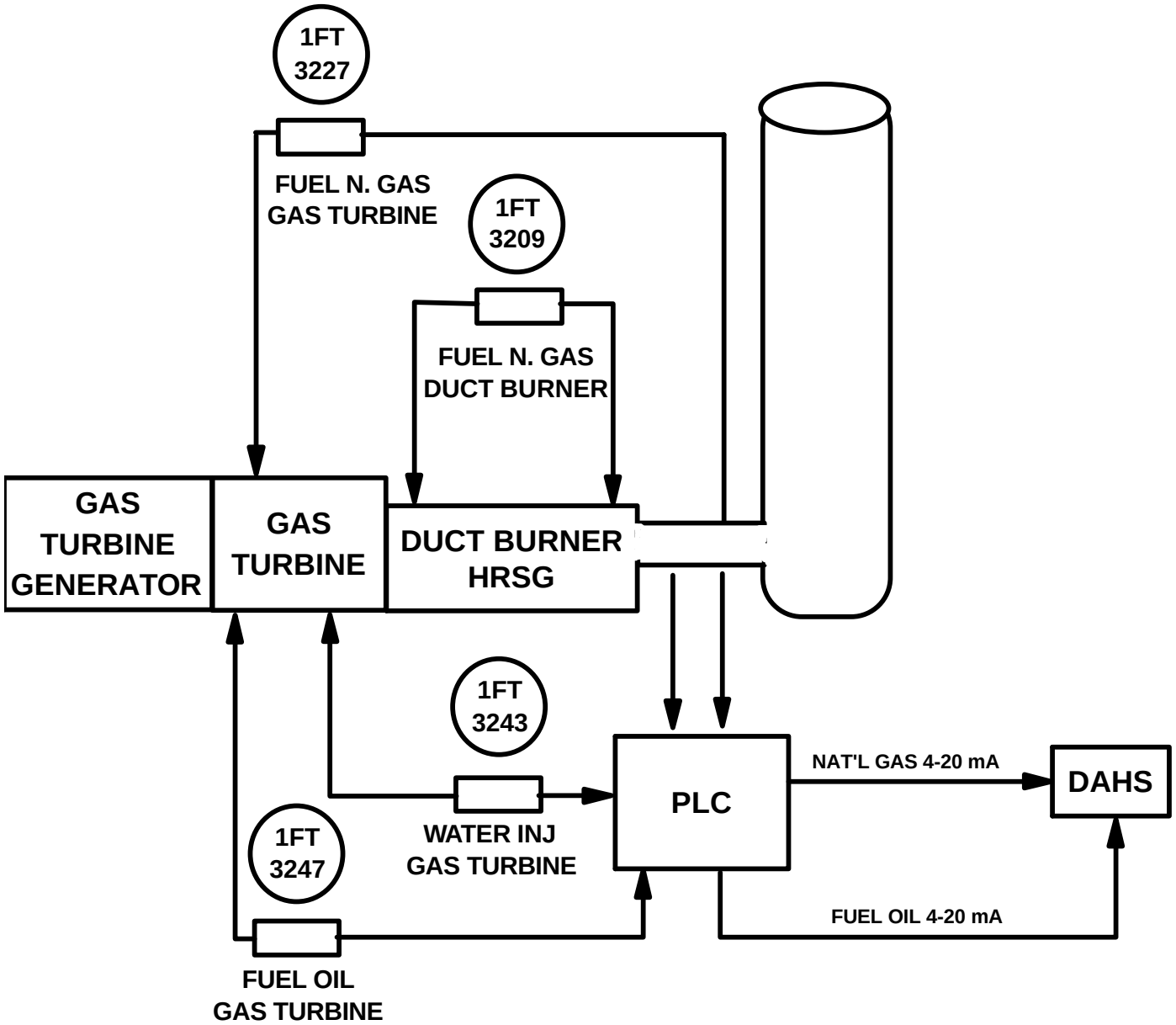

November 21, 1997

DATA FLOW DIAGRAM FOR EXAMPLE #4

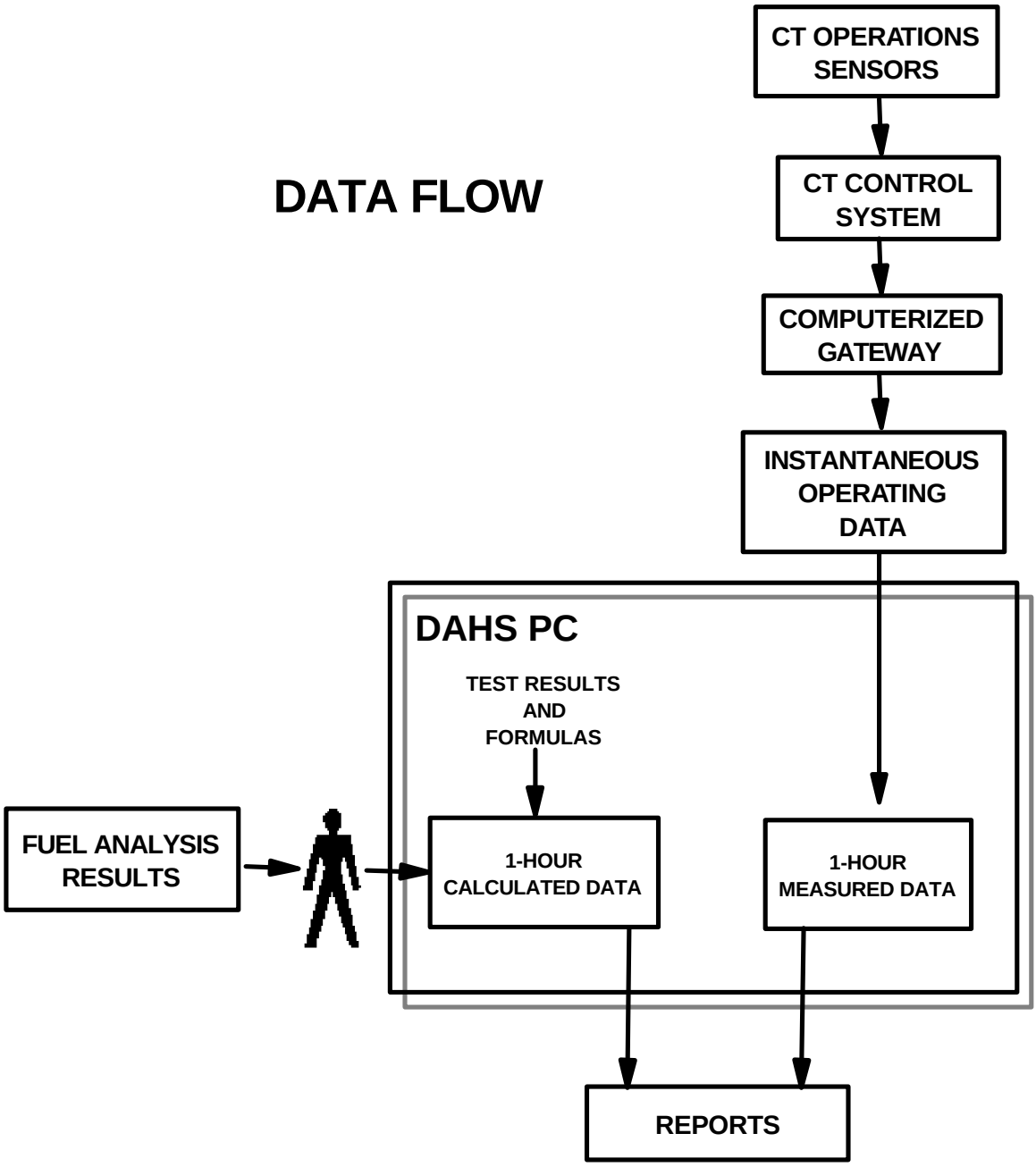

```
10000444431998V2.0
102EXAMPLE #4                                          ELECTRIC UTILITY    4911CT009      0      0
50411    CT   388.019960701
50511    NBP       B Q 19980701          CT
50711    19981997A 11.01998P 15.01999P 15.0 13.7PK
51011    D11107AOILVP DAHS   PERFECTO REPORTS         VERSION 38     98-NBP-1                      19980701
51011    D11101ANOX P DAHS   PERFECTO REPORTS         VERSION 38     98-NBP-1                      19980701
51011    D11106AGAS P DAHS   PERFECTO REPORTS         VERSION 38     98-NBP-1                      19980701
51011    D11102ANOX P DAHS   PERFECTO REPORTS         VERSION 38     98-NBP-1                      19980701
51011    F12106AGAS P GFFMVTXYOKOGAWA                 VF105-NNNA3A-S33452B072                      19980701
51011    F93107AOILVP OFFMTUREG&G                     FT-20C3XBRLEA  2002538                       19980701
51011    F94107AOILVP OFFMTUREG&G                     FT-20C3XBRLEA  2002539                       19980701
52011    A138HI  F-20 HIg ( mmBtu/hr )  = S#(F12-106) * CALORIC_VALUE_GAS / 1xE6
52011    A929OILMD-3  MASS_OIL ( lb/hr )  = F#(942) * DENSITY_OIL
52011    A939HI  F-19 HIo ( mmBtu/hr )  = F#(929) * CALORIC_VALUE_OIL / 1xE6
52011    A942FOIL     NET OIL FLOW =  S#(F93-107) - S#(F94-108)
52011    A200NOXMF-10ANOx mass from Gas  = F#(138) * NOx rate from gas correlation curve
52011    A201NOXMF-10ANOx mass from Oil = F#(939) * NOx rate from Oil correlation curve
52011    A202NOXMN-3  Total NOx mass = F#(200) + F#(201)
53511    MW    44
54011    106GAS PNG    6000.0HSCF UMXMFC-6M-1987          A
54011    107OILVOIL    6000.0GALHRUMXMFC-9M-1988          A
56011    19980401 1 0001101    1.0  164.7 0.085 0.085PNG
56011    19980401 1 1002101  164.7  237.5 0.085 0.083PNG
56011    19980401 1 2003101  237.5  317.1 0.083 0.077PNG
56011    19980401 1 3004101  317.1  434.9 0.077 0.085PNG
56011    19980402 2 0001102    1.0  160.1 0.144 0.144OIL
56011    19980402 2 1002102  160.1  227.9 0.144 0.142OIL
56011    19980402 2 2003102  227.9  396.7 0.142 0.134OIL
56011    19980402 2 3004102  306.7  426.5 0.134 0.147OIL
58511    NOXRAE        OILPNA    19980701
58511    NOXRAE        PNGPNA    19980701
58511    HI  OFF       OILPLOAD  19980701
58511    HI  GFF       PNGPLOAD  19980701
58611    NOX H2O   PO
58711    PNG19960701        PS
58711    OIL19960701        S
```

November 21, 1997

EXAMPLE #4

NO_x BUDGET PROGRAM EDR RECORDS USED TO REPORT QUARTERLY DATA

Type of Unit: Oil and Gas Peaking Unit

Appendix E NO_x Correlations for both fuels
Appendix D Fuel Flow Monitoring for both fuels

Record Type	Description
Facility Data	
RT 100	Source Identification
RT 102	Facility Monitoring Plan Data
Unit Data	
RT 300	Hourly Unit Heat Input and Operating Status
RT 302	Hourly Oil Fuel Flow and Heat Input from Oil
RT 303	Hourly Gas Fuel Flow and Heat Input from Gas
RT 307	Quarterly and Ozone-Season Mass Emissions, Heat Input and Operating Hours
RT 324	Hourly NO_x Rate and Mass Emissions for Oil and for Gas
RT 328	Hourly NOx Mass Emissions
RT 504	Unit Information
RT 505	Indicator Record for NO_x Budget Program
RT 507	Peaking Unit Qualifying Data
RT 510	Monitoring Systems Records Identifying OILV, GAS and NO_x Systems
RT 520	Formulas for Calculating Hourly Heat Input and NO_x mass from Gas and Oil, and Hourly Heat Input and NO_x mass for the unit
RT 535	Unit Maximum Load Definition
RT 540	Maximums for Fuel Flow Systems
RT 560	Appendix E Correlation Curve Segments
RT 585	NO_x and Heat Input Monitoring Methodology Information
RT 586	Control Equipment
RT 587	Unit Category by Fuel Type
RT 624	Annual Accuracy Test Results for FFMs
RT 650	Five Year Test Results for Appendix E
Certification Data	
RT 910	Cover Letter
RT 930	Certification Signature
RT 931	Certification Statement
RT 999	Contact Person Name and Phone Number

November 21, 1997

EXAMPLE #4 - ATTACHMENT 1

All American Light and Power Company
Monitoring Plan for Example # 4

Appendix E NOx Emissions
Operating Load Parameters

40 CFR, Appendix E, Section 2.3.1 requires that a stationary gas turbine record at least four operating parameters indicative of the turbine's NOx formation characteristics and the recomended ranges for the parameters. The parameters and their ranges are:

Parameter	Range
Compressor Discharge Pressure	0 - 500 PSIG
Inlet Guide Valve Position	0 - 100%
Turbine Inlet Air Temperature	-40 - 120 degrees
Water Injection Flow	0 - 32767 PPH