Diagrams of the Containment System Used in the Expanded Study

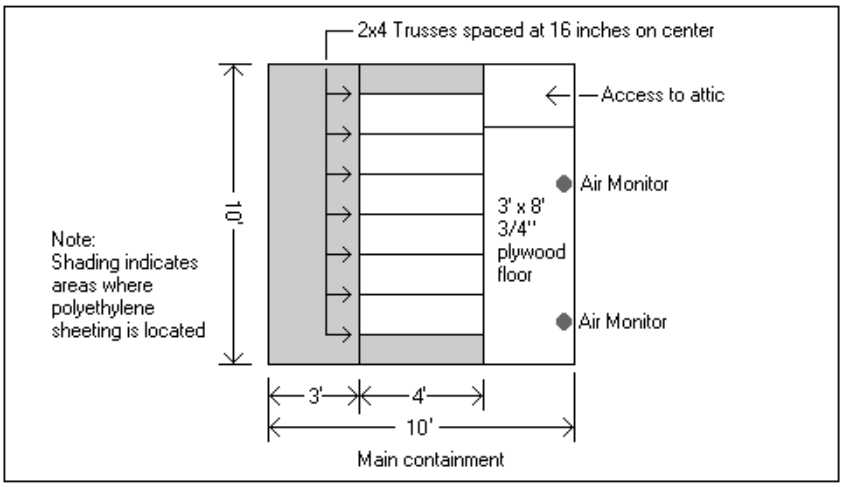

Figure 23 : Top View of Attic Floor (7 feet above main containment floor)

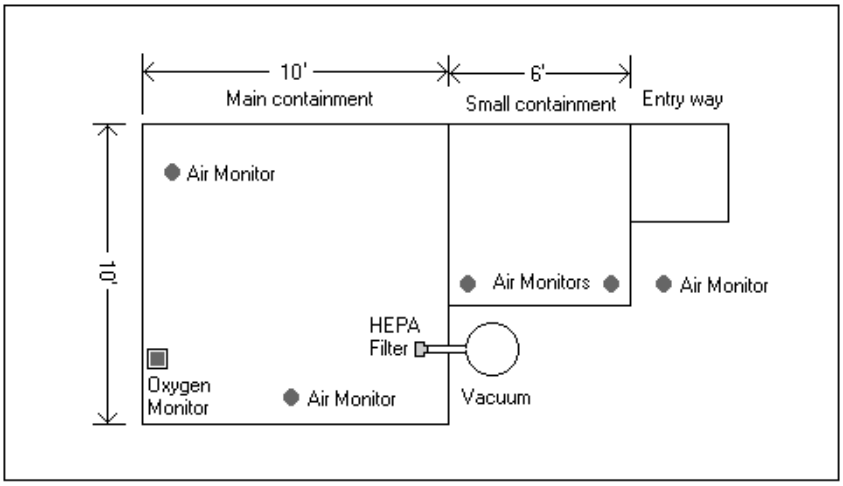

Figure 24 : Top View of Living Space

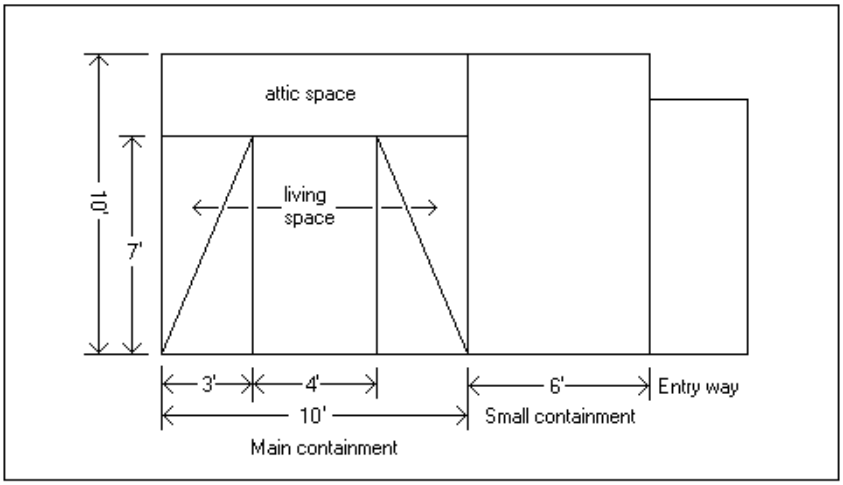

Figure 25 : Side View of Containment System