COPY

The Honorable Barbara Jacobs Rothstein

UNITED STATES DISTRICT COURT
WESTERN DISTRICT OF WASHINGTON

UNITED STATES OF AMERICA, **Plaintiff** **v.** **SHELL PIPELINE COMPANY LP fka EQUILON PIPELINE COMPANY LLC and OLYMPIC PIPE LINE COMPANY,** **Defendants.**	**Civil Action No. CV02-1178R** **CONSENT DECREE BETWEEN THE UNITED STATES OF AMERICA AND OLYMPIC PIPE LINE COMPANY**

I. BACKGROUND

A. Plaintiff, the United States of America (United States), through the Attorney General, at the request of the Administrator of the United States Environmental Protection Agency (EPA), filed a civil complaint (Complaint) against Olympic Pipe Line Company (Olympic) pursuant to the Clean Water Act (CWA), 33 U.S.C. §§ 1251-1387, seeking injunctive relief and civil penalties for the discharge of gasoline into or upon navigable waters of the United States or adjoining shorelines. The Complaint alleges that Olympic is liable for the

United States Department of Justice
Post Office Box 7611
Washington, D.C. 20044-7611
Telephone: 202-305-0300

discharge of gasoline into Hanna and Whatcom Creeks, navigable waters of the United States, and their adjoining shorelines, beginning on June 10, 1999, in violation of Sections 301(a) and 311(b)(3) of the CWA, 33 U.S.C. §§ 1311(a), 1321(b)(3).

B. The Parties agree that it is desirable to resolve the claims for civil penalties and injunctive relief asserted in the Complaint without resort to litigation.

C. This Consent Decree is entered into between the plaintiff and Olympic for the purpose of settlement and it does not constitute an admission or finding of any violation of federal or state law. This Decree may not be used in any civil proceeding of any type as evidence or proof of any fact or as evidence of the violation of any law, rule, regulation, or Court decision, except in a proceeding to enforce the provisions of this Decree.

D. Cooperative negotiation efforts of the United States and the State of Washington (State) resulted in settlements resolving civil liability both to the United States pursuant to the CWA and to the State pursuant to Wash. Rev. Code §§ 90.48, 90.56.

E. To resolve Olympic's civil liability for the claims asserted in the Complaint, Olympic will pay a total civil penalty of $2.5 million to the United States, comply with the spill prevention and mitigation requirements in Appendix A at an estimated cost of approximately $15 million, and satisfy all other terms of this Consent Decree. The United States has substantially reduced Olympic's civil penalty and agreed to a payment schedule based on financial information that Olympic provided during settlement discussions demonstrating that Olympic lacks the economic ability to pay a larger penalty.

United States Department of Justice
Post Office Box 7611
Washington, D.C. 20044-7611
Telephone: 202-305-0300

F. To resolve civil penalty liability to the State pursuant to Wash. Rev. Code §§ 90.48, 90.56, Olympic will enter into a settlement agreement with the State (State Agreement) requiring Olympic to pay a total of $2.5 million in civil penalties to the State which may include, in whole or in part, payments made for State-approved expenditures for environmental projects.

G. The Parties agree, and this Court by entering this Consent Decree finds, that this Consent Decree and these civil penalties and injunctive relief solely address the acts and omissions of Olympic alleged in the Complaint and do not address the alleged acts and omissions of any other person or entity.

H. The Parties agree, and this Court by entering this Consent Decree finds, that this Consent Decree has been negotiated by the Parties in good faith, that settlement of this matter will avoid further litigation between the Parties related to the claims in the Complaint, and that the settlement embodied by this Consent Decree is fair, reasonable, and in the public interest.

I. This Consent Decree constitutes the final, complete and exclusive agreement and understanding among the Parties with respect to the settlement embodied in this Consent Decree, and the Parties acknowledge that there are no representations, agreements or understandings relating to the settlement other than those expressly contained in this Consent Decree.

THEREFORE, with the consent of the Parties to this Consent Decree, it is ORDERED, ADJUDGED AND DECREED:

II. JURISDICTION AND VENUE

1. This Court has jurisdiction over the subject matter of this action and the Parties pursuant to 28 U.S.C. §§ 1331, 1345, 1355, and 33 U.S.C. §§ 1319(b), 1321(b)(7)(E).

United States Department of Justice
Post Office Box 7611
Washington, D.C. 20044-7611
Telephone: 202-305-0300

2. Venue is proper in this Court pursuant to 28 U.S.C. §§ 1391(b), 1395(a), and 33 U.S.C. §§ 1319(b), 1321(b)(7)(E).

3. For the purposes of this Consent Decree and the underlying claims of the United States, Olympic waives all objections and defenses that it may have to jurisdiction of the Court or to venue in this District. Olympic consents to and shall not challenge entry of this Consent Decree or this Court's jurisdiction to enter and enforce this Consent Decree.

III. PARTIES BOUND

4. This Consent Decree applies to and is binding on the United States and on Olympic and its successors and assigns. Any changes in Olympic's ownership or corporate status shall in no way alter Olympic's responsibilities pursuant to this Consent Decree. Nor shall any change in the ownership of all or a portion of the Pipeline System in any way alter Olympic's responsibilities pursuant to this Consent Decree. If Olympic transfers ownership of any portion of the Pipeline System to any other entity, Olympic nevertheless shall fulfill all requirements of this Consent Decree regarding the portion of the Pipeline System so transferred.

IV. DEFINITIONS

5. Unless otherwise expressly provided herein, the terms used in this Consent Decree that are defined in the CWA, or the regulations promulgated thereunder, shall have the meaning assigned to them in the CWA or in such regulations. Whenever terms listed below are used in this Consent Decree or the Appendix, the following definitions shall apply:

a. "Appendix" shall mean Appendix A (Spill Prevention and Mitigation Requirements) attached to this Consent Decree and all Exhibits attached to Appendix A.

United States Department of Justice
Post Office Box 7611
Washington, D.C. 20044-7611
Telephone: 202-305-0300

b. "Consent Decree" or "Decree" shall mean this document and the Appendix. In the event of a conflict between this document and the Appendix, this Decree shall control.

c. "CWA" shall mean the Clean Water Act (CWA), 33 U.S.C. §§ 1251-1387.

d. "Day" shall mean a calendar day unless expressly stated to be a working day. "Working Day" shall mean a day other than a Saturday, Sunday, or Federal holiday. In computing any period of time pursuant to this Consent Decree, where the last day would fall on a Saturday, Sunday, or Federal holiday, the period shall run until the close of business of the next Working Day.

e. "DOJ" shall mean the United States Department of Justice.

f. "EPA" shall mean the United States Environmental Protection Agency and any successor departments or agencies.

g. "Incident" shall mean the discharge of gasoline into or upon Whatcom and Hanna Creeks and their adjoining shorelines in Bellingham, Washington, beginning on June 10, 1999, as described with particularity in the Complaint filed by the United States in this case.

h. "Independent Monitoring Contractor" shall mean the Independent Monitoring Contractor selected pursuant to Section X of the Appendix.

i. "Olympic" shall mean Olympic Pipe Line Company, one of the defendants in this action, and its successors and assigns.

j. "OPA" shall mean the Oil Pollution Act of 1990 (OPA), 33 U.S.C. §§ 2701-2761.

k. "Paragraph" shall mean a portion of this Consent Decree or the Appendix identified by an Arabic numeral.

l. "Parties" shall mean the United States and Olympic.

United States Department of Justice
Post Office Box 7611
Washington, D.C. 20044-7611
Telephone: 202-305-0300

m. "Pipeline" shall mean all portions of the Pipeline System comprising line pipe, including all main lines, stub lines, and delivery lines.

n. "Pipeline System" shall mean the system owned by Olympic that is used for transporting gasoline and other petroleum products and includes approximately 400 miles of pipeline running between Ferndale, Washington, and Portland, Oregon, and associated delivery lines, stub lines, structures and buildings used for operations and administration, control equipment, pumps, valves, breakout tanks, storage tanks, and other equipment used in the operation of the pipeline, and any additions to such Pipeline System made during the pendency of this Consent Decree.

o. "RCRA" shall mean the Resource, Conservation and Recovery Act.

p. "Section" shall mean a portion of this Consent Decree and Appendix identified by a capitalized Roman numeral.

q. "State" shall mean the State of Washington.

r. "State Agreement" shall mean all documents constituting or describing the agreement between Olympic and the State resolving the State's civil penalty claims pursuant to Wash. Rev. Code §§ 90.48 and 90.56 against Olympic related to the Incident.

s. "Submit" shall mean any of the following: (1) place in certified mail in a properly addressed envelope with sufficient postage; (2) tender to an overnight courier in a properly addressed envelope, and prepay the delivery fees; or (3) hand deliver and obtain signature of recipient.

t. "Subparagraph" shall mean a portion of this Consent Decree and Appendix identified by a upper or lower case letter.

United States Department of Justice
Post Office Box 7611
Washington, D.C. 20044-7611
Telephone: 202-305-0300

u. "United States" shall mean the United States of America, including its departments, agencies, and instrumentalities.

V. GENERAL PROVISIONS

6. Compliance with Applicable Law. This Consent Decree in no way affects or relieves Olympic of its responsibility to comply with applicable federal, state, and local laws, regulations, and permits. Olympic shall perform all work required by this Consent Decree in compliance with the requirements of all applicable federal, state, and local laws, regulations, and permits. Except as expressly provided herein, the parties agree that compliance with this Consent Decree shall be no defense to any actions commenced by the United States or the State pursuant to federal, state, and local laws, regulations, and permits. This Consent Decree is not, and shall not be construed as, a permit issued pursuant to any federal, state, or local statute or regulation.

7. Permits. Olympic shall submit timely and complete applications for, and otherwise diligently seek to obtain, any and all permits or approvals from federal, state, or other governmental entities necessary to perform work that this Consent Decree requires.

VI. INJUNCTIVE RELIEF

8. To resolve the CWA injunctive relief claims alleged in the United States' Complaint, Olympic shall comply with the requirements in the Appendix.

VII. PAYMENT OF CIVIL PENALTIES

9. Olympic shall pay the United States a civil penalty of $2,500,000, payable in five installments of $500,000 each. Olympic shall pay the first installment on or before February 1, 2004. Olympic shall pay the remaining four installments on or before February 1 of each year from 2005 through and including 2008.

United States Department of Justice
Post Office Box 7611
Washington, D.C. 20044-7611
Telephone: 202-305-0300

10. Olympic shall make the payments described in Paragraph 9 in the manner specified in Section XI (Payment and Related Matters) of this Consent Decree.

11. If any payment required by Paragraph 9 of this Decree is not paid when due, Olympic shall pay stipulated penalties in accordance with Section X (Stipulated Penalties), and interest in accordance with Section XI (Payment and Related Matters).

VIII. REPORTING REQUIREMENTS

12. Progress Reports. During the pendency of this Consent Decree Olympic shall submit certified Progress Reports to EPA and the Independent Monitoring Contractor in accordance with the requirements of this Paragraph. Additionally, if requested by EPA, Olympic shall meet with EPA to discuss Olympic's compliance with the terms of this Decree. The first Progress Report shall be due within 45 days of the close of the calendar year quarter during which this Decree is entered with subsequent reports due within 30 days of the close of each calendar year quarter thereafter. On or after the due date of the fourth quarterly report, Olympic may submit a written request to EPA to reduce the frequency of required Progress Reports from quarterly to semi-annually. After receiving such a request, EPA shall respond in writing to the request. EPA may, in its discretion,

United States Department of Justice
Post Office Box 7611
Washington, D.C. 20044-7611
Telephone: 202-305-0300

either grant or deny the request, but shall not unreasonably deny the request. Each Progress Report shall describe:

a. a summary of all actions taken to comply with this Consent Decree during the reporting period including, but not limited to:

1. a summary of all of Olympic's efforts to comply with Olympic's Third Party Damage Prevention Program attached as Exhibit 4 to the Appendix including:

i. planned or completed corrective action to rectify any deficiencies discovered during any audit completed during the reporting period, or pertaining to any unresolved deficiency from any prior audit, related to the Third Party Damage Prevention Program;

ii. any third party damage to the Pipeline; and

iii. a summary of Pipeline patrolling and inspection activities;

2. a summary of all of Olympic's efforts to comply with Olympic's Management of Change Process attached as Exhibit 5 to the Appendix including:

i. planned or completed corrective action to rectify any deficiencies discovered during any audit completed during the reporting period, or pertaining to any unresolved deficiency from any prior audit, related to the Management of Change Process; and

ii. a summary of the application of the Management of Change Process for all changes that Olympic was required to document during the reporting period pursuant to Paragraph 13 of the Appendix;

United States Department of Justice
Post Office Box 7611
Washington, D.C. 20044-7611
Telephone: 202-305-0300

3. a summary of all of Olympic's efforts to comply with Olympic's Equipment Inspection, Maintenance, and Repair Program attached as Exhibit 6 to the Appendix including:

   i. planned or completed corrective action to rectify any deficiencies discovered during any audit completed during the reporting period, or pertaining to any unresolved deficiency from any prior audit, related to the Equipment Inspection, Maintenance, and Repair Program;

   ii. a summary of inspection and testing conducted; and

   iii. a summary of equipment and parts repaired or replaced;

4. a summary of all of Olympic's efforts to comply with Olympic's Controller and Employee Overview Training Program attached as Exhibit 7 to the Appendix including:

   i. planned or completed corrective action to rectify any deficiencies discovered during any audit completed during the reporting period, or pertaining to any unresolved deficiency from any prior audit, related to the Controller and Employee Overview Training Program;

   ii. a summary of controller training conducted and number of employees trained; and

   iii. a summary of employee overview training conducted, as described in Exhibit 7 to the Appendix, and the number of employees trained.

United States Department of Justice
Post Office Box 7611
Washington, D.C. 20044-7611
Telephone: 202-305-0300

b. any failure to meet the requirements of the Decree that occurred or remained unresolved at any time during the reporting period, and the reasons for any such failure to comply;

c. a summary of all actions taken or planned to correct failures to comply with this Consent Decree during the reporting period;

d. a summary of all actions that Olympic anticipates taking during the next reporting period to correct failures to comply with this Decree, including any known possible delays or other problems that may affect compliance with the Decree and Olympic's anticipated actions to resolve such delays or problems; and

e. the amount of stipulated penalties and interest, if any, accrued as of the last day of the reporting period as a result of noncompliance with the Consent Decree, including:

1. a description of each violation and the date noncompliance began and ended, if applicable;

2. a summary of the calculation of the amount of the stipulated penalty for each violation as of the last day of the reporting period;

3. a description of each violation for which Olympic has submitted to EPA an unresolved *force majeure* claim or intends to submit a *force majeure* claim pursuant to Section XII (*Force Majeure*) of this Consent Decree; and

4. a description of each violation for which Olympic has submitted to EPA an unresolved request for, or intends to submit a request for, discretionary waiver of stipulated penalties pursuant to Paragraph 25 of this Consent Decree.

United States Department of Justice
Post Office Box 7611
Washington, D.C. 20044-7611
Telephone: 202-305-0300

13. Certifications. Whenever this Consent Decree or its Appendix requires Olympic to certify a report or any other submission of information, Olympic shall submit the following written statement with the submission, signed by a responsible corporate official:

> I certify under penalty of law that this submission was prepared under my direction or supervision in accordance with a system designed to assure that qualified personnel properly gather and evaluate the information submitted. I further certify under penalty of law that, to the best of my knowledge, based on my reasonable inquiry of the person or persons who manage the system, or those persons directly responsible for gathering the information, the information submitted is true, accurate, and complete. I am aware that there are significant penalties for submitting false information, including the possibility of fine and imprisonment for knowing violations.

IX. SITE ACCESS

14. From the date of Olympic's signature on this Consent Decree until its termination date as described in Section XXII (Termination), Olympic agrees to provide EPA and its contractors, and all persons performing actions at the direction of EPA, prompt access at all reasonable times to the Pipeline System, Pipeline System employees, and all property on which the Pipeline System is located, consistent with Olympic's right of access, for the purposes of conducting any activity related to this Consent Decree including, but not limited to, assessing, monitoring, or verifying compliance with the terms of this Consent Decree, and verifying any data or information submitted by Olympic pursuant to this Consent Decree.

15. Notwithstanding any provisions of this Consent Decree, the United States retains all of its access authorities and rights, including enforcement authorities related thereto, pursuant to the CWA and any other applicable statutes or regulations.

United States Department of Justice
Post Office Box 7611
Washington, D.C. 20044-7611
Telephone: 202-305-0300

X. STIPULATED PENALTIES

16. Olympic shall be liable to the United States for stipulated penalties in the amounts set forth in Paragraphs 17 and 18 for failure to comply with the requirements of this Consent Decree, unless excused pursuant to Section XII (*Force Majeure*). "Noncompliance" by Olympic shall include failure to complete the requirements of this Consent Decree within the time allowed in the Decree in accordance with all applicable requirements of law.

17. The following stipulated penalties shall accrue per violation per day for any noncompliance identified in Subparagraphs a-b below:

Penalty Per Noncompliance	Period of Noncompliance
$500 per day or portion thereof	1st through 15th day
$1,250 per day or portion thereof	16th through 30th day
$2,500 per day or portion thereof	31st day and beyond

a. Failure to timely pay civil penalties in accordance with the terms of Section VII (Payment of Civil Penalties).

b. Failure to comply with the requirements in the Appendix other than reporting requirements.

18. The following stipulated penalties shall accrue per violation per day for any failure to comply with the reporting requirements specified in Section VIII (Reporting Requirements) and in the Appendix:

Penalty Per Noncompliance	Period of Noncompliance
$250 per day or portion thereof	1st through 15th day
$500 per day or portion thereof	16th through 30th day
$1,250 per day or portion thereof	31st day and beyond

United States Department of Justice
Post Office Box 7611
Washington, D.C. 20044-7611
Telephone: 202-305-0300

19. All stipulated penalties shall begin to accrue on the day after the complete performance is due or the day a violation occurs, and shall continue to accrue through the final day of the correction of the noncompliance or completion of the activity. Nothing herein shall prevent the simultaneous accrual of separate penalties for separate violations of this Consent Decree.

20. All stipulated penalties accrued as of the last day of each reporting period owed to the United States pursuant to this Section, and reported to the United States in Olympic's Progress Report pursuant to Paragraph 12.e(1)-(2) of this Consent Decree, shall be due and payable on the same day that the Progress Report for that reporting period is due.

21. If EPA determines that Olympic has failed to comply with a requirement of this Consent Decree, or denies a written request for discretionary waiver of penalties, EPA may give Olympic written notification of the same and describe the noncompliance. EPA may send Olympic a written demand for the payment of penalties. Stipulated penalties shall accrue as provided in Paragraph 19 of this Consent Decree, and be due and owing as provided in Paragraph 20 of this Consent Decree, however, regardless of whether or not EPA has notified Olympic of a violation. Olympic shall pay the stipulated penalties specified in EPA's written demand within the earlier of the time required by Paragraph 20 of this Consent Decree, or 30 days from the date of EPA's demand for payment unless:

a. Olympic has submitted a written request for discretionary waiver of stipulated penalties pursuant to Paragraph 25 of this Consent Decree and EPA has not responded to the written request;

b. Olympic has submitted to EPA pursuant to Paragraph 31 of this Consent Decree a written claim that a delay in compliance is caused by a *force majeure* event

United States Department of Justice
Post Office Box 7611
Washington, D.C. 20044-7611
Telephone: 202-305-0300

regarding which EPA has not issued a decision pursuant to Paragraph 32 of this Consent Decree; or

c. Olympic has submitted to EPA a written Notice of Dispute pursuant to Paragraph 35 of this Consent Decree, in which case the date that payment of any stipulated penalties is due shall be governed by Paragraph 22 of this Consent Decree.

22. Penalties shall continue to accrue, as provided in Paragraph 19 of this Consent Decree, during any dispute resolution period, but need not be paid until the following:

a. If the dispute is resolved by agreement or by a decision of EPA that is not appealed to this Court, accrued penalties determined to be owing shall be paid to EPA within 20 days of the date of the agreement or EPA's decision;

b. If the dispute is appealed to this Court, and the United States prevails in whole or in part, Olympic shall pay all accrued penalties determined by the Court to be owed to EPA within 60 days of the date of the Court's decision or order, except as provided in Subparagraph c below;

c. If the District Court's decision is appealed by either Party, Olympic shall pay all accrued penalties determined by the District Court to be owing to the United States into an interest-bearing escrow account within 60 days of the date of the Court's decision or order. Penalties shall be paid into this account as they continue to accrue, at least every 30 days. Within 20 days of the date of the final appellate court decision, the escrow agent shall pay the balance of the account to EPA or to Olympic to the extent that they prevail.

23. The payment of stipulated penalties shall not affect Olympic's obligation to satisfy all of the requirements of this Consent Decree.

United States Department of Justice
Post Office Box 7611
Washington, D.C. 20044-7611
Telephone: 202-305-0300

24. Nothing in this Consent Decree shall be construed as limiting the ability of the United States to seek any other remedies or sanctions available by virtue of Olympic's failure to comply with the requirements of this Consent Decree or any applicable statutes or regulations.

25. Notwithstanding any other provision of this Section, the United States may, in its unreviewable discretion, waive payment of any portion of the stipulated penalties that have accrued pursuant to this Consent Decree.

XI. PAYMENT AND RELATED MATTERS

26. Olympic shall make the payments described in Section VII (Payment of Civil Penalties) by Fedwire Electronic Funds Transfer (EFT) to the United States Department of Justice, in accordance with current EFT procedures and instructions provided to Olympic by the Office of the United States Attorney for the Western District of Washington. The payments shall reference the Civil Action Number assigned to this case and DOJ Number 90-5-1-1-06967, and shall specify that the payments are made toward CWA civil penalties to be deposited into the Oil Spill Liability Trust Fund pursuant to 31 U.S.C. § 1321(s), § 4304 of Pub. L. No. 101-380, and 26 U.S.C. § 9509(b)(8). Any funds received after 11:00 a.m. Eastern Time shall be credited on the next business day. Olympic shall submit to the United States, as provided in Section XV (Notices and Submissions), notice of all payments made pursuant to this Paragraph within 10 Days of the date of the payment.

27. Olympic shall make the payments described in Section X (Stipulated Penalties) by EFT to the United States Department of Justice, in accordance with current EFT procedures and instructions provided to Olympic by the Office of the United States Attorney for the Western District of Washington. The payments shall reference the Civil Action Number

United States Department of Justice
Post Office Box 7611
Washington, D.C. 20044-7611
Telephone: 202-305-0300

assigned to this case and DOJ Number 90-5-1-1-06967, and shall specify that the payments are for stipulated penalties to be deposited into the United States Treasury pursuant to 31 U.S.C. § 3302. Any funds received after 11:00 a.m. Eastern Time shall be credited on the next business day. Olympic shall submit to the United States, as provided in Section XV (Notices and Submissions), notice of all payments made pursuant to this Paragraph within 10 Days of the date of the payment.

28. If Olympic fails to timely make any payment required pursuant to Section VII (Payment of Civil Penalties) or Section X (Stipulated Penalties), then, commencing on the day after payment is due, Olympic shall be liable to the United States for interest on the unpaid balance at the composite prime rate computed by, and published in the Wall Street Journal on the date that payment was due, and any costs of enforcement and collection incurred pursuant to the Federal Debt Collection Procedure Act, 28 U.S.C. § 3001 *et seq.*

29. The United States shall be deemed a judgment creditor for purposes of collection of any penalties, interest, and expenses of enforcement and collection pursuant to this Consent Decree. Olympic specifically acknowledges that, pursuant to 26 U.S.C. § 162(f), penalty payments made pursuant to Sections VII (Payment of Civil Penalties) and X (Stipulated Penalties) of this Consent Decree shall not be deductible for federal tax purposes.

XII. *FORCE MAJEURE*

30. Olympic's obligation to comply with the requirements of this Decree shall only be deferred to the extent and for the duration that the delay is caused by *force majeure*. "*Force majeure*," for purposes of this Consent Decree, is defined as any event arising from causes beyond the control of Olympic, or of any entity controlled by Olympic , that delays or prevents the performance of any obligation pursuant to this Consent Decree despite Olympic's best efforts to fulfill the obligation. The requirement that Olympic

United States Department of Justice
Post Office Box 7611
Washington, D.C. 20044-7611
Telephone: 202-305-0300

exercise "best efforts to fulfill the obligation" includes using best efforts to anticipate any potential force majeure event and best efforts to anticipate and address the effects of any potential force majeure event (1) as it is occurring; and (2) following the potential force majeure event, such that any delay is avoided or minimized to the greatest extent possible. "*Force Majeure*" does not include financial inability to perform an obligation required by this Consent Decree.

31. If any event occurs or has occurred that may delay the performance of any obligation pursuant to this Consent Decree, whether or not caused by a *force majeure* event, Olympic shall notify orally the Manager of the Emergency Response Unit, Office of Environmental Cleanup, EPA Region 10, or his designee (ERU Manager), within 72 hours of when Olympic first knew, or in the exercise of reasonable diligence under the circumstances should have known, that the event might cause a delay. Within 30 days thereafter, Olympic shall provide a written notice to EPA explaining the reasons for the delay, the anticipated duration of the delay, all actions taken or planned to prevent or minimize the delay, a proposed schedule for implementation of any measures planned to prevent or mitigate the delay or the effect of the delay, and Olympic's rationale for attributing such delay to a *force majeure* event if Olympic intends to assert such a claim. Olympic shall include with any notice all available documentation supporting its claim that the delay was attributable to a *force majeure* event, which Olympic may supplement as additional documentation becomes available. Failure to provide written notice to EPA within 30 days containing the required information, and including all available documentation, shall preclude Olympic from asserting any claim of *force majeure* for that event. EPA's ERU Manager may, in his unreviewable discretion, waive the procedural requirements of this Paragraph. Olympic shall be deemed to know of any

United States Department of Justice
Post Office Box 7611
Washington, D.C. 20044-7611
Telephone: 202-305-0300

circumstance of which Olympic, or any entity controlled by Olympic, knew or should have known.

32. If EPA agrees that the delay or anticipated delay is attributable to a *force majeure* event, EPA will extend the time for performance of the obligations pursuant to this Consent Decree that are affected by the *force majeure* event for such time as EPA deems necessary to complete those obligations. An extension of the time for performance of the obligations affected by the *force majeure* event shall not, of itself, extend the time for performance of any other obligation. If EPA does not agree that the delay or anticipated delay has been or will be caused by a *force majeure* event, EPA will notify Olympic in writing of (1) EPA's decision regarding Olympic's *force majeure* claim; and (2) the amount of any demand for the payment of stipulated penalties, pursuant to Paragraph 21 of this Consent Decree, related to the rejected *force majeure* claim. If EPA agrees that the delay is attributable to a *force majeure* event, EPA will notify Olympic in writing of the length of the extension, if any, for performance of the obligations affected by the *force majeure* event. Any extension of time pursuant to this Section shall not be valid unless the extension of time is confirmed in writing as provided in this Paragraph.

33. The dispute resolution procedures in Section XIII (Dispute Resolution) shall apply to any dispute regarding EPA's decision regarding a *force majeure* claim that Olympic asserts pursuant to Paragraph 31 of this Consent Decree. If Olympic elects to invoke the dispute resolution procedures in Section XIII (Dispute Resolution), it shall do so no later than 20 days from the date of EPA's written decision regarding a *force majeure* claim pursuant to Paragraph 32 of this Consent Decree.

United States Department of Justice
Post Office Box 7611
Washington, D.C. 20044-7611
Telephone: 202-305-0300

XIII. DISPUTE RESOLUTION

34. The dispute resolution procedures of this Section shall be the exclusive mechanism to resolve disputes arising under, or with respect to, this Consent Decree. The procedures set forth in this Section, however, shall not apply to actions by the United States to enforce obligations of Olympic that Olympic has not timely disputed in accordance with this Section.

35. Any dispute that arises under, or with respect to, this Consent Decree shall in the first instance be the subject of good faith, informal negotiations between the Parties. The period for informal negotiations shall not exceed 21 days from the time the dispute arises, unless extended by written agreement of the Parties. The dispute shall be considered to have arisen when one party sends the other party a written Notice of Dispute.

36. If informal negotiations are unsuccessful, EPA's position shall control unless Olympic files with the Court a petition to resolve the dispute within 30 days after the conclusion of the informal negotiation period. Within 30 days after receiving a petition filed with the Court pursuant to this Paragraph, EPA may file a response. Except for disputes regarding *force majeure* claims, during the Court proceeding Olympic shall have the burden of proving by clear and convincing evidence that Olympic's proposed resolution of the issues in dispute better meets the requirements and objectives of this Consent Decree and the CWA. During any Court proceeding regarding *force majeure* claims, Olympic shall have the burden of proving by a preponderance of the evidence that the delay or anticipated delay has been or will be caused by a *force majeure* event, that the duration of the delay or the extension sought was or will be warranted under the circumstances, that best efforts were exercised to avoid and mitigate the effects of the delay, and that

United States Department of Justice
Post Office Box 7611
Washington, D.C. 20044-7611
Telephone: 202-305-0300

Olympic complied with the requirements of Paragraphs 30 and 31, above. If Olympic carries this burden, the delay at issue shall be deemed to be a *force majeure* event.

37. The invocation of dispute resolution procedures pursuant to this Section shall not extend, postpone, or affect in any way any obligation of Olympic pursuant to this Consent Decree that is not directly in dispute, unless EPA agrees otherwise. Stipulated penalties with respect to the disputed matter shall continue to accrue but payment shall be stayed pending resolution of the dispute as provided in Paragraph 22 of this Consent Decree. Notwithstanding the stay of payment, stipulated penalties shall accrue from the first day of noncompliance with any applicable provision of this Consent Decree. If Olympic does not prevail on the disputed issue, stipulated penalties shall be assessed and paid as provided in Section X (Stipulated Penalties).

XIV. EFFECT OF SETTLEMENT/RESERVATION OF RIGHTS

38. Performance of all of Olympic's obligations pursuant to this Consent Decree, and Olympic's obligations pursuant to the State Agreement discussed in Subparagraph I.F of this Consent Decree resolves any civil claims of the United States against Olympic:

a. pursuant to Sections 309 and 311 of the CWA, 33 U.S.C. §§ 1319, 1321, as specifically alleged in the Complaint; and

b. arising from the Incident for civil penalties pursuant to Section 3008(a) of RCRA, 42 U.S.C. § 6928(a), for violations of Section 3004 of RCRA, 42 U.S.C. § 6924, of which the United States had knowledge on or before the date this Decree is lodged.

39. Nothing in this Decree shall be construed to create any rights in, or grant any cause of action to, any person not a Party to this Consent Decree including, but not limited to, Shell Pipeline Company LP fka Equilon Pipeline Company LLC. The United States

United States Department of Justice
Post Office Box 7611
Washington, D.C. 20044-7611
Telephone: 202-305-0300

expressly reserves any and all rights, defenses, claims, demands, and causes of action that it may have with respect to any matter, transaction, or occurrence relating in any way to the Incident against any person not a Party hereto.

40. Notwithstanding any other provision of this Consent Decree, the United States retains all authority and reserves all rights to take any and all response actions authorized by law.

41. This Consent Decree does not resolve, and the United States expressly reserves claims against Olympic related to all other matters including, but not limited to, the following:

a. claims based on a failure by Olympic to meet a requirement of this Consent Decree;

b. liability for damages for injury to, destruction of, or loss of natural resources, and for the costs of any natural resource damage assessments;

c. criminal liability;

d. liability pursuant to regulations of the United States Department of Transportation, Research and Special Programs Administration, Office of Pipeline Safety or pursuant to the Pipeline Safety Act, 49 U.S.C. §§ 60101 *et seq.*

e. liability pursuant to Subchapter I of OPA, 33 U.S.C. §§ 2701-2719; and

f. liability for any past, current, or future violation of federal or state law not resolved pursuant to Paragraph 38 of this Consent Decree.

42. In any subsequent administrative or judicial proceeding initiated by the United States for civil penalties or injunctive relief, Olympic shall not assert, and may not maintain, any defense or claim based upon the principles of waiver, *res judicata*, collateral estoppel, claim preclusion, issue preclusion, claim-splitting, or other defenses based upon any contention that the claims raised by the United States in the subsequent proceeding

United States Department of Justice
Post Office Box 7611
Washington, D.C. 20044-7611
Telephone: 202-305-0300

should have been brought in the instant case; provided, however, that nothing in this Paragraph affects the resolution of the civil claims resolved pursuant to Paragraph 38 of this Consent Decree.

43. Olympic hereby covenants not to sue and agrees not to assert any claims related to the Incident, or response activities in connection with the Incident, against the United States pursuant to the CWA, OPA, or any other federal law, State law, or regulation including, but not limited to, any direct or indirect claim for reimbursement from the Oil Spill Liability Trust Fund, or pursuant to any other provision of law.

44. The United States, by consenting to the entry of this Consent Decree, does not warrant or aver in any manner that Olympic's complete and satisfactory compliance with this Consent Decree will constitute or result in compliance with the CWA or any other federal law or regulation.

45. Nothing in this Consent Decree shall limit or modify the authority of the United States Department of Transportation pursuant to the Pipeline Safety Act, 49 U.S.C. § 60101, *et seq.*, and the regulations promulgated thereunder including 49 C.F.R. Parts 190 and 195. Nor shall anything in this Consent Decree limit or modify the provisions of such statute and regulations or orders issued thereunder.

XV. NOTICES AND SUBMISSIONS

46. Whenever, pursuant to the terms of this Consent Decree and Appendix, written notice is required to be given or a report or other document is required to be sent by one party to another, it shall be directed to the individuals at the addresses specified below, unless

United States Department of Justice
Post Office Box 7611
Washington, D.C. 20044-7611
Telephone: 202-305-0300

those individuals or their successors give written notice of a change. All notices and submissions shall be considered effective on receipt, unless otherwise provided.

AS TO THE UNITED STATES:

As to the United States Department of Justice:

Chief, Environmental Enforcement Section
Environment and Natural Resources Division
United States Department of Justice
Post Office Box 7611
Washington, D.C. 20044-7611
DOJ #90-5-1-1-06967

As to the U.S. Environmental Protection Agency:

Regional Counsel
Region X
United States Environmental Protection Agency
1200 Sixth Avenue
Mail Stop ORC-158
Seattle, Washington 98101

Manager, Emergency Response Unit
Office of Environmental Cleanup
Region X
United States Environmental Protection Agency
1200 Sixth Avenue
Mail Stop ECL-116
Seattle, Washington 98101

AS TO OLYMPIC PIPE LINE COMPANY:

Bobby J. Talley, President
Olympic Pipe Line Company
2201 Lind Avenue, S.W., Suite 270
Renton, Washington 98055

Angelo J. Calfo
Harold Malkin
Yarmuth Wilsdon Calfo PLLC
1201 Third Avenue
3080 Washington Mutual Tower
Seattle, Washington 98101-3000

XVI. RECORD RETENTION/ACCESS TO INFORMATION

47. In addition to complying with any record-keeping requirements pursuant to applicable law and regulations, regardless of any contrary corporate retention policy, Olympic shall preserve and retain, during the pendency of this Consent Decree and for a minimum of six years after termination of this Consent Decree, all records, documents and information in the possession, custody, or control of Olympic , or which come into Olympic's possession, custody, or control, that relate in any manner to (1) the Incident; (2) repairs, modifications, or maintenance to the Pipeline System related to the Incident; or (3) implementation of this Consent Decree, including without limitation, reports, correspondence, data, or other documents or information related to the work performed pursuant to Section VI (Injunctive Relief) and the Appendix.

48. At any time prior to termination of this Consent Decree, and for six years thereafter, Olympic shall provide to the United States, within 30 days of the date of a request, all documents and information responsive to the request, within the possession, custody, or control of Olympic, described in the preceding paragraph.

49. Olympic may assert business confidentiality claims covering part or all of the documents or information provided to the United States pursuant to this Consent Decree to the extent authorized by, and in accordance with, 40 C.F.R. Part 2. Documents or information that EPA determines to be confidential will be afforded the protection specified in 40 C.F.R. Part 2, Subpart B. If no claim of confidentiality accompanies documents or information when they are submitted to EPA, or if EPA has notified Olympic that the documents or information are not confidential pursuant to applicable law, the public may be given access to such documents or information without further notice to Olympic.

United States Department of Justice
Post Office Box 7611
Washington, D.C. 20044-7611
Telephone: 202-305-0300

50. Olympic may assert that certain documents, records and other information are privileged pursuant to the attorney-client privilege or any other privilege recognized by federal law. If Olympic asserts such a privilege instead of providing documents, it shall provide the United States with the following: (1) the title of the document, record, or information; (2) the date of the document, record, or information; (3) the name and title of the author of the document, record, or information; (4) the name and title of each addressee and recipient; (5) a description of the contents of the document, record, or information; and (6) the privilege asserted by Olympic. Nevertheless, no documents, reports, or other information created or generated pursuant to the requirements of the Consent Decree shall be withheld on the grounds that they are privileged, nor shall any claim of confidentiality be made with respect to such documents, reports, or information. If a claim of privilege applies only to a portion of a document, the document shall be provided to the United States in redacted form to mask the privileged information only.

51. Nothing in this Consent Decree shall limit the access and information-gathering authorities and rights of the United States pursuant to any federal law or regulation, including without limitation, related enforcement authorities pursuant to the CWA and OPA.

XVII. RETENTION OF JURISDICTION

52. This Consent Decree shall be considered an enforceable judgment for purposes of post-judgment collection in accordance with the provisions of the Consent Decree, Rule 69 of the Federal Rules of Civil Procedure, and other applicable federal statutory authority.

53. This Court retains jurisdiction over both the subject matter of this Consent Decree and the Parties for the duration of the performance of the terms and provisions of this

United States Department of Justice
Post Office Box 7611
Washington, D.C. 20044-7611
Telephone: 202-305-0300

Consent Decree for the purpose of enabling either of the Parties to apply to this Court at any time for such further order, direction, and relief as may be necessary or appropriate for the construction or modification of this Consent Decree, or to effectuate or enforce compliance with its terms, or to resolve disputes in accordance with Section XIII (Dispute Resolution).

XVIII. MODIFICATION

54. Modifications to the schedules for completion of injunctive relief pursuant to this Consent Decree may be made without consent of the Court by written agreement between Olympic and EPA. Except as provided in the preceding sentence, no material modifications shall be made to this Consent Decree without written notification to and written approval by the United States, Olympic, and the Court. Modifications that do not materially alter Olympic's obligations pursuant to this Consent Decree may be made without consent of the Court by written agreement between the Parties.

XIX. LODGING AND OPPORTUNITY FOR PUBLIC COMMENT

55. This Consent Decree shall be lodged with the Court for a period of at least 30 days for public notice and comment in accordance with 28 C.F.R. § 50.7. The United States reserves the right to withdraw or withhold its consent to the Consent Decree if the United States becomes aware of facts or considerations that indicate to the United States that the Consent Decree is inappropriate, improper, or inadequate. Olympic agrees not to oppose entry of this Consent Decree or to challenge any provision of this Consent Decree unless the United States has notified Olympic in writing that it no longer supports entry of the Consent Decree. Olympic consents to entry of this Consent Decree without further notice.

United States Department of Justice
Post Office Box 7611
Washington, D.C. 20044-7611
Telephone: 202-305-0300

56. If for any reason the Court declines to approve this Consent Decree in the form presented, this agreement is voidable at the sole discretion of any Party and the terms of the agreement shall not be used as evidence in any litigation.

XX. EFFECTIVE DATE

57. The effective date of this Consent Decree is that date upon which it is entered by the Court.

XXI. INTEGRATION/APPENDIX

58. This Consent Decree, Appendix A (Spill Prevention and Mitigation Requirements), and Exhibits 1-7 to Appendix A, constitute the final, complete and exclusive Consent Decree and understanding between the Parties regarding the settlement embodied in this Consent Decree. The Parties acknowledge that there are no representations, agreements, or understandings relating to the settlement other than those expressly contained in this Consent Decree. The following Appendix and Exhibits are attached to and incorporated into this Consent Decree:

"Appendix A" is the Spill Prevention and Mitigation Requirements referenced in Paragraph 8 of this Consent Decree.

"Exhibit 1 to Appendix A" is ASME B31.4-2002 as defined in Subparagraph 1.b of Appendix A.

"Exhibit 2 to Appendix A" is ASME B31G-1991 as defined in Subparagraph 1.c of Appendix A.

"Exhibit 3 to Appendix A" is Olympic's Form of ILI Repair Report.

"Exhibit 4 to Appendix A" is Olympic's Third Party Damage Prevention Program referenced in Paragraph 11 of Appendix A.

United States Department of Justice
Post Office Box 7611
Washington, D.C. 20044-7611
Telephone: 202-305-0300

"Exhibit 5 to Appendix A" is Olympic's Management of Change Process referenced in Paragraph 13 of Appendix A.

"Exhibit 6 to Appendix A" is Olympic's Equipment Inspection, Maintenance, and Repair Program referenced in Paragraph 15 of Appendix A.

"Exhibit 7 to Appendix A" is Olympic's Controller and Employee Overview Training Program referenced in Paragraph 17 of Appendix A.

XXII. TERMINATION

59. Not earlier than five years after entry of this Consent Decree, this Decree shall be subject to termination, in whole or in part, on motion by either Party after Olympic fully satisfies the requirements of all or any part of this Consent Decree, except those obligations required pursuant to Section XVI (Record Retention/Access to Information). At such time as Olympic believes it has fulfilled all such requirements, Olympic shall so certify to the United States. Not earlier than 30 days after such certification, either party may apply to the Court for termination of all or any part of the Consent Decree. The obligations set forth in Section XIV (Effect of Settlement/Reservation of Rights) and Section XVI (Record Retention/Access to Information) shall survive termination of the Consent Decree as contractual obligations.

XXIII. SIGNATORIES/SERVICE

60. The Parties' undersigned representatives certify that they are fully authorized to enter into the terms and conditions of this Consent Decree and to execute and legally bind such Party to this document.

61. Olympic shall identify, on the attached signature page, the name, address, and telephone number of an agent who is authorized to accept service by mail on behalf of Olympic with respect to all matters arising under or relating to this Consent Decree.

United States Department of Justice
Post Office Box 7611
Washington, D.C. 20044-7611
Telephone: 202-305-0300

XXIV. COSTS

62. Each party shall bear its own costs and attorneys' fees in the action resolved by this Consent Decree.

Dated this _____ day of _____, 2003.

COPY

_____
UNITED STATES DISTRICT JUDGE

THE UNDERSIGNED PARTIES enter into this Consent Decree relating to the Incident.

FOR THE UNITED STATES OF AMERICA

Date: 1.13.03

Tom Sansonetti
THOMAS L. SANSONETTI
Assistant Attorney General
Environment and Natural Resources Division
United States Department of Justice

Wayne T. Ault
WAYNE T. AULT
Trial Attorney
United States Department of Justice
Environment and Natural Resources Division
Environmental Enforcement Section
Benjamin Franklin Station
Post Office Box 7611
Washington, D.C. 20044-7611
Telephone: 202-305-0300

FOR THE UNITED STATES ENVIRONMENTAL PROTECTION AGENCY

JOHN PETER SUAREZ
Assistant Administrator for
Enforcement and Compliance Assurance
United States Environmental Protection Agency

CHERYL T. ROSE
Attorney-Advisor
Office of Enforcement and Compliance Assurance
United States Environmental Protection Agency
Mail Code 2243A
1200 Pennsylvania Avenue, N.W.
Washington, D.C. 20460

United States Department of Justice
Post Office Box 7611
Washington, D.C. 20044-7611
Telephone: 202-305-0300

L. JOHN IANI
Regional Administrator, Region X
United States Environmental Protection Agency

KEITH E. COHON
Assistant Regional Counsel, Region X
United States Environmental Protection Agency
1200 Sixth Avenue
Seattle, Washington 98101

United States Department of Justice
Post Office Box 7611
Washington, D.C. 20044-7611
Telephone: 202-305-0300

FOR OLYMPIC PIPE LINE COMPANY:

BOBBY J. TALLEY
President
Olympic Pipe Line Company
2201 Lind Avenue, S.W., Suite 270
Renton, Washington 98055

Agents Authorized to Accept Service on Behalf of Olympic Pipe Line Company:

ANGELO J. CALFO
HAROLD MALKIN
Yarmuth Wilsdon Calfo PLLC
1201 Third Avenue
3080 Washington Mutual Tower
Seattle, Washington 98101-3000

Counsel for Olympic Pipe Line Company

United States Department of Justice
Post Office Box 7611
Washington, D.C. 20044-7611
Telephone: 202-305-0300

A

The Honorable Barbara Jacobs Rothstein

UNITED STATES DISTRICT COURT
WESTERN DISTRICT OF WASHINGTON

UNITED STATES OF AMERICA,	)	
	)	
Plaintiff	)	
	)	**Civil Action No. CV02-1178R**
v.	)	
	)	**APPENDIX A TO THE CONSENT DECREE BETWEEN THE UNITED STATES OF AMERICA AND OLYMPIC PIPELINE COMPANY (SPILL PREVENTION AND MITIGATION REQUIREMENTS)**
SHELL PIPELINE COMPANY LP fka EQUILON PIPELINE COMPANY LLC and OLYMPIC PIPE LINE COMPANY,	)	
	)	
Defendants.	)	

I. INTRODUCTION

A. The United States alleges in the Complaint, based on information currently available to EPA, that the following factors caused or contributed to the Incident involving the Pipeline System:

1. Failure to supervise, inspect, or monitor construction activity near the Pipeline so as to prevent or detect physical damage to the Pipeline near the location of the rupture;

United States Department of Justice
Post Office Box 7611
Washington, D.C. 20044-7611
Telephone: 202-305-0300

2. Failure to evaluate properly and repair physical damage to the pipeline near the location of the rupture;

3. Inadequacies in the design, construction, maintenance, and operation of a facility on the Pipeline System known as the Bayview Station and equipment located at or near the Bayview Station;

4. Inadequacy of the computer system used to monitor and control the Pipeline System;

5. Operator error on the day of the rupture; and

6. Management decisions related to these factors.

B. Based on initial reports and information currently available to EPA, the United States alleges that the portion of the Pipeline that ruptured was buried at a depth of several feet.

C. Olympic, by entering into the Consent Decree and performing the work required by, and complying with the other requirements of, this Appendix, does not admit any liability to the United States arising out of the transactions or occurrences alleged in the Complaint.

D. The Spill Prevention and Mitigation Requirements described below are designed to address the alleged causes or contributing factors of the Incident described above in Paragraph A.

II. DEFINITIONS

1. Unless otherwise expressly provided herein, the terms used in this Appendix that are defined in the CWA, or in the regulations promulgated thereunder, shall have the meaning assigned to them in the CWA, or in such regulations. Additionally, the terms used in this Appendix shall have the meaning assigned to them in Paragraph 5 of the Consent Decree to which this Appendix is attached, ASME B31.4-2002, and

United States Department of Justice
Post Office Box 7611
Washington, D.C. 20044-7611
Telephone: 202-305-0300

ASME B31G-1991. Whenever terms listed below are used in this Appendix or in the Exhibits attached to this Appendix, the following definitions shall apply:

a. "ASME" shall mean the American Society of Mechanical Engineers.

b. "ASME B31.4-2002" shall mean a document entitled "Pipeline Transportation Systems for Liquid Hydrocarbons and Other Liquids, ASME Code for Pressure Piping," 2002 edition, a copy of which is attached to, and incorporated into this Appendix as Exhibit 1.

c. "ASME B31G-1991" shall mean standards prescribed by the ASME entitled "Manual for Determining the Remaining Strength of Corroded Pipelines," a copy of which is attached to, and incorporated into this Appendix as Exhibit 2.

d. "Analyzed ILI Data" shall mean a written report from an ILI Contractor or other qualified employee or agent of Olympic analyzing raw data from an ILI to identify suspected or predicted defects and anomalies.

e. "Bottom-Side of the Pipeline" shall mean the portion of the Pipeline below the 4:00 o'clock and 8:00 o'clock positions on any part of the Pipeline.

f. "BP" shall mean BP PLC.

g. "ILI" shall mean in-line inspection.

h. "ILI Contractor" shall mean an entity in the business of performing ILIs of hazardous liquid pipelines using ILI tools that generate data regarding suspected defects on hazardous liquid pipelines and provide analysis of the data.

i. "IMC or Independent Monitoring Contractor" shall mean the Independent Monitoring Contractor selected pursuant to Section X of this Appendix.

j. "MAOP" shall mean maximum allowable operating pressure.

k. "MFL" shall mean magnetic flux leakage.

United States Department of Justice
Post Office Box 7611
Washington, D.C. 20044-7611
Telephone: 202-305-0300

l. "One-Call System" shall mean a system which complies with Revised Code of Washington § 19.122 or Oregon Revised Statutes § 757.557 whereby interested members of the public may, without charge, obtain information about the location of buried pipe.

m. "OPS" shall mean the United States Department of Transportation, Research and Special Programs Administration, Office of Pipeline Safety.

n. "Pipeline" shall mean all portions of the Pipeline System comprising line pipe, including all main lines, stub lines, and delivery lines.

o. "SMYS" shall mean the specified minimum yield strength.

p. "Supervisory Control and Data Acquisition System" or "SCADA System" shall mean a computer-based communications system that gathers, processes, and displays data from field instrumentation and allows an operations controller to execute control functions. Olympic's SCADA System consists of a network of (1) SCADA System host computers and associated peripherals and software; (2) pipeline controller workstations, consoles, and software; and (3) field communications and control devices including programmable logic controllers, remote terminal units, flow computers, and software. Olympic's SCADA System operates on a private network that is isolated from any corporate network and the Internet by means of firewall appliances.

q. "Top-Side of the Pipeline" shall mean the portion of the Pipeline above the 8:00 o'clock and 4:00 o'clock positions on any part of the Pipeline.

III. CONSTRUCTION OF THIS APPENDIX

2. If compliance with a provision of an ASME publication would prevent compliance with this Consent Decree, Olympic shall comply with this Consent Decree. If compliance

United States Department of Justice
Post Office Box 7611
Washington, D.C. 20044-7611
Telephone: 202-305-0300

with a provision of this Consent Decree or of an ASME publication would prevent compliance with an applicable provision of law, regulation, or OPS Corrective Action Order CPF No. 59505H, Olympic shall comply with the requirements of applicable laws, regulations, or OPS Corrective Action Order CPF No. 59505H.

IV. INSPECTION FOR DEFECTS IN PIPING AND REPAIRS

A. ILI Inspections and Repairs

3. ILIs Using Deformation and MFL Tools.

The Pipeline consists of the segments described in the table below.

Segment	Size	Length (miles)
Cherry Point-Ferndale	16"	5.0
Ferndale-Allen	16"	41.1
Anacortes-Allen	16"	10.3
Allen-Renton	16"	75.6
Allen-Renton	20"	76.2
Renton-Seattle DF	12"	12.4
Renton-SeaTac Terminal	12"	5.5
Renton-Portland DF	14"	147.6
Tacoma Jct-Tacoma DF	8"	3.9
Olympia Jct-Olympia DF	6"	15.5
Vancouver Jct-Vancouver DF	12"	4.5

a. Olympic shall perform an ILI during 2003 using a deformation ILI tool on all segments of the Pipeline, as described in the above table.

b. Olympic shall perform ILIs using both MFL and deformation ILI tools on each segment of the Pipeline, as described in the above table, during 2004 or 2005.

c. For each ILI, Olympic shall ensure that each vendor calibrates the inspection tool in accordance with applicable vendor standards and that each vendor provides verification of the calibration to Olympic.

4. Excavation Requirements and Standards. Within 6 months after Olympic receives or develops Analyzed ILI Data for the ILIs required by Paragraph 3 of this Appendix, but in

United States Department of Justice
Post Office Box 7611
Washington, D.C. 20044-7611
Telephone: 202-305-0300

no event later than 1 year after Olympic or its ILI Contractor completes each ILI required by Paragraph 3 of this Appendix, Olympic shall excavate and further evaluate the need to repair any portion of the Pipeline for which Olympic has reasonable grounds to predict or suspect any of the defects or anomalies described below.

a. dents on the Top-Side of the Pipeline of a depth that exceeds 2% of the nominal pipe diameter;

b. dents on the Bottom-Side of the Pipeline of a depth that is greater than or equal to 4% of the nominal pipe diameter;

c. any dent located on any detected long seam, repair weld, or girth weld;

d. any dent, identified by ILI tools, which has indication of metal loss;

e. metal loss anomalies located in the main body of the Pipeline that have depths equal to or greater than 40% of the nominal wall thickness;

f. metal loss anomalies located in the main body of the Pipeline that have depths between 20% and 40% of the nominal wall thickness and either have (1) a predicted failure pressure less than or equal to 100% of the SMYS of the affected pipe based on criterion in ASME B31G-1991; or (2) a predicted failure pressure greater than or equal to 139% of a reduced MAOP if the reduced MAOP is calculated based on criteria in ASME B31G-1991 related to factors other than pipe design;

g. metal loss anomalies located within 0.2 feet of a girth weld that have depths equal to, or greater than 40% of the nominal wall thickness;

h. metal loss anomalies that are determined to be preferential to any detected long seams, girth welds, or heat affected zones;

i. metal loss anomalies identified by ILI tools as gouges or grooves;

United States Department of Justice
Post Office Box 7611
Washington, D.C. 20044-7611
Telephone: 202-305-0300

j. any casing-end that is either touching the carrier pipe or is eccentric and has associated metal loss; or

k. metal objects that are touching the pipe.

5. Repair Requirements and Standards. Within 6 months after Olympic receives or develops Analyzed ILI Data for ILIs required by Paragraph 3 of this Appendix, but in no event later than 1 year after Olympic or its ILI Contractor completes each ILI required by Paragraph 3 of this Appendix, Olympic shall repair, or remove and replace, any portion of the Pipeline that has any of the defects described below. Olympic shall perform the repair, or removal and replacement, of any portion of the Pipeline pursuant to this Paragraph in accordance with the standards in ASME B31.4-2002 Parts 451.6.2(b)-(c) and 451.6.3, and in a manner sufficient to ensure the integrity of the Pipeline.

a. dents of any size containing a scratch, crack, gouge, or groove;

b. dents of any size with metal loss;

c. dents of any size that affect pipe curvature at a girth weld, longitudinal seam weld, or repair weld such as a patch, sleeve, or puddle weld;

d. dents of any size coincident with an internal defect;

e. dents of a depth that is greater than or equal to 4% of the nominal pipe diameter;

f. selective seam corrosion of, or along, seam welds;

g. corrosion metal loss with a failure pressure less than or equal to 100% of the SMYS of the affected pipe, calculated using the criterion in ASME B31G-1991;

h. metal loss greater than 50% of the nominal wall thickness in areas of general corrosion;

i. weld anomalies with a metal loss greater than 50% of nominal wall thickness;

j. cracks of any size;

United States Department of Justice
Post Office Box 7611
Washington, D.C. 20044-7611
Telephone: 202-305-0300

k. scratches, gouges, and grooves of any size; or

l. arc burns of any size.

6. Notwithstanding the schedule for excavations and repairs in Paragraphs 4 and 5 of this Appendix, Olympic shall repair immediately any defect that poses an imminent threat to the integrity of the Pipeline including, but not limited to, corrosion metal loss greater than or equal to 80% of the nominal wall thickness. For the purpose of this Paragraph only, "immediately" shall mean as soon as reasonably possible but in any event no longer than 30 days.

7. Extensions of Time to Complete Excavations and Repairs. If Olympic cannot complete excavations and repairs in the time required by Paragraphs 4, 5, and 6 of this Appendix despite reasonable and diligent efforts to do so, Olympic may submit a written request for an extension of time to EPA on or before the original deadline for completing the excavation or repair. After receiving a written request for an extension of time from Olympic pursuant to this Paragraph, EPA shall provide Olympic with a written response in which EPA may, in its discretion, either grant or deny, in whole or in part, the requested extension of time. EPA shall not unreasonably deny a request for an extension of time pursuant to this Paragraph.

B. Reporting Requirements

8. ILI Repair Reports. In addition to the Progress Reports required pursuant to Paragraph 12 of the Consent Decree, within 30 days after the end of each calendar quarter, Olympic shall submit to EPA and the Independent Monitoring Contractor (1) all Analyzed ILI Data received during the quarter; (2) all photographs required by Paragraphs 9 and 10 of this Appendix taken during the quarter; and (3) an ILI Repair Report that describes the evaluation and repair of anomalies required by Paragraphs 4-6

United States Department of Justice
Post Office Box 7611
Washington, D.C. 20044-7611
Telephone: 202-305-0300

of this Appendix during the quarter. Additionally, for each anomaly that Olympic excavates or investigates in any way, the ILI Repair Report shall state:

a. Olympic's Anomaly Designation number and Mile Post Calculation;

b. the date of the ILI inspection;

c. the identity of the ILI vendor and a description of the ILI tool used;

d. a description of the anomaly as reported in the Analyzed ILI Data;

e. the date that Olympic or its agents excavated and evaluated the anomaly;

f. a summary of Olympic's findings from each evaluation including:

1. the depth of gouges and grooves as a function of nominal wall thickness;

2. the depth of dents as a percentage of pipe diameter;

3. whether or not the dent affected pipe curvature or a seam or girth weld and, if so, how;

4. whether or not the dent with the most injurious defect identified at a location contained a scratch, gouge, or groove;

i. the length of the scratch, gouge, and groove; and

ii. the depth of the scratch, gouge, and groove at its deepest point;

5. measurements and other field observations regarding crack indications; and

6. the extent of corrosion as a function of its length, its circumferential extent around the pipe, and as a percentage of wall thickness loss at the deepest point of corrosion;

g. whether or not the anomaly was repaired or the affected portion of the Pipeline was removed and replaced; and

United States Department of Justice
Post Office Box 7611
Washington, D.C. 20044-7611
Telephone: 202-305-0300

h. a description of any repair, or removal and replacement, of the affected portion of the Pipeline.

The form prescribed as Exhibit 3 to this Appendix is an acceptable way of presenting the information required by this Paragraph. Olympic shall certify, pursuant to Paragraph 13 of the Consent Decree, that the evaluation and disposition of each defect complied with this Appendix, and shall certify the accuracy of the information contained in each ILI Repair Report. Within 10 days after receiving any request from EPA for a copy of any ILI data, Olympic shall submit the requested ILI data to EPA.

9. Photographs. Olympic shall take digital or other color photographs at each excavation or repair required by Paragraphs 4-6 of this Appendix. Olympic shall make reasonable efforts to ensure that each photograph clearly and accurately depicts the subject of the photograph. At a minimum, the photographs of each excavation or repair shall include:

a. at least one photograph of the excavation site after the pipe is uncovered;

b. at least one photograph of each discovered defect or anomaly regardless of whether or not this Consent Decree requires repair;

c. at least one photograph of the exposed pipe at each defect or anomaly location after repairs are completed but before recoating; and

d. at least one photograph of the exposed pipe after recoating.

10. Olympic shall label each photograph required by Paragraph 9 with the date and time of the photograph and with either a task or location designator .

V. THIRD PARTY DAMAGE PREVENTION PROGRAM

11. Olympic shall comply with the Third Party Damage Prevention Program attached to this Appendix as Exhibit 4.

United States Department of Justice
Post Office Box 7611
Washington, D.C. 20044-7611
Telephone: 202-305-0300

12. Required Audits of the Third Party Damage Prevention Program. At intervals not exceeding 15 months, but at least once each calendar year, Olympic shall conduct an audit sufficient to ensure compliance with all provisions of Olympic's Third Party Damage Prevention Program and prepare a written audit report. Within 10 days after the date of each audit report required by this Paragraph, Olympic shall submit a copy of the audit report to EPA and the Independent Monitoring Contractor.

VI. MANAGEMENT OF CHANGE PROGRAM

13. Olympic shall have in force at all times from the Effective Date of this Decree until this Section of Appendix A is terminated pursuant to Section XXII (Termination) of the Consent Decree the Management of Change Process attached to this Appendix as Exhibit 5. Olympic shall comply with applicable processes set forth in Exhibit 5, and shall document such compliance, for any (1) construction or modification to operational facilities on the Pipeline System; (2) activities required by the Third Party Damage Prevention Program attached to this Appendix as Exhibit 4; (3) activities required by the Equipment Inspection, Maintenance, and Repair Program attached to this Appendix as Exhibit 6; (4) activities required by the Controller and Employee Overview Training Program attached to this Appendix as Exhibit 7; and (5) activities required by Section IV (Inspection for Defects in Piping and Repairs) of this Appendix. Olympic shall prepare the documentation required by this Paragraph no later than 30 days after the change under consideration is adopted and, within 10 days after receiving any request from EPA or the Independent Monitoring Contractor for a copy of any such documentation, Olympic shall submit the requested documents to EPA or the Independent Monitoring Contractor.

14. Required Audits of the Management of Change Program. At intervals not exceeding 15 months, but at least once each calendar year, Olympic shall conduct an audit sufficient

United States Department of Justice
Post Office Box 7611
Washington, D.C. 20044-7611
Telephone: 202-305-0300

to ensure compliance with Olympic's Management of Change Process and prepare a written audit report. Within 10 days after the date of each audit report required by this Paragraph, Olympic shall submit a copy of the audit report to EPA and the Independent Monitoring Contractor.

VII. EQUIPMENT INSPECTION, MAINTENANCE, AND REPAIR PROGRAM

15. Olympic shall comply with the Equipment Inspection, Maintenance, and Repair Program attached to this Appendix as Exhibit 6.

16. Required Audits of the Equipment Inspection, Maintenance, and Repair Program. At intervals not exceeding 15 months, but at least once each calendar year, Olympic shall conduct an audit sufficient to ensure compliance with all provisions of Olympic's Equipment Inspection, Maintenance, and Repair Program and prepare a written audit report. Within 10 days after the date of each audit report required by this Paragraph, Olympic shall submit a copy of the audit report to EPA and the Independent Monitoring Contractor.

VIII. CONTROLLER AND EMPLOYEE OVERVIEW TRAINING PROGRAM

17. Olympic shall comply with the Controller and Employee Overview Training Program attached to this Appendix as Exhibit 7.

18. Required Audits of the Controller and Employee Overview Training Program. At intervals not exceeding 15 months, but at least once each calendar year, Olympic shall conduct an audit sufficient to ensure compliance with all provisions of Olympic's Controller and Employee Overview Training Program and prepare a written audit report. Within 10 days after the date of each audit report required by this Paragraph, Olympic shall submit a copy of the audit report to EPA and the Independent Monitoring Contractor.

United States Department of Justice
Post Office Box 7611
Washington, D.C. 20044-7611
Telephone: 202-305-0300

IX. INDEPENDENT MONITORING CONTRACTOR

19. Within 30 days of the Effective Date of the Consent Decree, Olympic shall initiate the procedure in Section X of this Appendix to select, and contract with, an Independent Monitoring Contractor (IMC) to perform the duties described in Paragraph 22 of this Appendix.

20. Olympic shall cooperate fully with the IMC and shall provide the IMC with access to all records, employees, contractors, and the physical Pipeline System that the IMC or EPA, in their unreviewable discretion, deem appropriate to effectively perform the IMC's duties described in Paragraph 22 of this Appendix.

21. Qualifications. The IMC shall have one or more registered professional engineers experienced in:

    a. the use of ILI technology;

    b. pipeline repair and maintenance;

    c. monitoring third party construction near pipelines;

    d. surveying and the placement and content of pipeline markers; and

    e. operation of systems similar to Olympic's SCADA system during normal and abnormal operations.

22. Duties of the Independent Monitoring Contractor. The Independent Monitoring Contractor shall perform the following duties:

    a. review the reports required by this Consent Decree and any other documents that will help the Independent Monitoring Contractor verify compliance with this Appendix;

    b. review and verify audits conducted by Olympic as required by this Appendix, as requested by EPA;

United States Department of Justice
Post Office Box 7611
Washington, D.C. 20044-7611
Telephone: 202-305-0300

c. conduct each calendar year up to four physical site visits lasting up to 5 days for each visit, in the unreviewable discretion of the Independent Monitoring Contractor or at the request of EPA, including employee or contractor interviews, record review, and inspections and observations of any activities if deemed appropriate, to assess whether or not Olympic is complying with this Appendix;

d. confer on request by either Olympic or EPA, after the party contacting the Independent Monitoring Contractor provides the other party a reasonable opportunity to participate in the conference, to discuss implementation of this Appendix and to assist in dispute resolution;

e. investigate concerns regarding potential noncompliance with this Appendix as requested by EPA;

f. immediately notify Olympic of problems that may affect compliance with this Appendix, and if the problems are not resolved within ten days after the Independent Monitoring Contractor notifies Olympic, notify EPA and Olympic of the problems, and summarize those problems in a report to EPA and Olympic that includes recommendations regarding how Olympic can resolve those problems;

g. immediately notify Olympic and EPA of any circumstance that may constitute noncompliance with this Appendix and summarize those circumstances in a report to EPA and Olympic that includes recommendations regarding how Olympic can again achieve compliance; and

h. prepare any reports requested by EPA.

23. Neither Olympic nor the United States shall be bound by the recommendations of the Independent Monitoring Contractor.

United States Department of Justice
Post Office Box 7611
Washington, D.C. 20044-7611
Telephone: 202-305-0300

X. PROCEDURE FOR SELECTING, CONTRACTING WITH, AND REPLACING THE INDEPENDENT MONITORING CONTRACTOR

24. Qualifications and Background. The Independent Monitoring Contractor shall have the education and experience required by Paragraph 21 of this Appendix. The Independent Monitoring Contractor shall not be:

a. a present employee or contractor of Olympic or BP;

b. a present employee of any contractor of Olympic or BP, or any owner, parent corporation, subsidiary, or predecessor corporation of Olympic or BP; or

c. an Olympic contractor, or employee of such contractor, hired to implement any provision of this Appendix other than the provisions of Section IX (Independent Monitoring Contractor).

25. Selection Procedure. The Independent Monitoring Contractor shall be selected pursuant to the procedures described below.

a. Within 30 days from the Effective Date of this Consent Decree or 30 days from the date that the parties agree on the need for a replacement consultant pursuant to Paragraph 27 of this Appendix, or a final decision affirming the need for a replacement consultant is rendered pursuant to the dispute resolution procedures in Section XIII (Dispute Resolution) of the Consent Decree, Olympic shall submit to EPA a letter providing (1) the names of at least three proposed independent consultants who are willing to serve; (2) a resume or curriculum vitae of each individual who would perform the required work; (3) the terms of payment for each consultant's services; and (4) a description of any current or past financial relationship between each proposed consultant, and the consultant's employees who will perform the required work, and Olympic, BP, or the related entities

United States Department of Justice
Post Office Box 7611
Washington, D.C. 20044-7611
Telephone: 202-305-0300

specified in Paragraph 24 of this Appendix, which Olympic shall certify as accurate. After receiving such information, EPA shall submit a letter to Olympic that either accepts one of the consultants or rejects all of them. If the letter from EPA accepts one of the consultants, Olympic shall contract with the consultant to perform the required work in accordance with the procedure in Paragraph 26 of this Appendix.

b. If EPA rejects all of Olympic's proposed consultants, EPA shall then submit to Olympic a letter providing (1) the names of at least three proposed independent consultants who are willing to serve; (2) a resume or curriculum vitae of each of consultants' personnel who would perform the required work; and (3) a description of any current or past financial relationship related to this case between each proposed consultant and the United States. Olympic then shall have 30 days from the date of such letter to submit to EPA a letter accepting one of the three proposed consultants or rejecting all of them. If Olympic accepts one of the three consultants proposed by EPA, Olympic shall contract with the consultant to perform the required work in accordance with the procedure in Paragraph 26 of this Appendix. If Olympic rejects all of the consultants proposed by EPA, EPA then may select one of the six consultants proposed by Olympic and EPA to perform the required work and notify Olympic in writing of the consultant selected. Within 30 days of the date of EPA's written notification of the consultant selected, Olympic shall either enter into a contract with the consultant to perform the required work in accordance with the procedure in Paragraph 26 of this Appendix or invoke the dispute resolution procedures in Section XIII (Dispute Resolution) of the Consent Decree.

United States Department of Justice
Post Office Box 7611
Washington, D.C. 20044-7611
Telephone: 202-305-0300

26. Contracting Procedure. Within 30 days of the date of a letter from EPA or Olympic, or a final decision pursuant to the dispute resolution procedures in Section XIII (Dispute Resolution) of the Consent Decree, designating the Independent Monitoring Contractor, Olympic shall draft, and submit to EPA for approval, a proposed contract obligating the Independent Monitoring Contractor to perform the duties described in Paragraph 26 of this Appendix. Within 15 days after the date of any letter from EPA notifying Olympic of any needed revisions to the contract with the Independent Monitoring Contractor, Olympic shall incorporate the revisions and submit the revised contract to EPA for approval. Within 30 days of the date of EPA's written approval of the contract, Olympic shall enter into the contract with the Independent Monitoring Contractor, and submit a copy of the executed contract to the United States.

27. Replacement Procedure. If the Independent Monitoring Contractor becomes unable or unwilling to perform or complete the required work, or for other good cause, Olympic and EPA shall confer in good faith regarding whether or not Olympic and EPA need to select a replacement Independent Monitoring Contractor. If Olympic and EPA agree on the need to select a replacement Independent Monitoring Contractor, Olympic and EPA shall select the replacement Independent Monitoring Contractor in accordance with the selection procedures in Paragraph 25 of this Appendix. If Olympic and EPA do not agree on the need to select a replacement Independent Monitoring Contractor, either Olympic or EPA may invoke the dispute resolution procedures in Section XIII (Dispute Resolution) of the Consent Decree. The inability or unwillingness of the Independent Monitoring Contractor to perform its duties shall not result in an extension of the duration of the terms and provisions of this Appendix or of the Consent Decree.

United States Department of Justice
Post Office Box 7611
Washington, D.C. 20044-7611
Telephone: 202-305-0300

XI. FORMS

28. Where this Appendix requires the use of specified forms, samples of which are attached to this Appendix. Olympic may use different forms, including electronic forms, containing the same information.

XII. EXHIBITS

29. The following exhibits are attached to, and incorporated into this Appendix:

"Exhibit 1" is ASME B31.4-2002.

"Exhibit 2" is ASME B31G-1991.

"Exhibit 3" is Olympic's Form of ILI Repair Report.

"Exhibit 4" is Olympic's Third Party Damage Prevention Program.

"Exhibit 5" is Olympic's Management of Change Process.

"Exhibit 6" is Olympic's Equipment Inspection, Maintenance, and Repair Program.

"Exhibit 7" is Olympic's Controller and Employee Overview Training Program.

United States Department of Justice
Post Office Box 7611
Washington, D.C. 20044-7611
Telephone: 202-305-0300

The American Society of Mechanical Engineers

AN AMERICAN NATIONAL STANDARD

PIPELINE TRANSPORTATION SYSTEMS FOR LIQUID HYDROCARBONS AND OTHER LIQUIDS

ASME CODE FOR PRESSURE PIPING, B31

ASME B31.4-2002

(Revision of ASME B31.4-1998)

Date of Issuance: October 4, 2002
Mandatory Date: April 4, 2003

The next Edition of this Code is scheduled for publication in 2005. There will be no addenda issued to this edition.

ASME issues written replies to inquiries concerning interpretations of technical aspects of the Code. Interpretations are published on the ASME Web site under the Committee Pages at http://www.asme.org/codes/ as they are issued.

The user of the Code will note that metric equivalents of U.S. Customary units appear in many places in this Code. The values stated in U.S. Customary units are to be regarded as the standard, unless otherwise agreed between the contracting parties.

ASME is the registered trademark of The American Society of Mechanical Engineers.

This code or standard was developed under procedures accredited as meeting the criteria for American National Standards. The Standards Committee that approved the code or standard was balanced to assure that individuals from competent and concerned interests have had an opportunity to participate. The proposed code or standard was made available for public review and comment which provides an opportunity for additional public input from industry, academia, regulatory agencies, and the public-at-large.

ASME does not "approve," "rate," or "endorse" any item, construction, proprietary device, or activity.

ASME does not take any position with respect to the validity of any patent rights asserted in connection with any items mentioned in this document, and does not undertake to insure anyone utilizing a standard against liability for infringement of any applicable Letters Patent, nor assume any such liability. Users of a code or standard are expressly advised that determination of the validity of any such patent rights, and the risk of infringement of such rights, is entirely their own responsibility.

Participation by federal agency representative(s) or person(s) affiliated with industry is not to be interpreted as government or industry endorsement of this code or standard.

ASME accepts responsibility for only those interpretations issued in accordance with governing ASME procedures and policies which preclude the issuance of interpretations by individual volunteers.

No part of this document may be reproduced in any form,
in an electronic retrieval system or otherwise,
without the prior written permission of the publisher.

The American Society of Mechanical Engineers
Three Park Avenue, New York, NY 10016-5990

Copyright © 2002 by
THE AMERICAN SOCIETY OF MECHANICAL ENGINEERS
All Rights Reserved
Printed in U.S.A.

CONTENTS

Foreword x
Personnel xii
Introduction xvi
Summary of Changes xviii

Chapter I **Scope and Definitions**
400 General Statements 1
400.1 Scope 1
400.2 Definitions 2

Figures
400.1.1 Diagram Showing Scope of ASME B31.4 Excluding Carbon Dioxide Pipeline Systems (See Fig. 400.1.2) 3
400.1.2 Diagram Showing Scope of ASME B31.4 for Carbon Dioxide Pipeline Systems 4

Chapter II **Design**
Part 1 **Conditions and Criteria** 8
401 Design Conditions 8
401.1 General 8
401.2 Pressure 8
401.3 Temperature 8
401.4 Ambient Influences 8
401.5 Dynamic Effects 8
401.6 Weight Effects 8
401.7 Thermal Expansion and Contraction Loads 9
401.8 Relative Movement of Connected Components 9
402 Design Criteria 9
402.1 General 9
402.2 Pressure-Temperature Ratings for Piping Components 9
402.3 Allowable Stresses and Other Stress Limits 9
402.4 Allowances 13
402.5 Fracture Propagation in Carbon Dioxide Pipelines 13
Part 2 **Pressure Design of Piping Components** 13
403 Criteria for Pressure Design of Piping Components 13
404 Pressure Design of Components 13
404.1 Straight Pipe 13
404.2 Curved Segments of Pipe 15
404.3 Intersections 15
404.5 Pressure Design of Flanges 23
404.6 Reducers 23
404.7 Pressure Design of Other Pressure Containing Components 23

Part 3 **Design Applications of Piping Components Selection and Limitations** 24

Chapter II	**Design (Cont'd)**	
405	Pipe	24
405.2	Metallic Pipe	24
406	Fittings, Elbows, Bends, and Intersections	24
406.1	Fittings	24
406.2	Bends, Miters, and Elbows	24
406.3	Couplings	25
406.4	Reductions	25
406.5	Intersections	25
406.6	Closures	25
407	Valves	25
407.1	General	25
407.8	Special Valves	26
408	Flanges, Facings, Gaskets, and Bolting	26
408.1	Flanges	26
408.3	Flange Facings	26
408.4	Gaskets	26
408.5	Bolting	26
409	Used Piping Components and Equipment	27
Part 4	**Selection and Limitation of Piping Joints**	27
411	Welded Joints	27
411.2	Butt Welds	27
412	Flanged Joints	27
412.1	General	27
414	Threaded Joints	27
414.1	General	27
418	Sleeve, Coupled, and Other Patented Joints	27
418.1	General	27
Part 5	**Expansion, Flexibility, Structural Attachments, Supports, and Restraints**	28
419	Expansion and Flexibility	28
419.1	General	28
419.5	Flexibility	28
419.6	Properties	28
419.7	Analysis	29
420	Loads on Pipe Supporting Elements	29
420.1	General	29
421	Design of Pipe Supporting Elements	29
421.1	Supports, Braces, and Anchors	29
Part 6	**Auxiliary and Other Specific Piping**	32
422	Design Requirements	32
422.3	Instrument and Other Auxiliary Liquid Petroleum or Liquid Anhydrous Ammonia Piping	32
422.6	Pressure Disposal Piping	32
Figures		
404.3.1(b)(3)	Reinforced Extruded Outlets	16
404.3.1(c)(1)	Welding Details for Openings With Complete Encirclement Types of Reinforcement	18
404.3.1(c)(2)	Welding Details for Openings With Localized Type Reinforcement	19

Chapter II	**Design (Cont'd)**	
404.3.1(c)(3)	Welding Details for Openings Without Reinforcement Other Than That in Header and Branch Walls	20
404.3.1(d)(2)	Reinforcement of Branch Connections	22
419.6.4(c)	Flexibility Factor *k* and Stress Intensification Factor *i*	30
Tables		
402.3.1(a)	Tabulation of Examples of Allowable Stresses for Reference Use in Piping Systems Within the Scope of This Code	11
402.4.3	Weld Joint Factor *E*	14
404.3.1(c)	Design Criteria for Welded Branch Connections	20
Chapter III	**Materials**	
423	Materials — General Requirements	34
423.1	Acceptable Materials and Specifications	34
423.2	Limitations on Materials	34
425	Materials Applied to Miscellaneous Parts	34
425.3	Gaskets	34
425.4	Bolting	34
Table		
423.1	Material Standards	35
Chapter IV	**Dimensional Requirements**	
426	Dimensional Requirements for Standard and Nonstandard Piping Components	37
426.1	Standard Piping Components	37
426.2	Nonstandard Piping Components	37
426.3	Threads	37
Table		
426.1	Dimensional Standards	38
Chapter V	**Construction, Welding, and Assembly**	
434	Construction	40
434.1	General	40
434.2	Inspection	40
434.3	Right of Way	40
434.4	Handling, Hauling, Stringing, and Storing	40
434.5	Damage to Fabricated Items and Pipe	40
434.6	Ditching	40
434.7	Bends, Miters, and Elbows	40
434.8	Welding	41
434.9	Tie-In	46
434.10	Installation of Pipe in the Ditch	46
434.11	Backfilling	46
434.12	Restoration of Right of Way and Cleanup	46
434.13	Special Crossings	46
434.14	Inland Coastal Water Construction	47
434.15	Block and Isolating Valves	47
434.16	Connections to Main Lines	48
434.17	Scraper Traps	48
434.18	Line Markers	48
434.19	Corrosion Control	48

Chapter V **Construction, Welding, and Assembly (Cont'd)**

434.20 Pump Station, Tank Farm, and Terminal Construction 48
434.21 Storage and Working Tankage 49
434.22 Electrical Installations 50
434.23 Liquid Metering 50
434.24 Liquid Strainers and Filters 50
435 Assembly of Piping Components 50
435.1 General 50
435.2 Bolting Procedure 51
435.3 Pumping Unit Piping 51
435.4 Manifolds 51
435.5 Auxiliary Liquid Petroleum, Carbon Dioxide, Liquid Anhydrous Ammonia, or Liquid Alcohol Piping 51

Figures

434.8.6(a)-(1) Acceptable Butt Welded Joint Design for Equal Wall Thicknesses 43
434.8.6(a)-(2) Acceptable Butt Welded Joint Design for Unequal Wall Thicknesses 44
434.8.6(b) Recommended Attachment Details of Flanges 45

Table

434.6(a) Minimum Cover for Buried Pipelines 41

Chapter VI **Inspection and Testing**

436 Inspection 52
436.1 General 52
436.2 Qualification of Inspectors 52
436.5 Type and Extent of Examination Required 52
436.6 Repair of Defects 53
437 Testing 53
437.1 General 53
437.4 Test Pressure 53
437.6 Qualification Tests 54
437.7 Records 55

Chapter VII **Operation and Maintenance Procedures**

450 Operation and Maintenance Procedures Affecting the Safety of Liquid Transportation Piping Systems 56
450.1 General 56
450.2 Operation and Maintenance Plans and Procedures 56
451 Pipeline Operation and Maintenance 57
451.1 Operating Pressure 57
451.2 Communications 57
451.3 Line Markers and Signs 57
451.4 Right of Way Maintenance 57
451.5 Patrolling 57
451.6 Pipeline Repairs 57
451.7 Derating a Pipeline to a Lower Operating Pressure 61
451.8 Valve Maintenance 61
451.9 Railroads and Highways Crossing Existing Pipelines 61
451.10 Inland Waters Platform Risers 62
452 Pump Station, Terminal, and Tank Farm Operation and Maintenance 62
452.1 General 62
452.2 Controls and Protective Equipment 62

Chapter VII **Operation and Maintenance Procedures (Cont'd)**

452.3 Storage Vessels 62
452.4 Storage of Combustible Materials 62
452.5 Fencing 62
452.6 Signs 62
452.7 Prevention of Accidental Ignition 62
453 Corrosion Control 63
454 Emergency Plan 63
455 Records 63
456 Qualifying a Piping System for a Higher Operating Pressure 64
457 Abandoning a Piping System 64

Figure
451.6.2(a)(7) Parameters Used in Analysis of the Strength of Corroded Areas 59

Chapter VIII **Corrosion Control**

460 General 65
461 External Corrosion Control for Buried or Submerged Pipelines 65
461.1 New Installations 65
461.2 Existing Piping Systems 67
461.3 Monitoring 67
462 Internal Corrosion Control 68
462.1 New Installations 68
462.2 Existing Piping Systems 68
462.3 Monitoring 68
463 External Corrosion Control for Piping Exposed to Atmosphere 69
463.1 New Installations 69
463.2 Existing Piping Systems 69
463.3 Monitoring 69
464 Corrective Measures 69
465 Records 69

Chapter IX **Offshore Liquid Pipeline Systems**

A400 General Statememts 70
A400.1 Scope 70
A400.2 Definitions 70
A401 Design Conditions 71
A401.1 General 71
A401.9 Installation Design Considerations 71
A401.10 Operational Design Considerations 72
A401.11 Hydrostatic Test Design Considerations 73
A401.12 Route Selection Considerations 73
A402 Design Criteria 74
A402.3 Allowable Stresses and Other Stress Limits 74
A402.4 Allowances 78
A404 Pressure Design of Components 78
A404.1 Straight Pipe 78
A404.3 Intersections 78
A405 Pipe 78
A405.2 Metallic Pipe 78
A405.3 Flexible Pipe 79
A406 Fittings, Elbows, Bends, and Intersections 79

A406.2	Bends, Miters, and Elbows	79
A406.4	Reductions	79
A406.6	Closures	79
A407	Valves	79
A407.1	General	79
A408	Flanges, Facings, Gaskets, and Bolting	79
A408.1	Flanges	79
A408.3	Flange Facings	79
A409	Used Piping Components and Equipment	79
A410	Other Design Considerations	79
A410.1	Pigs and Internal Inspection Tools	79
A410.2	Special Components	79
A414	Threaded Joints	79
A414.1	General	79
A419	Expansion and Flexibility	79
A421	Design of Pipe-Supporting Elements	80
A423	Materials — General Requirements	80
A423.1	Acceptable Materials and Specifications	80
A423.2	Limitations on Materials	80
A434	Construction	80
A434.2	Inspection	80
A434.3	Right-of-Way	80
A434.4	Handling, Hauling, Stringing, and Storing	80
A434.6	Ditching	80
A434.7	Bends, Miters, and Elbows	80
A434.8	Welding	80
A434.11	Backfilling	81
A434.13	Special Crossings	81
A434.14	Offshore Pipeline Construction	81
A434.15	Block and Isolating Valves	81
A434.18	Line Markers	82
A436	Inspection	82
A436.2	Qualification of Inspectors	82
A436.5	Type and Extent of Examination Required	82
A437	Testing	82
A437.1	General	82
A437.4	Test Pressure	82
A437.6	Qualification Tests	82
A437.7	Records	82
A450	Operation and Maintenance Procedures Affecting the Safety of Liquid Transportation Piping Systems	82
A450.2	Operation and Maintenance Plans and Procedures	82
A451	Pipeline Operation and Maintenance	83
A451.3	Markers	83
A451.4	Right-of-Way Maintenance	83
A451.5	Patrolling	83
A451.6	Pipeline Repairs	83
A451.7	Derating a Pipeline to a Lower Operating Pressure	83
A451.8	Valve Maintenance	83
A451.9	Railroads and Highways Crossing Existing Pipelines	84

Chapter IX **Offshore Liquid Pipeline Systems (Cont'd)**

A451.10 Offshore Pipeline Risers 84
A451.11 Inspection 84
A452 Offshore Platform, Pump Station, Terminal, and Tank Farm Operation and Maintenance 84
A452.5 Fencing 84
A452.7 Prevention of Accidental Ignition 84
A454 Emergency Plan 84
A460 General 84
A461 External Corrosion Control for Offshore Submerged Pipelines 84
A461.1 New Installations 84
A461.3 Monitoring 85
A463 External Corrosion Control for Offshore Piping Systems Exposed to Atmospheric Conditions 86
A463.1 New Installations 86

Table
A402.3.5(a) Design Factors for Offshore Pipeline Systems 75

Appendices
A Referenced Standards 87
B Submittal of Technical Inquiries to the B31 Pressure Piping Committee 90

Index 92

FOREWORD

The need for a national code for pressure piping became increasingly evident from 1915 to 1925. To meet this need the American Engineering Standards Committee (later changed to the American Standards Association) initiated Project B31 in March 1926 at the request of The American Society of Mechanical Engineers, and with that society as sole sponsor. After several years' work by Sectional Committee B31 and its subcommittees, a first edition was published in 1935 as an American Tentative Standard Code for Pressure Piping.

A revision of the original tentative standard was begun in 1937. Several more years' effort was given to securing uniformity between sections and to eliminating divergent requirements and discrepancies, as well as to keeping the code abreast of current developments in welding technique, stress computations, and references to new dimensional and material standards. During this period a new section was added on refrigeration piping, prepared in cooperation with The American Society of Refrigeration Engineers and complementing the American Standard Code for Mechanical Refrigeration. This work culminated in the 1942 American Standard Code for Pressure Piping.

Supplements 1 and 2 of the 1942 code, which appeared in 1944 and 1947, respectively, introduced new dimensional and material standards, a new formula for pipe wall thickness, and more comprehensive requirements for instrument and control piping. Shortly after the 1942 code was issued, procedures were established for handling inquiries that require explanation or interpretation of code requirements, and for publishing such inquiries and answers in *Mechanical Engineering* for the information of all concerned.

Continuing increases in the severity of service conditions, with concurrent developments of new materials and designs equal to meeting these higher requirements, had pointed to the need by 1948 for more extensive changes in the code than could be provided by supplements alone. The decision was reached by the American Standards Association and the sponsor to reorganize the Sectional Committee and its several subcommittees, and to invite the various interested bodies to reaffirm their representatives or to designate new ones. Following its reorganization, Sectional Committee B31 made an intensive review of the 1942 code, and a revised code was approved and published in February 1951 with the designation ASA B31.1-1951, which included:

(a) a general revision and extension of requirements to agree with practices current at the time;

(b) revision of references to existing dimensional standards and material specifications, and the addition of references to new ones; and

(c) clarification of ambiguous or conflicting requirements.

Supplement No. 1 to B31.1 was approved and published in 1953 as ASA B31.1a-1953. This Supplement and other approved revisions were included in a new edition of B31.1 published in 1955 with the designation ASA B31.1-1955.

A review by B31 Executive and Sectional Committees in 1955 resulted in a decision to develop and publish industry sections as separate code documents of the American Standard B31 Code for Pressure Piping. ASA B31.4-1959 was the first separate code document for Oil Transportation Piping Systems and superseded that part of Section 3 of the B31.1-1955 code covering Oil Transportation Piping Systems. In 1966 B31.4 was revised to expand coverage on welding, inspection, and testing, and to add new chapters covering construction requirements and operation and maintenance procedures affecting the safety of the piping systems. This revision was published with the designation USAS B31.4-1966, Liquid Petroleum Transportation Piping Systems, since the American Standards Association was reconstituted as the United States of America Standards Institute in 1966.

The United States of America Standards Institute, Inc., changed its name, effective October 6, 1969, to the American National Standards Institute, Inc., and USAS B31.4-1966 was redesignated as ANSI B31.4-1966. The B31 Sectional Committee was redesignated as American National Standards Committee B31 Code for Pressure Piping, and, because of the wide field involved, more than 40 different engineering societies, government bureaus, trade associations, institutes, and the like had one or more representatives on Standards

Committee B31, plus a few "Individual Members" to represent general interests. Code activities were subdivided according to the scope of the several sections, and general direction of Code activities rested with Standards Committee B31 officers and an Executive Committee whose membership consisted principally of Standards Committee officers and chairmen of the Section and Technical Specialists Committees.

The ANSI B31.4-1966 Code was revised and published in 1971 with the designation ANSI B31.4-1971.

The ANSI B31.4-1971 Code was revised and published in 1974 with the designation ANSI B31.4-1974.

In December 1978, American National Standards Committee B31 was converted to an ASME Committee with procedures accredited by ANSI. The 1979 revision was approved by ASME and subsequently by ANSI on November 1, 1979, with the designation ANSI/ASME B31.4-1979.

Following publication of the 1979 Edition, the B31.4 Section Committee began work on expanding the scope of the code to cover requirements for the transportation of liquid alcohols. References to existing dimensional standards and material specifications were revised, and new references were added. Other clarifying and editorial revisions were made in order to improve the text. These revisions led to the publication of two addenda to B31.4. Addenda "b" to B31.4 was approved and published in 1981 as ANSI/ASME B31.4b-1981. Addenda "c" to B31.4 was approved and published in 1986 as ANSI/ASME B31.4c-1986.

The 1986 Edition of B31.4 was an inclusion of the two previously published addenda into the 1979 Edition.

Following publication of the 1986 Edition, clarifying and editorial revisions were made to improve the text. Additionally, references to existing standards and material specifications were revised, and new references were added. These revisions led to the publication of an addenda to B31.4, which was approved and published in 1987 as ASME/ANSI B31.4a-1987.

The 1989 Edition of B31.4 was an inclusion of the previously published addenda into the 1986 Edition.

Following publication of the 1989 Edition, clarifying revisions were made to improve the text. Additionally, references to existing standards and material specifications were revised and updated. These revisions led to the publication of an addenda to B31.4, which was approved and published in 1991 as ASME B31.4a-1991.

The 1992 Edition of B31.4 was an inclusion of the previously published addenda into the 1989 Edition and a revision to valve maintenance. The 1992 Edition was approved by the American National Standards Institute on December 15, 1992, and designated as ASME B31.4-1992 Edition.

The 1998 Edition of B31.4 was an inclusion of the previously published addenda into the 1992 Edition. Also included in this Edition were other revisions and the addition of Chapter IX, Offshore Liquid Pipeline Systems. The 1998 Edition was approved by the American National Standards Institute on November 11, 1998, and designated as ASME B31.4-1998 Edition.

The 2002 Edition of B31.4 is an inclusion of the previously published addenda into the 1998 Edition along with revisions to the maintenance section and updated references. This 2002 Edition was approved by the American National Standards Institute on August 5, 2002, and designated as ASME B31.4-2002.

ASME CODE FOR PRESSURE PIPING, B31

OFFICERS

L. E. Hayden, Jr., *Chair*
B. P. Holbrook, *Vice Chair*
P. D. Stumpf, *Secretary*

COMMITTEE PERSONNEL

H. A. Ainsworth, Consultant
R. J. Appleby, Exxon Mobile Upstream Res. Co.
A. E. Beyer, Bechtel Corp.
K. C. Bodenhamer, Williams Energy Services
J. D. Byers, Mobile E & P Technology
J. S. Chin, ANR Pipeline Co.
D. M. Fox, Texas Utilities-Pipeline Services
J. W. Frey, Reliant Energy Co.
D. R. Frikken, Solutia, Inc.
P. H. Gardner, Consultant
R. R. Hoffmann, Federal Energy Regulatory Commission
G. A. Jolly, Edward Vogt Valve Co.
J. M. Kelly, Willbros Engineers, Inc.
W. J. Koves, UOP LLC
K. K. Kyser, Frick York International
J. E. Meyer, Middough Association, Inc.
E. Michalopoulos, General Engineering and Commercial Co.
T. J. O'Grady II, Veco Alaska, Inc.
R. G. Payne, ABB-Combustion Engineering
P. Pertuit III, Black Mesa Pipeline, Inc.
J. T. Powers, Parsons Energy & Chemicals
E. H. Rinaca, Virginia Power Co.
M. J. Rosenfeld, Kiefner & Associates, Inc.
R. J. Silvia, Process Engineers and Constructors, Inc.
W. J. Sperko, Sperko Engineering Services, Inc.
G. W. Spohn III, Coleman Spohn Corp.
R. W. Straiton, Consultant
A. L. Watkins, The Perry Nuclear Power Plant
R. B. West, State of Iowa, Div. of Labor Services
P. A. Bourquin, *Ex-Officio Member*, Consultant
P. D. Flenner, *Ex-Officio Member*, Consumers Energy Co.
R. W. Haupt, *Ex-Officio Member*, Pressure Piping Engineering Associates, Inc.
W. B. McGehee, *Ex-Officio Member*, Consultant
A. D. Nance, *Ex-Officio Member*, A. D. Nance Associates, Inc.
W. V. Richards, *Ex-Officio Member*, Consultant

B31.4/11 LIQUID AND SLURRY PIPING TRANSPORTATION SYSTEMS SECTION COMMITTEE

K. C. Bodenhamer, *Chair*, Williams Energy Services

T. J. O'Grady II, *Vice Chair*, Veco Alaska, Inc.
P. Pertuit III, *Vice Chair*, Black Mesa Pipeline, Inc.
G. E. Moino, *Secretary*, The American Society of Mechanical Engineers
R. S. Barfield, Barfield Engineers, Inc.
L. C. Bennington, Milepost Consulting Services, Inc.
A. E. Beyer, Bechtel Corp.
E. E. Cavanagh, Mustang Engineering, Inc.
J. A. Cox, Lieberman Consulting
R. D. Deaver, Deatech Consulting Co.
E. P. Hagan, Teppco
D. B. Kadakia, TD Williamson, Inc.
J. F. Kiefner, Kiefner & Associates, Inc.
R. D. Lewis, H. Rosen USA, Inc.
A. L MacDonald, Consultant
M. H. Matheson, American Petroleum Institute
J. D. Miller, Equilon Enterprises
W. M. Olson, Gulf Interstate Engineering Co.
S. R. Peterson, Lakehead Pipe Line Co.
J. T. Powers, Parsons Energy & Chemicals
L. J. Schmitz, Phillips Pipe Line Co.
B. C. Shah, Conoco
R. N. Tennille, Pipeline & Terminal Engineering Consultants
R. D. Turley, Marathon Ashland Petroleum, LLC
D. R. Turner, Williams Energy Group
L. W. Ulrich, US Department of Transportation
M. D. Weston, Bechtel Corp.
T. A. Wicklund, Amoco Pipeline Co.
J. E. Zimmerhanzel, Consultant
C. Zimmerman, National Transportation Safety Board

B31 ADMINISTRATIVE COMMITTEE

L. E. Hayden, Jr., *Chair*, Victaulic Co. of America
B. P. Holbrook, *Vice Chair*, D. B. Riley, Inc.
P. D. Stumpf, *Secretary*, The American Society of Mechanical Engineers
K. C. Bodenhamer, Williams Energy Services
J. D. Byers, Mobil E & P Tech
P. D. Flenner, Consumers Energy Co.
D. M. Fox, Texas Utilities-Pipeline Services
D. R. Frikken, Solutia, Inc.
P. H. Gardner, Consultant
R. R. Hoffmann, Federal Energy Regulatory Commission
G. A. Jolly, Edward Vogt Valve Co.
E. Michalopoulos, General Engineering and Commercial Co.
A. D. Nance, A. D. Nance Associates, Inc.
R. G. Payne, ABB-Combustion Engineering
G. W. Spohn III, Coleman Spohn Corp.
R. B. West, State of Iowa, Div. of Labor Services
P. A. Bourquin, *Ex-Officio Member*, Consultant
R. W. Haupt, *Ex-Officio Member*, Pressure Piping Engineering Associates, Inc.
W. B. McGehee, *Ex-Officio Member*, Consultant
W. V. Richards, *Ex-Officio Member*, Consultant

B31 FABRICATION AND EXAMINATION COMMITTEE

P. D. Flenner, *Chair*, Consumers Energy Co.
P. Stumpf, *Secretary*, The American Society of Mechancial Engineers
J. P. Ellenberger, WFI International, Inc.
D. J. Fetzner, Arco Alaska, Inc.
E. Michalopoulos, General Engineering and Commercial Co.
W. G. Scruggs, E.I. du Pont de Nemours & Co.

R. I. Seals, Consultant
R. J. Silvia, Process Engineering & Constructors, Inc.
W. J. Sperko, Sperko Engineering Services, Inc.
E. F. Summers, Jr., Babcock & Wilcox

B31 MATERIALS TECHNICAL COMMITTEE

M. L. Nayyar, *Chair*, Bechtel Power Corp.
M. R. Argenziano, *Secretary*, The American Society of Mechancical Engineers
M. H. Barnes, Sebesta Blomberg & Associates
R. P. Deubler, Shaw Group/Fronek Co.
C. L. Henley, Black & Veatch
D. W. Rahoi, CCM 2000
R. A. Schmidt, Trinity-Ladish

B31 MECHANICAL DESIGN TECHNICAL COMMITTEE

R. W. Haupt, *Chair*, Pressure Piping Engineering Associates, Inc.
S. J. Rossi, *Secretary*, The American Society of Mechancical Engineers
G. A. Antaki, Westinghouse Savannah River Site
C. Becht IV, Becht Engineering Co.
J. P. Breen, Pressure Sciences, Inc.
J. P. Ellenberger, WFI International, Inc.
D. J. Fetzner, Arco Alaska, Inc
J. A. Graziano, Tennessee Valley Authority
J. D. Hart, SSD, Inc.
B. P. Holbrook, D. B. Riley, Inc
W. J. Koves, UOP LLC
G. Mayers, Naval Sea Systems Comm.
T. Q. McCawley, Consultant
E. Michalopoulos, General Engineering and Commercial Co.
J. C. Minichielio, J. C. Minichielio Consulting, Inc.
A. D. Nance, A. D. Nance Associates, Inc.
T. J. O'Grady II, Veco Alaska, Inc.
A. W. Paulin, Paulin Research Group
P. S. Rampone, Hart Design Group
R. A. Robleto, Kellogg Brown & Root
M. J. Rosenfeld, Kiefner & Associates, Inc.
G. Stevick, Berkeley Engineering & Research, Inc.
Q. N. Truong, Kellogg Brown & Root, Inc.
E. A. Wais, Wais and Associates, Inc.
G. E. Woods, Brown & Root
E. C. Rodabaugh, *Honorary Member*, Consultant

B31 CONFERENCE GROUP

T. A. Bell, Pipeline Safety Engineer
G. Bynog, Texas Department of Labor and Standards
R. A. Coomes, State of Kentucky, Department of Housing/Boiler Section
J. W. Greenawalt, Jr., Oklahoma Department of Labor
D. H. Hanrath, North Carolina Department of Labor
C. J. Harvey, Alabama Public Service Commission
D. T. Jagger, Ohio Department of Commerce
M. Kotb, Regie du Batiment du Quebec
K. T. Lau, Alberta Boilers Safety Association
R. G. Marini, New Hampshire Public Utilities Commission
L. W. Mault, Manitoba Department of Labour
A. W. Meiring, Fire and Building Boiler and Pressure Vessel Division
R. F. Mullaney, Boiler and Pressure Vessel Safety Branch
W. A. Owen, North Dakota Public Service Commission

P. Sher, State of Connecticut
M. E. Skarda, State of Arkansas, Department of Labor
D. A. Starr, Nebraska Department of Labor
D. J. Stursma, Iowa Utilities Board
R. P. Sullivan, The National Board of Boiler and Pressure Vessel Inspectors
J. E. Troppman, Division of Labor/State of Colorado Boiler Inspections
C. H. Walters, National Board of Boiler and Pressure Vessel Inspectors
W. A. West, ACI Central
T. F. Wickham, Rhode Island Department of Labor

B31 NATIONAL INTEREST REVIEW GROUP

American Pipe Fitting Association — H. Thielsch
American Society of Heating, Refrigeration and Air Conditioning Engineers — H. R. Kornblum
Chemical Manufacturers Association — D. R. Frikken
Copper Development Association — A. Cohen
Ductile Iron Pipe Research Association — T. F. Stroud
Edison Electric Institute — R. L. Williams
International District Heating Association — G. M. Von Bargen
Manufacturers Standardization Society of the Valve and Fittings Industry — R. A. Schmidt
National Association of Plumbing-Heating-Cooling Contractors — R. E. White
National Certified Pipe Welding Bureau — J. Hansmann
National Fire Protection Association — T. C. Lemoff
National Fluid Power Association — H. G. Anderson
Valve Manufacturers Association — R. A. Handschumacher

INTRODUCTION

The ASME B31 Code for Pressure Piping consists of a number of individually published Sections, each an American National Standard. Hereafter, in this Introduction and in the text of this Code Section B31.4, where the word "Code" is used without specific identification, it means this Code Section.

The Code sets forth engineering requirements deemed necessary for safe design and construction of pressure piping. While safety is the basic consideration, this factor alone will not necessarily govern the final specifications for any piping system. The designer is cautioned that the Code is not a design handbook; it does not do away with the need for the designer or for competent engineering judgment.

To the greatest possible extent, Code requirements for design are stated in terms of basic design principles and formulas. These are supplemented as necessary with specific requirements to assure uniform application of principles and to guide selection and application of piping elements. The Code prohibits designs and practices known to be unsafe and contains warnings where caution, but not prohibition, is warranted.

This Code Section includes:

(a) references to acceptable material specifications and component standards, including dimensional requirements and pressure-temperature ratings;

(b) requirements for design of components and assemblies, including pipe supports;

(c) requirements and data for evaluation and limitation of stresses, reactions, and movements associated with pressure, temperature changes, and other forces;

(d) guidance and limitations on the selection and application of materials, components, and joining methods;

(e) requirements for the fabrication, assembly, and erection of piping;

(f) requirements for examination, inspection, and testing of piping;

(g) procedures for operation and maintenance that are essential to public safety; and

(h) provisions for protecting pipelines from external corrosion and internal corrosion/erosion.

It is intended that this Edition of Code Section B31.4 and any subsequent Addenda not be retroactive. Unless agreement is specifically made between contracting parties to use another issue, or the regulatory body having jurisdiction imposes the use of another issue, the latest Edition and Addenda issued at least 6 months prior to the original contract date for the first phase of activity covering a piping system or systems shall be the governing document for all design, materials, fabrication, erection, examination, and testing for the piping until the completion of the work and initial operation.

Users of this Code are cautioned against making use of Code revisions without assurance that they are acceptable to the proper authorities in the jurisdiction where the piping is to be installed.

Code users will note that paragraphs in the Code are not necessarily numbered consecutively. Such discontinuities result from following a common outline, insofar as practicable, for all Code Sections. In this way, corresponding material is correspondingly numbered in most Code Sections, thus facilitating reference by those who have occasion to use more than one Section.

The Code is under the direction of ASME Committee B31, Code for Pressure Piping, which is organized and operates under procedures of The American Society of Mechanical Engineers which have been accredited by the American National Standards Institute. The Committee is a continuing one and keeps all Code Sections current with new developments in materials, construction, and industrial practice. Addenda are issued periodically. New editions are published at intervals of 3 to 5 years.

When no Section of the ASME Code for Pressure Piping specifically covers a piping system, at his discretion the user may select any Section determined to be generally applicable. However, it is cautioned that supplementary requirements to the Section chosen may be necessary to provide for a safe piping system for the intended application. Technical limitations of the various Sections, legal requirements, and possible applicability of other codes or standards are some of the factors to be considered by the user in determining the applicability of any Section of this Code.

The Committee has established an orderly procedure to consider requests for interpretation and revision of

Code requirements. To receive consideration, inquiries must be in writing and must give full particulars (see Mandatory Appendix covering preparation of technical inquiries).

The approved reply to an inquiry will be sent directly to the inquirer. In addition, the question and reply will be published as part of an Interpretation Supplement issued to the applicable Code Section.

A Case is the prescribed form of reply to an inquiry when study indicates that the Code wording needs clarification or when the reply modifies existing requirements of the Code or grants permission to use new materials or alternative constructions. Proposed Cases are published in *Mechanical Engineering* for public review. In addition, the Case will be published on the B31.4 web site at http://www.asme.org/codes/.

A Case is normally issued for a limited period, after which it may be renewed, incorporated in the Code, or allowed to expire if there is no indication of further need for the requirements covered by the Case. However, the provisions of a Case may be used after its expiration or withdrawal, providing the Case was effective on the original contract date or was adopted before completion of the work, and the contracting parties agree to its use.

Materials are listed in the stress tables only when sufficient usage in piping within the scope of the Code has been shown. Materials may be covered by a Case. Requests for listing shall include evidence of satisfactory usage and specific data to permit establishment of allowable stresses, maximum and minimum temperature limits, and other restrictions. Additional criteria can be found in the guidelines for addition of new materials in the ASME Boiler and Pressure Vessel Code, Section II and Section VIII, Division 1, Appendix B. (To develop usage and gain experience, unlisted materials may be used in accordance with para. 423.1.)

Requests for interpretation and suggestions for revision should be addressed to the Secretary, ASME B31 Committee, Three Park Avenue, New York, NY 10016

SUMMARY OF CHANGES

Changes given below are identified on the pages by a margin note, **02**, placed next to the affected area.

Page	*Location*	*Change*
xi	Foreword	(1) Next-to-last paragraph revised (2) New last paragraph added
2	400.2	(1) Definition for *blunt imperfection* added (2) Footnote 2 added
10	402.3.2	Subparagraph (e) added
41–46	434.8	Revised in its entirety
47	434.13.4	Subparagraph (c) revised
48	434.18	Revised in its entirety
57	451.3	Revised in its entirety
58, 59	451.6.2	(1) Subparagraph (a)(1) revised (2) Subparagraph (a)(2)(d) added (3) Subparagraphs (b)(2)(a) and (b)(3) revised
61	451.6.3	Subparagraph (b) revised
	451.9	Subparagraph (a) revised
92	Index	Welding qualification records entry revised to to reflect revision of para. 434.8.3

NOTE:

(1) The Interpretations to ASME B31.4 issued between January 1, 2001, and December 31, 2001, follow the last page of this Edition as a separate supplement, Interpretations No. 7.

CHAPTER I

SCOPE AND DEFINITIONS

400 GENERAL STATEMENTS

(a) This Liquid Transportation Systems Code is one of several sections of the ASME Code for Pressure Piping, B31. This Section is published as a separate document for convenience. This Code applies to hydrocarbons, liquid petroleum gas, anhydrous ammonia, alcohols, and carbon dioxide. Throughout this Code these systems will be referred to as Liquid Pipeline Systems.

(b) The requirements of this Code are adequate for safety under conditions normally encountered in the operation of liquid pipeline systems. Requirements for all abnormal or unusual conditions are not specifically provided for, nor are all details of engineering and construction prescribed. All work performed within the Scope of this Code shall comply with the safety standards expressed or implied.

(c) The primary purpose of this Code is to establish requirements for safe design, construction, inspection, testing, operation, and maintenance of liquid pipeline systems for protection of the general public and operating company personnel as well as for reasonable protection of the piping system against vandalism and accidental damage by others and reasonable protection of the environment.

(d) This Code is concerned with employee safety to the extent that it is affected by basic design, quality of materials and workmanship, and requirements for construction, inspection, testing, operation, and maintenance of liquid pipeline systems. Existing industrial safety regulations pertaining to work areas, safe work practices, and safety devices are not intended to be supplanted by this Code.

(e) The designer is cautioned that the Code is not a design handbook. The Code does not do away with the need for the engineer or competent engineering judgment. The specific design requirements of the Code usually revolve around a simplified engineering approach to a subject. It is intended that a designer capable of applying more complete and rigorous analysis to special or unusual problems shall have latitude in the development of such designs and the evaluation of complex or combined stresses. In such cases the designer is responsible for demonstrating the validity of his approach.

(f) This Code shall not be retroactive or construed as applying to piping systems installed before date of issuance shown on document title page insofar as design, materials, construction, assembly, inspection, and testing are concerned. It is intended, however, that the provisions of this Code shall be applicable within 6 months after date of issuance to the relocation, replacement, and uprating or otherwise changing existing piping systems; and to the operation, maintenance, and corrosion control of new or existing piping systems. After Code revisions are approved by ASME and ANSI, they may be used by agreement between contracting parties beginning with the date of issuance. Revisions become mandatory or minimum requirements for new installations 6 months after date of issuance except for piping installations or components contracted for or under construction prior to the end of the 6 month period.

(g) The users of this Code are advised that in some areas legislation may establish governmental jurisdiction over the subject matter covered by this Code and are cautioned against making use of revisions that are less restrictive than former requirements without having assurance that they have been accepted by the proper authorities in the jurisdiction where the piping is to be installed. The Department of Transportation, United States of America, rules governing the transportation by pipeline in interstate and foreign commerce of petroleum, petroleum products, and liquids such as anhydrous ammonia or carbon dioxide are prescribed under Part 195 — Transportation of Hazardous Liquids by Pipeline, Title 49 — Transportation, Code of Federal Regulations.

400.1 Scope

400.1.1 This Code prescribes requirements for the design, materials, construction, assembly, inspection, and testing of piping transporting liquids such as crude

oil, condensate, natural gasoline, natural gas liquids, liquefied petroleum gas, carbon dioxide, liquid alcohol, liquid anhydrous ammonia, and liquid petroleum products between producers' lease facilities, tank farms, natural gas processing plants, refineries, stations, ammonia plants, terminals (marine, rail, and truck), and other delivery and receiving points. (See Fig. 400.1.1.)

Piping consists of pipe, flanges, bolting, gaskets, valves, relief devices, fittings, and the pressure containing parts of other piping components. It also includes hangers and supports, and other equipment items necessary to prevent overstressing the pressure containing parts. It does not include support structures such as frames of buildings, stanchions, or foundations, or any equipment such as defined in para. 400.1.2(b).

Requirements for offshore pipelines are found in Chapter IX.

Also included within the scope of this Code are:

(a) primary and associated auxiliary liquid petroleum and liquid anhydrous ammonia piping at pipeline terminals (marine, rail, and truck), tank farms, pump stations, pressure reducing stations, and metering stations, including scraper traps, strainers, and prover loops;

(b) storage and working tanks, including pipe-type storage fabricated from pipe and fittings, and piping interconnecting these facilities;

(c) liquid petroleum and liquid anhydrous ammonia piping located on property which has been set aside for such piping within petroleum refinery, natural gasoline, gas processing, ammonia, and bulk plants;

(d) those aspects of operation and maintenance of Liquid Pipeline Systems relating to the safety and protection of the general public, operating company personnel, environment, property, and the piping systems [see paras. 400(c) and (d)].

400.1.2 This Code does not apply to:

(a) auxiliary piping, such as water, air, steam, lubricating oil, gas, and fuel;

(b) pressure vessels, heat exchangers, pumps, meters, and other such equipment including internal piping and connections for piping except as limited by para. 423.2.4(b);

(c) piping designed for internal pressures:

(1) at or below 15 psi (1 bar) gage pressure regardless of temperature;

(2) above 15 psi (1 bar) gage pressure if design temperature is below minus 20°F (−30°C) or above 250°F (120°C);

(d) casing, tubing, or pipe used in oil wells, wellhead assemblies, oil and gas separators, crude oil production tanks, and other producing facilities;

(e) petroleum refinery, natural gasoline, gas processing, ammonia, carbon dioxide processing, and bulk plant piping, except as covered under para. 400.1.1(c);

(f) gas transmission and distribution piping;

(g) the design and fabrication of proprietary items of equipment, apparatus, or instruments, except as limited by para. 423.2.4(b);

(h) ammonia refrigeration piping systems provided for in ASME B31.5, Refrigeration Piping Code;

(i) carbon dioxide gathering and field distribution system.

400.2 Definitions 02

Some of the more common terms relating to piping are defined below.[1]

accidental loads: any unplanned load or combination of unplanned loads caused by human intervention or natural phenomena.

blunt imperfection: an imperfection characterized by smoothly contoured variations in wall thickness.[2]

breakaway coupling: a component installed in the pipeline to allow the pipeline to separate when a predetermined axial load is applied to the coupling.

buckle: a condition where the pipeline has undergone sufficient plastic deformation to cause permanent wrinkling in the pipe wall or excessive cross-sectional deformation caused by loads acting alone or in combination with hydrostatic pressure.

carbon dioxide: a fluid consisting predominantly of carbon dioxide compressed above its critical pressure and, for the purpose of this Code, shall be considered to be a liquid.

cold springing: deliberate deflection of piping, within its yield strength, to compensate for anticipated thermal expansion.

column buckling: buckling of a beam or pipe under compressive axial load in which loads cause unstable lateral deflection, also referred to as upheaval buckling.

connectors: component, except flanges, used for the purpose of mechanically joining two sections of pipe.

[1] Welding terms which agree with AWS Standard A3.0 are marked with an asterisk (*). For welding terms used in this Code but not shown here, definitions in accordance with AWS A3.0 apply.

[2] Sharp imperfections may be rendered blunt by grinding, but the absence of a sharp imperfection must be verified by visual and nondestructive examination.

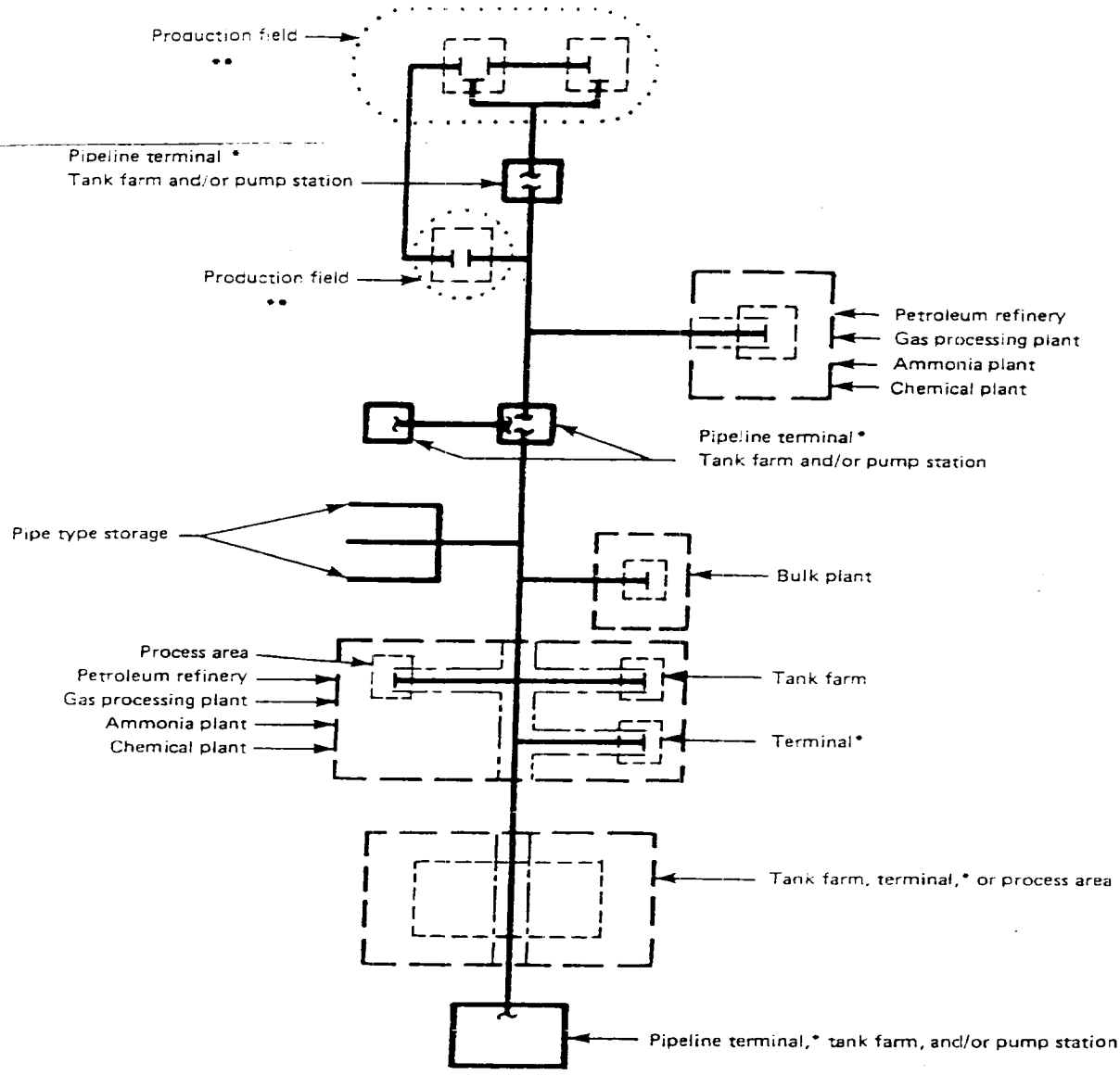

•	Marine, rail, or truck (all loading or unloading)
••	Onshore or offshore
———	Piping within B31.4 scope
———	Continuation of B31.4 scope through area
———	Start or end at B31.4 scope within plot area
- - - - - -	Limits of production lease or field
— — — —	Plot (or platform) limits of production, petroleum refinery, chemical plant, ammonia plant, bulk plant, or gas processing operating facilities
— — —	Corridor within property of petroleum refinery, chemical plant, ammonia plant, or gas processing plant set aside for B31.4 piping
— —	Property line of petroleum refinery, chemical plant, ammonia plant, gas processing plant, or bulk plant

FIG. 400.1.1 DIAGRAM SHOWING SCOPE OF ASME B31.4 EXCLUDING CARBON DIOXIDE PIPELINE SYSTEMS (SEE FIG. 400.1.2)

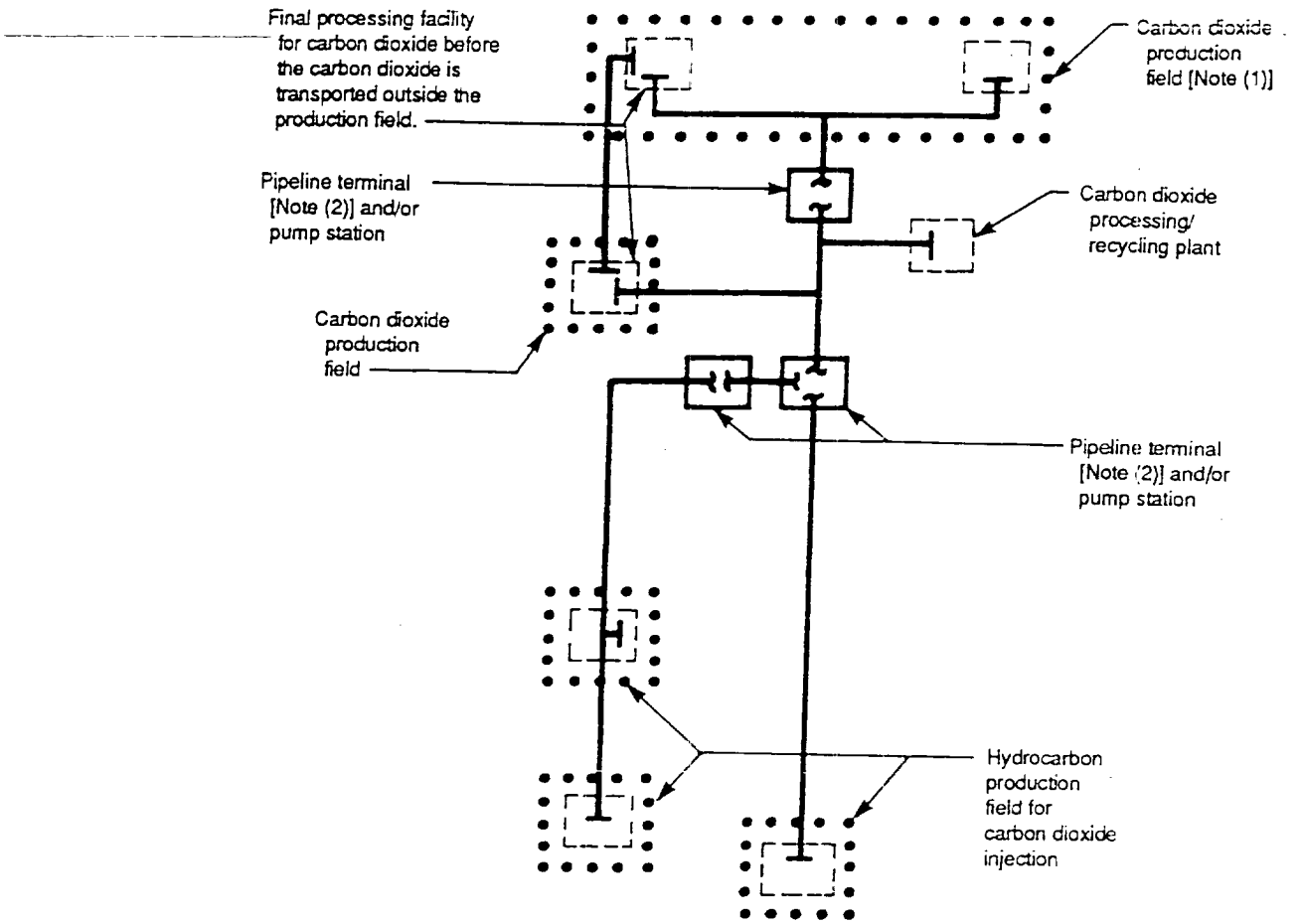

Piping within B31.4 Scope
Continuation of B31.4 Scope through area
Start or end at B31.4 Scope within plot area
Limits of production lease or field
Plot (or platform) limits of production, petroleum refinery, chemical plant, carbon dioxide processing plant, or gas processing operating facilities

NOTES:

(1) Onshore or offshore.

(2) Marine, rail, or truck (all loading or unloading).

FIG. 400.1.2 DIAGRAM SHOWING SCOPE OF ASME B31.4 FOR CARBON DIOXIDE PIPELINE SYSTEMS

defect: an imperfection of sufficient magnitude to warrant rejection.

design life: a period of time used in design calculations, selected for the purpose of verifying that a replaceable or permanent component is suitable for the anticipated period of service. Design life does not pertain to the life of the pipeline system because a properly maintained and protected pipeline system can provide liquid transportation service indefinitely.

engineering design: detailed design developed from operating requirements and conforming to Code requirements, including all necessary drawings and specifications, governing a piping installation.

general corrosion: uniform or gradually varying loss of wall thickness over an area.

girth weld: a complete circumferential butt weld joining pipe or components.

imperfection: a discontinuity or irregularity which is detected by inspection.

internal design pressure: internal pressure used in calculations or analysis for pressure design of a piping component (see para. 401.2.2).

liquefied petroleum gas(es) (LPG): liquid petroleum composed predominantly of the following hydrocarbons, either by themselves or as mixtures: butane (normal butane or isobutane), butylene (including isomers), propane, propylene, and ethane.

liquid alcohol: any of a group of organic compounds containing only hydrogen, carbon, and one or more hydroxyl radicals which will remain liquid in a moving stream in a pipeline.

liquid anhydrous ammonia: a compound formed by the combination of the two gaseous elements, nitrogen and hydrogen, in the proportion of one part of nitrogen to three parts of hydrogen, by volume, compressed to a liquid state.

maximum steady state operating pressure: maximum pressure (sum of static head pressure, pressure required to overcome friction losses, and any back pressure) at any point in a piping system when the system is operating under steady state conditions.

miter: two or more straight sections of pipe matched and joined on a line bisecting the angle of junction so as to produce a change in direction.

nominal pipe size (NPS): see ASME B36.10M p. 1 for definition.

operating company: owner or agent currently responsible for the design, construction, inspection, testing, operation, and maintenance of the piping system.

petroleum: crude oil, condensate, natural gasoline, natural gas liquids, liquefied petroleum gas, and liquid petroleum products.

pipe: a tube, usually cylindrical, used for conveying a fluid or transmitting fluid pressure, normally designated "pipe" in the applicable specification. It also includes any similar component designated as "tubing" used for the same purpose. Types of pipe, according to the method of manufacture, are defined as follows.

(a) electric resistance welded pipe: pipe produced in individual lengths or in continuous lengths from coiled skelp, having a longitudinal or spiral butt joint wherein coalescence is produced by the heat obtained from resistance of the pipe to the flow of electric current in a circuit of which the pipe is a part, and by the application of pressure.

(b) furnace lap welded pipe: pipe having a longitudinal lap joint made by the forge welding process wherein coalescence is produced by heating the preformed tube to welding temperature and passing it over a mandrel located between two welding rolls which compress and weld the overlapping edges.

(c) furnace butt welded pipe

(1) furnace butt welded pipe, bell welded: pipe produced in individual lengths from cut-length skelp, having its longitudinal butt joint forge welded by the mechanical pressure developed in drawing the furnace heated skelp through a cone-shaped die (commonly known as the "welding bell") which serves as a combined forming and welding die.

(2) furnace butt welded pipe, continuous welded: pipe produced in continuous lengths from coiled skelp and subsequently cut into individual lengths, having its longitudinal butt joint forge welded by the mechanical pressure developed in rolling the hot formed skelp through a set of round pass welding rolls.

(d) electric fusion welded pipe: pipe having a longitudinal or spiral butt joint wherein coalescence is produced in the preformed tube by manual or automatic electric arc welding. The weld may be single or double and may be made with or without the use of filler metal. Spiral welded pipe is also made by the electric fusion welded process with either a lap joint or a lock-seam joint.

(e) electric flash welded pipe: pipe having a longitudinal butt joint wherein coalescence is produced simultaneously over the entire area of abutting surfaces by

the heat obtained from resistance to the flow of electric current between the two surfaces, and by the application of pressure after heating is substantially completed. Flashing and upsetting are accompanied by expulsion of metal from the joint.

(f) double submerged arc welded pipe: pipe having a longitudinal or spiral butt joint produced by at least two passes, one of which is on the inside of the pipe. Coalescence is produced by heating with an electric arc or arcs between the bare metal electrode or electrodes and the work. The welding is shielded by a blanket of granular, fusible material on the work. Pressure is not used and filler metal for the inside and outside welds is obtained from the electrode or electrodes.

(g) seamless pipe: pipe produced by piercing a billet followed by rolling or drawing, or both.

(h) electric induction welded pipe: pipe produced in individual lengths or in continuous lengths from coiled skelp having a longitudinal or spiral butt joint wherein coalescence is produced by the heat obtained from resistance of the pipe to induced electric current, and by application of pressure.

pipe nominal wall thickness: the wall thickness listed in applicable pipe specifications or dimensional standards included in this Code by reference. The listed wall thickness dimension is subject to tolerances as given in the specification or standard.

pipe supporting elements: pipe supporting elements consist of fixtures and structural attachments as follows.

(a) fixtures: fixtures include elements which transfer the load from the pipe or structural attachment to the supporting structure or equipment. They include hanging type fixtures such as hanger rods, spring hangers, sway braces, counterweights, turnbuckles, struts, chains, guides and anchors, and bearing type fixtures such as saddles, bases, rollers, brackets, and sliding supports.

(b) structural attachments: structural attachments include elements which are welded, bolted, or clamped to the pipe, such as clips, lugs, rings, clamps, clevises, straps, and skirts.

pressure: unless otherwise stated, pressure is expressed in pounds per square inch (bar) above atmospheric pressure, i.e., gage pressure as abbreviated psig (bar).

shall: "shall" or "shall not" is used to indicate that a provision is mandatory.

should: "should" or "it is recommended" is used to indicate that a provision is not mandatory but recommended as good practice.

soil liquefaction: a soil condition, typically caused by dynamic cyclic loading (e.g., earthquake, waves) where the effective shear strength of the soil is reduced such that the soil exhibits the properties of a liquid.

span: a section of pipe that is unsupported

temperatures: are expressed in degrees Fahrenheit (°F) unless otherwise stated.

weight coating: any coating applied to the pipeline for the purpose of increasing the pipeline specific gravity.

arc welding:* a group of welding processes wherein coalescence is produced by heating with an electric arc or arcs, with or without the application of pressure and with or without the use of filler metal.

automatic welding:* welding with equipment which performs the entire welding operation without constant observation and adjustment of the controls by an operator. The equipment may or may not perform the loading and unloading of the work.

fillet weld:* a weld of approximately triangular cross section joining two surfaces approximately at right angles to each other in a lap joint, tee joint, or corner joint.

full fillet weld:* a fillet weld whose size is equal to the thickness of the thinner member joined.

gas welding:* a group of welding processes wherein coalescence is produced by heating with a gas flame or flames, with or without the application of pressure, and with or without the use of filler metal.

gas metal arc welding:* an arc welding process wherein coalescence is produced by heating with an electric arc between a filler metal (consumable) electrode and the work. Shielding is obtained from a gas, a gas mixture (which may contain an inert gas), or a mixture of a gas and a flux. (This process has sometimes been called Mig welding or CO_2 welding.)

gas tungsten arc welding:* an arc welding process wherein coalescence is produced by heating with an electric arc between a single tungsten (nonconsumable) electrode and the work. Shielding is obtained from a gas or gas mixture (which may contain an inert gas). Pressure may or may not be used and filler metal may or may not be used. (This process has sometimes been called Tig welding.)

semiautomatic arc welding:* arc welding with equipment which controls only the filler metal feed. The advance of the welding is manually controlled.

shielded metal arc welding:* an arc welding process wherein coalescence is produced by heating with an electric arc between a covered metal electrode and the work. Shielding is obtained from decomposition of the electrode covering. Pressure is not used and filler metal is obtained from the electrode.

submerged arc welding:* an arc welding process wherein coalescence is produced by heating with an electric arc or arcs between a bare metal electrode or electrodes and the work. The welding is shielded by a blanket of granular, fusible material on the work. Pressure is not used, and filler metal is obtained from the electrode and sometimes from a supplementary welding rod.

tack weld:* a weld made to hold parts of a weldment in proper alignment until subsequent welds are made

weld:* a localized coalescence of metal wherein coalescence is produced by heating to suitable temperatures, with or without the application of pressure, and with or without the use of filler metal. The filler metal shall have a melting point approximately the same as the base metal.

welder:* one who is capable of performing a manual or semiautomatic welding operation.

welding operator:* one who operates machine or automatic welding equipment.

welding procedures:* the detailed methods and practices including joint welding procedures involved in the production of a weldment.

CHAPTER II
DESIGN

PART 1
CONDITIONS AND CRITERIA

401 DESIGN CONDITIONS

401.1 General

Paragraph 401 defines the pressures, temperatures, and various forces applicable to the design of piping systems within the scope of this Code. It also takes into account considerations that shall be given to ambient and mechanical influences and various loadings.

401.2 Pressure

401.2.2 Internal Design Pressure. The piping component at any point in the piping system shall be designed for an internal design pressure which shall not be less than the maximum steady state operating pressure at that point, or less than the static head pressure at that point with the line in a static condition. The maximum steady state operating pressure shall be the sum of the static head pressure, pressure required to overcome friction losses, and any required back pressure. Credit may be given for hydrostatic external pressure, in the appropriate manner, in modifying the internal design pressure for use in calculations involving the pressure design of piping components (see para. 404.1.3). Pressure rise above maximum steady state operating pressure due to surges and other variations from normal operations is allowed in accordance with para. 402.2.4.

401.2.3 External Design Pressure. The piping component shall be designed to withstand the maximum possible differential between external and internal pressures to which the component will be exposed.

401.3 Temperature

401.3.1 Design Temperature. The design temperature is the metal temperature expected in normal operation. It is not necessary to vary the design stress for metal temperatures between −20°F (−30°C) and 250°F (120°C). However, some of the materials conforming to specifications approved for use under this Code may not have properties suitable for the lower portion of the temperature band covered by this Code. Engineers are cautioned to give attention to the low temperature properties of the materials used for facilities to be exposed to unusually low ground temperatures, low atmospheric temperatures, or transient operating conditions.

401.4 Ambient Influences

401.4.2 Fluid Expansion Effects. Provision shall be made in the design either to withstand or to relieve increased pressure caused by the heating of static fluid in a piping component.

401.5 Dynamic Effects

401.5.1 Impact. Impact forces caused by either external or internal conditions shall be considered in the design of piping systems.

401.5.2 Wind. The effect of wind loading shall be provided for in the design of suspended piping.

401.5.3 Earthquake. Consideration in the design shall be given to piping systems located in regions where earthquakes are known to occur.

401.5.4 Vibration. Stress resulting from vibration or resonance shall be considered and provided for in accordance with sound engineering practice.

401.5.5 Subsidence. Consideration in the design shall be given to piping systems located in regions where subsidence is known to occur.

401.5.6 Waves and Currents. The effects of waves and currents shall be provided for in the design of pipelines across waterways.

401.6 Weight Effects

The following weight effects combined with loads and forces from other causes shall be taken into account in the design of piping that is exposed, suspended, or not supported continuously.

401.6.1 Live Loads. Live loads include the weight of the liquid transported and any other extraneous materials such as ice or snow that adhere to the pipe. The impact of wind, waves, and currents are also considered live loads.

401.6.2 Dead Loads. Dead loads include the weight of the pipe, components, coating, backfill, and unsupported attachments to the piping.

401.7 Thermal Expansion and Contraction Loads

Provisions shall be made for the effects of thermal expansion and contraction in all piping systems.

401.8 Relative Movement of Connected Components

The effect of relative movement of connected components shall be taken into account in design of piping and pipe supporting elements.

402 DESIGN CRITERIA

402.1 General

Paragraph 402 pertains to ratings, stress criteria, design allowances, and minimum design values, and formulates the permissible variations to these factors used in the design of piping systems within the scope of this Code.

The design requirements of this Code are adequate for public safety under conditions usually encountered in piping systems within the scope of this Code, including lines within villages, towns, cities, and industrial areas. However, the design engineer shall provide reasonable protection to prevent damage to the pipeline from unusual external conditions which may be encountered in river crossings, inland coastal water areas, bridges, areas of heavy traffic, long self-supported spans, unstable ground, vibration, weight of special attachments, or forces resulting from abnormal thermal conditions. Some of the protective measures which the design engineer may provide are encasing with steel pipe of larger diameter, adding concrete protective coating, increasing the wall thickness, lowering the line to a greater depth, or indicating the presence of the line with additional markers.

402.2 Pressure-Temperature Ratings for Piping Components

402.2.1 Components Having Specific Ratings. Within the metal temperature limits of −20°F (−30°C) to 250°F (120°C), pressure ratings for components shall conform to those stated for 100°F (40°C) in material standards listed in Table 423.1. The nonmetallic trim, packing, seals, and gaskets shall be made of materials which are not injuriously affected by the fluid in the piping system and shall be capable of withstanding the pressures and temperatures to which they will be subjected in service. Low temperatures due to pressure reduction situations, such as blow downs and other events, shall be considered when designing carbon dioxide pipelines.

402.2.2 Ratings — Components Not Having Specific Ratings. Piping components not having established pressure ratings may be qualified for use as specified in paras. 404.7 and 423.1(b).

402.2.3 Normal Operating Conditions. For normal operation the maximum steady state operating pressure shall not exceed the internal design pressure and pressure ratings for the components used.

402.2.4 Ratings — Allowance for Variations From Normal Operations. Surge pressures in a liquid pipeline are produced by a change in the velocity of the moving stream that results from shutting down of a pump station or pumping unit, closing of a valve, or blockage of the moving stream.

Surge pressure attenuates (decreases in intensity) as it moves away from its point of origin.

Surge calculations shall be made, and adequate controls and protective equipment shall be provided, so that the level of pressure rise due to surges and other variations from normal operations shall not exceed the internal design pressure at any point in the piping system and equipment by more than 10%.

402.2.5 Ratings — Considerations for Different Pressure Conditions. When two lines that operate at different pressure conditions are connected, the valve segregating the two lines shall be rated for the more severe service condition. When a line is connected to a piece of equipment which operates at a higher pressure condition than that of the line, the valve segregating the line from the equipment shall be rated for at least the operating condition of the equipment. The piping between the more severe conditions and the valve shall be designed to withstand the operating conditions of the equipment or piping to which it is connected.

402.3 Allowable Stresses and Other Stress Limits

402.3.1 Allowable Stress Values

(a) The allowable stress value S to be used for

design calculations in para. 404.1.2 for new pipe of known specification shall be established as follows:

$$S = 0.72 \times E \times \text{specified minimum yield strength of the pipe, psi (MPa)}$$

where

0.72 = design factor based on nominal wall thickness. In setting design factor, due consideration has been given to and allowance has been made for the underthickness tolerance and maximum allowable depth of imperfections provided for in the specifications approved by the Code.

E = weld joint factor (see para. 402.4.3 and Table 402.4.3)

Table 402.3.1(a) is a tabulation of examples of allowable stresses for reference use in transportation piping systems within the scope of this Code.

(b) The allowable stress value S to be used for design calculations in para. 404.1.2 for used (reclaimed) pipe of known specification shall be in accordance with (a) above and limitations in para. 405.2.1(b).

(c) The allowable stress value S to be used for design calculations in para. 404.1.2 for new or used (reclaimed) pipe of unknown or ASTM A 120 specification shall be established in accordance with the following and limitations in para. 405.2.1(c).

$S = 0.72 \times E \times$ minimum yield strength of the pipe, psi (MPa) [24,000 psi (165 MPa)] or yield strength determined in accordance with paras. 437.6.6 and 437.6.7]

where

0.72 = design factor based on nominal wall thickness. In setting design factor, due consideration has been given to and allowance has been made for the underthickness tolerance and maximum allowable depth of imperfections provided for in the specifications approved by the Code.

E = weld joint factor (see Table 402.4.3)

(d) The allowable stress value S to be used for design calculations in para. 404.1.2 for pipe which has been cold worked in order to meet the specified minimum yield strength and is subsequently heated to 600°F (300°C) or higher (welding expected) shall be 75% of the applicable allowable stress value as determined by para. 402.3.1(a), (b), or (c).

(e) Allowable stress values in shear shall not exceed 45% of the specified minimum yield strength of the pipe, and allowable stress values in bearing shall not exceed 90% of the specified minimum yield strength of the pipe.

(f) Allowable tensile and compressive stress values for materials used in structural supports and restraints shall not exceed 66% of the specified minimum yield strength. Allowable stress values in shear and bearing shall not exceed 45% and 90% of the specified minimum yield strength, respectively. Steel materials of unknown specifications may be used for structural supports and restraints, provided a yield strength of 24,000 psi (165 MPa) or less is used.

(g) In no case where the Code refers to the specified minimum value of a physical property shall a higher value of the property be used in establishing the allowable stress value.

402.3.2 Limits of Calculated Stresses Due to Sustained Loads and Thermal Expansion 02

(a) Internal Pressure Stresses. The calculated stresses due to internal pressure shall not exceed the applicable allowable stress value S determined by para. 402.3.1 (a), (b), (c), or (d) except as permitted by other subparagraphs of para. 402.3.

(b) External Pressure Stresses. Stresses due to external pressure shall be considered safe when the wall thickness of the piping components meets the requirements of paras. 403 and 404.

(c) Allowable Expansion Stresses. The allowable stress values for the equivalent tensile stress in para. 419.6.4(b) for restrained lines shall not exceed 90% of the specified minimum yield strength of the pipe. The allowable stress range S_A in para. 419.6.4(c) for unrestrained lines shall not exceed 72% of the specified minimum yield strength of the pipe.

(d) Additive Longitudinal Stresses. The sum of the longitudinal stresses due to pressure, weight, and other sustained external loadings [see para. 419.6.4(c)] shall not exceed 75% of the allowable stress value specified for S_A in (c) above.

(e) Effective Stresses. The sum of the circumferential, longitudinal, and radial stresses from internal design pressure and external loads in pipe installed under railroads or highways, as combined in API RP 1102 shall not exceed 0.90 SMYS (specific minimum yield strength). Loads shall include earth load, cyclic rail load, and thermal stresses.

402.3.3 Limits of Calculated Stresses Due to Occasional Loads

(a) Operation. The sum of the longitudinal stresses produced by pressure, live and dead loads, and those

TABLE 402.3.1(a)
TABULATION OF EXAMPLES OF ALLOWABLE STRESSES FOR REFERENCE USE IN PIPING SYSTEMS WITHIN THE SCOPE OF THIS CODE

Specification	Grade	Specified Min. Yield Strength, psi (MPa)	Weld Joint Factor E	Allowable Stress Value S, −20°F to 250°F (−30°C to 120°C), psi (MPa)
Seamless				
API 5L	A25	25,000 (172)	1.00	18,000 (124)
API 5L, ASTM A 53, ASTM A 106	A	30,000 (207)	1.00	21,600 (149)
API 5L, ASTM A 53, ASTM A 106	B	35,000 (241)	1.00	25,200 (174)
API 5L	X42	42,000 (289)	1.00	30,250 (208)
API 5L	X46	46,000 (317)	1.00	33,100 (228)
API 5L	X52	52,000 (358)	1.00	37,450 (258)
API 5L	X56	56,000 (386)	1.00	40,300 (278)
API 5L	X60	60,000 (413)	1.00	43,200 (298)
API 5L	X65	65,000 (448)	1.00	46,800 (323)
API 5L	X70	70,000 (482)	1.00	50,400 (347)
API 5L	X80	80,000 (551)	1.00	57,600 (397)
ASTM A 106	C	40,000 (278)	1.00	28,800 (199)
ASTM A 333	6	35,000 (241)	1.00	25,000 (174)
ASTM A 524	I	35,000 (241)	1.00	25,200 (174)
ASTM A 524	II	30,000 (207)	1.00	21,600 (149)
Furnace Butt Welded, Continuous Welded				
ASTM A 53	...	25,000 (172)	0.60	10,800 (74)
API 5L Classes I and II	A25	25,000 (172)	0.60	10,800 (74)
Electric Resistance Welded and Electric Flash Welded				
API 5L	A25	25,000 (172)	1.00	18,000 (124)
API 5L, ASTM A 53, ASTM A 135	A	30,000 (207)	1.00	21,600 (149)
API 5L, ASTM A 53, ASTM A 135	B	35,000 (241)	1.00	25,200 (174)
API 5L	X42	42,000 (289)	1.00	30,250 (208)
API 5L	X46	46,000 (317)	1.00	33,100 (228)
API 5L	X52	52,000 (358)	1.00	37,450 (258)
API 5L	X56	56,000 (386)	1.00	40,300 (279)
API 5L	X60	60,000 (413)	1.00	43,200 (297)
API 5L	X65	65,000 (448)	1.00	46,300 (323)
API 5L	X70	70,000 (482)	1.00	50,400 (347)
API 5L	X80	80,000 (551)	1.00	57,600 (397)
ASTM A 333	6	35,000 (241)	1.00	25,000 (174)

(continued)

TABLE 402.3.1(a) (CONT'D)
TABULATION OF EXAMPLES OF ALLOWABLE STRESSES FOR REFERENCE USE IN PIPING SYSTEMS WITHIN THE SCOPE OF THIS CODE

Specification	Grade	Specified Min. Yield Strength, psi (MPa)	Weld Joint Factor *E*	Allowable Stress Value *S*, −20°F to 250°F (−30°C to 120°C), psi (MPa)
Electric Fusion Welded				
ASTM A 134	...	...	0.80	...
ASTM A 139	A	30,000 (207)	0.80	17,300 (119)
ASTM A 139	B	35,000 (241)	0.80	20,150 (139)
ASTM A 671	...	Note (1)	1.00 [Notes (2), (3)]	...
ASTM A 671	...	Note (1)	0.70 [Note (4)]	...
ASTM A 672	...	Note (1)	1.00 [Notes (2), (3)]	...
ASTM A 672	...	Note (1)	0.80 [Note (4)]	...
Submerged Arc Welded				
API 5L	A	30,000 (207)	1.00	21,600 (149)
API 5L	B	35,000 (241)	1.00	25,200 (174)
API 5L	X42	42,000 (289)	1.00	30,250 (208)
API 5L	X46	46,000 (317)	1.00	33,100 (228)
API 5L	X52	52,000 (358)	1.00	37,450 (258)
API 5L	X56	56,000 (386)	1.00	40,300 (278)
API 5L	X60	60,000 (413)	1.00	43,200 (298)
API 5L	X65	65,000 (448)	1.00	46,800 (323)
API 5L	X70	70,000 (482)	1.00	50,400 (347)
API 5L	X80	80,000 (551)	1.00	57,600 (397)
ASTM A 381	Y35	35,000 (241)	1.00	25,200 (174)
ASTM A 381	Y42	42,000 (290)	1.00	30,250 (209)
ASTM A 381	Y46	46,000 (317)	1.00	33,100 (228)
ASTM A 381	Y48	48,000 (331)	1.00	34,550 (238)
ASTM A 381	Y50	50,000 (345)	1.00	36,000 (248)
ASTM A 381	Y52	52,000 (358)	1.00	37,450 (258)
ASTM A 381	Y60	60,000 (413)	1.00	43,200 (298)
ASTM A 381	Y65	65,000 (448)	1.00	46,800 (323)

GENERAL NOTES:

(a) Allowable stress values *S* shown in this Table are equal to 0.72*E* (weld joint factor) × specified minimum yield strength of the pipe.

(b) Allowable stress values shown are for new pipe of known specification. Allowable stress values for new pipe of unknown specification, ASTM A 120 specification, or used (reclaimed) pipe shall be determined in accordance with para. 402.3.1.

(c) For some Code computations, particularly with regard to branch connections [see para. 404.3.1(d)(3)] and expansion, flexibility, structural attachments, supports, and restraints (Chapter II, Part 5), the weld joint factor *E* need not be considered.

(d) For specified minimum yield strength of other grades in approved specifications, refer to that particular specification.

(e) Allowable stress value for cold worked pipe subsequently heated to 600°F (300°C) or higher (welding excepted) shall be 75% of the value listed in Table.

(f) Definitions for the various types of pipe are given in para. 400.2.

(g) Metric stress levels are given in MPa (1 megapascal = 1 million pascals).

NOTES:

(1) See applicable plate specification for yield point and refer to para. 402.3.1 for calculation of *S*.

(2) Factor applies for Classes 12, 22, 32, 42, and 52 only.

(3) Radiography must be performed after heat treatment.

(4) Factor applies for Classes 13, 23, 33, 43, and 53 only.

produced by occasional loads, such as wind or earthquake, shall not exceed 80% of the specified minimum yield strength of the pipe. It is not necessary to consider wind and earthquake as occurring concurrently.

(b) Test. Stresses due to test conditions are not subject to the limitations of para. 402.3. It is not necessary to consider other occasional loads, such as wind and earthquake, as occurring concurrently with the live, dead, and test loads existing at the time of test.

402.4 Allowances

402.4.1 Corrosion. A wall thickness allowance for corrosion is not required if pipe and components are protected against corrosion in accordance with the requirements and procedures prescribed in Chapter VIII.

402.4.2 Threading and Grooving. An allowance for thread or groove depth in inches (mm) shall be included in A of the equation under para. 404.1.1 when threaded or grooved pipe is allowed by this Code (see para. 414).

402.4.3 Weld Joint Factors. Longitudinal or spiral weld joint factors E for various types of pipe are listed in Table 402.4.3.

402.4.5 Wall Thickness and Defect Tolerances. Wall thickness tolerances and defect tolerances for pipe shall be as specified in applicable pipe specifications or dimensional standards included in this Code by reference in Appendix A.

402.5 Fracture Propagation in Carbon Dioxide Pipelines

402.5.1 Design Considerations. The possibility of brittle and ductile propagating fractures shall be considered in the design of carbon dioxide pipelines. The design engineer shall provide reasonable protection to limit the occurrence and the length of fractures throughout the pipeline with special consideration at river crossings, road crossings, and other appropriate areas or intervals.

402.5.2 Brittle Fractures. Brittle fracture propagation shall be prevented by selection of a pipe steel which fractures in a ductile manner at operating temperatures. API 5L supplementary requirements or similar specifications shall be used for testing requirements to ensure the proper pipe steel selection.

402.5.3 Ductile Fractures. Ductile fracture propagation shall be minimized by the selection of a pipe steel with appropriate fracture toughness and/or by the installation of suitable fracture arrestors. Design consideration shall include pipe diameter, wall thickness, fracture toughness, yield strength, operating pressure, operating temperature, and the decompression characteristics of carbon dioxide and its associated impurities.

PART 2
PRESSURE DESIGN OF PIPING COMPONENTS

403 CRITERIA FOR PRESSURE DESIGN OF PIPING COMPONENTS

The design of piping components, considering the effects of pressure, shall be in accordance with para. 404. In addition, the design shall provide for dynamic and weight effects included in para. 401 and design criteria in para. 402.

404 PRESSURE DESIGN OF COMPONENTS

404.1 Straight Pipe

404.1.1 General

(a) The *nominal* wall thickness of straight sections of steel pipe shall be equal to or greater than t_n determined in accordance with the following equation.

$$t_n = t + A$$

(b) The notations described below are used in the equations for the pressure design for straight pipe.

t_n = nominal wall thickness satisfying requirements for pressure and allowances

t = pressure design wall thickness as calculated in inches (mm) in accordance with para. 404.1.2 for internal pressure. As noted under para. 402.3.1 or para. A402.3.5, as applicable, in setting design factor, due consideration has been given to and allowance has been made for the underthickness tolerance and maximum allowable depth of imperfections provided for in the specifications approved by the Code.

A = sum of allowances for threading and grooving as required under para. 402.4.2, corrosion as required under para. 402.4.1, and increase in wall thickness if used as protective measure under para. 402.1.

P_i = internal design gage pressure (see para. 401.2.2), psi (bar)

D = outside diameter of pipe, in. (mm)

TABLE 402.4.3
WELD JOINT FACTOR E

Specification No.	Pipe Type [Note (1)]	Weld Joint Factor E
ASTM A 53	Seamless	1.00
	Electric resistance welded	1.00
	Furnace butt welded	0.60
ASTM A 106	Seamless	1.00
ASTM A 134	Electric fusion (arc) welded	0.80
ASTM A 135	Electric resistance welded	1.00
ASTM A 139	Electric fusion (arc) welded	0.80
ASTM A 333	Seamless	1.00
	Electric resistance weld	1.00
ASTM A 381	Double submerged arc welded	1.00
ASTM A 671	Electric fusion welded	1.00 [Notes (2), (3)] 0.80 [Note (4)]
ASTM A 672	Electric fusion welded	1.00 [Notes (2), (3)] 0.80 [Note (4)]
API 5L	Seamless	1.00
	Electric resistance welded	1.00
	Electric induction welded	1.00
	Submerged arc welded	1.00
	Furnace butt welded, continuous welded	0.60
Known	Known	Note (5)
Unknown	Seamless	1.00 [Note (6)]
Unknown	Electric resistance welded	1.00 [Note (6)]
Unknown	Electric Fusion welded	0.80 [Note (6)]
Unknown	Over NPS 4	0.80 [Note (7)]
Unknown	NPS 4 and smaller	0.60 [Note (8)]

NOTES:
(1) Definitions for the various pipe types (weld joints) are given in para. 400.2.
(2) Factor applies for Classes 12, 22, 32, 42, and 52 only.
(3) Radiography must be performed after heat treatment.
(4) Factor applies for Classes 13, 23, 33, 43, and 53 only.
(5) Factors shown above apply for new or used (reclaimed) pipe if pipe specification and pipe type are known.
(6) Factor applies for new or used pipe of unknown specification and ASTM A 120 if type of weld joint is known.
(7) Factor applies for new or used pipe of unknown specification and ASTM A 120 or for pipe over NPS 4 if type of joint is unknown.
(8) Factor applies for new or used pipe of unknown specification and ASTM A 120 or for pipe NPS 4 and smaller if type of joint is unknown.

S = applicable allowable stress value, psi (MPa), in accordance with para. 402.3.1(a), (b), (c), or (d)

404.1.2 Straight Pipe Under Internal Pressure. The internal pressure design wall thickness t of steel pipe shall be calculated by the following equation.

$$t = \frac{P_i D}{2S} \qquad \left(t = \frac{P_i D}{20S} \right)$$

404.1.3 Straight Pipe Under External Pressure. Pipelines within the scope of this Code may be subject to conditions during construction and operation where

the external pressure exceeds the internal pressure (vacuum within the pipe or pressure outside the pipe when submerged). The pipe wall selected shall provide adequate strength to prevent collapse, taking into consideration mechanical properties, variations in wall thickness permitted by material specifications, ellipticity (out-of-roundness), bending stresses, and external loads (see para. 401.2.2).

404.2 Curved Segments of Pipe

Changes in direction may be made by bending the pipe in accordance with para. 406.2.1 or installing factory made bends or elbows, in accordance with para. 406.2.3.

404.2.1 Pipe Bends. The wall thickness of pipe before bending shall be determined as for straight pipe in accordance with para. 404.1. Bends shall meet the flattening limitations of para. 434.7.1.

404.2.2 Elbows

(a) The minimum metal thickness of flanged or threaded elbows shall not be less than specified for the pressures and temperatures in the applicable American National Standard or the MSS Standard Practice.

(b) Steel butt welding elbows shall comply with ASME B16.9, ASME B16.28, or MSS SP-75 and shall have pressure and temperature ratings based on the same stress values as were used in establishing the pressure and temperature limitations for pipe of the same or equivalent materials.

404.3 Intersections

404.3.1 Branch Connections. Branch connections may be made by means of tees, crosses, integrally reinforced extruded outlet headers, or welded connections, and shall be designed in accordance with the following requirements.

(a) Tees and Crosses

(1) The minimum metal thickness of flanged or threaded tees and crosses shall not be less than specified for the pressures and temperatures in the applicable American National Standard or the MSS Standard Practice.

(2) Steel butt welding tees and crosses shall comply with ASME B16.9 or MSS SP-75 and shall have pressure and temperature ratings based on the same stress values as were used in establishing the pressure and temperature limitations for pipe of the same or equivalent material.

(3) Steel butt welding tees and crosses may be used for all ratios of branch diameter to header diameter and all ratios of design hoop stress to specified minimum yield strength of the adjoining header and branch pipe, provided they comply with (2) above.

(b) Integrally Reinforced Extruded Outlet Headers

(1) Integrally reinforced extruded outlet headers may be used for all ratios of branch diameter to header diameter and all ratios of design hoop stress to specified minimum yield strength of the joining header and branch pipe, provided they comply with (2) through (8) immediately following.

(2) When the design meets the limitations on geometry contained herein, the rules established are valid and meet the intent of the Code. These rules cover minimum requirements and are selected to assure satisfactory performance of extruded headers subjected to pressure. In addition, however, forces and moments are usually applied to the branch by such agencies as thermal expansion and contraction, by vibration, by dead weight of piping, valves and fittings, covering and contents, and by earth settlement. Consideration shall be given to the design of extruded header to withstand these forces and moments.

(3) Definition

(a) An *extruded outlet header* is defined as a header in which the extruded lip at the outlet has a height above the surface of the header which is equal to or greater than the radius of curvature of the external contoured portion of the outlet, i.e., $h_o \geq r_o$. See nomenclature and Fig. 404.3.1(b)(3).

(b) These rules do not apply to any nozzle in which additional nonintegral material is applied in the form of rings, pads, or saddles.

(c) These rules apply only to cases where the axis of the outlet intersects and is perpendicular to the axis of the header.

(4) Notation. The notation used herein is illustrated in Fig. 404.3.1(b)(3). All dimensions are in inches (mm).

d = outside diameter of branch pipe
d_c = internal diameter of branch pipe
D = outside diameter of header
D_c = internal diameter of header
D_o = internal diameter of extruded outlet measured at the level of the outside surface of header
h_o = height of the extruded lip. This must be equal to or greater than r_o except as shown in (4)(b) below.
L = height of the reinforcement zone
$= 0.7\sqrt{dT_o}$
t_b = required thickness of the branch pipe according to the wall thickness equation in para. 404.1.2

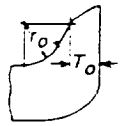

Sketch to show method of establishing T_o when the taper encroaches on the crotch radius

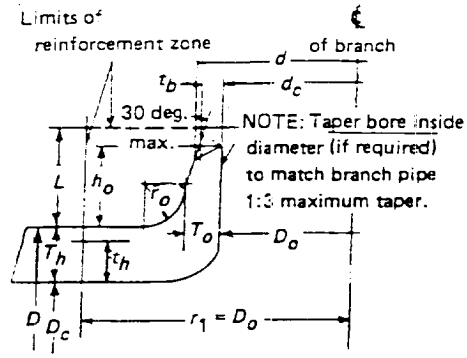

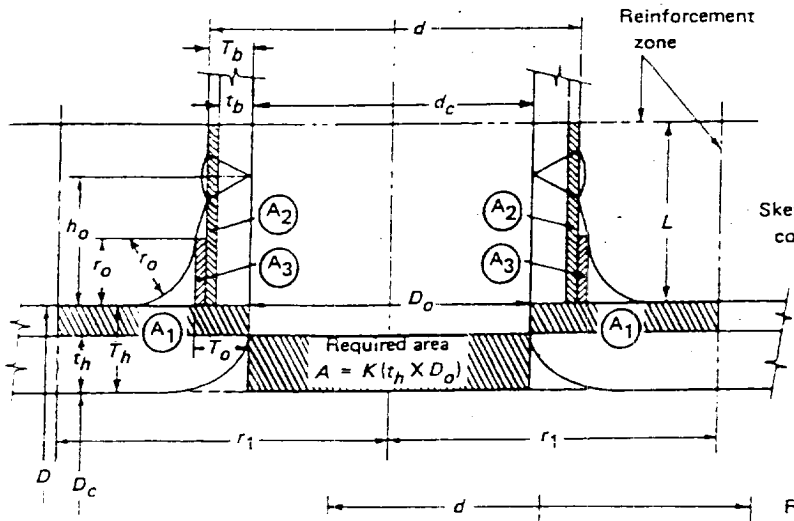

Sketch is drawn for condition where $K = 1.00$

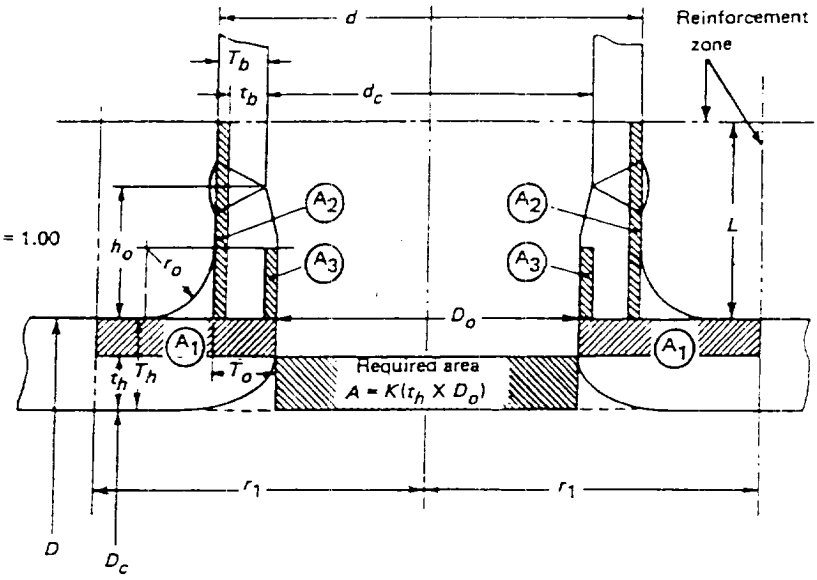

Sketch is drawn for condition where $K = 1.00$

FIG. 404.3.1(b)(3) REINFORCED EXTRUDED OUTLETS

T_b = actual nominal wall thickness of branch
t_h = required thickness of the header according to the wall thickness equation in para. 404.1.2
T_h = actual nominal wall thickness of header
T_o = finished thickness of extruded outlet measured at a height equal to r_o above the outside surface of the header
r_1 = half-width of reinforcement zone (equal to D_o)
r_o = radius of curvature of external contoured portion of outlet measured in the plane containing the axes of the header and branch. This is subject to the following limitations.

(a) Minimum Radius. This dimension shall not be less than $0.05d$, except that on branch diameters larger than NPS 30 it need not exceed 1.50 in. (38 mm).

(b) Maximum Radius. For outlet pipe sizes NPS 8 and larger, this dimension shall not exceed $0.10d + 0.50$ in. (13 mm). For outlet pipe sizes less than NPS 8, this dimension shall not be greater than 1.25 in. (32 mm).

(c) When the external contour contains more than one radius, the radius of any arc sector of approximately 45 deg. shall meet the requirements of (a) and (b) above.

(d) Machining shall not be employed in order to meet the above requirements.

(5) Required Area. The required area is defined as $A = K(t_h D_o)$, where K shall be taken as follows:

(a) for d/D greater than 0.60, $K = 1.00$;

(b) for d/D greater than 0.15 and not exceeding 0.60, $K = 0.6 + \frac{2}{3}d/D$;

(c) for d/D equal to or less than 0.15, $K = 0.70$.

The design must meet the criteria that the reinforcement area defined in (6) below is not less than the required area.

(6) Reinforcement Area. The reinforcement area shall be the sum of areas $A_1 + A_2 + A_3$ as defined below.

(a) Area A_1. The area lying within the reinforcement zone resulting from any excess thickness available in the header wall, i.e.,

$$A_1 = D_o (T_h - t_h)$$

(b) Area A_2. The area lying within the reinforcement zone resulting from any excess thickness available in the branch pipe wall, i.e.,

$$A_2 = 2L (T_b - t_b)$$

(c) Area A_3. The area lying within the reinforcement zone resulting from excess thickness available in the extruded outlet lip, i.e.,

$$A_3 = 2r_o (T_o - T_b)$$

(7) Reinforcement of Multiple Openings. The requirements outlined in para. 404.3.1(e) shall be followed, except that the required area and reinforcement shall be as given in (5) and (6) above.

(8) The manufacturer shall be responsible for establishing and marking on the section containing extruded outlets, the design pressure and temperature, "Established under provisions of ASME B31.4," and the manufacturer's name or trademark.

(c) Welded Branch Connections. Welded branch connections shall be as shown in Figs. 404.3.1(c)(1), 404.3.1(c)(2), and 404.3.1(c)(3). Design shall meet the minimum requirements listed in Table 404.3.1(c) and described by items (1), (2), (3), and (4). Where reinforcement is required, items (5) and (6) shall apply.

(1) Smoothly contoured wrought tees or crosses of proven design or integrally reinforced extruded headers are preferred. When such tees, crosses, or headers are not used, the reinforcing member shall extend completely around the circumference of the header [see Fig. 404.3.1(c)(1) for typical constructions]. The inside edges of the finished opening whenever possible shall be rounded to a $\frac{1}{8}$ in. (3 mm) radius. If the encircling member is thicker than the header and its ends are to be welded to the header, the ends shall be chamfered (at approximately 45 deg.) down to a thickness not in excess of the header thickness, and continuous fillet welds shall be made. Pads, partial saddles, or other types of localized reinforcements are prohibited.

(2) The reinforcement member may be of the complete encirclement type [see Fig. 404.3.1(c)(1)], pad or saddle type [see Fig. 404.3.1(c)(2)], or welding outlet fitting type. Where attached to the header by fillet welding, the edges of the reinforcement member shall be chamfered (at approximately 45 deg.) down to a thickness not in excess of the header thickness. The diameter of the hole cut in the header pipe for a branch connection shall not exceed the outside diameter of the branch connection by more than $\frac{1}{4}$ in. (6 mm).

(3) Reinforcement for branch connections with hole cut NPS 2 or smaller is not required [see Fig. 404.3.1(c)(3) for typical details]; however, care shall be taken to provide suitable protection against vibrations and other external forces to which these small branch connections are frequently subjected.

(4) Reinforcement of opening is not mandatory; however, reinforcement may be required for cases in-

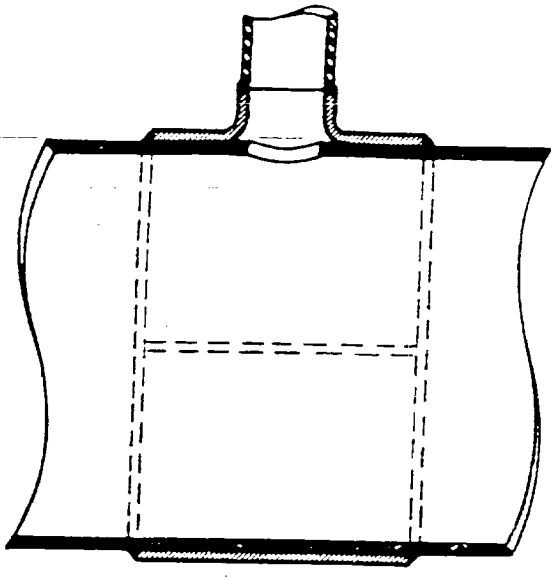

GENERAL NOTE:
Since fluid pressure is exerted on both sides of pipe metal under tee, the pipe metal does not provide reinforcement.

Tee Type

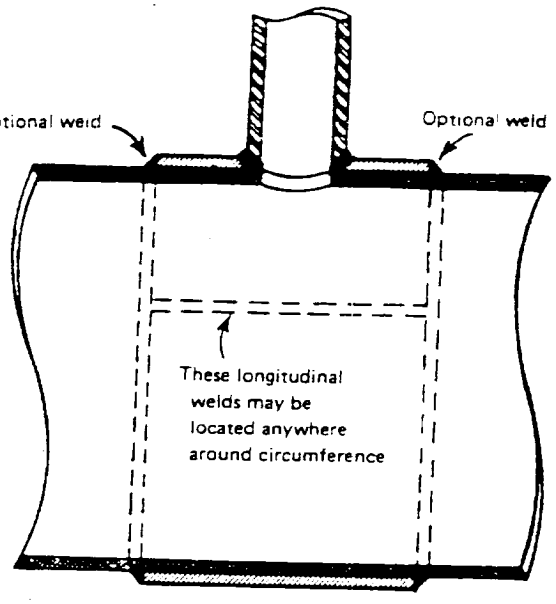

GENERAL NOTE:
Provide hole in reinforcement to reveal leakage in buried welds and to provide venting during welding and heat treatment [see para. 404.3.1(d)(8)]. Not required for tee type.

Sleeve Type

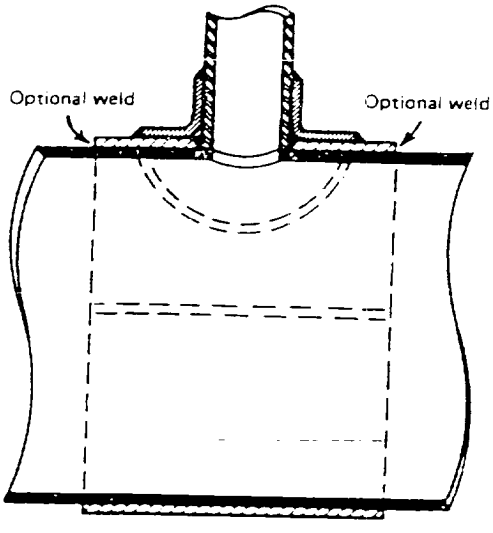

Saddle and Sleeve Type

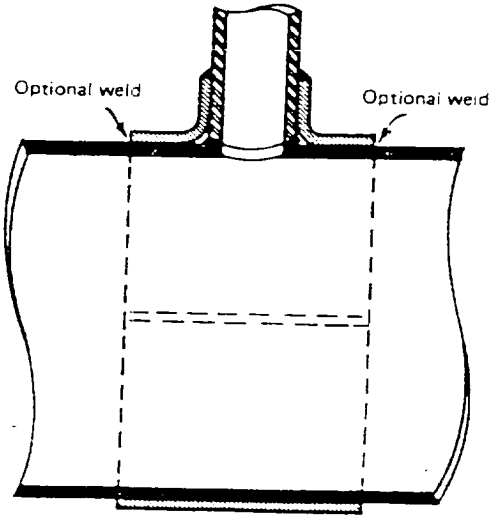

Saddle Type

GENERAL NOTE:
If the encircling member for tee, sleeve, or saddle type is thicker than the header and its ends are to be welded to the header, the ends shall be chamfered (at approximately 45 deg.) down to a thickness not in excess of the header thickness.

FIG. 404.3.1(c)(1) WELDING DETAILS FOR OPENINGS WITH COMPLETE ENCIRCLEMENT TYPES OF REINFORCEMENT

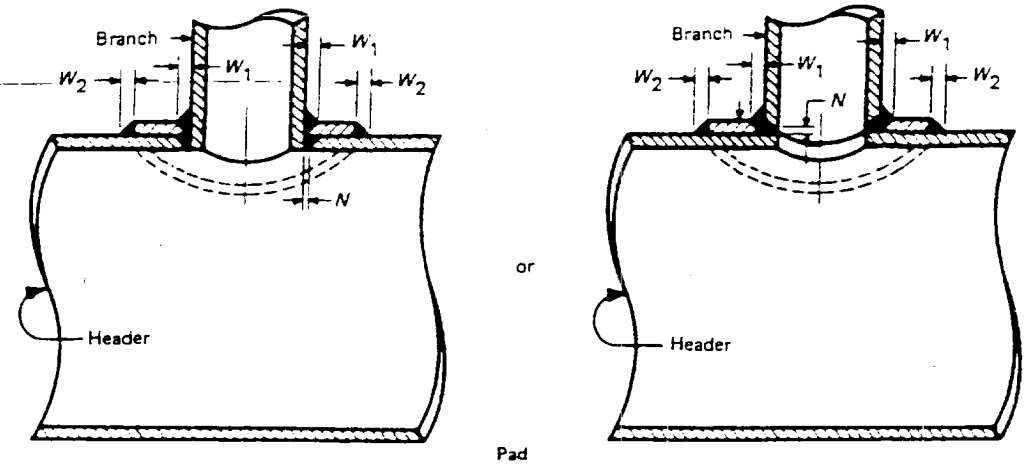

Pad

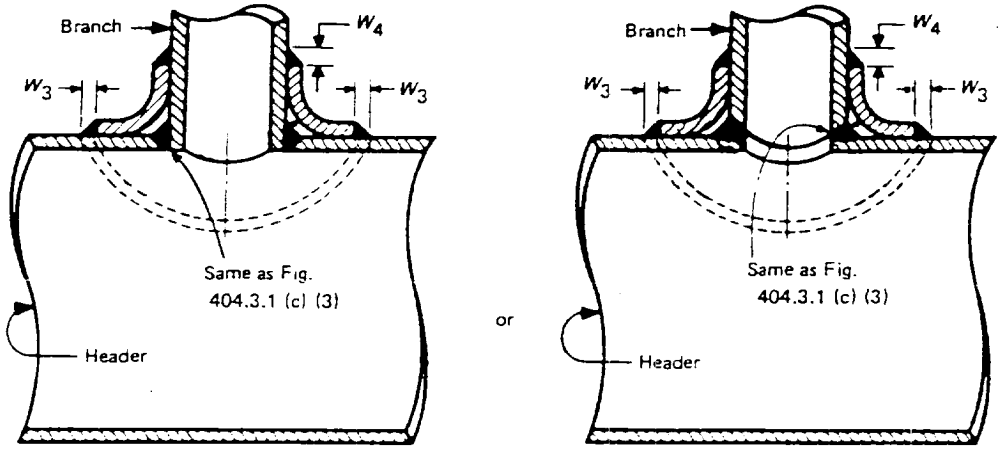

Saddle

M = nominal wall thickness of pad reinforcement member

M_b = nominal wall thickness of saddle at branch end

M_h = nominal wall thickness of saddle at header end

N = 1/16 in. (1.5 mm) (min.), 1/8 in. (3 mm) (max.)(unless back welded or backing strip is used)

T_b = nominal wall thickness of branch

T_h = nominal wall thickness of header

W_1 (min.) = the smaller of T_b, M, or 3/8 in. (10 mm)

W_2 (max.) = approx. T_h

W_2 (min.) = the smaller of 0.7 T_h, 0.7 M, or 1/2 in. (13 mm)

W_3 (max.) = approx. T_h

W_3 (min.) = the smaller of 0.7 T_h, 0.7 M_h, or 1/2 in. (13 mm)

W_4 (min.) = the smaller of T_b, M_b, or 3/8 in. (10 mm)

GENERAL NOTES:

(a) All welds are to have equal leg dimensions and a minimum throat equal to 0.707 × leg dimension.

(b) If the reinforcing member is thicker at its edge than the header, the edge shall be chamfered (at approximately 45 deg.) down to a thickness such that leg dimensions of the fillet weld shall be within the minimum and maximum dimensions specified above.

(c) A hole shall be provided in reinforcement to reveal leakage in buried welds and to provide venting during welding and heat treatment [see para. 404.3.1(d)(8)].

FIG. 404.3.1(c)(2) WELDING DETAILS FOR OPENINGS WITH LOCALIZED TYPE REINFORCEMENT

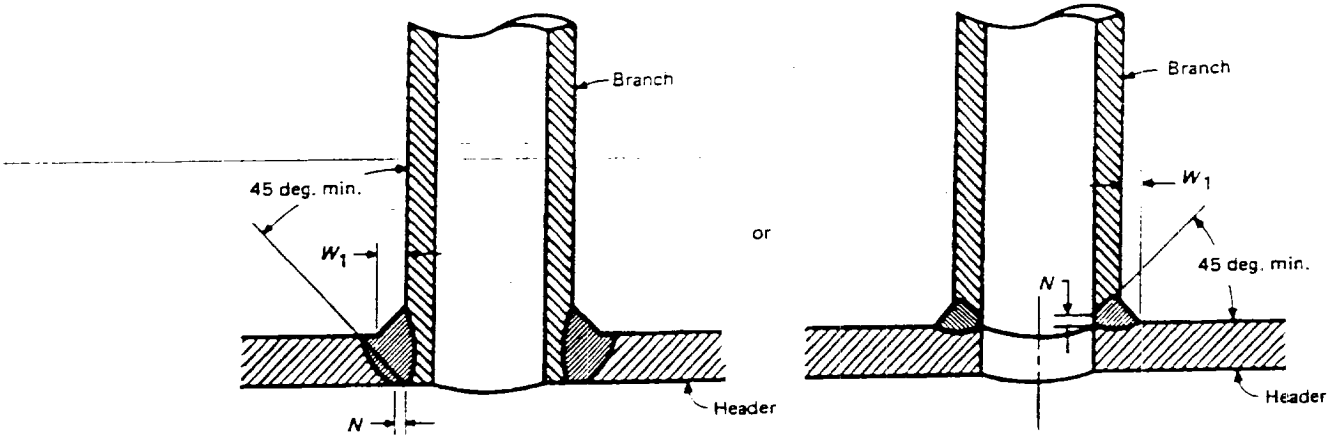

GENERAL NOTE:
When a welding saddle is used, it shall be inserted over this type of connection. See Fig. 404.3.1 (c) (2).

T_h = nominal wall thickness of header
T_b = nominal wall thickness of branch
W_1 (min.) = the smaller of T_h, T_b or 3/8 in. (10 mm)
N = 1/16 in. (1.5 mm) (min.), 1/8 in. (3 mm) (max.) unless back welded or backing strip is used

FIG. 404.3.1(c)(3) WELDING DETAILS FOR OPENINGS WITHOUT REINFORCEMENT OTHER THAN THAT IN HEADER AND BRANCH WALLS

TABLE 404.3.1(c)
DESIGN CRITERIA FOR WELDED BRANCH CONNECTIONS

Ratio of Design Hoop Stress to Specfied Min. Yield Strength of the Header	Ratio of Diameter of Hole Cut for Branch Connection to Nominal Header Diameter		
	25% or less	More than 25% Through 50%	More Than 50%
20% or less	(4)	(4)	(4)(5)
More than 20% through 50%	(2)(3)	(2)	(2)
More than 50%	(2)(3)	(2)	(2)

volving pressure over 100 psi (7 bar), thin wall pipe, or severe external loads.

(5) If a reinforcement member is required, and the branch diameter is such that a localized type of reinforcement member would extend around more than half the circumference of the header, then a complete encirclement type of reinforcement member shall be used, regardless of the design hoop stress, or a smoothly contoured wrought steel tee or cross of proven design or extruded header may be used.

(6) The reinforcement shall be designed in accordance with para. 404.3.1(d).

(d) Reinforcement of Single Openings

(1) When welded branch connections are made to pipe in the form of a single connection, or in a header or manifold as a series of connections, the design shall be adequate to control the stress levels in the pipe within safe limits. The construction shall take cognizance of the stresses in the remaining pipe wall due to the opening in the pipe or header, the shear stresses produced by

the pressure acting on the area of the branch opening, and any external loading due to thermal movement, weight, vibration, etc., and shall meet the minimum requirements listed in Table 404.3.1(c). The following paragraphs provide design rules based on the stress intensification created by the existence of a hole in an otherwise symmetrical section. External loadings, such as those due to thermal expansion or unsupported weight of connecting pipe, have not been evaluated. These factors should be given attention in unusual designs or under conditions of cyclic loading.

When pipe which has been cold worked to meet the specified minimum yield strength is used as a header containing single or multiple welded branch connections, stresses shall be in accordance with para. 402.3.1(d).

(2) The reinforcement required in the crotch section of a welded branch connection shall be determined by the rule that the metal area available for reinforcement shall be equal to or greater than the required cross-sectional area as defined in (3) below and in Fig. 404.3.1(d)(2).

(3) The required cross-sectional area A_R is defined as the product of d times t_h:

$$A_R = dt_h$$

where

d = length of the finished opening in the header wall measured parallel to the axis of the header

t_h = design header wall thickness required by para. 404.1.2. For welded pipe, when the branch does not intersect the longitudinal or spiral weld of the header, the allowable stress value for seamless pipe of comparable grade may be used in determining t_h for the purpose of reinforcement calculations only. When the branch does intersect the longitudinal or spiral weld of the header, the allowable stress value S of the header shall be used in the calculation. The allowable stress value S of the branch shall be used in calculating t_b.

(4) The area available for the reinforcement shall be the sum of:

(a) the cross-sectional area resulting from any excess thickness available in the header thickness (over the minimum required for the header as defined in para. 404.1.2) and which lies within the reinforcement area as defined in para. 404.3.1(d)(5) below;

(b) the cross-sectional area resulting from any excess thickness available in the branch wall thickness over the minimum thickness required for the branch and which lies within the reinforcement area as defined in para. 404.3.1(d)(5) below;

(c) the cross-sectional area of all added reinforcing metal, including weld metal, which is welded to the header wall and lies within the reinforcement area as defined in para. 404.3.1(d)(5) below.

(5) The reinforcement area is shown in Fig. 404.3.1(d)(2) and is defined as a rectangle whose length shall extend a distance d [see para. 404.3.1(d)(3)] on each side of the transverse centerline of the finished opening and whose width shall extend a distance of $2\frac{1}{2}$ times the header wall thickness from the outside surface of the header wall, except that in no case shall it extend more than $2\frac{1}{2}$ times the thickness of the branch wall from the outside surface of the header or of the reinforcement if any.

(6) The material of any added reinforcement shall have an allowable working stress at least equal to that of the header wall, except that material of lower allowable stress may be used if the area is increased in direct ratio of the allowable stresses for header and reinforcement material respectively.

(7) The material used for ring or saddle reinforcement may be of specifications differing from those of the pipe, provided the cross-sectional area is made in correct proportions to the relative strength of the pipe and reinforcement materials at the operating temperatures, and provided it has welding qualities comparable to those of the pipe. No credit shall be taken for the additional strength of material having a higher strength than that of the part to be reinforced.

(8) When rings or saddles are used which cover the weld between branch and header, a vent hole shall be provided in the ring or saddle to reveal leakage in the weld between branch and header and to provide venting during welding and heat treating operations. Vent holes shall be plugged during service to prevent crevice corrosion between pipe and reinforcing member, but no plugging material shall be used that would be capable of sustaining pressure within the crevice.

(9) The use of ribs or gussets shall not be considered as contributing to reinforcement to the branch connection. This does not prohibit the use of ribs or gussets for purposes other than reinforcement, such as stiffening.

(10) The branch shall be attached by a weld for the full thickness of the branch or header wall plus a fillet weld W_1 as shown in Figs. 404.3.1(c)(2) and 404.3.1(c)(3). The use of concave fillet welds is to be preferred to minimize corner stress concentration. Ring or saddle reinforcement shall be attached as shown by

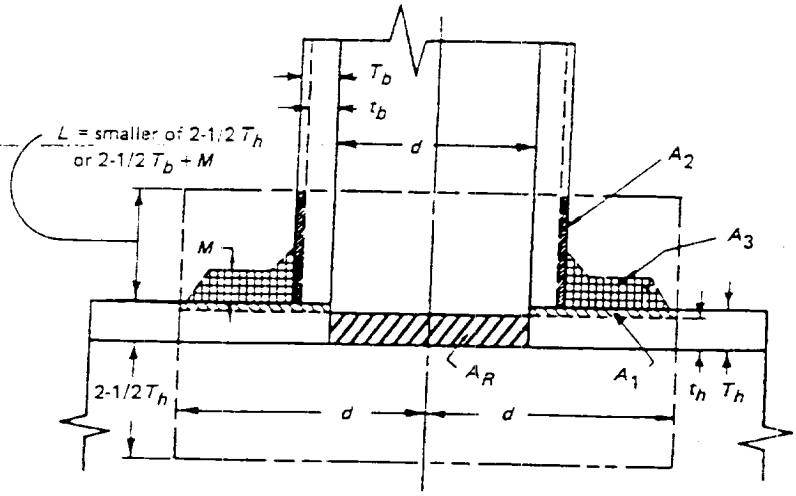

"Area of reinforcement" enclosed by ——— – – – ——— lines
Reinforcement area required $A_R = dt_h$
Area available as reinforcement = $A_1 + A_2 + A_3$
$A_1 = (T_h - t_h)\, d$
$A_2 = 2\,(T_b - t_b)\, L$
A_3 = summation of area of all added reinforcement, including weld areas that lie within the "area of reinforcement"
$A_1 + A_2 + A_3$ must be equal to or greater than A_R
where
T_h = nominal wall thickness of header
T_b = nominal wall thickness of branch
t_b = design branch wall thickness required by para. 404.1.2
t_h = design header wall thickness required by para. 404.1.2
d = length of the finished opening in the header wall (measured parallel to the axis of the header)
M = actual (by measurement) or nominal thickness of added reinforcement

FIG. 404.3.1(d)(2) REINFORCEMENT OF BRANCH CONNECTIONS

Fig. 404.3.1(c)(2). If the reinforcing member is thicker at its edge than the header, the edge shall be chamfered (at approximately 45 deg.) down to a thickness so leg dimensions of the fillet weld shall be within the minimum and maximum dimensions specified in Fig. 404.3.1(c)(2).

(11) Reinforcement rings and saddles shall be accurately fitted to the parts to which they are attached. Figures 404.3.1(c)(1) and 404.3.1(c)(2) illustrate some acceptable forms of reinforcement.

Branch connections attached at an angle less than 90 deg. to the header become progressively weaker as the angle becomes less. Any such design shall be given individual study, and sufficient reinforcement shall be provided to compensate for the inherent weakness of such construction. The use of encircling ribs to support the flat or reentering surfaces is permissible and may be included in the strength considerations. The designer is cautioned that stress concentrations near the ends of partial ribs, straps, or gussets may defeat their reinforcing value, and their use is not recommended.

(e) Reinforcement of Multiple Openings

(1) Two adjacent branches should preferably be spaced at such a distance that their individual effective areas of reinforcement do not overlap. When two or more adjacent branches are spaced at less than two times their average diameter (so that their effective areas of reinforcement overlap), the group of openings shall be reinforced in accordance with para. 404.3.1(d). The reinforcing metal shall be added as a combined

reinforcement, the strength of which shall equal the combined strengths of the reinforcements that would be required for the separate openings. In no case shall any portion of a cross section be considered to apply to more than one opening, or be evaluated more than once in a combined area.

(2) When more than two adjacent openings are to be provided with a combined reinforcement, the minimum distance between centers of any two of these openings shall preferably be at least $1\frac{1}{2}$ times their average diameter, and the area of reinforcement between them shall be at least equal to 50% of the total required for these two openings on the cross section being considered.

(3) When two adjacent openings as considered under para. 404.3.1(e)(2) have the distance between centers less than $1\frac{1}{3}$ times their average diameter, no credit for reinforcement shall be given for any of the metal between these two openings.

(4) When pipe which has been cold worked to meet the specified minimum yield strength is used as a header containing single or multiple welded branch connections, stresses shall be in accordance with para. 402.3.1(d).

(5) Any number of closely spaced adjacent openings, in any arrangement, may be reinforced as if the group were treated as one assumed opening of a diameter enclosing all such openings.

404.3.4 Attachments. External and internal attachments to piping shall be designed so they will not cause flattening of the pipe, excessive localized bending stresses, or harmful thermal gradients in the pipe wall. See para. 421.1 for design of pipe supporting elements.

404.5 Pressure Design of Flanges

404.5.1 General

(a) The design of flanges manufactured in accordance with para. 408.1 and the standards listed in Table 426.1 shall be considered suitable for use at the pressure-temperature ratings as set forth in para. 402.2.1.

(b) It is permissible to inside taper bore the hubs on welding neck flanges having dimensions complying with ASME B16.5 when they are to be attached to thin wall pipe. It is recommended that the taper shall not be more abrupt than a ratio of 1:3. MSS SP-44, NPS 26, and larger "pipeline" flanges are designed for attachment to thin wall pipe and are preferred for this service.

(c) Where conditions require the use of flanges other than those covered in para. 408.1, the flanges shall be designed in accordance with Appendix II of Section VIII, Division 1, of the ASME Boiler and Pressure Vessel Code.

(d) Slip-on flanges of rectangular cross section shall be designed so that flange thickness is increased to provide strength equal to that of the corresponding hubbed slip-on flange covered by ASME B16.5, as determined by calculations made in accordance with the ASME Boiler and Pressure Vessel Code, Section VIII, Division 1.

404.6 Reducers

(a) Reducer fittings manufactured in accordance with ASME B16.5, ASME B16.9, or MSS SP-75 shall have pressure-temperature ratings based on the same stress values as were used in establishing the pressure-temperature limitations for pipe of the same or equivalent material.

(b) Smoothly contoured reducers fabricated to the same nominal wall thickness and of the same type of steel as the adjoining pipe shall be considered suitable for use at the pressure-temperature ratings of the adjoining pipe. Seam welds of fabricated reducers shall be inspected by radiography or other accepted nondestructive methods (visual inspection excepted).

(c) Where appropriate, changes in diameter may be accomplished by elbows, reducing outlet tees, or valves.

404.7 Pressure Design of Other Pressure Containing Components

Pressure containing components which are not covered by the standards listed in Tables 423.1 or 426.1 and for which design equations or procedures are not given herein may be used where the design of similarly shaped, proportioned, and sized components has been proven satisfactory by successful performance under comparable service conditions. (Interpolation may be made between similarly shaped proved components with small differences in size or proportion.) In the absence of such service experience, the pressure design shall be based on an analysis consistent with the general design philosophy embodied in this Code, and substantiated by at least one of the following:

(a) proof tests (as are described in UG-101 of Section VIII, Division 1, of the ASME Boiler and Pressure Vessel Code);

(b) experimental stress analysis (such as described in Appendix 6 of Section VIII, Division 2, of the ASME Boiler and Pressure Vessel Code);

(c) engineering calculations.

PART 3
DESIGN APPLICATIONS OF PIPING COMPONENTS SELECTION AND LIMITATIONS

405 PIPE

405.2 Metallic Pipe

405.2.1 Ferrous Pipe

(a) New pipe of the specifications listed in Table 423.1 may be used in accordance with the design equation of para. 404.1.2 subject to the testing requirements of paras. 437.1.4, 437.4.1, and 437.4.3.

(b) Used pipe of known specification listed in Table 423.1 may be used in accordance with the design equation of para. 404.1.2 subject to the testing requirements of paras. 437.4.1, 437.6.1, 437.6.3, and 437.6.4.

(c) New or used pipe of unknown or ASTM A 120 specification may be used in accordance with the design equation in para. 404.1.2 with an allowable stress value as specified in para. 402.3.1(c) and subject to the testing requirements of paras. 437.4.1, 437.4.3, 437.6.1, 437.6.3, 437.6.4, and 437.6.5, if 24,000 psi (165 MPa) yield strength is used to establish an allowable stress value; or para. 437.4.1, and paras. 437.6.1 through 437.6.7 inclusive, if a yield strength above 24,000 psi (165 MPa) is used to establish an allowable stress value.

(d) Pipe which has been cold worked in order to meet the specified minimum yield strength and is subsequently heated to 600°F (300°C) or higher (welding excepted) shall be limited to a stress value as noted in para. 402.3:1(d).

(e) Coated or Lined Pipe. External or internal coatings or linings of cement, plastics, or other materials may be used on steel pipe conforming to the requirements of this Code. These coatings or linings shall not be considered to add strength.

406 FITTINGS, ELBOWS, BENDS, AND INTERSECTIONS

406.1 Fittings

406.1.1 General

(a) Steel Butt Welding Fittings. When steel butt welding fittings [see paras. 404.2.2(b), 404.3.1(a)(2), and 404.3.1(a)(3)] are used, they shall comply with ASME B16.9, ASME B16.28, or MSS SP-75.

(b) Steel Flanged Fittings. When steel flanged fittings [see paras. 404.3.1(a)(1) and 404.5.1] are used, they shall comply with ASME B16.5.

(c) Fittings Exceeding Scope of Standard Sizes. Fittings exceeding scope of standard sizes or otherwise departing from dimensions listed in the standards referred to in para. 406.1.1(a) or 406.1.1(b) may be used, provided the designs meet the requirements of paras. 403 and 404.

406.2 Bends, Miters, and Elbows

406.2.1 Bends Made From Pipe

(a) Bends may be made by bending the pipe when they are designed in accordance with para. 404.2.1 and made in accordance with para. 434.7.1.

(b) Except as permitted under para. 406.2.1(c), the minimum radius of field cold bends shall be as follows:

Nominal Pipe Size	Minimum Radius of Bend in Pipe Diameters
NPS 12 and smaller	18D
14	21
16	24
18	27
NPS 20 and larger	30

In some cases, thin wall pipe will require the use of an internal mandrel when being bent to the minimum radii tabulated above.

(c) Bends may be made by bending the pipe in sizes NPS 14 and larger to a minimum radius of 18D; however, bending pipe to radii approaching 18D that will meet requirements in para. 434.7.1(b) will be dependent upon wall thickness, ductility, ratio of pipe diameter to wall thickness, use of bending mandrel, and skill of bending crew. Test bends shall be made to determine that the field bending procedure used produces bends meeting the requirements of para. 434.7.1(b) and that the wall thickness after bending is not less than the minimum permitted by the pipe specification.

406.2.2 Mitered Bends. In systems intended to operate at a hoop stress of more than 20% of the specified minimum yield strength of the pipe, miter bends are prohibited. Miter bends not exceeding 12½ deg. may be used in systems operated at a hoop stress of 20% or less of the specified minimum yield strength of the pipe, and the minimum distance between miters measured at the crotch shall not be less than one pipe diameter. When the system is to be operated at a hoop stress of less than 10% of the specified minimum yield strength of the pipe, the restriction to 12½ deg. maximum miter and distance between miters will not apply. Deflections caused by misalignment up to 3 deg. are not considered miter bends.

406.2.3 Factory Made Bends and Elbows

(a) Factory made bends and factory made wrought steel elbows may be used provided they meet the design requirements of paras. 404.2.1 and 404.2.2 and the construction requirements of para. 434.7.3. Such fittings shall have approximately the same mechanical properties and chemical composition as the pipe to which they are welded.

(b) If factory made elbows are used in cross-country lines, care should be taken to allow for passage of pipe-line scrapers.

406.2.4 Wrinkle Bends. Wrinkle bends shall not be used.

406.3 Couplings

Cast, malleable, or wrought iron threaded couplings are prohibited.

406.4 Reductions

406.4.1 Reducers. Reductions in line size may be made by the use of smoothly contoured reducers selected in accordance with ASME B16.5, ASME B16.9, or MSS SP-75, or designed as provided in para. 404.6.

406.4.2 Orange Peel Swages. Orange peel swages are prohibited in systems operating at hoop stresses of more than 20% of the specified minimum yield strength of the pipe.

406.5 Intersections

Intersection fittings and welded branch connections are permitted within the limitations listed in para. 406.1 (see para. 404.3 for design).

406.6 Closures

406.6.1 Quick Opening Closures. A quick opening closure is a pressure containing component (see para. 404.7) used for repeated access to the interior of a piping system. It is not the intent of this Code to impose the requirements of a specific design method on the designer or manufacturer of a quick opening closure.

Quick opening closures used for pressure containment under this Code shall have pressure and temperature ratings equal to or in excess of the design requirements of the piping system to which they are attached. See paras. 401.2.2 and 402.2.

Quick opening closures shall be equipped with safety locking devices in compliance with Section VIII, Division 1, UG-35(b) of the ASME Boiler and Pressure Vessel Code.

Weld end preparation shall be in accordance with para. 434.8.6.

406.6.2 Closure Fittings. Closure fittings commonly referred to as "weld caps" shall be designed and manufactured in accordance with ASME B16.9 or MSS SP-75.

406.6.3 Closure Heads. Closure heads such as flat, ellipsoidal (other than in para. 406.6.2 above), spherical, or conical heads are allowed for use under this Code. Such items shall be designed in accordance with Section VIII, Division 1, of the ASME Boiler and Pressure Vessel Code. The maximum allowable stresses for materials used in these closure heads shall be established under the provisions of para. 402.3.

If welds are used in the construction of these heads, they shall be 100% radiographically inspected in accordance with the provisions of Section VIII, Division 1.

Closure heads shall have pressure and temperature ratings equal to or in excess of the requirement of para. 401.2.2. It is not the intent of this Code to necessarily extend the design requirements of Section VIII, Division 1, to other components in which closure heads are part of a complete assembly.

406.6.4 Fabricated Closures. Orange peel bull plugs are prohibited on systems operating at a hoop stress more than 20% of the specified minimum yield strength of the pipe. Fishtails and flat closures are permitted for NPS 3 pipe and smaller, operating at less than 100 psi (7 bar). Fishtails on pipe larger than NPS 3 are prohibited.

406.6.5 Bolted Blind Flange Closures. Bolted blind flange closures shall conform to para. 408.

407 VALVES

407.1 General

(a) Steel valves conforming to standards and specifications listed in Tables 423.1 and 426.1 may be used. These valves may contain certain cast, malleable, or wrought iron parts as provided for in API 6D.

(b) Cast iron valves conforming to standards and specifications listed in Tables 423.1 and 426.1 may be used for pressures not to exceed 250 psi (17 bar). Care shall be exercised to prevent excessive mechanical loadings (see para. 408.5.4).

(c) Working pressure ratings of the steel parts of steel valves are applicable within the temperature limita-

tions of −20°F (−30°C) to 250°F (120°C) (see para. 401.3.1). Where resilient, rubberlike, or plastic materials are used for sealing, they shall be capable of withstanding the fluid, pressures, and temperatures specified for the piping system.

407.8 Special Valves

Special valves not listed in Tables 423.1 and 426.1 shall be permitted, provided that their design is of at least equal strength and tightness and they are capable of withstanding the same test requirements as covered in these standards, and structural features satisfy the material specification and test procedures of valves in similar service set forth in the listed standards.

408 FLANGES, FACINGS, GASKETS, AND BOLTING

408.1 Flanges

408.1.1 General

(a) Flanged connections shall conform to the requirements of paras. 408.1, 408.3, 408.4, and 408.5.

(b) Steel Flanges Within Scope of Standard Sizes. Welding neck, slip-on, threaded, and lapped companion flanges, reducing flanges, blind flanges, and flanges cast or forged integral with pipe, fittings, or valves, conforming to ASME B16.5 or MSS SP-44, are permitted in the sizes listed in these standards and for the pressure-temperature ratings shown in para. 402.2.1. The bore of welding neck flanges should correspond to the inside diameter of the pipe with which they are to be used. See para. 404.5.1 for design.

(c) Cast Iron Flanges Within Scope of Standard Sizes. Cast iron flanges are prohibited, except those which are an integral part of cast iron valves, pressure vessels, and other equipment and proprietary items [see para. 407.1(b) and 423.2.4(b)].

(d) Flanges Exceeding Scope of Standard Sizes. Flanges exceeding scope of standard sizes or otherwise departing from dimensions listed in ASME B16.5 or MSS SP-44 may be used provided they are designed in accordance with para. 404.5.1.

(e) Flanges of Rectangular Cross Section. Slip-on flanges of rectangular cross section may be used provided they are designed in accordance with para. 404.5.1(d).

408.3 Flange Facings

408.3.1 General

(a) Standard Facings. Steel or cast iron flanges shall have contact faces in accordance with ASME B16.5 or MSS SP-6.

(b) Special Facings. Special facings are permissible provided they are capable of withstanding the same tests as those in ASME B16.5. See para. 408.5.4 for bolting steel to cast iron flanges.

408.4 Gaskets

408.4.1 General. Gaskets shall be made of materials which are not injuriously affected by the fluid in the piping system, and shall be capable of withstanding the pressures and temperatures to which they will be subjected in service.

408.4.2 Standard Gaskets

(a) Gaskets conforming to ASME B16.20 or to ASME B16.21 may be used.

(b) Metallic gaskets other than ring type or spirally wound metal asbestos shall not be used with ANSI Class 150 or lighter flanges.

(c) The use of metal or metal jacketed asbestos (either plain or corrugated) is not limited [except as provided in para. 408.4.2(b)] as to pressure, provided that the gasket material is suitable for the service temperature. These types of gaskets are recommended for use with the small male and female or the small tongue and groove facings. They may also be used with steel flanges with any of the following facings: lapped, large male and female, large tongue and groove, or raised face.

(d) Asbestos composition gaskets may be used as permitted in ASME B16.5. This type of gasket may be used with any of the various flange facings except small male and female, or small tongue and groove.

(e) Rings for ring joints shall be of dimensions established in ASME B16.20. The materials for these rings shall be suitable for the service conditions encountered and shall be softer than the flanges.

408.4.3 Special Gaskets. Special gaskets, including insulating gaskets, may be used provided they are suitable for the temperatures, pressures, fluids, and other conditions to which they may be subjected.

408.5 Bolting

408.5.1 General

(a) Bolts or stud bolts shall extend completely through the nuts.

(b) Nuts shall conform with ASTM A 194 or A 325, except that A 307 Grade B nuts may be used on ASME Class 150 and ASME Class 300 flanges.

408.5.2 Bolting for Steel Flanges. Bolting shall conform to ASME B16.5.

408.5.3 Bolting for Insulating Flanges. For insulating flanges, $\frac{1}{8}$ in. (3 mm) undersize bolting may be used provided that alloy steel bolting material in accordance with ASTM A 193 or A 354 is used.

408.5.4 Bolting Steel to Cast Iron Flanges. When bolting Class 150 steel flanges to Class 125 cast iron flanges, heat treated carbon steel or alloy steel bolting (ASTM A 193) may be used only when both flanges are flat face and the gasket is full face; otherwise, the bolting shall have a maximum tensile strength no greater than the maximum tensile strength of ASTM A 307 Grade B. When bolting Class 300 steel flanges to Class 250 cast iron flanges, the bolting shall have a maximum tensile strength no greater than the maximum tensile strength of ASTM A 307 Grade B. Good practice indicates that the flange should be flat faced.

408.5.5 Bolting for Special Flanges. For flanges designed in accordance with para. 404.5.1 [see paras. 408.1.1(d) and 408.1.1(e)], bolting shall conform to the applicable section of Section VIII, Division 1, of the ASME Boiler and Pressure Vessel Code.

409 USED PIPING COMPONENTS AND EQUIPMENT

Used piping components, such as fittings, elbows, bends, intersections, couplings, reducers, closures, flanges, valves, and equipment, may be reused. [Reuse of pipe is covered by para. 405.2.1(b).] However, such components and equipment shall be cleaned and examined; reconditioned, if necessary, to insure that they meet all requirements for the intended service; and sound and free of defects.

In addition, reuse shall be contingent on identification of the specification under which the item was originally produced. Where the specification cannot be identified, use shall be restricted to a maximum allowable operating pressure based on a yield strength of 24,000 psi (165 MPa) or less.

PART 4
SELECTION AND LIMITATION OF PIPING JOINTS

411 WELDED JOINTS

411.2 Butt Welds

Butt welded joints shall be in accordance with Chapter V.

412 FLANGED JOINTS

412.1 General

Flanged joints shall meet the requirements of para. 408.

414 THREADED JOINTS

414.1 General

All external pipe threads on piping components shall be taper pipe threads. They shall be line pipe threads in accordance with API 5B, or NPT threads in accordance with ASME B1.20.1. All internal pipe threads on piping components shall be taper pipe threads, except for sizes NPS 2 and smaller with design gage pressures not exceeding 150 psi (10 bar), in which case straight threads may be used.

Least nominal wall thickness for threaded pipe shall be standard wall (see ASME B36.10M).

418 SLEEVE, COUPLED, AND OTHER PATENTED JOINTS

418.1 General

Steel connectors and swivels complying with API 6D may be used. Sleeve, coupled, and other patented joints, except as limited in para. 423.2.4(b), may be used provided:

(a) a prototype joint has been subject to proof tests to determine the safety of the joints under simulated service conditions. When vibration, fatigue, cyclic conditions, low temperature, thermal expansion, or other severe conditions are anticipated, the applicable conditions shall be incorporated in the tests.

(b) adequate provision is made to prevent separation of the joint and to prevent longitudinal or lateral movement beyond the limits provided for in the joining member.

PART 5
EXPANSION, FLEXIBILITY, STRUCTURAL ATTACHMENTS, SUPPORTS, AND RESTRAINTS

419 EXPANSION AND FLEXIBILITY

419.1 General

(a) This Code is applicable to both aboveground and buried piping and covers all classes of materials permitted by this Code. Formal calculations shall be required where reasonable doubt exists as to the adequate flexibility of the piping.

(b) Piping shall be designed to have sufficient flexibility to prevent expansion or contraction from causing excessive stresses in the piping material, excessive bending moments at joints, or excessive forces or moments at points of connection to equipment or at anchorage or guide points. Allowable forces and moments on equipment may be less than for the connected piping.

(c) Expansion calculations are necessary for buried lines if significant temperature changes are expected, such as when the line is to carry a heated oil. Thermal expansion of buried lines may cause movement at points where the line terminates, changes in direction, or changes in size. Unless such movements are restrained by suitable anchors, the necessary flexibility shall be provided.

(d) Expansion of aboveground lines may be prevented by anchoring them so that longitudinal expansion, or contraction, due to thermal and pressure changes is absorbed by direct axial compression or tension of the pipe in the same way as for buried piping. In addition, however, beam bending stresses shall be included and the possible elastic instability of the pipe, and its supports, due to longitudinal compressive forces shall be considered.

419.5 Flexibility

419.5.1 Means of Providing Flexibility. If expansion is not absorbed by direct axial compression of the pipe, flexibility shall be provided by the use of bends, loops, or offsets; or provision shall be made to absorb thermal strains by expansion joints or couplings of the slip joint, ball joint, or bellows type. If expansion joints are used, anchors or ties of sufficient strength and rigidity shall be installed to provide for end forces due to fluid pressure and other causes.

419.6 Properties

419.6.1 Coefficient of Thermal Expansion. The linear coefficient of thermal expansion for carbon and low alloy high tensile steel may be taken as 6.5×10^{-6} in./in./°F for temperatures up to 250°F (11.7×10^{-6} mm/mm/°C for temperatures up to 120°C).

419.6.2 Moduli of Elasticity. Flexibility calculations shall be based on the modulus of elasticity at ambient temperature.

419.6.3 Poisson's Ratio. Poisson's ratio shall be taken as 0.3 for steel.

419.6.4 Stress Values

(a) General. There are fundamental differences in loading conditions for the buried, or similarly restrained, portions of the piping and the aboveground portions not subject to substantial axial restraint. Therefore, different limits on allowable longitudinal expansion stresses are necessary.

(b) Restrained Lines. The net longitudinal compressive stress due to the combined effects of temperature rise and fluid pressure shall be computed from the equation:

$$S_L = E\alpha(T_2 - T_1) - \nu S_h$$

where

S_L = longitudinal compressive stress, psi (MPa)
S_h = hoop stress due to fluid pressure, psi (MPa)
T_1 = temperature at time of installation, °F (°C)
T_2 = maximum or minimum operating temperature, °F (°C)
E = modulus of elasticity of steel, psi (MPa)
α = linear coefficient of thermal expansion, in./in./°F (mm/mm/°C)
ν = Poisson's ratio = 0.30 for steel

Note that the net longitudinal stress becomes compressive for moderate increases of T_2 and that according to the commonly used maximum shear theory of failure, this compressive stress adds directly to the hoop stress to increase the equivalent tensile stress available to cause yielding. As specified in para. 402.3.2(c), this equivalent tensile stress shall not be allowed to exceed 90% of the specified minimum yield strength of the pipe, calculated for nominal pipe wall thickness. Beam bending stresses shall be included in the longitudinal stress for those portions of the restrained line which are supported above ground.

(c) Unrestrained Lines. Stresses due to expansion for those portions of the piping without substantial

axial restraint shall be combined in accordance with the following equation:

$$S_E = \sqrt{S_b^2 + 4S_t^2}$$

where

S_E = stress due to expansion

$$S_b = \frac{\sqrt{(i_i M_i)^2 + (i_o M_o)^2}}{Z}$$

= equivalent bending stress, psi (MPa)

S_t = $M_t/2Z$ = torsional stress, psi (MPa)

M_i = bending moment in plane of member (for members having significant orientation, such as elbows or tees; for the latter the moments in the header and branch portions are to be considered separately), in.-lb (N·m)

M_o = bending moment out of, or transverse to, plane of member, in.-lb (N·m)

M_t = torsional moment, in.-lb (N·m)

i_i = stress intensification factor under bending in plane of member [from Fig. 419.6.4(c)]

i_o = stress intensification factor under bending out of, or transverse to, plane of member [from Fig. 419.6.4(c)]

Z = section modulus of pipe, in.^{3} (cm^3)

The maximum computed expansion stress range — S_E without regard for fluid pressure stress, based on 100% of the expansion, with modulus of elasticity for the cold condition — shall not exceed the allowable stress range S_A, where S_A = 0.72 of specified minimum yield strength of the pipe as noted in para. 402.3.2(c).

The sum of the longitudinal stresses due to pressure, weight, and other sustained external loadings shall not exceed $0.75S_A$ in accordance with para. 402.3.2(d).

The sum of the longitudinal stresses produced by pressure, live and dead loads, and those produced by occasional loads, such as wind or earthquake, shall not exceed 80% of the specified minimum yield strength of the pipe, in accordance with para. 402.3.3(a). It is not necessary to consider wind and earthquake as occurring concurrently.

As noted in para. 402.3.3(b), stresses due to test conditions are not subject to the limitations of para. 402.3. It is not necessary to consider other occasional loads, such as wind and earthquake, as occurring concurrently with the live, dead, and test loads existing at the time of test.

419.7 Analysis

419.7.3 Basic Assumptions and Requirements

(a) The effect of restraints, such as support friction, branch connections, lateral interferences, etc., shall be considered in the stress calculations.

(b) Calculations shall take into account stress intensification factors found to exist in components other than plain straight pipe. Credit may be taken for extra flexibility of such components. In the absence of more directly applicable data, the flexibility factors and stress intensification factors shown in Fig. 419.6.4(c) may be used.

(c) Nominal dimensions of pipe and fittings shall be used in flexibility calculations.

(d) Calculations of pipe stresses in loops, bends, and offsets shall be based on the total range from minimum to maximum temperature normally expected, regardless of whether piping is cold sprung or not. In addition to expansion of the line itself, the linear and angular movements of the equipment to which it is attached shall be considered.

(e) Calculations of thermal forces and moments on anchors and equipment such as pumps, meters, and heat exchangers shall be based on the difference between installation temperature and minimum or maximum anticipated operating temperature, whichever is greater.

420 LOADS ON PIPE SUPPORTING ELEMENTS

420.1 General

The forces and moments transmitted to connected equipment, such as valves, strainers, tanks, pressure vessels, and pumping machinery, shall be kept within safe limits.

421 DESIGN OF PIPE SUPPORTING ELEMENTS

421.1 Supports, Braces, and Anchors

(a) Supports shall be designed to support the pipe without causing excessive local stresses in the pipe and without imposing excessive axial or lateral friction forces that might prevent the desired freedom of movement.

(b) Braces and damping devices may occasionally be required to prevent vibration of piping.

(c) All attachments to the pipe shall be designed to minimize the added stresses in the pipe wall because

Description	Flexibility Factor k	Stress Intensification Factor i_i (1)	Stress Intensification Factor i_o (2)	Flexibility Characteristic h	Sketch
Welding elbow,[3, 4, 5, 6, 7] or pipe bend	$\frac{1.65}{h}$	$\frac{0.9}{h^{2/3}}$	$\frac{0.75}{h^{2/3}}$	$\frac{tR}{r^2}$	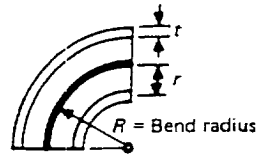
Closely spaced miter bend,[3, 4, 5, 7] $s < r(1 + \tan\theta)$	$\frac{1.52}{h^{5/6}}$	$\frac{0.9}{h^{2/3}}$	$\frac{0.75}{h^{2/3}}$	$\frac{\cot\theta}{2}\,\frac{ts}{r^2}$	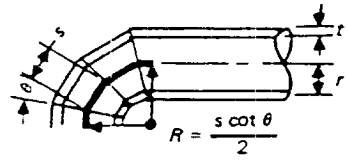
Widely spaced miter bend,[3, 4, 7, 8] $s \geq r(1 + \tan\theta)$	$\frac{1.52}{h^{5/6}}$	$\frac{0.9}{h^{2/3}}$	$\frac{0.75}{h^{2/3}}$	$\frac{1 + \cot\theta}{2}\,\frac{t}{r}$	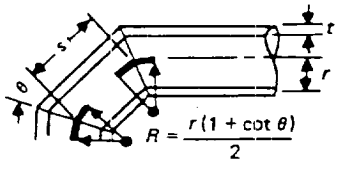
Welding tee[3, 4] per ASME B16.9	1	$0.75i_o + 0.25$	$\frac{0.9}{h^{2/3}}$	$4.4\,\frac{t}{r}$	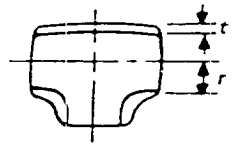
Reinforced tee[3, 4, 9] with pad or saddle	1	$0.75i_o + 0.25$	$\frac{0.9}{h^{2/3}}$	$\frac{(t + 1/2\ T)^{5/2}}{t^{3/2}\ r}$	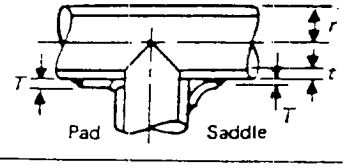
Unreinforced fabricated tee[3, 4]	1	$0.75i_o + 0.25$	$\frac{0.9}{h^{2/3}}$	$\frac{t}{r}$	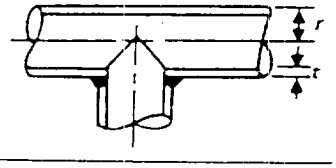
Extruded welding tee[3, 4, 11] $r_o \geq 0.05d$ $t_c < 1.5t$	1	$0.75i_o + 0.25$	$\frac{0.9}{h^{2/3}}$	$\left(1 + \frac{r_o}{r}\right)\frac{t}{r}$	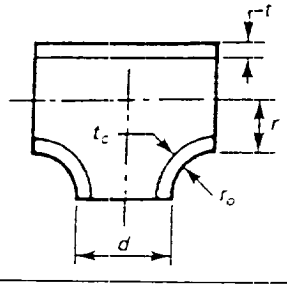

FIG. 419.6.4(c) FLEXIBILITY FACTOR k AND STRESS INTENSIFICATION FACTOR i

Description	Flexibility Factor k	Stress Intensification Factor i (1)	Stress Intensification Factor i_c (2)	Flexibility Characteristic h	Sketch
Butt welded joint, reducer, or welding neck flange	1	1.0		...	...
Double welded slip-on flange	1	1.2		...	...
Fillet welded joint (single welded), or single welded slip-on flange	1	1.3		...	...
Lapped flange (with ANSI B16.9 lap-joint stub)	1	1.6		...	...
Threaded pipe joint, or threaded flange	1	2.3		...	...
Corrugated straight pipe, or corrugated or creased bend[10]	5	2.5		...	...

NOTES:

(1) In-plane.

(2) Out-of-plane.

(3) For fittings and miter bends, the flexibility factors k and stress intensification factors i in the Table apply to bending in any plane and shall not be less than unity; factors for torsion equal unity. Both factors apply over the effective arc length (shown by heavy center lines in the sketches) for curved and miter elbows, and to the intersection point for tees.

(4) The values of k and i can be read directly from Chart A by entering with the characteristic h computed from the equations given, where

R = bend radius of welding elbow or pipe bend, in. (mm)

T = pad or saddle thickness, in. (mm)

d = outside diameter of branch

r = mean radius of matching pipe, in. (mm)

r_o = see Note (11)

s = miter spacing at center line

t = nominal wall thickness of: part itself, for elbows and curved or mited bends; matching pipe, for welding tees; run or header, for fabricated tees (provided that if thickness is greater than that of matching pipe, increased thickness must be maintained for at least one run O.D. to each side of the branch O.D.).

t_c = the crotch thickness of tees

θ = one-half angle between adjacent miter axes, deg.

(5) Where flanges are attached to one or both ends, the values of k and i in the Table shall be corrected by the factors C_1 given below, which can be read directly from Chart B, entering with the computed h: one end flanged, $h^{1/6} \geq 1$; both ends flanged, $h^{1/3} \geq 1$.

(6) The engineer is cautioned that cast butt welding elbows may have considerably heavier walls than that of the pipe with which they are used. Large errors may be introduced unless the effect of these greater thicknesses is considered.

(7) In large diameter thin wall elbows and bends, pressure can significantly affect the magnitude of flexibility and stress intensification factors. To correct values obained from Table for the pressure effect, divide:

$$\text{Flexibility factor } k \text{ by} \qquad 1 + 6\,\frac{P}{E_c}\left(\frac{r}{t}\right)^{7/3}\left(\frac{R}{r}\right)^{1/3}$$

$$\text{Stress intensification factor } i \text{ by} \qquad 1 + 3.25\,\frac{P}{E_c}\left(\frac{r}{t}\right)^{5/2}\left(\frac{R}{r}\right)^{2/3}$$

where

E_c = cold modulus of elasticity

P = gage pressure

(8) Also includes single miter joint.

(9) When $T > 1\frac{1}{2}t$, use $h = 4.05\ t/r$.

(10) Factors shown apply to bending; flexibility factor for torsion equals 0.9.

FIG. 419.6.4(c) FLEXIBILITY FACTOR k AND STRESS INTENSIFICATION FACTOR i (CONT'D)

(11) Radius of curvature of external contoured portion of outlet measured in the plane containing the axes of the run and branch. This is subject to the following limitations:
(a) minimum radius r_o: the lesser of $0.05d$ or 38 mm (1.5 in.);
(b) maximum radius r_o shall not exceed:
(1) for branches DN200 (NPS 8) and larger, $0.10d + 13$ mm (0.50 in);
(2) for branches less than DN200 (NPS 8), 32 mm (1.25 in.);
(c) when the external contour contains more than one radius, the radius on any arc sector of approximately 45 deg. shall meet the requirements of (a) and (b) above;
(d) machining shall not be employed in order to meet the above requirements.

FIG. 419.6.4(c) FLEXIBILITY FACTOR k AND STRESS INTENSIFICATION FACTOR i (CONT'D)

of the attachment. Nonintegral attachments, such as pipe clamps and ring girders, are preferred where they will fulfill the supporting or anchoring functions.

(d) If pipe is designed to operate above 20% SMYS, all attachments welded to the pipe shall be made to a separate cylindrical member that completely encircles the pipe, and this encircling member shall be welded to the pipe by continuous circumferential welds.

(e) The applicable sections of MSS SP-58 for materials and design of pipe hangers and supports and of MSS SP-69 for their selection and application may be used.

PART 6
AUXILIARY AND OTHER SPECIFIC PIPING

422 DESIGN REQUIREMENTS

422.3 Instrument and Other Auxiliary Liquid Petroleum or Liquid Anhydrous Ammonia Piping

All instrument and other auxiliary piping connected to primary piping and which operates at a gage pressure exceeding 15 psi (1 bar) shall be constructed in accordance with the provisions of this Code.

422.6 Pressure Disposal Piping

Pressure disposal or relief piping between pressure origin point and relief device shall be in accordance with this Code.

422.6.1 A full area stop valve may be installed between origin point and relief device providing such valve can be locked or sealed in the open position.

422.6.2 Disposal piping from relief device shall be connected to a proper disposal facility, which may be a flare stack, suitable pit, sump, or tank. This disposal piping shall have no valve between relief device and disposal facility unless such valve can be locked or sealed in the open position.

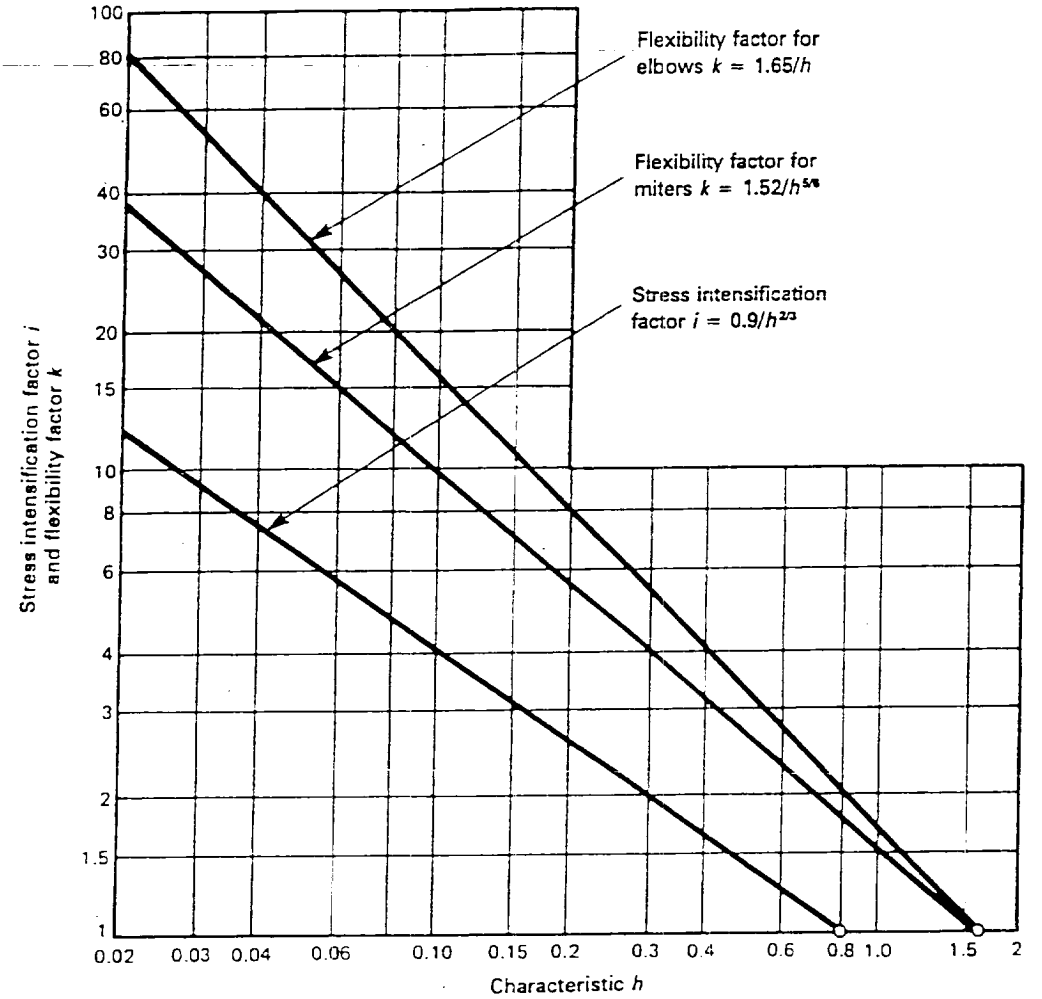

Chart A

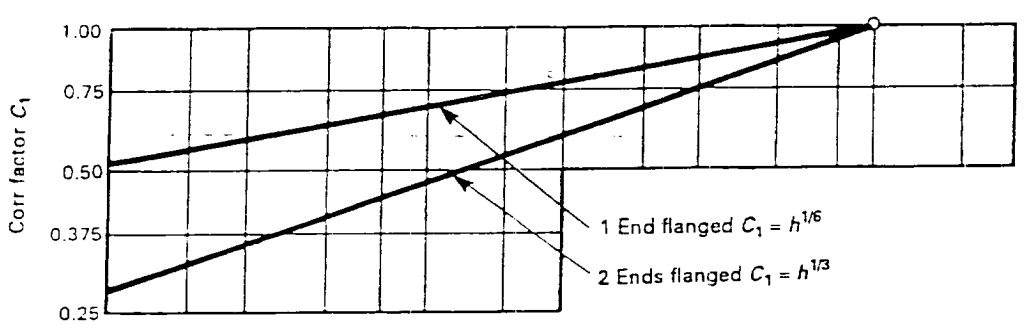

Chart B

FIG. 419.6.4(c) FLEXIBILITY FACTOR k AND STRESS INTENSIFICATION FACTOR i (CONT'D)

CHAPTER III
MATERIALS

423 MATERIALS — GENERAL REQUIREMENTS

423.1 Acceptable Materials and Specifications

(a) The materials used shall conform to the specifications listed in Table 423.1 or shall meet the requirements of this Code for materials not listed. Specific editions of standards incorporated in this Code by reference, and the names and addresses of the sponsoring organizations, are shown in Appendix A, since it is not practical to refer to a specific edition of each standard in Table 423.1 and throughout the Code text. Appendix A will be revised at intervals, as needed, and issued in Addenda to the Code. Materials and components conforming to a specification or standard previously listed in Table 423.1, or to a superseded edition of a listed specification or standard, may be used.

(b) Except as otherwise provided for in this Code, materials which do not conform to a listed specification or standard shall be qualified for use by petitioning the Code Committee for approval. Complete information shall be supplied to the Code Committee and the Code Committee approval shall be obtained before the material may be used.

423.2 Limitations on Materials

423.2.1 General

(a) The designer shall give consideration to the significance of temperature on the performance of the material.

(b) Selection of material to resist deterioration in service is not within the scope of this Code. It is the designer's responsibility to select materials suitable for the fluid service under the intended operating conditions. An example of a source of information on materials performance in corrosive environments is the *Corrosion Data Survey* published by the National Association of Corrosion Engineers.

423.2.3 Steel. Steels for pipe are shown in Table 423.1 (except as noted in para. 423.2.5).

423.2.4 Cast, Malleable, and Wrought Iron

(a) Cast, malleable, and wrought iron shall not be used for pressure containing parts except as provided in paras. 407.1(a), 407.1(b), and 423.2.4(b).

(b) Cast, malleable, and wrought iron are acceptable in pressure vessels and other equipment noted in para. 400.1.2(b) and in proprietary items [see para. 400.1.2(g)], except that pressure containing parts shall be limited to pressures not exceeding 250 psi (17 bar).

423.2.5 Materials for Liquid Anhydrous Ammonia Pipeline Systems. Only steel conforming to specifications listed in Appendix A shall be used for pressure containing piping components and equipment in liquid anhydrous ammonia pipeline systems. However, internal parts of such piping components and equipment may be made of other materials suitable for the service.

The longitudinal or spiral weld of electric resistance welded and electric induction welded pipe shall be normalized.

Cold formed fittings shall be normalized after fabrication.

Except for the quantities permitted in steels by individual specifications for steels listed in Appendix A, the use of copper, zinc, or alloys of these metals is prohibited for all pressure piping components subject to a liquid anhydrous ammonia environment.

423.2.6 Materials for Carbon Dioxide Piping Systems. Blow down and bypass piping in carbon dioxide pipelines shall be of a material suitable for the low temperatures expected.

425 MATERIALS APPLIED TO MISCELLANEOUS PARTS

425.3 Gaskets

Limitations on gasket materials are covered in para. 408.4.

425.4 Bolting

Limitations on bolting materials are covered in para. 408.5.

TABLE 423.1
MATERIAL STANDARDS

Standard or Specification	Designation
Pipe	
Pipe, Steel, Black & Hot-Dipped, Zinc-Coated Welded & Seamless	ASTM A 53
Seamless Carbon Steel Pipe for High-Temperature Service	ASTM A 106
Pipe, Steel, Electric-Fusion (Arc)-Welded (Sizes NPS 16 and Over)	ASTM A 134
Electric-Resistance-Welded Steel Pipe	ASTM A 135
Electric-Fusion (Arc)-Welded Steel Pipe (NPS 4 and Over)	ASTM A 139
Seamless and Welded Steel Pipe for Low Temperature Service	ASTM A 333
Metal-Arc-Welded Steel Pipe for Use with High-Pressure Transmission Systems	ASTM A 381
Seamless Carbon Steel Pipe for Atmospheric and Lower Temperatures	ASTM A 524
General Requirements for Specialized Carbon and Alloy Steel Pipe	ASTM A 530
Electric-Fusion-Welded Steel Pipe for Atmospheric and Lower Temperatures	ASTM A 671
Electric-Fusion-Welded Steel Pipe for High-Pressure Service at Moderate Temperatures	ASTM A 672
Line Pipe	API 5L
Fittings, Valves, and Flanges	
Pipe Flanges and Flanged Fittings	ASME B16.5
Forgings, Carbon Steel, for Piping Components	ASTM A 105
Gray Iron Castings for Valves, Flanges, and Pipe Fittings	ASTM A 126
Forgings, Carbon Steel, for General-Purpose Piping	ASTM A 181
Forged or Rolled Alloy-Steel Pipe Flanges, Forged Fittings, and Valves and Parts for High-Temperature Service	ASTM A 182
Steel Castings, Carbon, Suitable for Fusion Welding, for High Temperature Service	ASTM A 216
Steel Castings, Martensitic Stainless and Alloy, for Pressure Containing Parts, Suitable for High-Temperature Service	ASTM A 217
Piping Fittings of Wrought Carbon Steel and Alloy Steel for Moderate and Elevated Temperatures	ASTM A 234
Forgings, Carbon and Low-Alloy Steel, Requiring Notch Toughness Testing for Piping Components	ASTM A 350
Ferritic Ductile Iron Pressure-Retaining Castings for Use at Elevated Temperatures	ASTM A 395
Piping Fittings of Wrought Carbon Steel and Alloy Steel for Low Temperature Service [Note (1)]	ASTM A 420
Steel Castings Suitable for Pressure Service	ASTM A 487
Forgings, Carbon and Alloy Steel, for Pipe Flanges, Fittings, Valves, and Parts for High-Pressure Transmission Service	ASTM A 694
Wellhead Equipment	API 6A
Pipeline Valves, End Closures, Connectors and Swivels	API 6D
Steel Gate Valves, Flanged and Buttwelding Ends	API 600
Compact Carbon Steel Gate Valves	API 602
Class 150, Corrosion Resistant Gate Valves	API 603
Quality Standard for Steel Castings for Valves, Flanges and Fittings and Other Piping Components	MSS SP-55
Specification For High Test Wrought Welding Fittings	MSS SP-75
Bolting	
Alloy-Steel and Stainless Steel Bolting Materials for High-Temperature Service	ASTM A 193
Carbon and Alloy Steel Nuts for Bolts for High-Pressure and High-Temperature Service	ASTM A 194
Carbon Steel Externally Threaded Standard Fasteners	ASTM A 307
Alloy Steel Bolting Materials for Low-Temperature Service	ASTM A 320
High-Strength Bolts for Structural Steel Joints	ASTM A 325
Quenched and Tempered Alloy Steel Bolts, Studs, and Other Externally Threaded Fasteners	ASTM A 354
Quenched and Tempered Steel Bolts and Studs	ASTM A 449

(continued)

TABLE 423.1
MATERIAL STANDARDS (CONT'D)

Standard or Specification	Designation
Bolting (Cont'd)	
Heat Treated Steel Structural Bolts, 150 ksi (1035 MPa) Minimum Tensile Strength	ASTM A 490
Structural Materials	
General Requirements for Rolled Steel Plates, Shapes, Sheet Piling, and Bars for Structural Use	ASTM A 6
General Requirements for Steel Plates for Pressure Vessels	ASTM A 20
General Requirements for Steel Bars, Carbon and Alloy, Hot-Wrought and Cold-Finished	ASTM A 29
Structural Steel	ASTM A 36
Pressure Vessel Plates, Alloy Steel, Manganese-Vanadium	ASTM A 225
High-Strength Low-Alloy Structural Steel	ASTM A 242
Low and Intermediate Tensile Strength Carbon Steel Plates, and Bars	ASTM A 283
Pressure Vessel Plates, Carbon Steel, Low- and Intermediate-Tensile Strength	ASTM A 285
High-Strength Low-Alloy Structural Manganese Vanadium Steel	ASTM A 441
Pressure Vessel Plates, Carbon Steel, Improved Transition Properties	ASTM A 442
General Requirements for Steel Sheet and Strip, Alloy, Hot-Rolled and Cold-Rolled	ASTM A 505
Steel Sheet and Strip, Alloy, Hot-Rolled and Cold-Rolled, Regular Quality	ASTM A 506
Steel Sheet and Strip, Alloy, Hot-Rolled and Cold-Rolled, Drawing Quality	ASTM A 507
High-Yield-Strength, Quenched and Tempered Alloy Steel Plate, Suitable for Welding	ASTM A 514
Pressure Vessel Plates, Carbon Steel, for Intermediate- and Higher-Temperature Service	ASTM A 515
Pressure Vessel Plates, Carbon Steel, for Moderate- and Lower-Temperature Service	ASTM A 516
Pressure Vessel Plates, Alloy Steel, High-Strength, Quenched and Tempered	ASTM A 517
Pressure Vessel Plates, Heat Treated, Carbon-Manganese-Silicon Steel	ASTM A 537
High-Strength Low-Alloy Columbium-Vanadium Steels of Structural Quality	ASTM A 572
Structural Carbon Steel Plates of Improved Toughness	ASTM A 573
Steel Bars, Carbon, Merchant Quality, M-Grades	ASTM A 575
Steel Bars, Carbon, Hot-Wrought, Special Quality	ASTM A 576
Normalized High-Strength Low-Alloy Structural Steel	ASTM A 633
Steel Bars, Carbon, Merchant Quality, Mechanical Properties	ASTM A 663
Steel Bars, Carbon, Hot-Wrought, Special Quality, Mechanical Properties	ASTM A 675
Miscellaneous	
Pipe Hangers and Support Materials, Design and Manufacture	MSS SP-58

GENERAL NOTE:
Specific editions of standards incorporated in this Code by reference, and the names and addresses of the sponsoring organizations, are shown in Appendix A, since it is not practical to refer to a specific edition of each standard in Table 423.1 and throughout the Code text. Appendix A will be revised at intervals as needed, and issued in Addenda to the Code.

NOTE:
(1) A 420 Grade WPL9 is not recommended for anhydrous ammonia due to copper content.

CHAPTER IV
DIMENSIONAL REQUIREMENTS

426 DIMENSIONAL REQUIREMENTS FOR STANDARD AND NONSTANDARD PIPING COMPONENTS

426.1 Standard Piping Components

Dimensional standards for piping components are listed in Table 426.1. Also, certain material specifications listed in Table 423.1 contain dimensional requirements which are requirements of para. 426. Dimensions of piping components shall comply with these standards and specifications unless the provisions of para. 426.2 are met.

426.2 Nonstandard Piping Components

The dimensions for nonstandard piping components shall be such as to provide strength and performance equivalent to standard components or as provided under para. 404. Wherever practical, these dimensions shall conform to those of comparable standard components.

426.3 Threads

The dimensions of all piping connection threads, not otherwise covered by a governing component standard or specification, shall conform to the requirements of the applicable standards listed in Table 426.1 (see para. 414.1).

TABLE 426.1
DIMENSIONAL STANDARDS

Standard or Specification	Designation
Pipe	
Welded and Seamless Wrought Steel Pipe	ASME B36.10M
Stainless Steel Pipe	ASME B36.19M
Line Pipe (*Combination of former API Spec. 5L, 5LS, and 5LX*)	API 5L
Fittings, Valves, and Flanges	
Pipe Flanges and Flanged Fittings	ASME B16.5
Factory-Made Wrought Steel Buttwelding Fittings	ASME B16.9
Face-to-Face and End-to-End Dimensions of Valves	ASME B16.10
Metallic Gaskets for Pipe Flanges — Ring Joint, Spiral-Wound, and Jacketed	ASME B16.20
Nonmetallic Flat Gaskets for Pipe Flanges	ASME B16.21
Buttwelding Ends	ASME B16.25
Wrought Steel Buttwelding Short Radius Elbows and Returns	ASME B16.28
Wellhead Equipment	API 6A
Pipeline Valves, End Closures, Connectors and Swivels	API 6D
Steel Gate Valves, Flanged and Buttwelding Ends	API 600
Compact Carbon Steel Gate Valves	API 602
Class 150, Corrosion Resistant Gate Valves	API 603
Standard Finishes for Contact Faces of Pipe Flanges and Connecting-End Flanges of Valves and Fittings	MSS SP-6
Standard Marking System for Valves, Fittings, Flanges and Unions	MSS SP-25
Steel Pipe Line Flanges	MSS SP-44
Pressure Testing of Steel Valves	MSS SP-61
Butterfly Valves	MSS SP-67
Cast Iron Gate Valves, Flanged and Threaded Ends	MSS SP-70
Cast Iron Swing Check Valves, Flanged and Threaded Ends	MSS SP-71
Specification for High Test Wrought Welding Fittings	MSS SP-75
Cast Iron Plug Valves, Flanged and Threaded Ends	MSS SP-78
Miscellaneous	
Unified Incn Screw Threads (UN and UNR Thread Form)	ASME B1.1
Pipe Threads, General Purpose (Inch)	ASME B1.20.1
Dry Seal Pipe Threads (Inch)	ASME B1.20.3
Threading, Gaging, and Thread Inspection of Casing, Tubing, and Line Pipe Threads	API 5B
Pipe Hangers and Supports—Selection and Application	MSS SP-69

GENERAL NOTE: Specific editions of standards incorporated in this Code by reference, and the names and addresses of the sponsoring organizations, are shown in Appendix A, since it is not practical to refer to a specific edition of each standard in Table 426.1 and throughout the Code text. Appendix A will be revised at intervals as needed, and issued in Addenda to the Code.

CHAPTER V
CONSTRUCTION, WELDING, AND ASSEMBLY

434 CONSTRUCTION

434.1 General

New construction and replacements of existing systems shall be in accordance with the requirements of this Chapter. Where written specifications are required, they shall be in sufficient detail to insure that the requirements of this Code shall be met. Such specifications shall include specific details on handling of pipe, equipment, materials, welding, and all construction factors which contribute to safety and sound engineering practice. It is not intended herein that all construction items be covered in full detail, since the specification should be all-inclusive. Whether covered specifically or not, all construction and materials shall be in accordance with good engineering, safety, and proven pipeline practice.

434.2 Inspection

The operating company shall make provision for suitable inspection of pipeline and related facilities by qualified inspectors to assure compliance with the construction specifications. Qualification of inspection personnel and the type and extent of inspection shall be in accordance with the requirements of para. 436. Repairs required during new construction shall be in accordance with paras. 434.5, 434.8, and 461.1.2.

434.3 Right of Way

434.3.1 Location. Right of way should be selected so as to minimize the possibility of hazard from future industrial or urban development or encroachment on the right of way.

434.3.2 Construction Requirements. Inconvenience to the landowner should be a minimum and safety of the public shall be given prime consideration.

(a) All blasting shall be in accordance with governing regulations and shall be performed by competent and qualified personnel, and performed so as to provide adequate protection to the general public, livestock, wildlife, buildings, telephone, telegraph, and power lines, underground structures, and any other property in the proximity of the blasting.

(b) In grading the right of way, every effort shall be made to minimize damage to the land and prevent abnormal drainage and erosive conditions. The land is to be restored to as nearly original condition as is practical.

(c) In constructing pipeline crossings of railroads, highways, streams, lakes, rivers, etc., safety precautions such as signs, lights, guard rails, etc., shall be maintained in the interest of public safety. The crossings shall comply with the applicable rules, regulations, and restrictions of regulatory bodies having jurisdiction.

434.3.3 Survey and Staking or Marking. The route shall be surveyed and staked, and such staking or marking should be maintained during construction, except route of pipeline offshore shall be surveyed and the pipeline shall be properly located within the right of way by maintaining survey route markers or by surveying during construction.

434.4 Handling, Hauling, Stringing, and Storing

Care shall be exercised in the handling or storing of pipe, casing, coating materials, valves, fittings, and other materials to prevent damage. When applicable, railroad transportation of pipe shall meet the requirements of API RP 5L1. In the event pipe is yard coated or mill coated, adequate precautions shall be taken to prevent damage to the coating when hauling, lifting, and placing on the right of way. Pipe shall not be allowed to drop and strike objects which will distort, dent, flatten, gouge, or notch the pipe or damage the coating, but shall be lifted or lowered by suitable and safe equipment.

434.5 Damage to Fabricated Items and Pipe

(a) Fabricated items such as scraper traps, manifolds, volume chambers, etc., shall be inspected before assembly into the mainline or manifolding and defects shall be repaired in accordance with provisions of the standard or specification applicable to their manufacture.

(b) Pipe shall be inspected before coating and before

assembly into the mainline or manifolding. Distortion, buckling, denting, flattening, gouging, grooves, or notches, and all defects of this nature, shall be prevented, repaired, or eliminated as specified herein.

(1) Injurious gouges, grooves, or notches shall be removed. These defects may be repaired by the use of welding procedures prescribed in API 5L or removed by grinding, provided the resulting wall thickness is not less than that permitted by the material specification.

(2) When conditions outlined in para. 434.5(b)(1) cannot be met, the damaged portion shall be removed as a cylinder. Insert patching is not permitted. Weld-on patching, other than complete encirclement, is not permitted in pipelines intended to operate at a hoop stress of more than 20% of the specified minimum yield strength of the pipe.

(3) Notches or laminations on pipe ends shall not be repaired. The damaged end shall be removed as a cylinder and the pipe end properly rebeveled.

(4) Distorted or flattened lengths shall be discarded.

(5) A dent (as opposed to a scratch, gouge, or groove) may be defined as a gross disturbance in the curvature of the pipe wall. A dent containing a stress concentrator, such as a scratch, gouge, groove, or arc burn, shall be removed by cutting out the damaged portion of the pipe as a cylinder.

(6) All dents which affect the curvature of the pipe at the seam or at any girth weld shall be removed as in para. 434.5(b)(5). All dents which exceed a maximum depth of ¼ in. (6 mm) in pipe NPS 4 and smaller, or 6% of the nominal pipe diameter in sizes greater than NPS 4, shall not be permitted in pipelines intended to operate at a hoop stress of more than 20% of the specified minimum yield strength of the pipe. Insert patching, overlay, or pounding out of dents shall not be permitted in pipelines intended to operate at a hoop stress of more than 20% of the specified minimum yield strength of the pipe.

(7) Buckled pipe shall be replaced as a cylinder.

434.6 Ditching

(a) Depth of ditch shall be appropriate for the route location, surface use of the land, terrain features, and loads imposed by roadways and railroads. All buried pipelines shall be installed below the normal level of cultivation and with a minimum cover not less than that shown in Table 434.6(a). Where the cover provisions of Table 434.6(a) cannot be met, pipe may be installed with less cover if additional protection is provided to withstand anticipated external loads and to minimize damage to the pipe by external forces.

(b) Width and grade of ditch shall provide for lowering of the pipe into the ditch to minimize damage to the coating and to facilitate fitting the pipe to the ditch.

(c) Location of underground structures intersecting the ditch route shall be determined in advance of construction activities to prevent damage to such structures. A minimum clearance of 12 in. (0.3 m) shall be provided between the outside of any buried pipe or component and the extremity of any other underground structures, except for drainage tile which shall have a minimum clearance of 2 in. (50 mm), and as permitted under para. 461.1.1(c).

(d) Ditching operations shall follow good pipeline practice and consideration of public safety. API RP 1102 will provide additional guidance.

434.7 Bends, Miters, and Elbows

Changes in direction, including sags or overbends required to conform to the contour of the ditch, may be made by bending the pipe or using miters, factory made bends, or elbows. [See limitations in para. 406.2.]

434.7.1 Bends Made From Pipe

(a) Bends shall be made from pipe having wall thicknesses determined in accordance with para. 404.2.1. When hot bends are made in pipe which has been cold worked in order to meet the specified minimum yield strength, wall thicknesses shall be determined by using the lower stress values in accordance with para. 402.3.1(d).

(b) Bends shall be made in such a manner as to preserve the cross-sectional shape of the pipe, and shall be free from buckling, cracks, or other evidence of mechanical damage. The pipe diameter shall not be reduced at any point by more than 2½% of the nominal diameter, and the completed bend shall pass the specified sizing pig.

(c) The minimum radius of field cold bends shall be as specified in para. 406.2.1(b).

(d) Tangents approximately 6 ft (2 m) in length are preferred on both ends of cold bends.

434.7.2 Mitered Bends

(a) Mitered bends are permitted subject to limitations in para. 406.2.2.

(b) Care shall be taken in making mitered joints to provide proper spacing and alignment and full penetration welds.

434.7.3 Factory Made Bends and Elbows

(a) Factory made wrought steel welding bends and

TABLE 434.6(a)
MINIMUM COVER FOR BURIED PIPELINES

Location	For Normal Excavation, in. (m) [Note (1)]	For Rock Excavation Requiring Blasting or Removal by Equivalent Means, in. (m)
Industrial, commercial, and residential areas	36 (0.9)	24 (0.6)
River and stream crossings	48 (1.2)	18 (0.45)
Drainage ditches at roadways and railroads	36 (0.9)	24 (0.6)
Any other area	30 (0.75)	18 (0.45)

NOTE:
(1) Minimum cover for pipelines transporting carbon dioxide, LPG, or liquid anhydrous ammonia shall be: 48 in. (1.2 m) for normal excavation in industrial, commercial, and residential areas, river and stream crossings, and drainage ditches at roadways and railroads; and 36 in. (0.9 m) for normal excavation in any other area.

factory made elbows may be used subject to limitations in para. 406.2.3,and transverse segments cut therefrom may be used for changes in direction provided the arc distance measured along the crotch is at least 2 in. (50 mm) on pipe size NPS 4 and larger.

(b) If the internal diameter of such fittings differs by more than $^3/_{16}$ in. (5 mm) from that of the pipe, the fitting shall be treated as indicated in Fig. 434.8.6(a)-(2) or use a transition nipple not less than one-half pipe diameter in length with acceptable joint designs as illustrated in Fig. 434.8.6(a)-(2).

02 **434.8 Welding**

434.8.1 General

(a) Scope. Welding herein applies to the arc and gas welding of pipe in both wrought and cast steel materials as applied in pipelines and connections to apparatus or equipment. This includes butt joints in the installation of pipe, valves, flanges, fittings, and other equipment, and fillet welded joints in pipe branches, slip-on flanges, etc. It does not apply to the welding of longitudinal or spiral joints in the manufacture of pipe, fittings, and valves, or to pressure vessels or assemblies manufactured in accordance with the ASME Boiler and Pressure Vessel Code, Section VIII, Division 1 or 2.

(b) Welding Terms. Definitions pertaining to welding as used in this Code conform to the standard definitions established by the American Welding Society and contained in ANSI/AWS A3.0, Section IX of the ASME Boiler and Pressure Vessel Code, and API 1104.

(c) Safe Practices in Cutting and Welding. Prior to cutting and welding in areas in which the possible leakage or presence of vapor or flammable liquid constitutes a hazard of fire or explosion, a thorough check shall be made to determine the presence of a combustible gas mixture or flammable liquid. Cutting and welding shall begin only when safe conditions are indicated.

434.8.2 Welding Processes and Filler Metal

(a) Welding shall be performed by a manual, semiautomatic, or automatic process or combination of processes that have been demonstrated to produce sound welds.

(b) Unless otherwise specified by the operating company, welding electrodes and consumables shall comply with the following:

(1) Filler metal and consumables shall be selected so that the strength of the completed weldment will equal or exceed the specified minimum tensile strength of the materials being joined.

(2) If base metals of different tensile strengths are to be joined, the nominal tensile strength of the weld metal shall equal or exceed the tensile strength of the weaker of the two.

(3) When filler metals of different strenghts are used in a single weld, the proportions shall be such that the completed weldment equals the specified minimum tensile strength of the base metal.

(4) For alloy steels, the nominal chemical analysis of the weld metal shall be the same as the nominal chemical analysis of the base metal. If base metals of different chemical analysis are being joined, the weld metal shall be the same as eitehr base metal, or of intermediate composition, except as specified below.

(5) When austenitic steels are joined to ferritic steels, the weld metal shall have an austenitic structure.

434.8.3 Welder and Welding Procedure Qualifications

(a) Welder and welding procedure qualifications for cross country pipelines shall be performed in accordance with API 1104. Welder and welding procedure qualifications for alloy steel and for shop fabricated piping assemblies, and welding at stations and terminals shall be performed in accordance with API 1104 or Section IX of the ASME Boiler and Pressure Vessel Code.

(b) Prior to any welding covered by this Code, a welding procedure specification shal be established and qualified by testing to demonstrate that welds having suitable mechanical properties and soundness can be produced. Welding procedure specifications and each welder or welding operator shall be qualified as required by API 1104, or Section IX of the ASME Boiler and Pressure Vessel Code, whichever is appropriate for the locations, materials, and type of welding to be performed. The welding procedure specification shall be adhered to during welding performed under this Code.

(c) The welding procedure specifications shall at a minimum include the information required by API 1104 or Section IX of the ASME Boiler and Pressure Vessel Code. When materials, welding consumables, mechanical restraint, service conditions and/or weather conditions make more details necessary to produce a sound weld, such as preheat, interpass temperature, and post-weld heat treatment, such details shall be provided. When joining materials with notch-toughness requirements, particularly for low temperature service, consideration shall be given to weld metal and heat-affected zone toughness requirements in the welding procedure specification. When applicable, the test method, temperature, specimen, and acceptance criteria shall be specified in the welding procedure specification.

(d) API 1104 and Section IX of the ASME Boiler and Pressure Vessel Code contain sections entitled "Essential Variables" applicable to welding procedure specifications, procedure qualification records, and welder qualifications. The classification of base materials and weld filler materials into groups does not imply that other materials within a particular group may be indiscriminately substituted for the base material or weld filler material used for the qualificaition test. Welding procedure qualification tests should be conducted with the highest strength base metal to be welded in the essential variable groups identified in the procedure specification.

(e) Welder requalification tests are required if there is some specific reason to question a welder's ability or if the welder is not engaged in a given process of welding for a period of six months or more.

(f) The operating company shall be responsible for qualifications of procedures and welders. The preparation of welding procedure specifications and/or performance of welding qualification tests may be delegated to others; however, each company that performs welding activities is responsible for the welding activities performed by its employees and contractors.

(g) Qualification Records. The welding procedure followed during the qualifying tests shall be recorded in detail. Records of the tests that establish the qualification of a welding procedure specification shall be retained as long as that procedure is in use. A record of the welders qualified, showing the date and results of the tests, shall be retained during the construction involved and for six months thereafter.

434.8.4 Welding Standards. All the welding done under this Code shall be performed under a specification which embodies the minimum requirements of this Code and shall encompass the requirements of API 1104 except as provided in paras. 434.8.3(a) and (b).

434.8.5 Required Inspection and Acceptance Criteria

(a) Required Inspection

(1) The quality of welding shall be checked by visual inspection and supplemental nondestructive methods or by removing completed welds as selected and designated by the inspector for destructive testing.

(2) All welds shall be visually inspected.

(3) When the pipeline is to be operated at a hoop stress of more than 20% of the specified minimum yield strength of the pipe, girth welds shall be inspected. A minimum of 10% of the girth welds completed each day shall be randomly selected by the operating company and inspected. The inspection shall be by radiographic or other accepted volumetric nondestructive methods. Each weld inspected shall be inspected completely around its circumference. In the following locations or conditions, all girth welds in the pipe shall be completely inspected; however, if some of the girth welds are inaccessible, a minimum of 90% of the welds are to be inspected.

(a) within populated areas such as residential subdivisions, shopping centers, and designated commercial and industrial areas;

(b) river, lake, and stream crossings within the area subject to frequent inundation; and river, lake, and stream crossings on bridges;

(c) railroad or public highway rights of way, including tunnels, bridges, and overhead railroad and road crossings;

(d) offshore and inland coastal waters;

(e) old girth welds in used pipe;

(f) tie-in girth welds not hydrostatically tested in accordance with para. 437.4.1.

(b) Inspection Methods and Acceptance Standards

(1) Nondestructive inspection shall consist of visual inspection and radiographic examination or other acceptable nondestructive methods, and shall be in

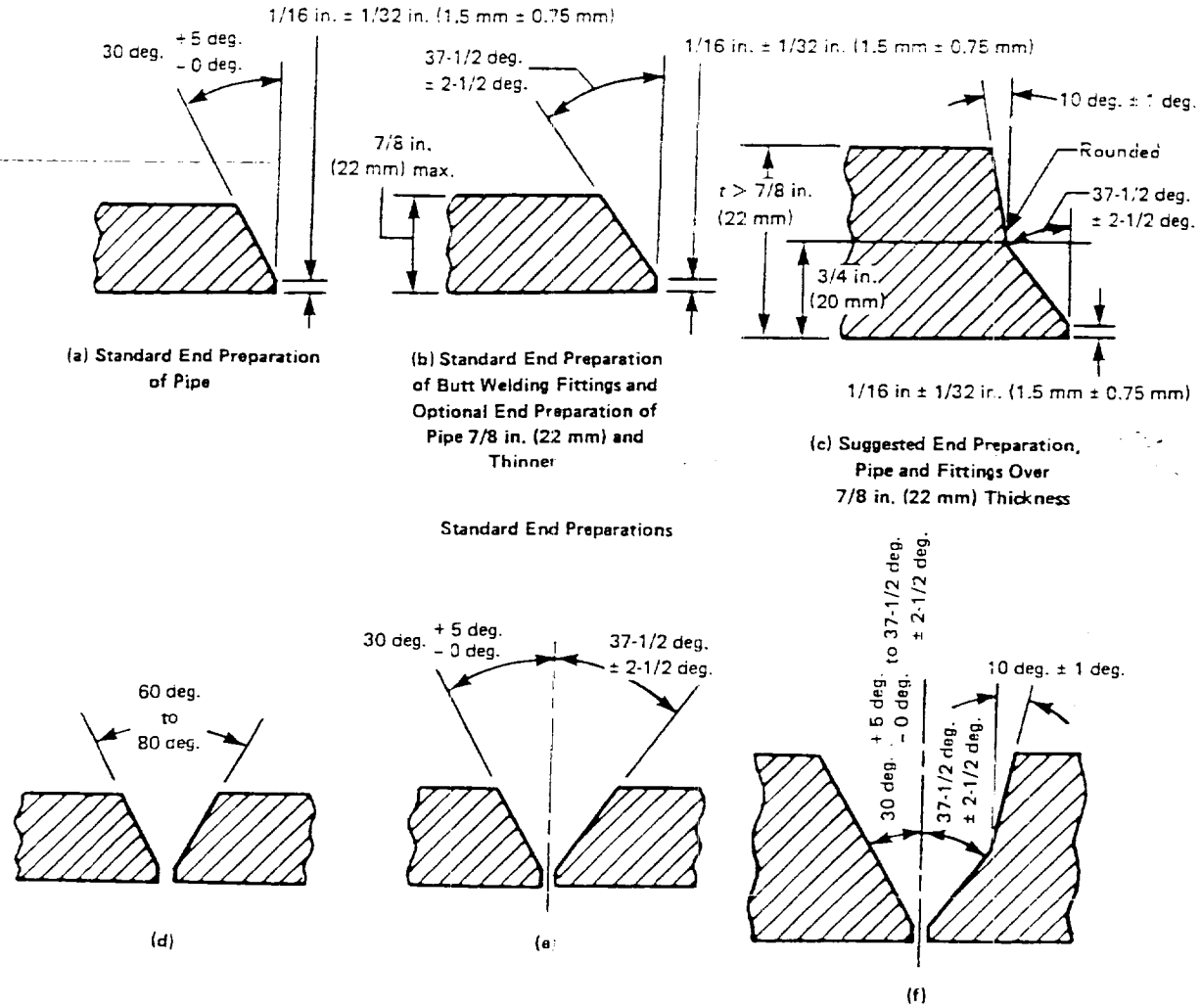

FIG. 434.8.6(a)-(1) ACCEPTABLE BUTT WELDED JOINT DESIGN FOR EQUAL WALL THICKNESSES

accordance with API 1104. The methods used shall be capable of producing indications of potential defects that can be accurately interpreted and evaluated. Welds shall meet the acceptance standards for discontinuities contained in API 1104, or the alternate acceptance standards for girth welds in Appendix A of API 1104.

(2) Completed welds which have been removed for destructive examination shall meet the requirements of API 1104 for Welder Qualification by Destructive Testing. Trepanning methods of testing shall not be used.

434.8.6 Types of Welds, Joint Designs, and Transition Nipples

(a) Butt Welds. Butt welded joints may be of the single vee, double vee, or other suitable type of groove. Joint designs shown in Fig. 434.8.6(a)-(1) or applicable combinations of these joint design details are recommended for ends of equal thickness. The transition between ends of unequal thickness may be accomplished by taper or welding as shown in Fig. 434.8.6(a)-(2), or by means of a prefabricated transition nipple not less than one-half pipe diameter in length with acceptable joint designs as illustrated in Fig. 434.8.6(a)-(2).

(b) Fillet Welds. Fillet welds may be concave to slightly convex. The size of a fillet weld is stated as a leg length of the largest inscribed right isosceles triangle as shown in Fig. 434.8.6(b) covering recommended attachment details of flanges.

(c) Tack Welds. Tack welding shall be done by qualified welders, the same as all other welds.

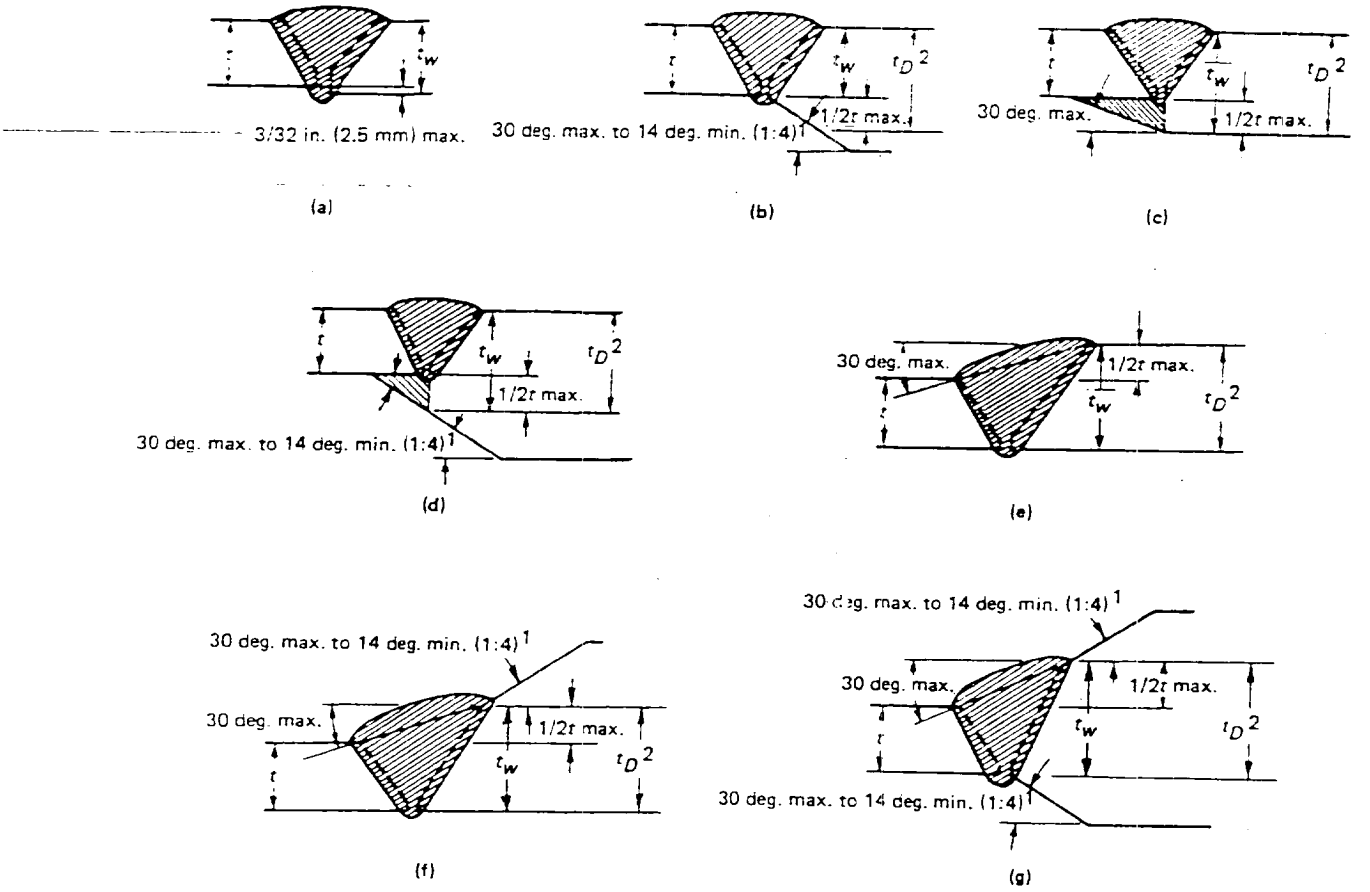

Notes to follow on next page.

FIG. 434.8.6(a)-(2) ACCEPTABLE BUTT WELDED JOINT DESIGN FOR UNEQUAL WALL THICKNESSES

434.8.7 Removal or Repair of Defects

(a) Arc Burns. Arc burns can cause serious stress concentrations in pipelines and shall be prevented, removed, or repaired. The metallurgical notch caused by arc burns shall be removed by grinding, provided the grinding does not reduce the remaining wall thickness to less than the minimum permitted by the material specifications. Complete removal of the metallurgical notch created by an arc burn can be determined as follows. After visible evidence of the arc burn has been removed by grinding, swab the ground area with a minimum 10% solution of ammonium persulfate or a 5% solution of nital. A darkened spot is evidence of a metallurgical notch and indicates that additional grinding is necessary. If the resulting wall thickness after grinding is less than that permitted by the material specification, the portion of pipe containing the arc burn shall be removed or repaired in accordance with para. 451.6. Insert patching is prohibited.

(b) Weld Defects. Authorization for repair of welds, removal and repair of weld defects, and testing of weld repairs shall be in accordance with API 1104.

(c) Pipe Defects. Laminations, split ends, or other defects in the pipe shall be repaired or removed in accordance with para. 434.5(b).

434.8.8 Preheating and Interpass Temperature

(a) The welding procedure specification shall specify the minimum preheat temperature. When the welding procedure specification specifies preheating above ambient temperatures, the method of heating shall be specified. For heat treated and other high strength materials and impact tested materials, control of interpass temperatures may be necessary. The operating company shall

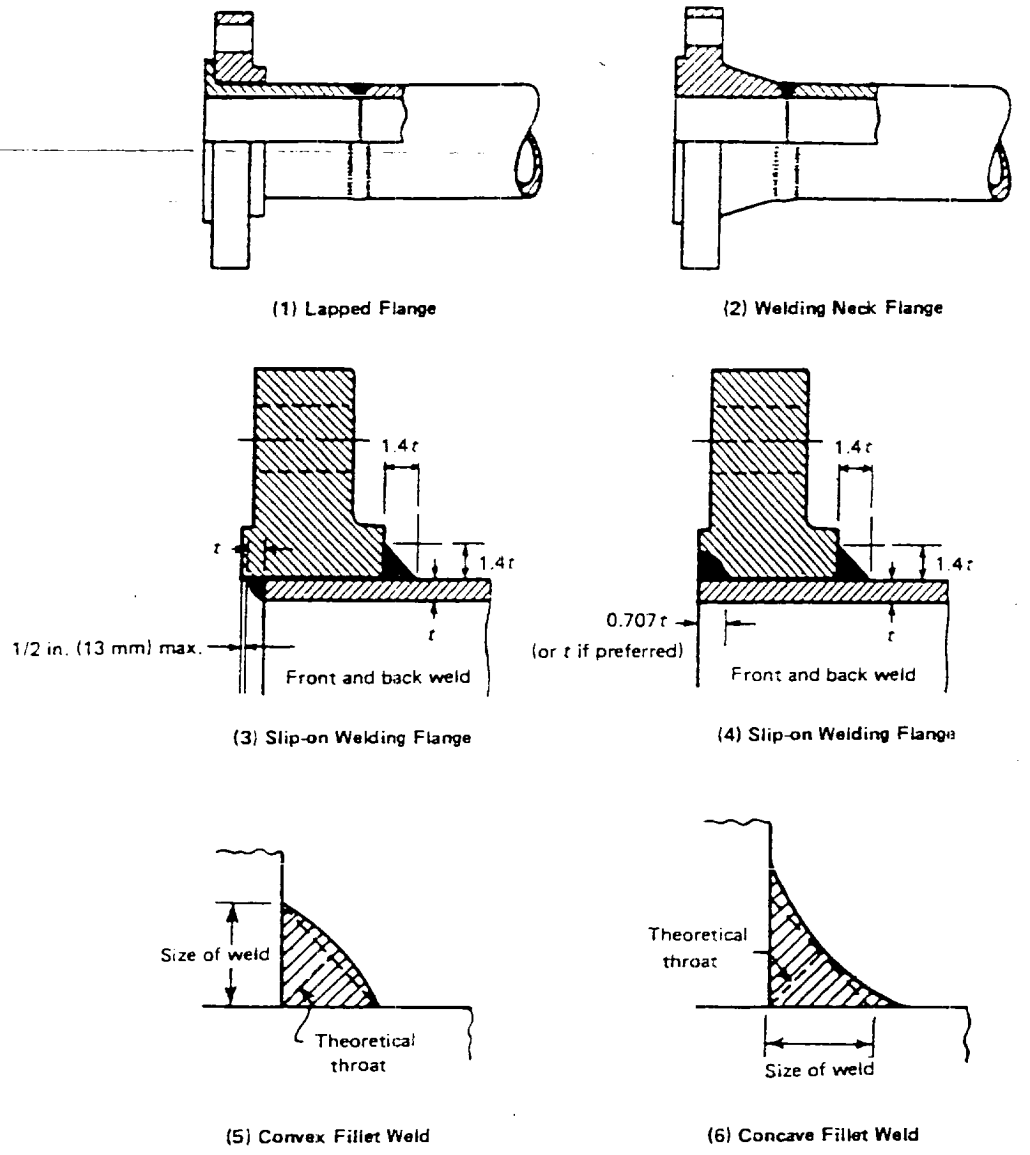

FIG. 434.8.6(b) RECOMMENDED ATTACHMENT DETAILS OF FLANGES

determine when interpass temperature limits are necessary, and, when required, the interpass temperatures shall be provided in the welding procedure specification.

(b) When welding dissimilar materials having different preheating requirements, the material requiring the higher preheat shall govern.

(c) The preheating temperature shall be checked by the use of temperature indicating crayons, thermocouple pyrometers, or other suitable method to assure that the required temperature is attained prior to and maintained during the welding operation.

434.8.9 Stress Relieving

(a) Welds shall be stress relieved when the effective weld throat [see Fig. 434.8.6(a)-(2)] exceeds $1\frac{1}{4}$ in. (32 mm), unless it can be demonstrated by welding procedure qualification tests, using materials of the same specification, type, and grade with an effective weld throat that is equal to or greater than the production weld, that stress relieving is not necessary.

Welds in carbon steels having an effective weld throat larger than $1\frac{1}{4}$ in. (32 mm) and not larger than $1\frac{1}{2}$ in. (38 mm) may be exempted from stress relieving

if a minimum preheating temperature of 200°F (93°C) is used. The welding procedure specification shall specify when stress relieving and/or heat treatment are required due to composition, thickness, welding process, restraint of the weld joint, or service conditions. When required, the welding procedure qualification test shall include stress relieving and/or heat treatment of the completed test joint. The postweld stress relieving and heat treatment requirements in ASME B31.3 or Section VIII, Division 1 or 2 of the ASME Boiler and Pressure Vessel Code may be used as a guide for minimum stress relieving and heat treating requirements. The thickness to be used to determine the stress relieving requirements of branch connections or slip-on flanges shall be the thickness of the pipe or header.

The thickness to be used to determine the stress relieving requirements of branch connections or slip-on flanges shall be the thickness of the pipe or header.

(b) In welds between dissimilar materials, if either material requires stress relieving, the joint shall require stress relieving.

434.9 Tie-In

Gaps left in the continuous line construction at such points as river, canal, highway, or railroad crossings require special consideration for alignment and welding. Sufficient equipment shall be available and care exercised not to force or strain the pipe to proper alignment.

434.10 Installation of Pipe in the Ditch

It is very important that stresses induced into the pipeline by construction be minimized. The pipe shall fit the ditch without the use of external force to hold it in place until the backfill is completed. When the pipe is lowered into the ditch, care shall be exercised so as not to impose undue stress in the pipe. Slack loops may be used where laying conditions render their use advisable.

434.11 Backfilling

Backfilling shall be performed in a manner to provide firm support of the pipe. When there are large rocks in the backfill material, care shall be exercised to prevent damage to the pipe and coating by such means as the use of a rock shield material, or by making the initial fill with a rock-free material sufficient to prevent rock damage. Where the ditch is flooded, care shall be exercised so that the pipe is not floated from the bottom of the ditch prior to backfill completion.

434.12 Restoration of Right of Way and Cleanup

These operations shall follow good construction practices and considerations of private and public safety.

434.13 Special Crossings

Water, railroad, and highway crossings require specific considerations not readily covered in a general statement, since all involve variations in basic design. The pipeline company shall obtain required permits for such crossings. The design shall employ sound engineering and good pipeline practice with minimum hazard to the facility and due consideration of public safety. Construction shall be so organized as to result in minimal interference with traffic or the activities of adjacent property owners. Adequate efforts shall be made to determine the location of buried pipelines, utility lines, and other underground structures along and crossing the proposed right of way. The owners of any affected structures shall be given adequate prior notice of the proposed construction so that the owner may make operational preparations and provide a representative at the crossing.

434.13.1 Water Crossings. Crossings of rivers, streams, lakes, and inland bodies of water are individual problems, and the designer shall investigate composition of bottom, variation in banks, velocity of water, scouring, and special seasonal problems. The designer shall determine whether the crossing is to be underwater, overhead on a suspension bridge, or supported on an adjacent bridge. Continuity of operation and the safety of the general public shall be the controlling factors both in design and in construction. Where required, detailed plans and specifications shall be prepared taking into account these and any special considerations or limitations imposed by the regulatory body involved.

(a) Underwater Construction. Plans and specifications shall describe the position of the line, showing relationship of the pipeline to the natural bottom and the depth below mean low water level when applicable. To meet the conditions set out in para. 434.13.1, heavier wall pipe may be specified. Approach and position of the line in the banks is important, as is the position of the line across the bottom. Special consideration shall be given to depth of cover and other means of protecting the pipeline in the surf zone. Special consideration shall be given to protective coating and the use of concrete jacketing or the application of river weights. Complete inspection shall be provided. Precautions shall be taken during construction to limit stress below the level that would produce buckling

or collapse due to out-of-roundness of the completed pipeline.

434.13.2 Overhead Structures. Overhead structures used to suspend pipelines shall be designed and constructed on the basis of sound engineering and within the restrictions or regulations of the governing body having jurisdiction. Detailed plans and specifications shall be prepared where required and adequate inspection shall be provided to assure complete adherence thereto.

434.13.3 Bridge Attachments. Special requirements are involved in this type of crossing. The use of higher strength lightweight steel pipe, proper design and installation of hangers, and special protection to prevent damage by the elements or bridge and approach traffic shall be considered. Any agreed upon restrictions or precautions shall be contained in the detailed specifications. Inspectors shall assure themselves that these requirements are met.

02 **434.13.4 Railroad and Highway Crossings**

(a) The safety of the general public and the prevention of damage to the pipeline by reason of its location are primary considerations. The great variety of such crossings precludes standard design. The construction specifications shall cover the procedure for such crossings, based upon the requirements of the specific location.

(b) Installation of uncased carrier pipe is preferred. Installation of carrier pipe, or casing if used, shall be in accordance with API RP 1102. As specified in para. 461.1.2(f), if casing is used, coated carrier pipe shall be independently supported outside each end of the casing and insulated from the casing throughout the cased section, and casing ends shall be sealed using a durable, electrically nonconductive material.

(c) The total effective stress due to internal design pressure and external loads (including both live and dead loads) in pipe installed under railroads or highways without use of casing shall be calculated in accordance with API RP 1102 and shall not exceed the allowable effective stress noted in para. 402.3.2(e). Also, cyclic stress components shall be checked for fatigue.

434.14 Inland Coastal Water Construction

Plans and specifications shall describe alignment of the pipeline, depth below mean water level, and depth below bottom if ditched. Special consideration shall be given to depth of cover and other means of protecting the pipeline in the surf zone. Consideration shall be given to use of weight coating(s), anchors, or other means of maintaining position of the pipe under anticipated conditions of buoyance and water motion. Complete construction inspection shall be provided. Precautions shall be taken during construction to limit stress below the level that would produce buckling or collapse due to out-of-roundness of the completed pipeline.

434.15 Block and Isolating Valves

434.15.1 General

(a) Block and isolating valves shall be installed for limiting hazard and damage from accidental discharge and for facilitating maintenance of the piping system.

(b) Valves shall be at accessible locations, protected from damage or tampering, and suitably supported to prevent differential settlement or movement of the attached piping. Where an operating device to open or close the valve is provided, it shall be protected and accessible only to authorized persons.

(c) Submerged valves on pipelines shall be marked or spotted by survey techniques to facilitate quick location when operation is required.

434.15.2 Mainline Valves

(a) Mainline block valves shall be installed on the upstream side of major river crossings and public water supply reservoirs. Either a block or check valve shall be installed on the downstream side of major river crossings and public water supply reservoirs.

(b) A mainline block valve shall be installed at mainline pump stations, and a block or check valve (where applicable to minimize pipeline backflow) shall be installed at other locations appropriate for the terrain features. In industrial, commercial, and residential areas where construction activities pose a particular risk of external damage to the pipeline, provisions shall be made for the appropriate spacing and location of mainline valves consistent with the type of liquids being transported.

(c) A remotely operated mainline block valve shall be provided at remotely controlled pipeline facilities to isolate segments of the pipeline.

(d) On piping systems transporting LPG or liquid anhydrous ammonia, check valves shall be installed where applicable with each block valve to provide automatic blockage of reverse flow in the piping system.

(e) In order to facilitate operational control, limit the duration of an outage, and to expedite repairs, mainline block valves shall be installed at 7.5 mile (12 km) maximum spacing on piping systems transporting LPG or liquid anhydrous ammonia in industrial, commercial, and residential areas.

434.15.3 Pump Station, Tank Farm, and Terminal Valves

(a) Valves shall be installed on the suction and discharge of pump stations whereby the pump station can be isolated from the pipeline.

(b) Valves shall be installed on lines entering or leaving tank farms or terminals at convenient locations whereby the tank farm or terminal may be isolated from other facilities such as the pipeline, manifolds, or pump stations.

434.16 Connections to Main Lines

Where connections to the main line such as branch lines, jump-overs, relief valves, air vents, etc., are made to the main line, they shall be made in accordance with para. 404.3.1. When such connections or additions are made to coated lines, all damaged coating shall be removed and replaced with new coating material in accordance with para. 461.1.2(h). This protective coating should include the attachments.

434.17 Scraper Traps

434.17.1 Scraper traps are to be installed as deemed necessary for good operations. All pipe, valves, fittings, closures, and appurtenances shall comply with appropriate sections of this Code.

434.17.2 Scraper traps on mainline terminations and tied into connection piping or manifolding shall be anchored below ground with adequate concrete anchors when required and suitably supported above ground to prevent transmission of line stresses due to expansion and contraction to connecting facilities.

434.17.3 Scraper trap and its components shall be assembled in accordance with para. 435, and pressure tested to the same limits as the main line. See para. 437.4.

02 **434.18 Line Markers**

(a) Except as provided in paragraph (c) of this section, adequate pipeline location markers for the protection of the pipeline, the public, and persons performing work in the area shall be placed over each buried pipeline in accordance with the following:

(1) Markers shall be located at each public road crossing, at each railroad crossing, at each navigable stream crossing, and in sufficient numbers along the remainder of the buried line so that the pipeline location including direction of the pipeline is adequately known. It is recommended that markers are installed on each side of each crossing whenever possible.

(2) Markers shall be installed at locations where the line is above ground in areas which are accessible to the public.

(b) The marker shall state at least the following on a background of sharply contrasting colors:

(1) The word "Warning," "Caution," or "Danger" followed by the words "Petroleum (or the name of the hazardous liquid transported) Pipeline" or "Carbon Dioxide Pipeline" all of which, except for markers in heavily developed urban areas, must be in letters at least one inch high with an approximate stroke of one-quarter inch.

(2) The name of the operator and a telephone number (including area code) where the operator can be reached at all times.

(c) API RP 1109 should be used for additional guidance.

(d) Unless required by applicable regulatory agencies, line markers are not required for buried pipelines located offshore or under waterways and other bodies of water, or in heavily developed urban areas such as downtown business centers where the placement of markers is impractical and would not serve the purpose for which markers are intended and the local government maintains substructure records.

434.19 Corrosion Control

Protection of ferrous pipe and components from external and internal corrosion shall be as prescribed in Chapter VIII.

434.20 Pump Station, Tank Farm, and Terminal Construction

434.20.1 General. All construction work performed on pump stations, tank farms, terminals, equipment installations, piping, and allied facilities shall be done under construction specifications. Such specifications shall cover all phases of the work under contract and shall be in sufficient detail to insure that the requirements of this Code shall be met. Such specifications shall include specific details on soil conditions, foundations and concrete work, steel fabrication and building erection, piping, welding, equipment and materials, and all construction factors contributing to safety and sound engineering practice.

434.20.2 Location. Pump stations, tank farms, and terminals should be located on the pipeline's fee or leased property in order to be assured that proper safety

precautions may be applied. The pump station, tank farm, or terminal shall be located at such clear distances from adjacent properties not under control of the company as to minimize the communication of fire from structures on adjacent properties. Similar consideration shall be given to its relative location from the station manifolds, tankage, maintenance facilities, personnel housing, etc. Sufficient open space shall be left around the building and manifolds to provide access for maintenance equipment and fire fighting equipment. The station, tank farm, or terminal shall be fenced in such a manner as to minimize trespass, and roadways and gates should be located to give ready access to or egress from the facilities.

434.20.3 Building Installation. Buildings shall be located and constructed to comply with detailed plans and specifications. The excavation for and installation of foundations and erection of the building shall be done by craftsmen familiar with the respective phase of the work, and all work shall be done in a safe and workmanlike manner. Inspection shall be provided to assure that the requirements of the plans and specifications are met.

434.20.4 Pumping Equipment and Prime Movers. Installation of pumping equipment and prime movers shall be covered by detailed plans and specifications which have taken into account the variables inherent in local soil conditions, utilization, and arrangement of the equipment to provide the optimum in operating ease and maintenance access. Machinery shall be handled and mounted in accordance with recognized good millwright practice and be provided with such protective covers as to prevent damage during construction. Recommendations of installation details provided by manufacturers for auxiliary piping, setting, and aligning shall be considered as minimum requirements.

434.20.5 Pump Station, Tank Farm, and Terminal Piping. All piping, including but not limited to main unit interconnections, manifolds, scraper traps, etc., which can be subject to the mainline pressure shall be constructed in accordance with the welding standards (see para. 434.8), corrosion control requirements (see Chapter VIII), and other practices of this Code.

434.20.6 Controls and Protective Equipment. Pressure controls and protective equipment, including pressure limiting devices, regulators, controllers, relief valves, and other safety devices, as shown on the drawings or required by the specifications, shall be installed by competent and skilled workmen. Installation shall be accomplished with careful handling and minimum exposure of instruments and devices to inclement weather conditions, dust, or dirt to prevent damage. Also, piping, conduits, or mounting brackets shall not cause the instruments or devices to be distorted or in any strain. Instruments and devices shall be installed so that they can be checked without undue interruptions in operations. After installation, controls and protective equipment shall be tested under conditions approximating actual operations to assure their proper functioning.

434.20.7 Fire Protection. Fire protection when provided shall be in accordance with recommendations in NFPA 30. If the system installed requires the services of fire pumps, their motive power shall be separate from the station power so that their operation shall not be affected by emergency shutdown facilities.

434.21 Storage and Working Tankage

434.21.1 General. All construction work performed on storage and working tankage and allied equipment, piping, and facilities shall be done under construction specifications. Such specifications shall cover all phases of the work under contract, and shall be in sufficient detail to insure that the requirements of the Code shall be met. Such specifications shall include specific details on soil conditions, foundations and concrete work, tank fabrication and erection, piping, welding, equipment and materials, dikes, and all construction factors contributing to safety and sound engineering practice.

434.21.2 Location

(a) Tankage shall be located on the pipeline's fee or leased property in order to assure that proper safety precautions may be applied. Tank facilities shall be located at such clear distances from adjacent properties not under control of the company as to minimize the communication of fire from structures on adjacent properties. Similar consideration shall be given to relative locations between station manifolds, pumping equipment, maintenance facilities, personnel housing, etc. Sufficient open space shall be left around the tankage facilities and associated equipment to provide access for maintenance and fire fighting equipment. The tankage area shall be fenced so as to minimize trespass, and roadways and gates should be located to give ready ingress to and egress from the facilities.

(b) Spacing of tankage shall be governed by the requirements of NFPA 30.

434.21.3 Tanks and Pipe-Type Storage

(a) Tanks for storage or handling crude oil and liquid petroleum products and liquid alcohols having vapor pressures approximating atmospheric shall be

constructed in accordance with API 650, API 12B, API 12D, API 12F, or designed and constructed in accordance with accepted good engineering practices.

(b) Tanks for storage or handling liquid petroleum products and liquid alcohols having vapor gage pressures of 0.5 psi (0.035 bar) but not exceeding 15 psi (1 bar) shall be constructed in accordance with API 620.

(c) Tanks used for storage or handling liquids having vapor gage pressures greater than 15 psi (1 bar) shall be designed and constructed in accordance with the design of accredited tank builders and the ASME Boiler and Pressure Vessel Code, Section VIII, Division 1 or Division 2.

(d) Buried pipe-type holders used for storage and handling liquid petroleum, liquid alcohols, or liquid anhydrous ammonia shall be designed and constructed in accordance with the requirements of this Code for pipe and piping components.

434.21.4 Foundations. Tank foundations shall be constructed in accordance with plans and specifications which shall take into account local soil conditions, type of tank, usage, and general location.

434.21.5 Dikes or Firewalls. The protection of the pipeline's station, tank farm, terminal, or other facilities from damage by fire from adjacent facilities, as well as the protection of the general public, may dictate the need of dikes or firewalls around tankage or between tankage and station or terminal. Tank dikes or firewalls, where required, shall be constructed to meet the capacity requirements set out in NFPA 30.

434.22 Electrical Installations

434.22.1 General. Electrical installations for lighting, power, and control shall be covered by detailed plans and specifications, and installations shall be in accordance with codes applicable to the specific type of circuitry and classification of areas for electrical installation. Inspection shall be provided and all circuitry shall be tested before operation to assure that the installation was made in workmanlike manner to provide for the continuing safety of personnel and equipment. Installations shall be made in accordance with NFPA 70 and API RP 500C.

434.22.2 Care and Handling of Materials. All electrical equipment and instruments shall be carefully handled and properly stored or enclosed to prevent damage, deterioration, or contamination during construction. Packaged components are not to be exposed until installation. Equipment susceptible to damage or deterioration by exposure to humidity shall be adequately protected by using appropriate means such as plastic film enclosures, desiccants, or electric heating.

434.22.3 Installation. The installation of electrical materials shall be made by qualified personnel familiar with details of electrical aspects and code requirements for such installation. At all times care shall be exercised to prevent damage to the insulation of cable and wiring. All partial installations shall be protected from damage during construction. The installation design and specifications shall give consideration to the need for dust- and/or moisture-proof enclosures for such special gear as relays, small switches, and electronic components. In no case shall the frames of electric motors or other grounded electrical equipment be used as the ground connection for electrical welding.

434.23 Liquid Metering

434.23.1 Positive displacement meters, turbine meters, or equivalent liquid measuring devices and their proving facilities shall be designed and installed in accordance with the API Manual of Petroleum Measurement Standards.

434.23.2 Provisions shall be made to permit access to these facilities by authorized personnel only.

434.23.3 Assembly of the metering facility components shall be in accordance with para. 435.

434.24 Liquid Strainers and Filters

434.24.1 Strainers and filters shall be designed to the same pressure limitations and subjected to the same test pressures as the piping system in which they are installed, and supported in such a manner as to prevent undue loading to the connecting piping system.

434.24.2 Installation and design shall provide for ease of maintenance and servicing without interference with the station operation.

434.24.3 The filtering medium should be of such retention size and capacity as to fully protect the facilities against the intrusion of harmful foreign substances.

434.24.4 Assembly of strainers or filters and their components shall be in accordance with para. 435.

435 ASSEMBLY OF PIPING COMPONENTS

435.1 General

The assembly of the various piping components, whether done in a shop or as a field erection, shall be done so that the completely erected piping conforms

with the requirements of this Code and with the specific requirements of the engineering design.

435.2 Bolting Procedure

435.2.1 All flanged joints shall be fitted up so that the gasket contact faces bear uniformly on the gasket, and made up with uniform bolt stress.

435.2.2 In bolting gasketed flanged joints, the gasket shall be properly compressed in accordance with the design principles applicable to the type of gasket used.

435.2.3 All bolts or studs shall extend completely through their nuts.

435.3 Pumping Unit Piping

435.3.1 Piping to main pumping units shall be so designed and supported that when assembled to the pump flanges and valves it should be relatively free of stress and should not add stress or load to the pump frame.

435.3.2 The design and assembly shall take into account the forces of expansion and contraction to minimize their effect within the assembly.

435.3.3 All valves and fittings on pumping units shall carry the same pressure ratings as required for line operating pressures.

435.3.4 Welding shall be in accordance with para. 434.8 of the Code.

435.3.5 Bolting shall be in accordance with para. 435.2.

435.4 Manifolds

435.4.1 All components within a manifold assembly, including valves, flanges, fittings, headers, and special assemblies, shall withstand the operating pressures and specified loadings for the specific service piping to which it is connected.

435.4.2 Meter banks, prover loops, and scraper traps shall be subject to the same assembly requirements as manifolds.

435.4.3 Manifold headers with multiple outlets shall have outlets designed as covered in paras. 404.3.1(b) and 404.3.1(e) and illustrated in Figs. 404.3.1(b)(3) and 404.3.1(d)(2), respectively. Assembly may be with the use of jigs to assure alignment of outlets and flanges with other components. The fabricated unit shall be stress relieved before removal from the jig.

435.4.4 Manifold headers assembled from wrought tees, fittings, and flanges may be assembled with jigs to assure alignment of components. Stress relieving should be considered.

435.4.5 All welding on manifolds and headers shall conform to para. 434.8.

435.4.6 Final assembly of all components shall minimize locked-in stresses. The entire assembly, shall be adequately supported to provide minimum unbalance and vibration.

435.5 Auxiliary Liquid Petroleum, Carbon Dioxide, Liquid Anhydrous Ammonia, or Liquid Alcohol Piping

435.5.1 All auxiliary piping between main units and auxiliary components shall be assembled in a workmanlike manner and in accordance with the applicable code.

435.5.2 All welded auxiliary lines shall be assembled in accordance with the requirements of this Code with special provisions as required for assembly to minimize locked-in stress, and for adequate support or restraint to minimize vibration.

CHAPTER VI
INSPECTION AND TESTING

436 INSPECTION

436.1 General

Construction inspection provisions for pipelines and related facilities shall be adequate to assure compliance with the material, construction, welding, assembly, and testing requirements of this Code.

436.2 Qualification of Inspectors

Inspection personnel shall be qualified by training and experience. Such personnel shall be capable of performing the following inspection services:

(a) right of way and grading;

(b) ditching;

(c) line up and pipe surface inspection;

(d) welding;

(e) coating;

(f) tie-in and lowering;

(g) backfilling and clean up;

(h) pressure testing;

(i) special services for testing and inspection of facilities, such as station construction, river crossings, electrical installation, radiography, corrosion control, etc., as may be required.

436.5 Type and Extent of Examination Required

436.5.1 Visual

(a) Material

(1) All piping components shall be visually inspected to insure that no mechanical damage has occurred during shipment and handling prior to being connected into the piping system.

(2) All pipe shall be visually inspected to discover any defects as described in paras. 434.5 and 434.8.7.

(3) On systems where pipe is telescoped by grade, wall thickness, or both, particular care shall be taken to insure proper placement of pipe. Permanent records shall be kept showing the location as installed of each grade, wall thickness, type, specification, and manufacturer of the pipe.

(b) Construction

(1) Visual inspection for detection of surface defects in the pipe shall be provided for each job just ahead of any coating operation and during the lowering-in and backfill operation.

(2) The pipe swabbing operation shall be inspected for thoroughness to provide a clean surface inside the pipe.

(3) Before welding, the pipe shall be examined for damage-free bevels and proper alignment of the joint.

(4) The stringer bead shall be inspected, particularly for cracks, before subsequent beads are applied.

(5) The completed weld shall be cleaned and inspected prior to coating operations, and irregularities that could protrude through the pipe coating shall be removed.

(6) When the pipe is coated, inspection shall be made to determine that the coating machine does not cause harmful gouges or grooves in the pipe surface.

(7) Lacerations of the pipe coating shall be inspected prior to repair of coating to see if the pipe surface has been damaged. Damaged coating and pipe shall be repaired before the pipe is lowered in the ditch.

(8) All repairs, changes, or replacements shall be inspected before they are covered up.

(9) The condition of the ditch shall be inspected before the pipe is lowered in to assure proper protection of pipe and coating. For underwater crossings the condition of the ditch and fit of the pipe to the ditch shall be inspected when feasible.

(10) The fit of the pipe to ditch shall be inspected before the backfilling operations.

(11) The backfilling operations shall be inspected for quality and compaction of backfill, placement of material for the control of erosion, and possible damage to the pipe coatings.

(12) Cased crossings shall be inspected during installation to determine that the carrier pipe is supported, sealed, and insulated from the casing.

(13) River crossings shall have thorough inspection, and shall be surveyed and profiled after construction.

(14) All piping components other than pipe shall be inspected to insure damage-free condition and proper installation.

436.5.2 Supplementary Types of Examination

(a) Testing of field and shop welds shall be made in accordance with para. 434.8.5.

(b) Radiographic inspection of welds shall be performed in accordance with para. 434.8.5.

(c) Coated pipe shall be inspected in accordance with para. 461.1.2.

436.6 Repair of Defects

436.6.1 Defects of fabricated items and in pipe wall shall be repaired or eliminated in accordance with para. 434.5.

436.6.2 Welding defects shall be repaired in accordance with para. 434.8.7.

436.6.3 Holidays or other damage to coating shall be repaired in accordance with para. 461.1.2.

437 TESTING

437.1 General

(a) In order to meet requirements of this Code, it is necessary that tests be made upon the completed system and upon component parts of the finished system. When reference in this Code is made to tests or portions of tests described in other codes and specifications, they shall be considered as a part of this Code.

(b) Should leaks occur on tests, the line section or component part shall be repaired or replaced and retested in accordance with this Code.

437.1.3 Testing of Fabricated Items

(a) Fabricated items such as scraper traps, manifolds, volume chambers, etc., shall be hydrostatically tested to limits equal to or greater than those required of the completed system. This test may be conducted separately or as a part of the completed system.

(b) In testing fabricated items before installation, the applicable paragraphs of specifications listed in Table 423.1 shall apply.

437.1.4 Testing After New Construction

(a) Systems or Parts of Systems

(1) All liquid transportation piping systems within the scope of this Code, regardless of stress, shall be tested after construction. Carbon dioxide systems shall be hydrostatically tested.

(2) Systems to be operated at a hoop stress of more than 20% of the specified minimum yield strength of the pipe shall be hydrostatically tested in accordance with para. 437.4.1.

(3) Systems to be operated at a hoop stress of 20% or less of specified minimum yield strength of the pipe may be subjected to a leak test in accordance with para. 437.4.3 in lieu of the hydrostatic test specified in para. 437.4.1.

(4) When testing piping, in no case shall the test pressure exceed that stipulated in the standards of material specifications (except pipe) incorporated in this Code by reference and listed in Table 423.1 for the weakest element in the system, or portion of system, being tested.

(5) Equipment not to be subjected to test pressure shall be disconnected from the piping or otherwise isolated. Valves may be used if valve, including closing mechanism, is suitable for the test pressure.

(b) Testing Tie-Ins. Because it is sometimes necessary to divide a pipeline into test sections and install test heads, connecting piping, and other necessary appurtenances for testing, or to install a pretested replacement section, it is not required that tie-in welds be tested; however, tie-in welds and girth welds joining lengths of pretested pipe shall be inspected by radiographic or other accepted nondestructive methods in accordance with para. 434.8.5(a)(4) if system is not pressure tested after tie-in. After such inspection, the joint shall be coated and inspected in accordance with para. 461.1.2 before backfilling.

(c) Testing Controls and Protective Equipment. All controls and protective equipment, including pressure limiting devices, regulators, controllers, relief valves, and other safety devices, shall be tested to determine that they are in good mechanical condition; of adequate capacity, effectiveness, and reliability of operation for the service in which they are employed; functioning at the correct pressure; and properly installed and protected from foreign materials or other conditions that might prevent proper operation.

437.4 Test Pressure

437.4.1 Hydrostatic Testing of Internal Pressure Piping

(a) Portions of piping systems to be operated at a hoop stress of more than 20% of the specified minimum yield strength of the pipe shall be subjected at any point to a hydrostatic proof test equivalent to not less than 1.25 times the internal design pressure at that point (see para. 401.2.2) for not less than 4 hr. When lines are tested at pressures that develop a hoop stress, based on nominal wall thickness, in excess of 90% of the specified minimum yield strength of the pipe, special care shall be used to prevent overstrain of the pipe.

(1) Those portions of piping systems where all of the pressured components are visually inspected during the proof test to determine that there is no leakage require no further test. This can include lengths of pipe that are pretested for use as replacement sections.

(2) On those portions of piping systems not visually inspected while under test, the proof test shall be followed by a reduced pressure leak test equivalent to not less than 1.1 times the internal design pressure for not less than 4 hr.

(b) API RP 1110 may be used for guidance for the hydrostatic test.

(c) The hydrostatic test shall be conducted with water, except liquid petroleum that does not vaporize rapidly may be used provided:

(1) the pipeline section under test is not offshore and is outside of cities and other populated areas, and each building within 300 ft (90 m) of the test section is unoccupied while the test pressure is equal to or greater than a pressure which produces a hoop stress of 50% of the specific minimum yield strength of the pipe;

(2) the test section is kept under surveillance by regular patrols during test; and

(3) communication is maintained along the test section.

(d) If the testing medium in the system will be subject to thermal expansion during the test, provisions shall be made for relief of excess pressure. Effects of temperature changes shall be taken into account when interpretations are made of recorded test pressures

(e) After completion of the hydrostatic test, it is important in cold weather that the lines, valves, and fittings be drained completely of any water to avoid damage due to freezing.

(f) Carbon dioxide pipelines, valves, and fittings shall be dewatered and dried prior to placing in service to prevent the possibility of forming a corrosive compound from carbon dioxide and water.

437.4.3 Leak Testing. A 1 hr hydrostatic or pneumatic leak test may be used for piping systems to be operated at a hoop stress of 20% or less of the specified minimum yield strength of the pipe. The hydrostatic test pressure shall be not less than 1.25 times the internal design pressure. The pneumatic test gage pressure shall be 100 psi (7 bar) or that pressure which would produce a nominal hoop stress of 25% of the specified minimum yield strength of the pipe, whichever is less.

437.6 Qualification Tests

Where tests are required by other sections of this Code, the following procedures shall be used.

437.6.1 Visual Examination. Used or new pipe to be laid shall be visually examined in accordance with para. 436.5.1.

437.6.2 Bending Properties

(a) For pipe of unknown specification or ASTM A 120, bending properties are required if minimum yield strength used for design is above 24,000 psi (165 MPa), and after type of joint has been identified in accordance with para. 437.6.4. For pipe NPS 2 and smaller, bending test shall meet the requirements of ASTM A 53 or API 5L. For pipe larger than NPS 2 in nominal diameter, flattening tests shall meet the requirements in ASTM A 53, API 5L, or API 5LU.

(b) The number of tests required to determine bending properties shall be the same as required in para. 437.6.6 to determine yield strength.

437.6.3 Determination of Wall Thickness. When the nominal wall thickness is not known, it shall be determined by measuring the thickness at quarter points on one end of each piece of pipe. If the lot of pipe is known to be of uniform grade, size, and nominal thickness, measurement shall be made on not less than 5% of the individual lengths, but not less than 10 lengths; thickness of the other lengths may be verified by applying a gage set to the minimum thickness. Following such measurement, the nominal wall thickness shall be taken as the next nominal wall thickness below the average of all the measurements taken, but in no case greater than 1.14 times the least measured thickness for all pipe under NPS 20, and no greater than 1.11 times the least measured thickness for all pipe NPS 20 and larger.

437.6.4 Determination of Weld Joint Factor. If the type of longitudinal or spiral weld joint is known, the corresponding weld joint factor (Table 402.4.3) may be used. Otherwise, as noted in Table 402.4.3, the factor E shall not exceed 0.60 for pipe NPS 4 and smaller, or 0.80 for pipe over NPS 4.

437.6.5 Weldability. For steel pipe of unknown specification, weldability shall be determined as follows. A qualified welder shall make a girth weld in the pipe. This weld shall be tested in accordance with the requirements of para. 434.8.5. The qualifying weld shall be made under the most severe conditions under which welding will be permitted in the field and using the same procedure as to be used in the field. The pipe shall be considered weldable if the requirements set forth in para. 434.8.5 are met. At least one such test

weld shall be made for each number of lengths to be used as listed below.

Minimum Number of Test Welds

Nominal Pipe Size	Number of Lengths per Test
Less than 6	400
6 through 12	200
Larger than 12	100

All test specimens shall be selected at random.

437.6.6 Determination of Yield Strength. When the specified minimum yield strength, minimum tensile strength, or minimum percent of elongation of pipe is unknown, the tensile properties may be established as follows.

Perform all tensile tests prescribed by API 5L or 5LU, except that the minimum number of such tests shall be as follows.

Nominal Pipe Size	Number of Lengths per Test
Less than 6	200
6 through 12	100
Larger than 12	50

All test specimens shall be selected at random.

437.6.7 Minimum Yield Strength Value. For pipe of unknown specification, the minimum yield strength may be determined as follows.

Average the value of all yield strength tests for a test lot. The minimum yield strength shall then be taken as the lesser of the following:

(a) 80% of the average value of the yield strength tests;

(b) the minimum value of any yield strength test, except that in no case shall this value be taken as greater than 52,000 psi (358 MPa);

(c) 24,000 psi (165 MPa) if the average yield-tensile ratio exceeds 0.85.

437.7 Records

A record shall be maintained in the files of the operating company relative to design, construction, and testing of each mainline within the scope of this Code. These records shall include material specifications; route maps and alignments sheets for 'as-built' condition; location of each pipe size, grade, wall thickness, type of seam (if any), and manufacturer; coatings; test data; and, for carbon dioxide pipelines, toughness requirements. These records shall be kept for the life of the facility. See para. 436.5.1(a)(3).

CHAPTER VII
OPERATION AND MAINTENANCE PROCEDURES

450 OPERATION AND MAINTENANCE PROCEDURES AFFECTING THE SAFETY OF LIQUID TRANSPORTATION PIPING SYSTEMS

450.1 General

(a) It is not possible to prescribe in this Code a detailed set of operating and maintenance procedures that will encompass all cases. It is possible, however, for each operating company to develop operating and maintenance procedures based on the provisions of this Code, and the company's experience and knowledge of its facilities and conditions under which they are operated, which will be adequate from the standpoint of public safety.

(b) The methods and procedures set forth herein serve as a general guide, but do not relieve the individual or operating company from the responsibility for prudent action that current particular circumstances make advisable.

(c) It must be recognized that local conditions (such as the effects of temperature, characteristics of the line contents, and topography) will have considerable bearing on the approach to any particular maintenance and repair job.

(d) Suitable safety equipment shall be available for personnel use at all work areas and operating facilities where liquid anhydrous ammonia is transported. Such safety equipment shall include at least the following:

(1) full face gas mask with anhydrous ammonia refill canisters;

(2) independently supplied air mask;

(3) tight-fitting goggles or full face shield;

(4) protective gloves;

(5) protective boots;

(6) protective slicker and/or protective pants and jacket;

(7) easily accessible shower and/or at least 50 gal (190 liters) of clean water in an open top container.

Personnel shall be instructed in effective use of masks and limited shelf life of refill canisters. Protective clothing shall be of rubber fabric or other ammonia impervious material.

450.2 Operation and Maintenance Plans and Procedures

Each operating company having a transportation piping system within the scope of this Code shall:

(a) have written detailed plans and training programs for employees covering operating and maintenance procedures for the transportation piping system during normal operations and maintenance in accordance with the purpose of this Code; essential features recommended for inclusion in the plans for specific portions of the system are given in paras. 451 and 452.

(b) have a plan for external and internal corrosion control of new and existing piping systems, including requirements and procedures prescribed in para. 453 and Chapter VIII;

(c) have a written Emergency Plan as indicated in para. 454 for implementation in the event of system failures, accidents, or other emergencies; train appropriate operating and maintenance employees with regard to applicable portions of the plan, and establish liaison with appropriate public officials with respect to the plan;

(d) have a plan for reviewing changes in conditions affecting the integrity and safety of the piping system, including provisions for periodic patrolling and reporting of construction activity and changes in conditions, especially in industrial, commercial, and residential areas and at river, railroad, and highway crossings, in order to consider the possibility of providing additional protection to prevent damage to the pipeline in accordance with para. 402.1;

(e) establish liaison with local authorities who issue construction permits in urban areas to prevent accidents caused by excavators;

(f) establish procedures to analyze all failures and accidents for the purpose of determining the cause and to minimize the possibility of recurrence;

(g) maintain necessary maps and records to properly administer the plans and procedures, including records listed in para. 455;

(h) have procedures for abandoning piping systems, including the requirements in para. 457;

(i) in establishing plans and procedures, give particu-

lar attention to those portions of the system presenting the greatest hazard to the public in the event of emergencies or because of construction or extraordinary maintenance requirements;

(j) operate and maintain its piping system in conformance with these plans and procedures;

(k) modify the plans and procedures from time to time as experience dictates and as exposure of the system to the public and changes in operating conditions require.

451 PIPELINE OPERATION AND MAINTENANCE

451.1 Operating Pressure

(a) Care shall be exercised to assure that at any point in the piping system the maximum steady state operating pressure and static head pressure with the line in a static condition do not exceed at that point the internal design pressure and pressure ratings for the components used as specified in para. 402.2.3, and that the level of pressure rise due to surges and other variations from normal operation does not exceed the internal design pressure at any point in the piping system and equipment by more than 10% as specified in para. 402.2.4.

(b) A piping system shall be qualified for a higher operating pressure when the higher operating pressure will produce a hoop stress of more than 20% of the specified minimum yield strength of the pipe in accordance with para. 456.

(c) If a piping system is derated to a lower operating pressure in lieu of repair or replacement, the new maximum steady state operating pressure shall be determined in accordance with para. 451.7.

(d) For existing systems utilizing materials produced under discontinued or superseded standards or specifications, the internal design pressure shall be determined using the allowable stress and design criteria listed in the issue of the applicable code or specification in effect at the time of the original construction.

451.2 Communications

A communications facility shall be maintained to assure safe pipeline operations under both normal and emergency conditions.

02 ### 451.3 Line Markers and Signs

(a) Line markers shall be installed and maintained over each line at each public road crossing, at each railroad crossing, at each navigable stream crossing, and in sufficient number along the remainder of the pipeline route to properly locate and identify the buried pipeline. See para. 434.18.

(b) Pipeline markers at crossings, aerial markers when used, and other signs shall be maintained so as to indicate the location of the line and to provide the required information on the pipeline. Additional pipeline markers shall be installed and maintained along the pipeline in areas of development and growth to protect the pipeline from encroachment.

451.4 Right of Way Maintenance

(a) The right of way should be maintained so as to have clear visibility and to give reasonable access to maintenance crews.

(b) Access shall be maintained to valve locations.

(c) Diversion ditches or dikes shall be maintained where needed to protect against washouts of the line and erosion of the landowner's property.

451.5 Patrolling

(a) Each operating company shall maintain a periodic pipeline patrol program to observe surface conditions on and adjacent to the pipeline right of way, indication of leaks, construction activity other than that performed by the company, and any other factors affecting the safety and operation of the pipeline. Special attention shall be given to such activities as road building, ditch cleanouts, excavations, and like encroachments to the pipeline system. Patrols shall be made at intervals not exceeding 2 weeks, except that piping systems transporting LPG or liquid anhydrous ammonia shall be patrolled at intervals not exceeding 1 week in industrial, commercial, or residential areas.

(b) Underwater crossings shall be inspected periodically for sufficiency of cover, accumulation of debris, or for any other condition affecting the safety and security of the crossings, and at any time it is felt that the crossings are in danger as a result of floods, storms, or suspected mechanical damage.

451.6 Pipeline Repairs

451.6.1 General

(a) Repairs shall be covered by a maintenance plan [see para. 450.2(a)] and shall be performed under qualified supervision by trained personnel aware of and familiar with the hazards to public safety, utilizing strategically located equipment and repair materials. The maintenance plan shall consider the appropriate

information contained in API Publ. 2200, API Pub. 2201, API Standard 1104, and API RP 1111. It is essential that all personnel working on pipeline repairs understand the need for careful planning of the job, be briefed as to the procedure to be followed in accomplishing the repairs, and follow precautionary measures and procedures outlined in API Publ. 2200. Personnel working on repairs to pipelines handling LPG, carbon dioxide, liquid alcohol, or liquid anhydrous ammonia shall also be informed on the specific properties, characteristics, and potential hazards associated with those liquids, precautions to be taken following detection of a leak, and safety repair procedures set forth for LPG pipelines in API Publ. 2200. Approvals, procedures, and special considerations described in API Publ. 2201 shall be observed for welding, as well as making hot taps on pipelines, vessels, or tanks which are under pressure. Piping in the vicinity of any repair shall be adequately supported during and after the repair.

(b) If an inert fluid is used to temporarily displace the liquid in a pipeline system for the purpose of a repair, a detailed written procedure shall be required. Because the potential energy of a gas presents special concerns, this procedure shall address, as a minimum, the factors related to the use of an inert gas:

(1) maximum flow rate;

(2) pressure;

(3) injection temperature;

(4) inert gas disposal;

(5) safety procedures.

The procedure shall be followed under the supervision required in para. 451.6.1(a).

451.6.2 Disposition of Defects

(a) Limits and Dispositions of Imperfections

(1) Gouges and grooves shall be removed or repaired in accordance with para. 451.6.2(b).

(2) Dents meeting any of the following conditions shall be removed or repaired:

(a) dents which affect the pipe curvature at the pipe seam or at any girth weld;

(b) dents containing a scratch, gouge, or groove;

(c) dents exceeding a depth of ¼ in. (6 mm) in pipe NPS 4 and smaller, or 6% of the nominal pipe diameter in sizes greater than NPS 4;

(d) dents containing external corrosion where the remaining wall thickness is less than 87.5% of that required for design.

(3) All arc burns shall be removed or repaired.

(4) All cracks shall be removed or repaired.

(5) All welds found to have defects as set forth in para. 434.8.5(b) or in the appropriate pipe specification shall be removed or repaired.

(6) General Corrosion. Pipe shall be replaced, or repaired if the area is small, or operated at a reduced pressure (see para. 451.7) if general corrosion has reduced the wall thickness to less than the design thickness calculated in accordance with para. 404.1.2 decreased by an amount equal to the manufacturing tolerance applicable to the pipe or component.

(7) Localized Corrosion Pitting. Pipe shall be repaired, replaced, or operated at a reduced pressure (see para. 451.7) if localized corrosion pitting has reduced the wall thickness to less than the design thickness calculated in accordance with para. 404.1.2 decreased by an amount equal to the manufacturing tolerance applicable to the pipe or component. This applies if the length of the pitted area is greater than permitted by the equation shown below. The following method applies only when the depth of the corrosion pit is less than 80% of the nominal wall thickness of the pipe. This method shall not be used to evaluate corrosion concentrated in electric resistance welded seams (ERW), electric induction welded seams or electric flash-welded seams, nor shall it be used to evaluate corrosion-caused metal loss which is circumferentially oriented along or in a girth weld or its heat-affected zone. The method may be used, however, to evaluate the longitudinal profile of corrosion-caused metal loss which crosses a girth weld or impinges on a submerged arc welded seam. The corroded area must be clean to bare metal. Care shall be taken in cleaning corroded areas of a pressurized pipeline when the degree of corrosion is significant.

$$L = 1.12B\sqrt{Dt_n}$$

where

$$B = \sqrt{\left(\frac{c/t_n}{1.1c/t_n - 0.15}\right)^2 - 1}$$

L = maximum allowable longitudinal extent of the corroded area as shown in Fig. 451.6.2(a)(7), in. (mm)

B = a value not to exceed 4.0 which may be determined from the above equation or Fig. 451.6.2(a)(7)

D = nominal outside diameter of the pipe, in. (mm)

t_n = nominal wall thickness of the pipe, in. (mm)

c = maximum depth of the corroded area, in. (mm)

(8) Areas where grinding has reduced the remaining wall thickness to less than the design thickness calculated in accordance with para. 404.1.2 decreased

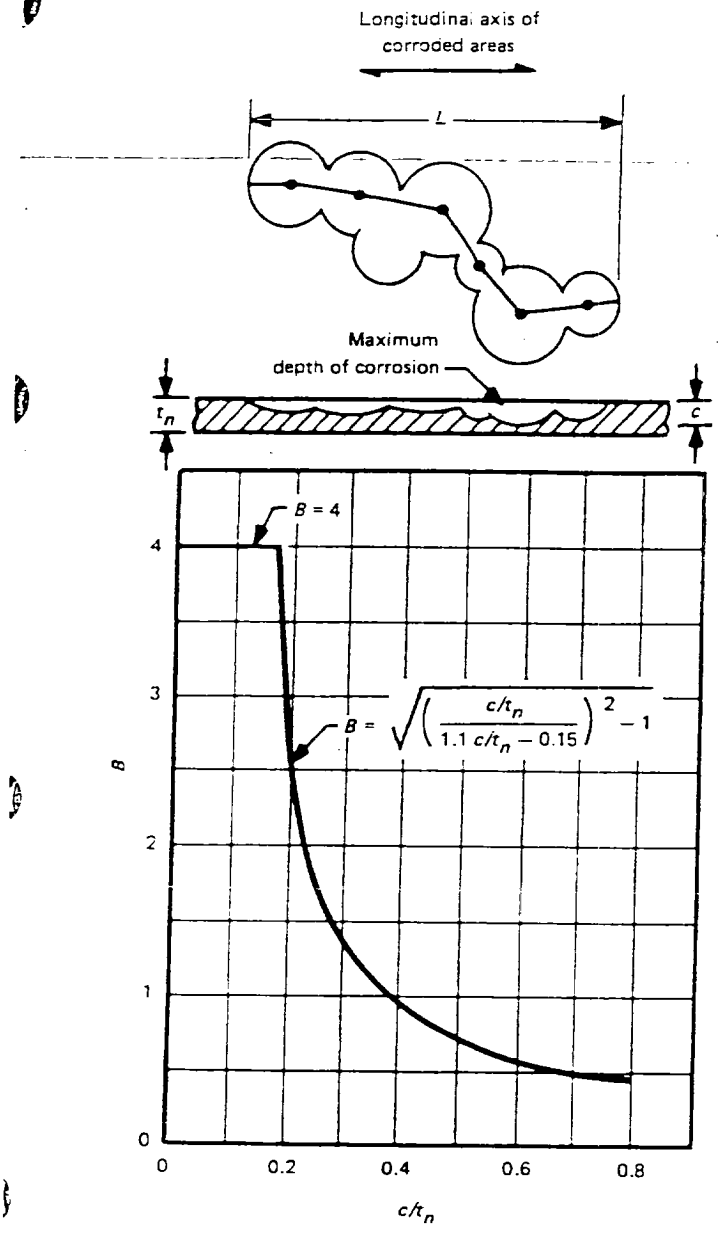

FIG. 451.6.2(a)(7) PARAMETERS USED IN ANALYSIS OF THE STRENGTH OF CORRODED AREAS

by an amount equal to the manufacturing tolerance applicable to the pipe or component, may be analyzed the same as localized corrosion pitting [see para. 451.6.2(a)(7)] to determine if ground areas need to be replaced, repaired, or the operating pressure reduced (see para. 451.7). ASME B31G may be used for guidance.

(9) All pipe containing leaks shall be removed or repaired.

(b) Allowable Pipeline Repairs

(1) If practical, the pipeline should be taken out of service and repaired by cutting out a cylindrical piece of pipe containing the defect and replacing the same with pipe meeting the requirements of para. 401.2.2 and having a length of not less than one-half diameter.

(2) If not practical to take the pipeline out of service, repairs may be made by the installation of a full encirclement welded or mechanically applied split sleeve in accordance with para. 451.6.2(c).

(a) For repairs of dents, or dents containing external corrosion where the remaining wall thickness is less than 87.5% of that required for design, either a hardenable filler material such as epoxy shall be used to fill the void between the sleeve and the pipe to restore the original contour of the pipe, or the carrier pipe shall be tapped through the sleeve or other means provided to equalize the internal pressures of the carrier pipe and the sleeve.

(b) For repairs to nonleaking cracks in materials that might be expected to behave in a brittle manner (e.g., a seam defect in a low-frequency welded ERW seam), an appropriately-designed fitting shall be installed on the sleeve through which the sleeve and carrier pipe will be tapped to equalize the internal pressures of the carrier pipe and the sleeve.

(3) If not practical to take the pipeline out of service, defects may be removed by grinding or hot tapping. Sharp imperfections may be rendered blunt by grinding, but the absence of a sharp imperfection must be verified by visual and nondestructive examination. When grinding, the ground areas shall be smoothly contoured and be in accordance with para. 451.6.2(a)(8). When hot tapping, the portion of piping containing the defect shall be completely removed.

(4) If not practical to take the pipeline out of service, minor leaks and small corroded areas, except for cracks, may be repaired by the installation of a patch or welded fitting in accordance with paras. 451.6.2(c)(5) and (8). Pipe containing arc burns, grooves, and gouges may be repaired with patches or welded fitting if the arc burn or notch is removed by grinding.

(5) If not practical to take the pipeline out of service, defects in welds produced with a filler metal, small corroded areas, gouges, grooves, and arc burns may be repaired by depositing weld metal in accordance with para. 451.6.2(c)(9). Weld imperfections, arc burns,

gouges, and grooves shall be removed by grinding prior to depositing the weld filler metal.

(6) If not practical to take the pipeline out of service, nonleaking corroded areas may be repaired by installation of a fully-welded, partial encirclement half sole in accordance with para. 451.6.2(c)(13).

(7) If not practical to take the pipeline out of service, nonleaking corroded areas may be repaired by installation of a mechanically applied composite material wrap used to reinforce the pipeline in accordance with para. 451.6.2(c)(14).

(c) Repair Methods

(1) All repair weld procedures and all welders performing repair work shall be qualified in accordance with para. 434.8.3 or API RP 1107. The welders shall also be familiar with safety precautions and other problems associated with cutting and welding on pipe that contains or has contained liquids within the scope of this Code. Cutting and welding shall commence only after compliance with para. 434.8.1(c).

(2) The qualification test for welding procedures to be used on pipe containing a liquid shall consider the cooling effects of the pipe contents on the soundness and physical properties of the weld. Welding procedures on pipe not containing liquid shall be qualified in accordance with para. 434.8.3.

(3) Materials used for pipeline repair shall be in accordance with at least one of the specifications or standards listed in Table 423.1, or as otherwise required by this Code.

(4) Temporary repairs may be necessitated for operating purposes and shall be made in a safe manner. Such temporary repairs shall be made permanent or replaced in a permanent manner as described herein as soon as practical.

(5) Welded patches shall have rounded corners and a maximum dimension of 6 in. (150 mm) along the pipe axis. The patch material shall be of a similar or higher grade with a wall thickness similar to the pipe being repaired. Patches shall be limited to pipe sizes NPS 12 and less and conforming to API 5L, Grade X42 and lower. Patches shall be attached by fillet welds. Insert patching is prohibited. Special consideration shall be given to minimize stress concentrations resulting from the repair.

(6) Full encirclement welded split sleeves installed to repair leaks or otherwise to contain internal pressure shall have a design pressure of not less than the pipe being repaired and shall be fully welded, both circumferentially and longitudinally. Length of full encirclement split sleeves shall not be less than 4 in. (100 mm). If the sleeve is thicker than the pipe being repaired, the circumferential ends shall be chamfered (at approximately 45 deg.) down to the thickness of the pipe. For full encirclement split sleeves installed for repair by reinforcement only and not internal pressure containment, circumferential welding is optional. Special consideration shall be given to minimize stress concentrations resulting from the repair.

(7) Mechanically applied full encirclement repair fittings shall meet the design requirements of paras. 401.2 and 418.

(8) Welded fittings used to cover pipeline defects shall not exceed NPS 3 and shall have a design pressure of not less than the pipe being repaired.

(9) For repairs involving only deposition of a weld filler metal, welding processes shall be in accordance with the requirements of the appropriate pipe specification for the grade and type being repaired. Welding procedure qualifications shall be in accordance with para. 451.6.2(c)(2).

(10) Where repairs are made to a coated pipe, all damaged coating shall be removed and new coating applied in accordance with para. 461.1.2. Replacement pieces of pipe, welded patches, and full encirclement welded split sleeves used in making repairs shall also be coated when installed in a coated line.

(11) Pipe containing liquid shall be examined to determine that the material is sound and of adequate thickness in the areas to be affected by grinding, welding, cutting, or hot tapping operations.

(12) If the pipeline is not taken out of service, the operating pressure shall be reduced to a level which will provide safety during the repair operations.

(13) Fully welded partial encirclement half soles may be used to repair corroded areas only on pipe and shall not be used to repair leaks, gouges, dents, or other defects. The use of half soles shall be limited to pipe sizes NPS 12 or less and may only be used on pipe made prior to 1942 with a specified minimum yield strength not exceeding 40,000 psi (276 MPa). The half sole material shall be of a similar or higher grade with a wall thickness not less than 87.5% or more than 125% of that of the pipe being repaired. Half soles shall have rounded corners and a maximum length of 10 ft (3 m) along the pipe axis. Half soles shall not be used across girth welds and the minimum clearance between the end of half soles or the ends of half soles and girth welds shall be 2 in. Combinations of a half sole and patches shall not be used in parallel around a given circumference. To ensure optimum performance of half soles, the annular space between

the corroded pipe and the half sole may be filled with a hardenable filler material such as epoxy. Special consideration shall be given to ensuring a close fit between the edges of the half sole and the pipe being repaired and to minimizing stress concentrations resulting from the repair.

(14) Mechanically applied composite material wrap may be used to reinforce the pipeline provided that design and installation methods are proven for the intended service prior to application. The user is cautioned that a qualified written procedure performed by trained personnel is a requirement and records shall be retained in accordance with para. 455.

02 **451.6.3 Testing Repairs to Pipelines Operating at a Hoop Stress of More Than 20% of the Specified Minimum Yield Strength of the Pipe**

(a) Testing of Replacement Pipe Sections. When a scheduled repair to a pipeline is made by cutting out a section of the pipe as a cylinder and replacing it with another section of pipe, the replacement section of pipe shall be subjected to a pressure test. The replacement section of pipe shall be tested as required for a new pipeline in accordance with para. 437.4.1. The tests may be made on the pipe prior to installation provided radiographic or other acceptable nondestructive tests (visual inspection excepted) are made on all tie-in butt welds after installation.

(b) Examination of Repair Welds. Welds made during pipeline repairs shall be visually examined by a qualified inspector. Welds should also be examined by at least one other nondestructive examination method.

451.7 Derating a Pipeline to a Lower Operating Pressure

(a) Corroded pipe or pipe containing areas repaired by grinding may be derated to a lower operating pressure in lieu of replacement or repair or further repair. Except as provided in para. 451.7(b), the lower operating pressure shall be based on para. 404.1.2 and the actual remaining wall thickness of the pipe at the point of deepest corrosion or grinding.

(b) For pipe containing localized corrosion pitting or areas repaired by grinding where the remaining material in the pipe does not meet the depth and length limits in para. 451.6.2(a)(7), the lower operating pressure may be determined by the following equation, provided the corrosion or grinding is not in the girth or longitudinal weld or related heat affected zones.

$$P_d = 1.1P_i \left[\frac{1 - 0.67\left(\frac{c}{t_n}\right)}{1 - \frac{0.67c}{t_n\sqrt{G^2 + 1}}} \right]$$

where

G = $0.893\, L/\sqrt{Dt_n}$
= a value not to exceed 4.0 in the above analysis and which may be determined from the above equation

P_d = derated internal design gage pressure, psi (bar)

P_i = original internal design gage pressure, based on specified nominal wall thickness of the pipe (see para. 404.1), psi (bar)

L = longitudinal extent of the corroded area as shown in Fig. 451.6.2(a)(7), in. (mm)

For t_n, c, and D, see para. 451.6.2(a)(7).

For values of G greater than 4.0,

$$P_d = 1.1P_i\,(1 - c/t_n)$$

except p_d shall not exceed p_i.

451.8 Valve Maintenance

Pipeline block valves shall be inspected, serviced where necessary, and partially operated at least once each year to assure proper operating conditions.

451.9 Railroads and Highways Crossing Existing Pipelines 02

(a) When an existing pipeline is to be crossed by a new road or railroad, the operating company shall analyze the pipeline in the area to be crossed in terms of the new anticipated external loads. If the sum of the circumferential stresses caused by internal pressure and newly imposed external loads (including both live and dead loads) exceeds 0.90 SMYS (specified minimum yield strength), the operating company shall install mechanical reinforcement, structural protection, or suitable pipe to reduce the stress to 0.90 SMYS or less, or redistribute the external loads acting on the pipeline. API RP 1102 provides methods that may be used to determine the total stress caused by internal pressure and external loads. API RP 1102 also provides methods to check cyclic stress components for fatigue.

(b) Installation of uncased carrier pipe is preferred. Adjustments of existing pipelines in service at a proposed railroad or highway crossing shall conform to details contained in API RP 1102. As specified in para. 461.1.2(f), if casing is used, coated carrier pipe shall

be independently supported outside each end of the casing and insulated from the casing throughout the cased section, and casing ends shall be sealed using a durable, electrically nonconductive material.

(c) Testing and inspection of replaced pipe sections shall conform to requirements of para. 451.6.3. All new girth welds in the carrier pipe shall be radiographed or inspected by other acceptable nondestructive methods (visual inspection excepted).

451.10 Inland Waters Platform Risers

Riser installations shall be visually inspected annually for physical damage and corrosion in the splash zone and above. The extent of any observed damage shall be determined, and, if necessary, the riser installation shall be repaired or replaced.

452 PUMP STATION, TERMINAL, AND TANK FARM OPERATION AND MAINTENANCE

452.1 General

(a) Starting, operating, and shutdown procedures for all equipment shall be established and the operating company shall take appropriate steps to see that these procedures are followed. These procedures shall outline preventive measures and systems checks required to ensure the proper functioning of all shutdown, control, and alarm equipment.

(b) Periodic measurement and monitoring of flow and recording of discharge pressures shall be provided for detection of deviations from the steady state operating conditions of the system.

452.2 Controls and Protective Equipment

(a) Controls and protective equipment, including pressure limiting devices, regulators, controllers, relief valves, and other safety devices, shall be subjected to systematic periodic inspections and tests, at least annually, except as provided in para. 452.2(b), to determine that they are:

(1) in good mechanical condition;

(2) adequate from the standpoint of capacity and reliability of operation for the service in which they are employed;

(3) set to function at the correct pressure;

(4) properly installed and protected from foreign materials or other conditions that might prevent proper operation.

(b) Relief valves on pressure storage vessels containing LPG, carbon dioxide, or liquid anhydrous ammonia shall be subjected to tests at least every 5 years.

452.3 Storage Vessels

(a) Storage vessels, including atmospheric and pressure tanks, handling the liquid or liquids being transported shall be periodically inspected and pertinent records maintained. Points to be covered include:

(1) stability of foundation;

(2) condition of bottom, shell, stairs, roof;

(3) venting or safety valve equipment;

(4) condition of firewalls or tank dikes.

(b) Storage vessels and tanks shall be cleaned in accordance with API Publ. 2015.

452.4 Storage of Combustible Materials

All flammable or combustible materials in quantities beyond those required for everyday use or other than those normally used in pump houses shall be stored in a separate structure built of noncombustible material located a suitable distance from the pump house. All aboveground oil or gasoline storage tanks shall be protected in accordance with NFPA 30.

452.5 Fencing

Station, terminal, and tank farm areas shall be maintained in a safe condition, and shall be fenced and locked, or attended, for the protection of the property and the public.

452.6 Signs

(a) Suitable signs shall be posted to serve as warnings in hazardous areas.

(b) Classified and high voltage areas shall be adequately marked and isolated.

(c) Caution signs shall be displayed indicating name of the operating company and, where possible, an emergency telephone contact.

452.7 Prevention of Accidental Ignition

(a) Smoking shall be prohibited in all areas of a pump station, terminal, or tank farm in which the possible leakage or presence of vapor constitutes a hazard of fire or explosion.

(b) Flashlights or hand lanterns, when used, shall be of the approved type.

(c) Welding shall commence only after compliance with para. 434.8.1(c).

(d) Consideration should be given to the prevention

of other means of accidental ignition. See NACE RP-01-77 for additional guidance.

453 CORROSION CONTROL

Protection of ferrous pipe and components from external and internal corrosion, including tests, inspections, and appropriate corrective measures, shall be as prescribed in Chapter VIII.

454 EMERGENCY PLAN

(a) A written Emergency Plan shall be established for implementation in the event of system failures, accidents, or other emergencies, and shall include procedures for prompt and expedient remedial action providing for the safety of the public and operating company personnel, minimizing property damage, protecting the environment, and limiting accidental discharge from the piping system.

(b) The Plan shall provide for acquainting and training of personnel responsible for the prompt execution of emergency action. Personnel shall be informed concerning the characteristics of the liquid in the piping systems and the safe practices in the handling of accidental discharge and repair of the facilities, with emphasis on the special problems and additional precautions in the handling of leaks and repair of systems transporting LPG, carbon dioxide, or liquid anhydrous ammonia. The operating company shall establish scheduled reviews with personnel of procedures to be followed in emergencies at intervals not exceeding 6 months, and reviews shall be conducted such that they establish the competence of the Emergency Plan.

(c) Procedures shall cover liaison with state and local civil agencies such as fire departments, police departments, sheriff's offices, and highway patrols, to provide prompt intercommunications for coordinated remedial action; dissemination of information on location of system facilities; characteristics of the liquids transported, including additional precautions necessary with leaks from piping systems transporting LPG, carbon dioxide, or liquid anhydrous ammonia; and joint preparation of cooperative action as necessary to assure the safety of the public in the event of emergencies.

(d) A line of communications shall be established with residents along the piping system to recognize and report a system emergency to the appropriate operating company personnel. This could include supplying a card, sticker, or equivalent with names, addresses, and telephone numbers of operating company personnel to be contacted.

(e) In the formulation of emergency procedures for limiting accidental discharge from the piping system, the operating company shall give consideration to:

(1) formulating and placing in operation procedures for an area cooperative pipeline leak notification emergency action system between operating companies having piping systems in the area;

(2) reduction of pipeline pressure by ceasing pumping operations on the piping system, opening the system to delivery storage on either side of the leak site, and expeditious closing of block valves on both sides of the leak site, and in the case of systems transporting LPG, continuation of pumping until LPG has been replaced at point of leak by a less volatile product if vapors are not accumulating to an extent that a serious hazard appears imminent;

(3) interim instructions to local authorities prior to arrival of qualified operating company personnel at the leak site;

(4) rapid transportation of qualified personnel to the leak site;

(5) minimization of public exposure to injury and prevention of accidental ignition by evacuation of residents and the halting of traffic on roads, highways, and railroads in the affected area;

(6) in the case of systems transporting LPG, assessment of extent and coverage of the LPG vapor cloud and determination of hazardous area with portable explosimeters; ignition of vapors at leak site to prevent the uncontrolled spread of vapors; utilization of temporary flares or blowdowns on either side of the leak site; and utilization of internal plugging equipment where it is anticipated that vaporization of LPG entrapped in pipeline segment will continue over a prolonged period;

(7) in the case of systems transporting liquid anhydrous ammonia, assessment of the extent and coverage of the ammonia vapor cloud and utilization of internal plugging equipment where it is anticipated that vaporization of liquid anhydrous ammonia entrapped in the pipeline segment will continue over a prolonged period;

(8) In the case of systems transporting carbon dioxide, assessment of the carbon dioxide released, it effects, and the use of existing means to blow down and control the spread of it at the leak site.

455 RECORDS

For operation and maintenance purposes, the following records shall be properly maintained:

(a) necessary operational data;

(b) pipeline patrol records;

(c) corrosion records as required under para. 465;

(d) leak and break records;

(e) records pertaining to routine or unusual inspections, such as external or internal line conditions;

(f) pipeline repair records.

456 QUALIFYING A PIPING SYSTEM FOR A HIGHER OPERATING PRESSURE

(a) In the event of up-rating an existing piping system when the higher operating pressure will produce a hoop stress of more than 20% of the specified minimum yield strength of the pipe, the following investigative and corrective measures shall be taken:

(1) the design and previous testing of the piping system and the materials and equipment in it be reviewed to determine that the proposed increase in maximum steady state operating pressure is safe and in general agreement with the requirements of this Code;

(2) the conditions of the piping system be determined by leakage surveys and other field inspections, examination of maintenance and corrosion control records, or other suitable means;

(3) repairs, replacements, or alterations in the piping system disclosed to be necessary by steps (1) and (2) be made.

(b) The maximum steady state operating pressure may be increased after compliance with (a) above and one of the following provisions.

(1) If the physical condition of the piping system as determined by (a) above indicates that the system is capable of withstanding the desired increased maximum steady state operating pressure in accordance with the design requirement of this Code, and the system has previously been tested for a duration and to a pressure equal to or greater than required in paras. 437.4.1(a) and (c) for a new piping system for the proposed higher maximum steady state operating pressure, the system may be operated at the increased maximum steady state operating pressure.

(2) If the physical condition of the piping system as determined by (a) above indicates that the ability of the system to withstand the increased maximum steady state operating pressure has not been satisfactorily verified, or the system has not been previously tested to the levels required by this Code for a new piping system for the proposed higher maximum steady state operating pressure, the system may be operated at the increased maximum steady state operating pressure if the system shall successfully withstand the test required by this Code for a new system to operate under the same conditions.

(c) In no case shall the maximum steady state operating pressure of a piping system be raised to a value higher than the internal design pressure permitted by this Code for a new piping system constructed of the same materials. The rate of pressure increase to the higher maximum allowable steady state operating pressure should be gradual so as to allow sufficient time for periodic observations of the piping system.

(d) Records of such investigations, work performed, and pressure tests conducted shall be preserved as long as the facilities involved remain in service.

457 ABANDONING A PIPING SYSTEM

In the event of abandoning a piping system, it is required that:

(a) facilities to be abandoned in place shall be disconnected from all sources of the transported liquid, such as other pipelines, meter stations, control lines, and other appurtenances;

(b) facilities to be abandoned in place shall be purged of the transported liquid and vapor with an inert material and the ends sealed.

CHAPTER VIII
CORROSION CONTROL

460 GENERAL

(a) This Chapter prescribes minimum requirements and procedures for protection of ferrous pipe and components from external and internal corrosion, and is applicable to new piping installations and existing piping systems.

(b) External and internal corrosion shall be controlled consistent with condition of the piping system and the environment in which the system is located by application of these corrosion control requirements and procedures. Application of some corrosion control practices requires a significant amount of competent judgment in order to be effective in mitigating corrosion, and deviation from the provisions of this Chapter is permissible in specific situations, provided the operating company can demonstrate that the objectives expressed herein have been achieved. For carbon dioxide systems, it shall be recognized that water can combine with carbon dioxide to form a compound that may be corrosive under pipeline conditions.

(c) Corrosion control requirements and procedures may in many instances require measures in addition to those shown herein. Therefore, each operating company shall establish procedures to implement the requirements of this Chapter. Procedures, including those for design, installation, and maintenance of cathodic protection systems, shall be prepared and carried out by, or under the direction of, persons qualified by training or experience in corrosion control methods. NACE RP-01-69 or NACE RP-06-75 provides a guide for procedures to implement requirements herein and to monitor and maintain cathodic protection systems.

(d) Corrosion personnel shall be provided equipment and instrumentation necessary to accomplish the work.

(e) Coating crews and inspectors shall be suitably instructed and provided with equipment necessary to coat and inspect the pipe and components.

461 EXTERNAL CORROSION CONTROL FOR BURIED OR SUBMERGED PIPELINES

461.1 New Installations

461.1.1 General

(a) Control of external corrosion of new buried or submerged piping systems shall be provided for each component in the system except where the operating company can demonstrate by tests, investigations, or experience in the area of application that a detrimental corrosive environment does not exist. However, within 12 months after installation, the operating company shall electrically inspect the buried or submerged system. If the electrical inspection indicates that a corrosive condition exists, the piping system shall be cathodically protected. If cathodic protection is not installed, the piping system shall be electrically inspected at intervals not exceeding 5 years, and the system shall be cathodically protected if electrical inspection indicates that a corrosive condition exists.

(b) Control of external corrosion of buried or submerged pipe and components in new installations (including new pump stations, tank farms, and terminals, and relocating, replacing, or otherwise changing existing piping systems) shall be accomplished by the application of an effective protective coating supplemented with cathodic protection and suitable drainage bonds in stray current areas. Materials shall be selected with due regard to the type of supplemental corrosion protection and to the environment.

(c) Where impractical, and where adequate provisions for corrosion control have been made, the minimum clearance of 12 in. (300 mm) between the outside of any pipe installed underground and the extremity of any other underground structure specified in para. 434.6(c) may be reduced.

461.1.2 Protective Coating

(a) Protective coatings used on buried or submerged pipe and components shall have the following characteristics:

(1) mitigate corrosion;

(2) have sufficient adhesion to the metal surface to effectively resist underfilm migration of moisture;

(3) be ductile enough to resist cracking;

(4) have strength sufficient to resist damage due to handling and soil stress;

(5) have properties compatible with any supplemental cathodic protection.

(b) Welds shall be inspected for irregularities that could protrude through the pipe coating, and any such irregularities shall be removed.

(c) Pipe coating shall be inspected, both visually and by an electric holiday detector, just prior to: lowering pipe into ditch, applying a weight coating if used, or submerging the pipe if no weight coating is used. Any holiday or other damage to the coating detrimental to effective corrosion control shall be repaired and reinspected.

(d) Insulating type coating, if used, shall have low moisture absorption characteristics and provide high electrical resistance. Insulating coatings shall be inspected in accordance with established practices at the time of application and just prior to lowering pipe into ditch, and defects shall be repaired and reinspected.

(e) Pipe shall be handled and lowered into ditch or submerged so as to prevent damage after the electrical inspection. Pipe coating shall be protected from lowering-in damage in rough or detrimental environment by use of rock shield, ditch padding, or any other suitable protective measures.

(f) If coated pipe is installed by boring, driving, or other similar method, precautions shall be taken to minimize damage to the coating during installation. If casing is used (see paras. 434.13.4 and 451.9), carrier pipe shall be independently supported outside each end of the casing and insulated from the casing throughout the length of cased section, and casing ends shall be sealed using a durable, electrically nonconductive material.

(g) The backfilling operation shall be inspected for quality, compaction, and placement of material to prevent damage to pipe coating.

(h) Where a connection is made to a coated pipe, all damaged coating shall be removed and new coating applied on the attachments as well as on the pipe.

461.1.3 Cathodic Protection System

(a) A cathodic protection system provided by a galvanic anode or impressed current anode system shall be installed that will mitigate corrosion and contain a method of determining the degree of cathodic protection achieved on the buried or submerged piping system.

(b) A cathodic protection system shall be installed not later than 1 year after completion of construction.

(c) Cathodic protection shall be controlled so as not to damage the protective coating, pipe, or components.

(d) Owners of known underground structures which may be affected by installation of a cathodic protection system shall be notified of said installation, and, where necessary, joint bonding surveys shall be conducted by parties involved.

(e) Electrical installations shall be made in accordance with the National Electrical Code, NFPA 70, API RP 500C, and applicable local codes.

461.1.4 Electrical Isolation

(a) Buried or submerged coated piping systems shall be electrically isolated at all interconnections with foreign systems, except where arrangements are made for mutual cathodic protection or where underground metallic structures are electrically interconnected and cathodically protected as a unit.

(b) An insulating device shall be installed where electrical isolation of a portion of a piping system from pump stations, storage tanks, and similar installations is necessary to facilitate the application of corrosion control. The insulating device shall not be installed where a combustible atmosphere is anticipated unless precautions are taken to prevent arcing.

(c) Consideration shall be given to the prevention of damage to piping systems due to lightning or fault currents when installed in close proximity to electric transmission tower footings, ground cables, or counterpoise. See NACE RP-01-77 for guidance when ac interference problems are suspected. Studies in collaboration with the operator of such electric transmission systems shall be made on common problems of corrosion and electrolysis.

(d) Electrical tests shall be made to locate any unintentional contacts with underground metallic structures, and, if such contacts exist, each one shall be corrected.

(e) When a pipeline is separated, a bonding conductor of sufficient current carrying capacity shall be installed across the points of separation and retained during the period of separation.

461.1.5 Test Leads

(a) Except where impractical in wet marsh areas, sufficient test leads shall be installed on all buried or submerged coated piping systems for taking electrical measurements to indicate adequacy of the cathodic protection.

(b) Test leads shall be installed as follows.

(1) Special attention shall be given to the manner of installation of test leads used for corrosion control or testing, and leads shall be attached to the pipe in such manner as to minimize stress and prevent surface

cracks in the pipe. Leads may be attached directly on the pipe with the low temperature welding process using aluminum powder and copper oxide and limiting the charge to a 15 g cartridge, or with soft solders or other materials that do not involve temperatures exceeding those for soft solders.

(2) Slack shall be provided to prevent test leads from being broken or damaged during backfilling.

(3) Leads shall be insulated from the conduit in which they are contained.

(4) Bond points shall be made watertight, and bared test lead wires, pipe, and components shall be protected by electrical insulating material compatible with original wire insulation and pipe coating.

461.1.6 Electrical Interference

(a) If an impressed current type cathodic protection system is used, the anodes shall be located so as to minimize adverse effect on existing underground metallic structures.

(b) The possibility of external corrosion induced by stray electrical currents in the earth shall be recognized. See NACE RP-01-69 and NACE RP-01-77 for additional guidance. These stray currents are generated by sources remote from, and independent of, the piping system, and are more predominant in highly industrialized areas, mining regions, and locales containing high voltage dc electrical power ground beds. Foreign company pipeline cathodic protection systems are also a common source of stray earth currents. The protection of the piping system against stray current induced corrosion shall be provided by metallic bonds, increased cathodic protection, supplemental protective coatings, insulating flanges, or galvanic anodes.

461.2 Existing Piping Systems

The operating company shall establish procedures for determining the external condition of its existing buried or submerged piping systems and take action appropriate for the conditions found, including, but not limited to, the following.

(a) Examine and study records available from previous inspections and conduct additional inspections where the need for additional information is indicated. The type, location, number, and frequency of such inspections shall be determined by consideration of such factors as knowledge of the condition of the piping system and environment, and public or employee safety in the event of leakage. Corrective measures shall be in accordance with para. 464.

(b) Install cathodic protection on all buried or submerged piping systems that are coated with an effective external surface coating material, except at pump stations, tank farms, and terminals. All buried or submerged piping at pump stations, tank farms, and terminals shall be electrically inspected and cathodic protection installed or augmented where necessary.

(c) Operating pressures on bare piping systems shall not be increased until they are electrically inspected and other appropriate actions are taken regarding condition of pipe and components. The requirements of para. 456 shall also be complied with in the event of uprating.

461.3 Monitoring

(a) Cathodic protection facilities for new or existing piping systems shall be maintained in a serviceable condition, and electrical measurements and inspections of cathodically protected buried or submerged piping systems, including tests for stray electrical currents, shall be conducted at least each calendar year, but with intervals not exceeding 15 months, to determine that the cathodic protection system is operating properly and that all buried or submerged piping is protected in accordance with applicable criteria. Appropriate corrective measures shall be taken where tests indicate that adequate protection does not exist.

(b) Evidence of adequate level of cathodic protection shall be by one or more of the criteria listed in Criteria for Cathodic Protection, Section 6 in NACE RP-01-69, or Section 5 in NACE RP-06-75.

(c) The type, number, location, and frequency of tests shall be adequate to establish with reasonable accuracy the degree of protection provided on all piping within the limits of each cathodic protection system, and shall be determined by considering:

(1) age of the piping system and operating experience, including bell hole inspections and leakage survey data;

(2) condition of pipe at time of application of cathodic protection and method of applying protection;

(3) corrosiveness of environment;

(4) probability of loss of protection due to activity of other construction, reconstruction, or other causes in the area;

(5) method of applying cathodic protection and design life of cathodic protection installation;

(6) public and employee safety.

(d) Test leads required for cathodic protection shall be maintained so that electrical measurements can be obtained to insure adequate protection.

(e) Cathodic protection rectifiers or other impressed

current power source shall be inspected at intervals not exceeding 2 months.

(f) All connected protective devices, including reverse current switches, diodes, and interference bonds, failure of which would jeopardize structure protection, shall be checked at intervals not exceeding 2 months. Other interference bonds shall be checked at least each calendar year but at intervals not exceeding 15 months.

(g) Bare components in a piping system that are not protected by cathodic protection shall be electrically inspected at intervals not exceeding 5 years. The results of this inspection and leak records for the piping components inspected shall be analyzed to determine the location of localized active corrosion areas. Cathodic protection shall be applied at such areas. Inspections and analysis of leak and repair records shall be repeated at intervals not exceeding 5 years.

(h) Buried or submerged piping components exposed for any reason shall be examined for indications of external corrosion. Discovery of active corrosion, general pitting of the component's surface, or a leak caused by corrosion shall be investigated further to determine the cause and extent of the corrosion and whether cathodic protection shall be installed or augmented to mitigate corrosion or whether piping system or portion thereof shall be treated as indicated in paras. 464(b), (c), and (d).

462 INTERNAL CORROSION CONTROL

462.1 New Installations

(a) Internal corrosion is recognized in the operation of liquid pipelines, and a commodity that will corrode the internal surfaces of pipe and components in a piping system shall not be transported unless the corrosive effect of the commodity has been investigated and adequate steps taken to mitigate internal corrosion. It is usually necessary to control internal corrosion in petroleum products and liquefied petroleum gas pipelines to protect product quality, preserve high line efficiencies, and prevent corrosion of internal surfaces. NACE RP-01-75 provides guidance. Frequent scraping, pigging, or sphering, dehydration, inhibition, or internal coating may be used to limit internal corrosion.

(b) If dehydration or inhibitors are used to control internal corrosion, sufficient coupon holders or other types of monitoring techniques shall be utilized to adequately determine the effectiveness of the internal corrosion control program. Inhibitors shall be selected of a type that will not cause deterioration of any piping component and shall be used in sufficient quantity and proper quality necessary to mitigate internal corrosion.

(c) If internal coatings are used to control corrosion, they shall meet the quality specifications and minimum dry film thickness established in the industry and be inspected in accordance with industry recommended practices. Internal coatings shall include provisions for joint protection on piping joined by welding or other methods exposing parent metal at the joints, such as the use of a suitable corrosion inhibitor.

(d) For purposes of this Code, liquid anhydrous ammonia shall contain a minimum of 0.2% water by weight to inhibit stress corrosion cracking. Any added water must be made using steam condensate, deionized, or distilled water.

462.2 Existing Piping Systems

The operating company shall establish procedures for determining the corrosive effect of the commodity being transported, and the internal condition of its existing piping systems, and take appropriate action for the conditions found, including, but not limited to, the following.

Examine and study records available from previous inspections and conduct additional inspections and investigations where the need for additional information is indicated. Corrective measures shall be in accordance with para. 464.

462.3 Monitoring

(a) If scraping, pigging, or sphering, dehydration, inhibitors, or internal coating are used to control internal corrosion in new or existing piping systems, coupons shall be examined or other monitoring techniques utilized at intervals not exceeding 6 months to determine the effectiveness of the protective measures or the extent of any corrosion. Appropriate corrective measures shall be taken where examinations or monitoring techniques indicate that adequate protection does not exist.

(b) Whenever any pipe or component in a piping system can be visually examined internally, or pipe or component is removed from a piping system for any reason, the internal surfaces shall be inspected for evidence of corrosion, and if corrosion is found, the adjacent pipe or component shall be examined. Discovery of active corrosion, general pitting of the pipe or component surface, or a leak caused by corrosion shall be investigated further to determine the cause and extent of the corrosion and whether steps shall be taken or augmented to mitigate corrosion or whether system or

portion thereof shall be treated as indicated in paras. 464(b), (c), and (d).

463 EXTERNAL CORROSION CONTROL FOR PIPING EXPOSED TO ATMOSPHERE

463.1 New Installations

Pipe and components that are exposed to the atmosphere shall be protected from external corrosion by use of corrosion resistant steel or application of protective coating or paint unless the operating company can demonstrate by test, investigation, or experience in area of application that a corrosive atmosphere does not exist. Protective coating or paint shall be applied to a clean surface and shall be suitable material to provide adequate protection from the environment.

463.2 Existing Piping Systems

Pipe and components in existing piping systems that are exposed to the atmosphere shall be inspected in accordance with a planned schedule and corrective measures shall be taken in accordance with para. 464.

463.3 Monitoring

Protective coating or paint used to prevent corrosion of pipe and components exposed to the atmosphere shall be maintained in a serviceable condition, and such protective coating or paint, as well as bare pipe and components not coated or painted as permitted under para. 463.1, shall be inspected at intervals not exceeding 3 years. Appropriate corrective measures shall be taken in accordance with para. 464 where inspections indicate that adequate protection does not exist.

464 CORRECTIVE MEASURES

(a) Criteria on corrosion limits and disposition of corroded pipe are specified in paras. 451.6.2(a)(6) and 451.6.2(a)(7).

(b) Where inspections or leakage history indicate that active corrosion of metal is taking place in any portion of a piping system to the extent that a safety hazard is likely to result, that portion of the system shall be treated as specified in para. 451.6.2(a)(6) or (7), and:

(1) in the case of external corrosion of buried or submerged piping, cathodic protection shall be installed or augmented to mitigate the external corrosion;

(2) in the case of internal corrosion of piping, steps indicated in para. 462.1 shall be taken or augmented to mitigate the internal corrosion;

(3) in the case of external corrosion of piping exposed to the atmosphere, protective coating or paint shall be repaired or applied to mitigate the external corrosion.

(c) Pipe that is replaced because of external corrosion shall be replaced with coated pipe if buried or submerged, and with corrosion resistant steel pipe or coated or painted pipe if exposed to the atmosphere.

(d) If a portion of the piping system is repaired, reconditioned, or replaced, or operating pressure is reduced because of external or internal corrosion, the need for protection of that portion from such corrosion deterioration shall be considered, and any indicated steps taken to control the corrosion.

465 RECORDS

(a) Records and maps showing the location of cathodically protected piping, cathodic protection facilities, and neighboring structures affected by or affecting the cathodic protection system shall be maintained and retained for as long as the piping system remains in service.

(b) Results of tests, surveys and inspections required by this Chapter shall be retained as needed to indicate the adequacy of corrosion control measures. The minimum retention period shall be 2 years or until the results of subsequent inspections, tests, or surveys are received, whichever is longer.

CHAPTER IX
OFFSHORE LIQUID PIPELINE SYSTEMS

A400 GENERAL STATEMENTS

(a) Chapter IX pertains only to offshore pipeline systems as defined in para. A400.1.

(b) This Chapter is organized to parallel the numbering and content of the first eight chapters of the Code. Paragraph designations are the same as those in the first eight chapters, with the prefix "A."

(c) All provisions of the first eight chapters of the Code are also requirements of this Chapter unless specifically modified herein. If the text in this Chapter adds requirements, the requirements in the original Chapter with the same title and number also apply. If a provision in this Chapter is in conflict with one or more provisions in other chapters, the provision in this Chapter shall apply.

(d) It is the intent of this Chapter to provide requirements for the safe and reliable design, installation, and operation of offshore liquid pipeline systems. It is not the intent of this Chapter to be all inclusive. Engineering judgment must be used to identify special considerations which are not specifically addressed. API RP 1111 may be used as a guide. It is not the intent of this Chapter to prevent the development and application of new equipment and technology. Such activity is encouraged as long as the safety and reliability requirements of the Code are satisfied.

A400.1 Scope

This Chapter covers the design, material requirements, fabrication, installation, inspection, testing, and safety aspects of the operation and maintenance of offshore pipeline systems. For purposes of this Chapter, offshore pipeline systems include offshore liquid pipelines, pipeline risers, offshore liquid pumping stations, pipeline appurtenances, pipe supports, connectors, and other components as addressed specifically in the Code. See Fig. 400.1.2.

A400.2 Definitions

Some of the more common terms relating to offshore liquid pipelines are defined below.

buckle arrestor: any device attached to, or made a part of, the pipe for the purpose of arresting a propagating buckle.

buckle detector: any means for detecting dents, excessive ovalization, or buckles in a pipeline.

external hydrostatic pressure: pressure acting on any external surface resulting from its submergence in water.

flexible pipe: pipe which is

(a) manufactured as a composite from both metal and nonmetal components;

(b) capable of allowing large deflections without adversely affecting the pipe's integrity; and

(c) intended to be an integral part of the permanent liquid transportation system.

Flexible pipe does not include solid metallic pipe, plastic pipe, fiber reinforced plastic pipe, rubber hose, or metallic pipes lined with nonmetallic linings or coatings.

hyperbaric weld: a weld performed at ambient hydrostatic pressure.

offshore: the area beyond the line of ordinary high water along that portion of the coast that is in direct contact with the open seas and beyond the line marking the seaward limit of inland coastal waters.

offshore pipeline riser: the vertical or near-vertical portion of an offshore pipeline between the platform piping and the pipeline at or below the seabed, including a length of pipe of at least five pipe diameters beyond the bottom elbow, bend, or fitting. Because of the wide variety of configurations, the exact location of transition among pipeline, pipeline riser, and platform piping must be selected on a case-by-case basis.

offshore pipeline system: includes all components of a pipeline installed offshore for the purpose of transporting liquid, other than production facility piping. Tanker or barge loading hoses are not considered part of the offshore pipeline system.

offshore platform: any fixed or permanently anchored structure or artificial island located offshore.

pipe collapse: flattening deformation of the pipe resulting in loss of cross-sectional strength and circular shape, which is caused by excessive external hydrostatic pressure acting alone.

platform piping: on offshore platforms producing hydrocarbons, platform piping is all liquid transmission piping and appurtenances between the production facility and the offshore pipeline riser(s). On offshore platforms not producing hydrocarbons, platform piping is all liquid transmission piping and appurtenances between the risers. Because of a wide variety of configurations, the exact location of the transition between the offshore pipeline riser(s), platform piping, and production facility must be selected on a case-by-case basis.

propagating buckle: a buckle which progresses rapidly along a pipeline caused by the effect of external hydrostatic pressure on a previously formed buckle, local collapse, or other cross-sectional deformation.

pull tube: a conduit attached to an offshore platform through which a riser can be installed.

pull-tube riser: riser pipe or pipes installed through a pull tube (e.g., J tube or I tube).

return interval: statistically determined time interval between successive events of design environmental conditions being equaled or exceeded.

riser: see *offshore pipeline riser.*

sea floor bathymetry: refers to water depths along the pipeline route.

splash zone: the area of the pipeline riser or other pipeline components that is intermittently wet and dry due to wave and tidal action.

trawl board: a structure that is attached to the bottom of commercial fishing nets and is dragged along the sea floor.

vortex shedding: the periodic shedding of fluid vortices and resulting unsteady flow patterns downstream of a pipeline span.

A401 DESIGN CONDITIONS

A401.1 General

A401.1.1 Offshore Design Conditions. A number of physical parameters, henceforth referred to as design conditions, govern design of the offshore pipeline system so that it meets installation, operation, and other post-installation requirements. Some of the conditions which may influence the safety and reliability of an offshore pipeline system are

- pressure,
- temperature,
- waves,
- current,
- seabed,
- wind,
- ice,
- seismic activity,
- platform motion,
- water depth,
- support settlement,
- accidental loads,
- marine vessel activity, and
- fishing/recreational activities.

The design of an offshore pipeline system is often controlled by installation considerations rather than by operating load conditions.

A401.9 Installation Design Considerations

A401.9.1 Loads for Installation Design. The design of an offshore pipeline system suitable for safe installation and the development of offshore pipeline construction procedures shall be based on consideration of the parameters listed in paras. A401.9.2 and A401.9.3. These parameters shall be considered to the extent that they are significant to the proposed system and applicable to the method of installation being considered.

All parts of the offshore pipeline system shall be designed for the most critical combinations of installation and environmental loads, acting concurrently, to which the system may be subjected.

A401.9.2 Installation Loads. Installation loads which shall be considered are those imposed on the pipeline system under anticipated installation conditions, excluding those resulting from environmental conditions.

Loads which should be considered as installation loads include:

(a) weight, including (as appropriate) the weight of:

(1) pipe;

(2) coatings and their absorbed water;

(3) attachments to the pipe; and

(4) fresh water or sea water content (if pipe is flooded during installation);

(b) buoyancy;

(c) external pressure; and

(d) static loads imposed by construction equipment.

When considering the effect of pipe and/or pipeline component weights (in air and submerged) on installa-

tion stresses and strains, the variability due to weight coating, manufacturing tolerances, and water absorption shall also be considered.

A401.9.3 Environmental Loads During Installation. Environmental loads which shall be considered are those imposed on the pipeline system by environmental conditions. Loads which should be considered under this category include, as appropriate, those arising due to:

(a) waves;

(b) current;

(c) wind;

(d) tides;

(e) ice; and

(f) dynamic loads imposed by construction equipment and vessel motions.

The effects of large tidal changes and water depth variations on construction equipment shall be considered.

An appropriate design return interval storm shall be selected for the anticipated installation duration. This design return interval shall not be less than three times the expected exposure period for the pipeline during installation, or 1 year, whichever is longer.

Direction of waves, wind, and currents shall be considered to determine the most critical expected combination of the environmental loads to be used with the installation loads, as described in para. A401.9.1.

Loads imposed by construction equipment and vessel motions vary with the construction method and construction vessel selected. The limitations and behavioral characteristics of installation equipment shall be considered in the installation design. The effect of vessel motions on the pipe and its coating shall be considered.

Local environmental forces are subject to radical change in offshore areas. As a result, those potential changes should be considered during installation contingency planning as well as during installation design.

A401.9.4 Bottom Soils. Soil characteristics shall be considered in on-bottom stability analysis during the installation period, span analysis, and when installation procedures are developed for the following:

(a) riser installation in pull tubes;

(b) laying horizontal curves in the pipeline routing;

(c) pipeline bottom tows; and

(d) trenching and backfilling.

A401.10 Operational Design Considerations

A401.10.1 Loads for Operational Design. The design of an offshore pipeline system suitable for safe operation shall be based on considerations of the parameters listed in paras. A401.10.2 and A401.10.3. These parameters shall be considered to the extent that they are significant to the proposed system.

All parts of the offshore pipeline system shall be designed for the most critical combinations of operational and environmental loads, acting concurrently, to which the system may be subjected. The most critical combination will depend upon operating criteria during storm conditions. If full operations are to be maintained during storm conditions, then the system shall be designed for concurrent action of full operational and design environmental loads. If operations are to be reduced or discontinued during storm conditions, then the system shall be designed for both:

(a) full operational loads, plus maximum coincidental environmental loads; and

(b) design environmental loads, plus appropriate reduced operational loads.

A401.10.2 Operational Loads. Operational loads which shall be considered are those imposed on the pipeline system during its operation, excluding those resulting from environmental conditions.

Loads which should be considered operational loads include:

(a) weight including (as appropriate) the weight of:

(1) pipe;

(2) coatings and their absorbed water;

(3) attachments to the pipe; and

(4) transported contents;

(b) buoyancy;

(c) internal and external pressure;

(d) thermal expansion and contraction;

(e) residual loads; and

(f) overburden.

Anticipated impact loads, such as those caused by trawl boards, should be considered as an operational load.

A401.10.3 Environmental Loads During Operation. Environmental loads which shall be considered are those imposed on the pipeline system by environmental conditions. Loads which should be considered under this category include, as appropriate, those arising due to:

(a) waves;

(b) current;

(c) wind;

(d) tides;

(e) ice loads (e.g., weight, floating impacts, scouring);

(f) seismic events; and

(g) dynamically induced soil loads (e.g., mud slides, soil liquefaction).

An appropriate design return interval storm shall be selected for the anticipated operational life of the offshore pipeline system but shall not be less than 100 years.

Direction of waves, wind, and currents shall be considered to determine the most critical expected combination of the environmental loads to be used with the operations loads, as described in para. A401.10.1.

A401.10.4 Bottom Soils. When establishing on-bottom stability requirements and maximum allowable spans for irregular seabeds, consideration shall be given to seabed soil characteristics.

A401.11 Hydrostatic Test Design Considerations

A401.11.1 Loads for Hydrostatic Test Design. The design of an offshore pipeline system suitable for safe hydrostatic testing and the development of offshore pipeline hydrostatic test procedures shall be based on consideration of the parameters listed in paras. A401.11.2 and A401.11.3. These parameters shall be considered to the extent that they are significant to the proposed test.

All parts of the offshore pipeline system shall be designed for the most critical combinations of hydrostatic test and environmental loads, acting concurrently, to which the system may be subjected.

A401.11.2 Hydrostatic Test Loads. Hydrostatic test loads which shall be considered are those imposed on the offshore pipeline system under anticipated test conditions, excluding those resulting from environmental conditions.

Loads which should be considered hydrostatic test loads include:

(a) weight, including (as appropriate) the weight of:

(1) pipe;

(2) coatings and their absorbed water;

(3) attachments to the pipe; and

(4) fresh water or sea water used for hydrostatic test;

(b) buoyancy;

(c) internal and external pressure;

(d) thermal expansion and contraction;

(e) residual loads; and

(f) overburden.

A401.11.3 Environmental Loads During Hydrostatic Test. Environmental loads which shall be considered are those imposed on the pipeline system by environmental conditions. Loads which should be considered under this category include, as appropriate, those arising due to:

(a) waves;

(b) current;

(c) wind; and

(d) tides.

An appropriate design return interval storm shall be selected for the anticipated hydrostatic test duration but shall not be less than 1 year.

Direction of waves, wind, and currents shall be considered to determine the most critical expected combination of the environmental loads to be used with the hydrostatic test loads, as described in para. A401.11.1.

A401.11.4 Bottom Soils. When establishing on-bottom stability requirements and maximum allowable spans for irregular seabeds, consideration shall be given to seabed soil characteristics.

A401.12 Route Selection Considerations

(a) Offshore pipeline routes shall be selected to minimize the adverse effects of:

(1) installation and related environmental loads (see para. A401.9);

(2) operational and related environmental loads (see para. A401.10); and

(3) hydrostatic test and related environmental loads (see para. A401.11).

(b) Selection of offshore pipeline routes shall consider the capabilities and limitations of anticipated construction equipment.

(c) Surveys of the pipeline route shall be conducted to identify:

(1) seabed materials;

(2) subsea (including sub-bottom) and surface features which may represent potential hazards to the pipeline construction and operations;

(3) subsea (including sub-bottom) and surface features which may be adversely affected by pipeline construction and operations, including archaeological and sensitive marine areas;

(4) turning basins;

(5) anchorage areas;

(6) shipping lanes; and

(7) foreign pipeline and other utility crossings.

(d) Routing shall be selected to avoid, to the extent practical, the identified hazards.

A402 DESIGN CRITERIA

A402.3 Allowable Stresses and Other Stress Limits

The allowable stresses and other stress limits given in para. 402.3 are superseded by the provisions of paras. A402.3.4 and A402.3.5.

Design and installation analyses shall be based upon accepted engineering methods, material strengths, and applicable design conditions.

A402.3.4 Strength Criteria During Installation and Testing

(a) Allowable Stress Values. The maximum longitudinal stress due to axial and bending loads during installation shall be limited to a value that prevents pipe buckling and that will not impair the serviceability of the installed pipeline system. Other stresses resulting from pipeline installation activities, such as spans, shall be limited to the same criteria. Instead of a stress criterion, an allowable installation strain limit may be used.

(b) Design Against Buckling. The offshore pipeline system shall be designed and installed in a manner to prevent local buckling of the pipe wall, collapse, and column buckling during installation. Design and installation procedures shall consider the effect of external hydrostatic pressure; bending, axial, and torsional loads; impact; mill tolerances in the wall thickness; out-of-roundness; and other applicable factors. Consideration shall also be given to mitigation of propagation buckling which may follow local buckling or denting. The pipe wall thickness shall be selected to resist collapse due to external hydrostatic pressure.

(c) Design Against Fatigue. The pipeline shall be designed and installed to limit anticipated stress fluctuations to magnitudes and frequencies which will not impair the serviceability of the installed pipeline. Loads which may cause fatigue include wave action and vibrations induced by vortex shedding. Pipelines and riser spans shall be designed to prevent vortex-induced resonant vibrations, when practical. When vibrations must be tolerated, the resulting stresses due to vibration shall be considered. If alternative acceptance standards for girth welds in API Standard 1104 are used, the cyclic stress analysis shall include the determination of a predicted fatigue spectrum to which the pipeline is exposed over its design life.

(d) Design Against Fracture. Prevention of fractures during installation shall be considered in material selection in accordance with the requirements of para. A423.2. Welding procedures and weld defect acceptance criteria shall consider the need to prevent fractures during installation. See paras. 434.8.5 and A434.8.5.

(e) Design Against Loss of In-Place Stability. Design against loss of in-place stability shall be in accordance with the provisions of para. A402.3.5(e), except that the installation design wave and current conditions shall be based upon the provisions of para. A401.9.3. If the pipeline is to be trenched, it shall be designed for stability during the period prior to trenching.

(f) Impact. During the period when the pipe is susceptible to impact damage during installation and testing, consideration shall be given to impacts due to:

(1) anchors;
(2) trawl boards;
(3) vessels;
(4) ice keels; and
(5) other foreign objects.

(g) Residual Stresses. The pipeline system shall normally be installed in a manner so as to minimize residual stresses. The exception shall be when the designer purposefully plans for residual stresses (e.g., reeled pipe, cold springing of risers, pull-tube risers).

(h) Flexible Pipe. The manufacturer's recommended installation procedures should be adhered to during installation. Flexible pipe shall be designed or selected to prevent failure due to the combined effects of external pressure, internal pressure, torsional forces, axial forces, and bending. (See API RP 17B.)

A402.3.5 Strength Criteria During Operations

(a) Allowable Stress Values. Allowable stress values for steel pipe during operation shall not exceed those calculated by the equations in para. A402.3.5(a), (1) through (3).

(1) Hoop Stress. For offshore pipeline systems, the tensile hoop stress due to the difference between internal and external pressures shall not exceed the values given below.

NOTE: Sign convention is such that tension is positive and compression is negative.

$$S_h \le F_1\,(S_y)$$

$$S_h = (P_i - P_e)\frac{D}{2t} \qquad \left(S_h = (P_i - P_e)\frac{D}{20t}\right)$$

where

S_h = hoop stress, psi (MPa)
P_i = internal design pressure, psi (bar)
P_e = external pressure, psi (bar)

TABLE A402.3.5(a)
DESIGN FACTORS FOR OFFSHORE PIPELINE SYSTEMS

Location	Hoop Stress F_1	Longitudinal Stress F_2	Combined Stress F_3
Pipeline	0.72	0.80	0.90
Riser and Platform Piping [Note (1)]	0.60	0.80	0.90

GENERAL NOTE: In the setting of design factors, due consideration has been given to, and allowance has been made for, the underthickness tolerance and maximum allowable depth of imperfections provided for in the specifications approved by the Code.

NOTE:
(1) Platform piping does not include production facility piping on a platform; see definitions para. A400.2.

D = nominal outside diameter of pipe, in. (mm)
t = nominal wall thickness, in. (mm)
F_1 = hoop stress design factor from Table A402.3.5(a)
S_y = specified minimum yield strength, psi (MPa)

(2) Longitudinal Stress. For offshore pipeline systems, the longitudinal stress shall not exceed values found from

$$|S_L| \le F_2(S_y)$$

where
S_L = maximum longitudinal stress, psi (positive tensile or negative compressive) (MPa)
= $S_a + S_b$ or $S_a - S_b$, whichever results in the larger stress value
S_a = axial stress, psi (positive tensile or negative compressive) (MPa)
= F_a/A
F_a = axial force, lb (N)
A = cross-sectional area of pipe material, in.^{2} (mm^2)
S_b = maximum resultant bending stress, psi (MPa)
= $\pm\sqrt{(i_iM_i)^2 + (i_oM_o)^2}/Z$
M_i = in-plane bending moment, in.-lb (N·m)
M_o = out-of-plane bending moment, in.-lb (N·m)
i_i = in-plane stress intensification factor from Fig. 419.6.4(c)
i_o = out-of-plane stress intensification factor from Fig. 419.6.4(c)
Z = section modulus of the pipe, in.^{3} (cm^3)
F_2 = longitudinal stress design factor from Table A402.3.5(a)
S_y = specified minimum yield strength, psi (MPa)
$|\,|$ = absolute value

(3) Combined Stress. For offshore pipeline systems, the combined stress shall not exceed the value given by the Maximum Shear Stress Equation (Tresca Combined Stress):

$$2\left[\sqrt{\left(\frac{S_L - S_h}{2}\right)^2 + S_t^2}\right] \le F_3(S_y)$$

where
S_L = maximum longitudinal stress, psi (positive tensile or negative compressive) (MPa)
= $S_a + S_b$ or $S_a - S_b$, whichever results in the larger stress value
S_a = axial stress, psi (positive tensile or negative compressive) (MPa)
= F_a/A
F_a = axial force, lb (N)
A = pipe cross-sectional area, in.^{2} (mm^2)
S_b = maximum resultant bending stress, psi (MPa)
= $\pm\sqrt{(i_iM_i)^2 + (i_oM_o)^2}/Z$
M_i = in-plane bending moment, in.-lb (N·m)
M_o = out-of-plane bending moment, in.-lb (N·m)
i_i = in-plane stress intensification factor from Fig. 419.6.4(c)
i_o = out-of-plane stress intensification factor from Fig. 419.6.4(c)
Z = section modulus of the pipe, in.^{3} (cm^3)
S_h = hoop stress, psi (MPa)
S_y = specified minimum yield strength, psi (MPa)
S_t = torsional stress, psi (MPa)
= $M_t/2Z$
M_t = torsional moment, in.-lb (N·m)
F_3 = combined stress design factor from Table A402.3.5(a)

Alternatively, the Maximum Distortional Energy Theory (Von Mises Combined Stress) may be used for limiting combined stress values. Accordingly, the combined stress should not exceed values given by:

$$\sqrt{S_h^2 - S_L S_h + S_L^2 + 3S_s^2} \le F_3(S_y)$$

(4) Strain. When the pipeline experiences a predictable noncyclic displacement of its support (e.g., fault movement along the pipeline route or differential subsidence along the line) or pipe sag before support contact, the longitudinal and combined stress limits may be replaced with an allowable strain limit, so long as the consequences of yielding do not impair the serviceability of the installed pipeline. The permissible maximum longitudinal strain depends upon the ductility of the material, any previously experienced plastic strain, and the buckling behavior of the pipe. Where plastic strains are anticipated, the pipe eccentricity, pipe out-of-roundness, and the ability of the weld to undergo such strains without detrimental effect should be considered. These same criteria may be applied to pull tube or bending shoe risers or pipe installed by the reel method.

(b) Design Against Buckling. The pipeline shall be designed with an adequate margin of safety to prevent local buckling of the pipewall, collapse, and column buckling during operations. Design and operating procedures shall consider the effect of external hydrostatic pressure; bending, axial, and torsional loads; impact; mill tolerances in the wall thickness, out-of-roundness, and other applicable factors. Consideration shall also be given to mitigation of propagation buckling which may follow local buckling or denting. The pipe wall thickness shall be selected to resist collapse due to external hydrostatic pressure.

(c) Design Against Fatigue. The pipeline shall be designed and operated to limit anticipated stress fluctuations to magnitudes and frequencies which will not impair the serviceability of the pipeline. Loads which may cause fatigue include internal pressure variations, wave action, and pipe vibration, such as that induced by vortex shedding. Pipe and riser spans shall be designed so that vortex-induced resonant vibrations are prevented, whenever practical. When vibrations must be tolerated, the resulting stresses due to vibration shall be considered in the combined stress calculations in para. A402.3.5(a). In addition, calculated fatigue failure shall not result during the design life of the pipeline and risers.

(d) Design Against Fracture. Prevention of fractures during operation shall be considered in material selection in accordance with the requirements of para. A423.2. Welding procedures and weld defect acceptance criteria shall consider the need to prevent fractures during operation. See paras. 434.8.5 and A434.8.5.

(e) Design Against Loss of In-Place Stability

(1) General. Pipeline design for lateral and vertical on-bottom stability is governed by permanent features such as sea floor bathymetry and soil characteristics and by transient events, such as hydrodynamic, seismic, and soil behavior events, having a significant probability of occurrence during the life of the system. Design conditions to be considered are provided in para. A402.3.5(e), (2) through (4).

The pipeline system shall be designed to prevent horizontal and vertical movements or shall be designed so that any movements will be limited to values not causing allowable stresses and strains to be exceeded. Typical factors to be considered in the stability design include

- wave and current forces,
- soil properties,
- scour and resultant spanning,
- soil liquefaction, and
- slope failure.

Stability may be obtained by such means as, but not limited to

- adjusting pipe submerged weight,
- trenching and or covering of pipe, and
- anchoring.

When calculating hydrodynamic forces, the fact that wave forces vary spatially along the length of the pipeline may be taken into account.

Two on-bottom stability design conditions that shall be considered are installation and operational.

(2) Design Wave and Current Conditions. Operational design wave and current conditions shall be based upon an event having a minimum return interval of not less than 100 years. The most unfavorable expected combination of wave and current conditions shall be used. Maximum wave and maximum current conditions do not necessarily occur simultaneously. When selecting the most unfavorable condition, consideration must be given to the timing of occurrence of the wave and current direction and magnitude.

(3) Stability Against Waves and Currents. The submerged weight of the pipe shall be designed to resist or limit movement to amounts which do not cause the longitudinal and combined stresses, as calculated by the equations in para. A402.3.5(a), to exceed the limits specified in para. A402.3.5(a). The submerged weight may be adjusted by weight coating and/or increasing pipe wall thickness. Hydrodynamic forces shall be based on the wave and current values for the design condition at the location. See para. A402.3.5(e)(2).

Wave and current direction and concurrence shall be considered.

The pipeline and its appurtenances may be lowered below bottom grade to provide stability.

Backfill or other protective covering options shall use materials and procedures which preclude damage to the pipeline and coatings.

Anchoring may be used alone or in conjunction with other options to maintain stability. The anchors shall be designed to withstand lateral and vertical loads expected from the design wave and current condition. Anchors shall be spaced to prevent excessive stresses in the pipe. Scour shall be considered in the design of the anchoring system. The effect of anchors on the cathodic protection system shall be considered.

Intermittent block type, clamp-on, or set-on weights (river weights) shall not be used on offshore pipelines where there is a potential for the weight to become unsupported because of scour.

(4) Shore Approaches. Pipe in the shore approach zone shall be installed on a suitable above-water structure or lowered or bored to the depth necessary to prevent scouring, spanning, or stability problems which affect integrity and safe operation of the pipeline during its anticipated service life. Seasonal variation in the near-shore thickness of sea floor sediments and shoreline erosion over the pipeline service life shall be considered.

(5) Slope Failure and Soil Liquefaction. The pipelines shall be designed for slope failure in zones where they are expected (mud slide zones, steep slopes, areas of seismic slumping). If it is not practical to design the pipeline system to survive the event, the pipeline shall be designed for controlled breakaway with provisions to minimize loss of the pipeline contents.

Design for the effects of liquefaction shall be performed for areas of known or expected occurrence. Soil liquefaction normally results from cyclic wave overpressures or seismic loading of susceptible soils. The bulk specific gravity of the pipeline shall be selected, or alternative methods shall be selected to ensure both horizontal and vertical stability.

Seismic design conditions used to predict the occurrence of bottom liquefaction or slope failure shall be at least as severe as those used for the operating design strength calculations for the pipeline. Occurrence of soil liquefaction due to wave overpressures shall be based on a storm interval of not less than 100 years.

(6) Bottom Soils. The pipe-soil interaction factors that are used shall be representative of the bottom conditions at the site.

(f) Impact. During operations, consideration shall be given to impacts due to:

(1) anchors;

(2) trawl boards;

(3) vessels;

(4) ice keels; and

(5) other foreign objects.

A402.3.6 Design for Expansion and Flexibility. Unburied subsea pipeline systems and platform piping shall be considered as "aboveground piping" [see para. 419.1(a), (b), and (d)] where such definition is applicable.

Thermal expansion and contraction calculations shall consider the effects of fully saturated backfill material on soil restraint.

Allowable strength criteria shall be in accordance with para. A402.3.5 in lieu of the allowables listed in para. 419.6.4. Equations in para. 419.6.4 are valid for calculating the indicated stresses. See paras. A401.10 and A401.11 for loads which must be considered in design. Where appropriate, allowable strain criteria in para. A402.3.5(a)(4) may be used in lieu of allowable stress criteria.

When an offshore pipeline is to be laid across a known fault zone or in an earthquake-prone area, consideration shall be given to the need for flexibility in the pipeline system and its components to minimize the possibility of damage due to seismic activity. Flexibility in the pipeline system may be provided by installation of the pipeline on or above the seabed and/or by use of breakaway couplings, slack loops, flexible pipe sections, or other site-specific solutions.

A402.3.7 Design of Clamps and Supports. Clamps and supports shall be designed such that a smooth transfer of loads is made from the pipeline or riser to the supporting structure without highly localized stresses due to stress concentrations. When clamps are to be welded to the pipe, they shall fully encircle the pipe and be welded to the pipe by a full encirclement weld. The support shall be attached to the encircling member and not the pipe.

All welds to the pipe shall be nondestructively tested. Clamps and supports shall be designed in accordance with the requirements of API RP 2A-WSD.

Clamps and support design shall consider the corrosive effects of moisture-retaining gaps and crevices and galvanically dissimilar metals.

A402.3.8 Design of Connectors and Flanges. Connectors and flanges shall be designed or selected to provide the smooth transfer of loads and prevent excessive deformation of the attached pipe.

A402.3.9 Design of Structural Pipeline Riser Protectors. Where pipeline risers are installed in locations subject to impact from marine traffic, protective devices shall be installed in the zone subject to damage to protect the pipe and coating.

A402.3.10 Design and Protection of Special Assemblies. Design of special assemblies, such as connections, subsea tie-in assemblies, subsea valves, expansion loops, seabed riser connections, and subsea pipeline manifolds, shall consider the additional forces and effects imposed by a subsea environment. Such additional considerations include design storm currents and potential for seabed movement in soft sediments, soil liquefaction, increased potential for corrosion, thermal expansion and contraction, and stress due to installation procedures.

Appropriate measures shall be taken to protect special assemblies in areas where the assemblies are subject to damage by outside forces, such as fishing and marine construction activities.

A402.3.11 Design of Flexible Pipe. Due to its composite makeup, the mechanical behavior of flexible pipe is significantly different from that of steel pipe. Flexible pipe may be used for offshore pipelines if calculations and/or test results verify that the pipe can safely withstand loads considered in paras. A401.9, A401.10, and A401.11. Careful consideration should be given to the use of flexible pipe due to its permeable nature and possible rapid decompression failure of the liner material and collapse of the inner liner due to residual gas pressure in the annulus upon pipeline depressurization. (See API RP 17B.)

A402.3.12 Design of Pipeline Crossings. Subsea pipeline crossings shall be designed to provide a minimum 12 in. (300 mm) separation between the two lines. Dielectric separation of the two pipelines shall be considered in design of pipeline crossings. Soil settlement, scour, and cyclical loads shall be considered in the design of pipeline crossings in order to ensure that the separation is maintained for the design life of both lines.

When two liquid pipelines cross, the longitudinal stress and combined stress, as calculated by the equations in para. A402.3.5(a), shall not exceed the limits specified in Table A402.3.5(a). Where appropriate, allowable strain criteria in para. A402.3.5(a)(4) may be used in lieu of allowable stress criteria. Where crossing pipelines are governed by different codes, the allowable stress limits shall be in accordance with the provisions of the applicable code.

A402.4 Allowances

A402.4.3 Weld Joint Factors. Pipe with a weld joint factor less than 1 (Table 402.4.3) shall not be used in offshore pipeline systems.

A404 PRESSURE DESIGN OF COMPONENTS

A404.1 Straight Pipe

A404.1.1 General

(b) For offshore pipeline systems, the applicable allowable stress value specified and defined in para. 404.1.1(b) shall be as follows:

$$S = F_1 (S_y)$$

where F_1 and S_y are defined in para. A402.3.5.

A404.3 Intersections

A404.3.1 Branch Connections

(d) Reinforcement of Single Openings

(1) Pipe that has been cold-worked solely for the purpose of increasing the yield strength to meet the specified minimum yield strength is prohibited in offshore liquid pipeline systems. This does not preclude the use of pipe that has been cold-worked specifically for the purpose of meeting dimensional requirements.

(e) Reinforcement of Multiple Openings

(4) Pipe that has been cold-worked solely for the purpose of increasing the yield strength to meet the specified minimum yield strength is prohibited in offshore liquid pipeline systems. This does not preclude the use of pipe that has been cold-worked specifically for the purpose of meeting dimensional requirements.

A405 PIPE

A405.2 Metallic Pipe

A405.2.1 Steel Pipe

(a) The provisions of para. 405.2.1(a) are superseded by the following. New pipe of the specifications listed in Table 423.1 may be used in accordance with the design equations of para. 404.1.2 subject to para A404.1.1 and to the testing requirements of paras. 437.1.4(a)(1), 437.1.4(a)(2), 437.1.4(a)(4), 437.1.4(a)(5), 437.1.4(b), 437.1.4(c), 437.4.1, and A437.1.4.

(c) Para. 405.2.1(c) does not apply.

(d) Pipe that has been cold-worked solely for the purpose of increasing the yield strength to meet the specified minimum yield strength is prohibited in off-

shore liquid pipeline systems. This does not preclude the use of pipe that has been cold-worked specifically for the purpose of meeting dimensional requirements.

A405.3 Flexible Pipe

Selection of flexible pipe shall be in accordance with API RP 17B. (See also para. A402.3.11.)

A406 FITTINGS, ELBOWS, BENDS, AND INTERSECTIONS

A406.2 Bends, Miters, and Elbows

A406.2.2 Mitered Bends. Mitered bends are prohibited in offshore liquid pipeline systems.

A406.4 Reductions

A406.4.2 Orange Peel Swages. Orange peel swages are prohibited in offshore liquid pipeline systems, other than temporary construction components or other non-pressure-containing components.

A406.6 Closures

A406.6.4 Fabricated Closures. Orange peel bull plugs and fishtails are prohibited in offshore liquid pipeline systems, other than temporary construction components or other non-pressure-containing components.

A407 VALVES

A407.1 General

Paragraph 407.1(b) does not apply. Cast iron or ductile iron valves are prohibited for applications in offshore liquid pipeline systems.

A408 FLANGES, FACINGS, GASKETS, AND BOLTING

A408.1 Flanges

A408.1.1 General. Paragraph 408.1.1(c) does not apply. Cast iron or ductile iron flanges are prohibited for applications in offshore liquid pipeline systems.

A408.3 Flange Facings

A408.3.1 General

(c) Ring joint-type flanges are preferred in offshore liquid pipeline systems.

A409 USED PIPING COMPONENTS AND EQUIPMENT

Used piping components, such as fittings, elbows, bends, intersections, couplings, reducers, closures, flanges, valves, and equipment, may be reused as noted in para. 409, except that the reuse of piping components of unknown specification is prohibited in offshore liquid pipeline systems.

A410 OTHER DESIGN CONSIDERATIONS

A410.1 Pigs and Internal Inspection Tools

When specifying in-line piping components for offshore pipelines, consideration shall be given to the need for running pipeline pigs and internal inspection tools. Selection of bend radius, launcher and receiver traps, bend configuration, internal diameter variations (including ovality), and other internal obstructions shall allow the passage of such devices, except where not practical.

A410.2 Special Components

System components which are not specifically covered in this Code shall be validated for fitness by either:

(a) documented full-scale prototype testing of the components or special assemblies; or

(b) a documented history of successful usage of these components or special assemblies produced by the same design method.

Documentation shall include design and installation methods which have been proven for the service for which the component is intended.

Care should be exercised in any new application of existing designs to ensure suitability for the intended service.

A414 THREADED JOINTS

A414.1 General

Threaded connections for in-line piping component sizes, NPS 2 (60.3 mm) or larger, are prohibited in offshore pipeline systems, except as permitted in para. A410.2.

A419 EXPANSION AND FLEXIBILITY

See para. A402.3.6 for additional provisions.

A421 DESIGN OF PIPE-SUPPORTING ELEMENTS

See para. A402.3.7 for additional provisions.

A423 MATERIALS — GENERAL REQUIREMENTS

A423.1 Acceptable Materials and Specifications

Concrete weight coating materials (cement, aggregate, reinforcing steel) shall meet or exceed the requirements of applicable ASTM standards.

Flexible pipe shall be manufactured from materials meeting the requirements of API RP 17B and ASTM or ASME standards applicable to the materials selected by the designer.

A423.2 Limitations on Materials

"Unidentified" pipe, plastic pipe, ASTM A 120 pipe, plastic pipe with nonmetallic reinforcement, cast iron pipe, ductile iron pipe, and pipe that has been cold-worked in order to meet the specified minimum yield strength are prohibited in offshore liquid pipeline systems. This does not preclude the use of pipe that has been cold-worked specifically for the purpose of meeting dimensional requirements.

In addition to the requirements contained in referenced standards, certain other requirements may be considered for components used offshore, depending on water depth, water temperature, internal pressure, product composition, product temperature, installation method and/or other loading conditions. For example, consideration of additional limitations or requirements for pipe may include one or more of the following:

(a) wall thickness tolerance;

(b) outside diameter tolerance;

(c) out-of-roundness tolerance;

(d) maximum and minimum yield and tensile strengths;

(e) pipe chemistry limitations;

(f) fracture toughness;

(g) hardness; and

(h) pipe mill hydrostatic testing and other nondestructive testing.

For sour service (H_2S), refer to NACE MR-01-75.

A434 CONSTRUCTION

A434.2 Inspection

Repairs required during new construction shall also be in accordance with paras. A434.8 and A461.1.2.

A434.3 Right-of-Way

A434.3.3 Survey and Staking or Marking. The route of the offshore pipeline shall be surveyed, and the pipeline shall be properly located within the right-of-way by maintaining survey route markers or by surveying during installation.

A434.4 Handling, Hauling, Stringing, and Storing

Transportation by truck or other road vehicles, rail cars, and marine vessels shall be performed in such a manner as to avoid damage to the pipe and any preapplied coatings. Transportation of line pipe shall conform to the requirements of API RP 5LW or API RP 5L1, as applicable.

A434.6 Ditching

The provisions of para. 434.6 are not applicable for offshore pipelines. Offshore pipelines should be trenched where necessary for stability, mechanical protection, or prevention of interference with maritime activities.

The methods and details of the pipeline trenching and lowering operations shall be based on site-specific conditions. Methods and details shall be selected to prevent damage to the pipe, coating, and pipeline appurtenances.

A434.7 Bends, Miters, and Elbows

Miter bends shall not be used in offshore liquid pipeline systems.

A434.7.1 Bends Made From Pipe

(a) Pipe that has been cold-worked solely for the purpose of increasing the yield strength to meet the specified minimum yield strength is prohibited in offshore liquid pipeline systems. This does not preclude the use of pipe that has been cold-worked specifically for the purpose of meeting dimensional requirements.

A434.8 Welding

A434.8.3 Welding Qualifications. Welding procedures and welders performing hyperbaric welding on offshore pipeline systems shall be qualified in accor-

dance with the testing provisions of either API Std. 1104 or ASME Section IX, as supplemented by AWS D3.6 for Type "O" welds.

A434.8.5 Welding Quality

(a) Inspection Methods

(2) Welds in offshore pipeline systems may also be evaluated on the basis of para. A434.8.5(b).

(4) The requirements of para. 434.8.5(a)(4) are superseded by the following provisions. All circumferential welds on offshore pipeline systems shall meet the requirements in para. 434.8.5(a) for a pipeline which would operate at a hoop stress of more than 20% of the specified minimum yield strength of the pipe. One hundred percent of the total number of circumferential butt welds on offshore pipeline systems shall be nondestructively inspected, if practical; but in no case shall less than 90% of such welds be inspected. The inspection shall cover 100% of the length of such inspected weld.

(b) Standards of Acceptability. For girth welds in offshore pipeline systems, alternative flaw acceptance limits may be based upon fracture mechanics analysis and fitness-for-purpose criteria as described by API Std. 1104. Such alternative acceptance standards shall be supported by appropriate stress analyses, supplementary welding procedure test requirements, and nondestructive examinations beyond the minimum requirements specified herein. The accuracy of the nondestructive techniques for flaw depth measurement shall be verified.

A434.8.9 Stress Relieving

(a) On offshore pipeline systems, the demonstration specified in para. 434.8.9(a) shall be conducted on materials and under conditions which simulate, as closely as practical, the actual production welding.

A434.11 Backfilling

Backfilling of trenched offshore pipelines is not normally required but may sometimes be utilized to provide additional stability or protection.

A434.13 Special Crossings

A434.13.1 Water Crossings. See para. A402.3.5(e)(3) concerning the use of river weights.

A434.14 Offshore Pipeline Construction

A434.14.1 Pipe Depth and Alignment. Plans and specifications shall describe alignment of the pipeline, its design depth below mean water level, and the depth below the sea bottom, if trenching is prescribed. Special consideration shall be given to depth of cover and other means of protecting the pipeline in the surf zone and other areas of potential hazards such as near platforms, anchorage areas, and shipping fairways.

A434.14.2 Installation Procedures and Equipment Selection. Installation procedures shall be prepared prior to beginning construction. Installation procedures shall address the design considerations in para. A401.9 and strength considerations in para. A402.3.4.

A434.14.3 Movement of Existing Pipelines. Consideration should be given to reducing operating pressures in the existing pipelines to obtain the lowest practical stress levels prior to movement of the existing lines. Whether the pipeline pressure is reduced or not, the following steps should be taken prior to movement of the existing lines:

(a) perform a physical survey to determine the actual position of the pipeline;

(b) determine wall thickness and mechanical properties of the existing pipeline section to be moved;

(c) investigate possible pipe stress that may exist in the pipeline in its present condition;

(d) calculate additional stresses imposed by the proposed movement operation; and

(e) prepare a detailed procedure for the proposed movement.

Investigation of the possible pipe stresses that may be induced in the existing pipeline during the relocation should be performed regardless of the anticipated internal pressure. This investigation should consider appropriate elevation tolerances for the lowering. Pipe stresses resulting from the relocation should not exceed the criteria in para. A402.3.4, and pipe stresses resulting from existing pipeline operation after lowering should not exceed the criteria in para. A402.3.5.

A434.15 Block and Isolating Valves

A434.15.1 General

(a) Block and isolating valves shall be selected to provide timely closure and to limit both property and environmental damage and provide safety under emergency conditions.

(b) On offshore platforms, consideration shall be given to locating block and isolating valves, or valve operator controls where used, in areas that are readily accessible under emergency conditions.

(c) Submerged valves shall be marked or spotted by survey techniques and recorded on permanently retained as-built records to facilitate location when operation is required.

A434.18 Line Markers

Line markers are not required on offshore pipeline systems.

A436 INSPECTION

A436.2 Qualification of Inspectors

In addition to the requirements of para. 436.2 offshore inspection personnel shall be capable of inspecting the following, as applicable:

- offshore vessel positioning systems;
- diving operations;
- remotely operated vehicle (ROV) operations;
- pipeline trenching and burial operations;
- special services for testing and inspection of offshore pipeline facilities, such as subsea pipeline lateral tie-ins, and subsea pipeline crossings as may be required; and
- pipelay parameters.

A436.5 Type and Extent of Examination Required

A436.5.1 Visual

(b) Construction

(9) When offshore pipelines are trenched, the condition of the trench, trench depth, and fit of the pipe to the trench shall be inspected when feasible.

(11) When offshore pipelines are to be backfilled, the backfilling operations shall be inspected for quality of backfill, possible damage to the pipe coating, and depth of cover.

(12) Pipelines shall be inspected for spans.

(13) Pipeline crossings shall be inspected for specified separation.

(15) Where specified, special assemblies and protection measures as described in A402.3.10 shall be inspected for protection against damage by outside forces, such as fishing and other marine activities.

A437 TESTING

A437.1 General

A437.1.4 Testing After New Construction

(a) Systems or Parts of Systems

(3) Provisions of para. 437.1.4(a)(3) are superseded by the following. All pipe and pressure-containing piping components shall be tested in accordance with the provisions of para. 437.1.4(a)(2).

(b) Testing Tie-Ins. Nonwelded tie-in connections shall be observed for leaks at operating pressure. Tie-in welds and girth welds joining lengths of pretested pipe shall be inspected by radiographic or other accepted nondestructive methods in accordance with para. A434.8.5(a)(4), if system is not pressure-tested after tie-in.

(d) Hydrostatic Test Medium. The hydrostatic test medium for all offshore pipeline systems shall be water, except in arctic areas. Additives to mitigate the effects of corrosion, biofouling, and freezing should be considered. Such additives should be suitable for the methods of disposal of the test medium.

In arctic areas where freezing of water is a restraint, the use of air, inert gas, or glycol is allowable, provided appropriate detail considerations are addressed.

Disposal of all materials shall be done in an environmentally safe manner.

(e) Diameter Restrictions. Testing for buckles, dents, and other diameter restrictions shall be performed after installation. Testing shall be accomplished by passing a deformation detection device through the pipeline section, or by other methods capable of detecting a change in pipe cross-section. Pipe having deformation which affects the serviceability of the pipeline facilities shall be repaired or replaced. Consideration should also be given to repairing ovality which may interfere with pigging operations or internal inspections.

A437.4 Test Pressure

A437.4.3 Leak Testing. Provisions of para. 437.4.3 are not applicable for offshore pipeline systems.

A437.6 Qualification Tests

Pipe of unknown specification and ASTM A 120 specification pipe are not allowed in offshore pipeline systems. See para. A423.1.

A437.7 Records

"As-built" records shall also include the location of anodes and buckle arrestors (if used) by pipe joint installation sequence. Subsea valve, tie-in, and other special assembly locations shall be recorded by coordinates.

A450 OPERATION AND MAINTENANCE PROCEDURES AFFECTING THE SAFETY OF LIQUID TRANSPORTATION PIPING SYSTEMS

A450.2 Operation and Maintenance Plans and Procedures

The provisions of paras. 450.2(d), 450.2(e), and 450.2(i) are superseded by the following:

(d) Have a plan for reviewing conditions affecting the integrity and safety of the pipeline system, including provisions for periodic patrolling and reporting of construction activity and changes in conditions.

(e) Establish and maintain liaisons with local offshore authorities who issue permits in order to prevent accidents caused by new construction. Establish and maintain liaisons with available offshore firefighting and pollution control entities.

(i) In establishing plans and procedures, give particular attention to those portions of the system presenting the greatest hazard to the public and to the environment in the event of emergencies or because of construction or extraordinary maintenance requirements.

A451 PIPELINE OPERATION AND MAINTENANCE

A451.3 Markers

The provisions of para. 451.3 do not apply to offshore pipeline systems.

A451.4 Right-of-Way Maintenance

The provisions of para. 451.4 do not apply to offshore pipeline systems.

A451.5 Patrolling

(a) The provisions of para. 451.5(a) and (b) are superseded by the following. Each offshore pipeline system operator shall maintain a periodic pipeline patrol program to observe surface conditions on, and adjacent to, the pipeline right-of-way, indication of leaks, construction activity other than that performed by the operator, and any other factors affecting the safety and operation of the pipeline. Consideration should be given to increased patrols in areas more susceptible to damage by outside forces. Such areas are listed in A451.11.

A451.6 Pipeline Repairs

A451.6.1 General. Additional requirements for repairs to offshore pipeline systems are as follows:

• Repair operations shall not result in imposed deformations which would impair the integrity of the pipe materials, and weight or protective coating.

• Subsea equipment used in the repair of offshore pipeline systems shall be carefully controlled and monitored to avoid damaging the pipeline, external coating, or cathodic protection system.

• When lifting or supporting pipe during repairs, the curvature of a pipe sag bend and overbend shall be controlled to prevent overstressing, denting, or buckling the pipe or damaging the coating. Lifting equipment shall be selected to comply with this requirement.

• Wave and current loads shall be considered in determining total imposed stresses and cyclical loadings in both surface and subsurface repairs.

• When pipe is repaired damaged coating shall be repaired.

• Replacement pipe and components shall be protected from corrosion.

Consideration should be given to obtaining pipe-to-water potentials during the repair operations to verify conformance to cathodic protection requirements.

A451.6.2 Disposition of Defects

(b) Allowable Pipeline Repairs

(4) Patches shall not be used on offshore pipeline systems.

(6) Partial encirclement half soles shall not be used on offshore pipeline systems.

(c) Repair Methods

(5) Patches shall not be used on offshore pipeline systems.

(8) Welded fittings allowed by para. 451.6.2(c)(8) to cover defects shall not be used in offshore pipeline systems.

(13) Half soles for repairs in offshore pipeline systems are prohibited.

A451.6.4 Repair of Flexible Pipe

(a) Major Structural Damage. If the serviceability of the flexible pipe is impaired, the damaged pipe section shall be replaced.

(b) Surface Cuts. In the event of surface cuts and abrasions which do not expose the load-carrying members to potential corrosion, the repair shall be performed in a manner recommended by the manufacturer.

A451.7 Derating a Pipeline to a Lower Operating Pressure

(c) If a component is installed during the repair that has a maximum pressure rating less than the allowable operating pressure of the pipeline, the pipeline shall be derated to the pressure rating of the component, analyzed in accordance with 451.1(a).

A451.8 Valve Maintenance

Provisions of para. 451.8 do not apply to offshore pipeline systems. Pipeline block valves that would be required by the Emergency Plan (see paras. 454 and A454) to be operated during an emergency shall be

inspected periodically, and fully or partially operated at least once a year.

A451.9 Railroads and Highways Crossing Existing Pipelines

The provisions of para. 451.9 do not apply to offshore pipeline systems.

A451.10 Offshore Pipeline Risers

The provisions of para. 451.10 do not apply to offshore pipeline systems.

A451.11 Inspection

As a means of maintaining the integrity of its pipeline system, each operating company shall establish and implement procedures for continuing surveillance of its facilities. Studies shall be initiated and appropriate action taken when unusual operating and maintenance conditions occur, such as failures, leakage history, unexplained changes in flow or pressure, or substantial changes in cathodic protection requirements.

Consideration should be given to inspection of pipelines and pipeline protection measures in areas most susceptible to damage by outside forces. Such areas may include shore crossings, areas near platforms, shipping fairways, pipeline crossings, span rectifications, subsea assemblies, and shallow water areas. If the operating company discovers that the cover or other conditions do not meet the original design, it shall determine whether the existing conditions are unacceptable. If unacceptable, the operating company shall provide additional protection by replacing cover, lowering the line, installing temporary or permanent warning markers or buoys, or using other suitable means.

When such studies indicate the facility is in an unsatisfactory condition, a planned program shall be initiated to abandon, replace, or repair. If such a facility cannot be repaired or abandoned, the maximum allowable operating pressure shall be reduced commensurate with the requirements described in paras. 451.7 and A451.7.

Offshore pipeline risers shall be visually inspected annually for physical damage and corrosion in the splash zone and above. Consideration should also be given to periodic visual inspection of the submerged zone of the riser. The extent of any observed damage shall be determined, and if the serviceability of the riser is affected, the riser shall be repaired or replaced.

Consideration should be given to the periodic use of internal or external inspection tools to monitor external and internal pipeline corrosion and to detect other unsafe conditions.

A452 OFFSHORE PLATFORM, PUMP STATION, TERMINAL, AND TANK FARM OPERATION AND MAINTENANCE

A452.5 Fencing

Fencing is not applicable for offshore facilities.

A452.7 Prevention of Accidental Ignition

Smoking shall be prohibited in all areas of offshore facilities in which the possible leakage or presence of vapor constitutes a fire or explosion hazard.

A454 EMERGENCY PLAN

(d) The provisions of para. 454(d) do not apply to offshore pipeline systems.

(e)

(5) The provisions of para. 454(e)(5) do not apply to offshore pipeline systems. To minimize public exposure to injury and to prevent accidental ignition, provisions for halting or diverting marine vessel traffic shall be included in the Emergency Plan.

A460 GENERAL

(a) In addition to the provisions of para. 460(a), special considerations shall be given to corrosion control of offshore pipeline systems because they cannot easily be inspected after installation and there is the possibility of damage to the coating system. Special attention shall be given to the selection, design, and application of corrosion control coatings, the cathodic protection system, and other corrosion design elements.

(c) NACE RP-06-75 provides a guide for procedures to implement requirements herein and to monitor and maintain cathodic protection systems for offshore pipeline systems.

A461 EXTERNAL CORROSION CONTROL FOR OFFSHORE SUBMERGED PIPELINES

A461.1 New Installations

A461.1.1 General

(a) The provisions of para. 461.1.1(a) do not apply to offshore pipeline systems. All submerged steel pipe,

valves, and related fittings shall be externally coated and cathodically protected.

(c) Provisions of para. 461.1.1(c) do not apply to offshore pipeline systems. A minimum clearance of 12 in. (300 mm) shall be maintained between the outside of any offshore pipeline and any other structure that may affect the cathodic protection of the offshore pipeline, except where impractical (e.g., bundled pipelines) and where adequate provisions for corrosion control have been made.

A461.1.2 Protective Coating

(a) In addition to the provisions of para. 461.1.2(a), the coating systems for offshore pipeline systems shall be selected for the type of environment in which the facility is to be installed and shall have the following additional characteristics:

- low water absorption;
- compatibility with system operating temperature;
- compatibility with weight coating application method, if applicable;
- sufficient toughness to withstand damage during installation and operation;
- resistance to future deterioration in a submerged environment;
- ease of repair; and
- resistance to cathodic disbondment.

The coating selected shall be applied in accordance with established specifications and the manufacturer's recommendations.

(f) The provisions of para. 461.1.2(f) do not apply to offshore pipeline systems. If coated pipe is installed by boring, driving, or other similar method, precautions shall be taken to minimize damage to the coating during installation. Consideration should be given to insulating the carrier pipe from the casing pipe when the carrier pipe is pulled into directionally drilled crossings or pull-tube risers. Consideration should also be given to preventing oxygen replenishment in the water in the annulus between carrier pipe and casing by sealing at least one end of pull-tube risers and directionally drilled crossings, or other measures to prevent corrosion.

(g) The provisions of para. 461.1.2(g) do not apply to offshore pipeline systems. In the event that backfilling is required, measures shall be taken to prevent damage to pipeline coating.

A461.1.3 Cathodic Protection System

(a) In addition to the provisions of para. 461.1.3(a), an offshore pipeline is considered to be cathodically protected when it meets one or more of the criteria established in NACE RP-06-75. Where impressed current systems are used, the system shall be designed to minimize outages. The design formula for galvanic anode systems shall include the percentage of exposed pipe, current output of the anodes, design life of the system, anode material, and utilization efficiency. Anodes should be compatible with the operating temperature of the pipeline and the marine environment. Consideration should be given to the effects on cathodic protection of variations in oxygen content, temperature, and water/soil resistivity of the particular offshore environment in which the pipeline is installed.

For installations containing flexible pipe, consideration shall be given to the need for galvanic anodes or impressed current at the end connections.

(b) Provisions of para. 461.1.3(b) do not apply to offshore pipeline systems. A cathodic protection system shall be installed at the time of pipeline installation or as soon as practical after pipeline installation.

(d) Provisions of para. 461.1.3(d) do not apply to offshore pipeline systems. Owners of other offshore pipelines or facilities which may be affected by installation of a cathodic protection system shall be notified of said installation.

A461.1.4 Electrical Isolation

(a) In addition to the provisions of para. 461.1.4, consideration shall be given to electrically isolating supporting devices, such as clamps and pipe supports, from the riser on platforms. Wiring and piping connections to an electrically isolated pipeline shall also be insulated from devices grounded to the platform.

A461.1.5 Test Leads

(a) It is considered impractical to locate test leads on submerged portions of offshore pipeline systems. Consideration should be given to installing test leads on platform risers, platform piping, and pipeline shore crossings.

A461.1.6 Electrical Interference

(c) When new pipeline are laid in the vicinity of existing lines, measures shall be taken to minimize electrical interference.

A461.3 Monitoring

(b) Evidence of adequate level of cathodic protection shall be by one or more of the criteria listed in NACE RP-06-75.

(h) If repairs are made to offshore pipelines below water, inspection for evidence of external corrosion or coating deterioration shall be made, and necessary corrective action shall be taken to maintain the corrosion protection of the pipeline.

When an offshore pipeline is lifted above water for maintenance or repair purpose, the operating company shall visually inspect for evidence of coating deterioration, external corrosion, and where possible, the condition of any exposed anode. If excessive corrosion is present, remedial action shall be taken as necessary.

(i) Consideration should be given to the periodic use of internal inspection tools to monitor external pipeline corrosion.

A463 EXTERNAL CORROSION CONTROL FOR OFFSHORE PIPING SYSTEMS EXPOSED TO ATMOSPHERIC CONDITIONS

A463.1 New Installations

The option of demonstrating "by test, investigation, or experience in area of application that a corrosive atmosphere does not exist," does not apply to offshore pipeline systems. The type of protective coating selected shall be resistant to the environment existing in offshore locations. The surface preparation and coating application shall be performed in accordance with established specifications and the manufacturer's recommendations. The selected coating should have the following characteristics:

- low water absorption,
- resistance to water action,
- compatibility with system operating temperature,
- resistance to atmospheric deterioration,
- resistance to mechanical damage, and
- ease of repair.

The splash zone area of the offshore pipeline system shall be designed with additional protection against corrosion. This shall be accomplished by one or more of the following:

- special coating;
- special protective systems and techniques; and
- other suitable measures, including selection of pipe material.

APPENDIX A
REFERENCED STANDARDS

Specific editions of standards incorporated in this Code by reference, and the names and addresses of the sponsoring organizations, are shown in this Appendix. It is not practical to refer to a specific edition of each standard throughout the Code text; instead, the specific edition reference dates are shown here. Appendix A will be revised at intervals as needed, and issued in Addenda to this Code. An asterisk (*) is used to indicate those standards that have been accepted as American National Standards by the American National Standards Institute (ANSI).

ASTM Specifications

A 6/A 6M-99b
A 20/A 20M-99a
A 29/A 29M-99
A 36/A 36M-00

A 53-99b

A 105/A 105M-98
A 106-99ε1 [Note (1)]
A 126-95ε1
A 134-96
A 135-97c [Note (1)]
A 139-96ε1

A 181/A 181M-95b
A 182/A 182M-99
A 193/A 193M-99a
A 194/A 194M-99

A 216/A 216M-93 (1998)
A 217/A 217M-99
A 225/A 225M-93 (1999)
A 234/A 234M-99
A 242/A 242M-00

A 283/A 283M-00
A 285/A 285M-90ε1 (1996)

A 307-97
A 320/A 320M-99
A 325-97
A 333/A 333M-99
A 350/A 350M-99

A 354-98
A 381-96
A 395-99

A 420/A 420M-99 [Note (4)]

A 449-93

A 487/A 487M-93 (1998)
A 490-97/A 490M-93

ASTM Specifications (Cont'd)

A 505-00
A 506-93 (1998)
A 507-93 (1998)
A 514/A 514M-00
A 515/A 515M-92 (1997)
A 516/A 516M-90ε1 (1996)
A 517/A 517M-93 (1999)
A 524-96 [Note (1)]
A 530/A 530M-99

A 572/A 572M-00
A 573/A 573M-93a (1998)
A 575-96
A 576-90b ε1 (1995)

A 633/A 633M-00

A 663/A 663M-89ε1 (1994)
A 671-96
A 672-96
A 675/A 675M-90a ε1 (1995)
A 694/A 694M-00

NFPA Codes

*30-1996
*70-1999

AWS Standards

*A3.0-1994
*D3.6M-1999

NACE Standards and Other Publications

MR-01-75 (2000 Rev.)
RP-01-69 (1996 Rev.)
RP-01-75
RP-01-77 (1995 Rev.)
RP-06-75
Corrosion Data Survey — Metals Section, 6th Ed., 1985

MSS Standard Practices

SP-6-1996
SP-25-1998
SP-44-1996
SP-55-1996
*SP-58-1993
SP-61-1992
SP-67-1995
SP-69-1996
SP-70-1998
SP-71-1997
SP-75-1998
SP-78-1998

API Standards and Other Publications

RP 2A-WSD, 20th Ed., 1993 & Supp. 1-1996

*Spec. 5B, 14th Ed., 1996
*Spec. 5L, 42nd Ed., 2000 [Note (2)]
*RP 5L1, 5th Ed., 1996
*RP 5LW, 2nd Ed., 1996 (Incorporates 5L1, 5L5, and 5L6)
*Spec. 6A, 18th Ed., 1999
Spec. 6D, 21st Ed., 1994
*Spec. 12B, 14th Ed., 1995
*Spec. 12D, 10th Ed., 1994
*Spec. 12F, 11th Ed., 1994

RP 17B, 2nd Ed., 1998
*RP 500, 2nd Ed., 1997

Std. 600, 10th Ed., 1997

Std. 602, 7th Ed., 1998
*Std. 603, 5th Ed., 1991
*Std. 620, 9th Ed., 1996
Std. 650, 10th Ed., 1998

RP 1102, 6th Ed., 1993
*Std. 1104, 19th Ed., 1999
RP 1109, 2nd Ed., 1993

REFERENCED STANDARDS (CONT'D)

API Standards and Other Publications (Cont'd)	ASME Codes and Standards	ASME Codes and Standards (Cont'd)
RP 1110, 4th Ed., 1997	*ASME Boiler and Pressure Vessel Code, 1998 Ed. and 1999 Addenda	*B16.20-1998 & Addenda 2000
RP 1111, 3rd Ed., 1999		*B16.21-1992
RP 1117, 2nd Ed., 1996		*B16.25-1997
	*B1.1-1998	*B16.28-1994
Publ. 2015, 5th Ed., 1994	*B1.20.1-1983 (R1992)	*B31G-1991
Publ. 2200, 3rd Ed., 1994	*B1.20.3-1976 (R1998)	*B31.5-1992 & Addenda-1994
Publ. 2201, 4th Ed., 1995		*B36.10M-1996
	*B16.5-1996 [Note (3)]	*B36.19M-1985 (R1994)
API Manual of Petroleum Measurement Standards	*B16.9-1993	
	*B16.10-1992	

GENERAL NOTE: The issue date shown immediately following the number of the standard (e.g., A 53-96, B1.1-1998, and SP-6-1996 is the effective date of issue (edition) of the standard.

NOTES:

(1) Approved only if mill hydrostatic test is performed.
(2) Use of bell and spigot line pipe not permitted.
(3) Limited as set forth in para. 402.2.1.
(4) A 420/A 420M Grade WPL9 is not suitable for anhydrous ammonia due to copper content.

Titles of standards and specifications listed above which are referenced in the text but do not appear in Table 423.1 — Material Standards or Table 426.1 — Dimensional Standards are as follows:

API	...	Manual of Petroleum Measurement Standards
API	2A-WSD	Recommended Practice for Planning, Designing, and Constructing Fixed Platforms — Working Stress Design
API	5L1	Recommended Practice for Railroad Transportation of Line Pipe
API	5LW	Recommended Practice for Tansportation of Line Pipe on Barges and Marine Vessels
API	12B	Specification for Bolted Tanks for Storage of Production Liquids
API	12D	Specification for Field Welded Tanks for Storage of Production Liquids
API	12F	Specification for Shop Welded Tanks for Storage of Production Liquids
API	17B	Recommended Practice for Flexible Pipe
API	500	Classification of Locations for Electrical Installations at Petroleum Facilities
API	620	Design and Construction of Large, Welded, Low-Pressure Storage Tanks
API	650	Welded Steel Tanks for Oil Storage
API	1102	Recommended Practice for Liquid Petroleum Pipelines Crossing Railroads and Highways
API	1104	Standard for Welding Pipelines and Related Facilities
API	1109	Recommended Practice for Marking Liquid Petroleum Pipeline Facilities
API	1110	Recommended Practice for Pressure Testing of Liquid Petroleum Pipelines
API	1111	Recommended Practice for Design, Construction, Operation and Maintenance of Offshore Hydrocarbon Pipelines
API	2015	Cleaning Petroleum Storage Tanks
API	2200	Repairing Crude Oil, Liquefied Petroleum Gas, and Product Pipelines
API	2201	Procedures for Welding or Hot Tapping on Equipment in Service
ASME	...	Boiler and Pressure Vessel Code, Section VIII Division 1 Pressure Vessels, Section VIII Division 2 Alternative Rules for Pressure Vessels, and Section IX Welding and Brazing Qualifications
ASME	B31G	Manual for Determining the Remaining Strength of Corroded Pipelines: A Supplement to B31, Code for Pressure Piping
ASME	B31.5	Refrigeration Piping
AWS	A3.0	Welding Terms and Definitions
AWS	D3.6	Specification for Underwater Welding
NACE	...	Corrosion Data Survey — Metals Section
NACE	MR-01-75	Sulfide Stress Cracking Resistant Metallic Materials for Oil Field Equipment
NACE	RP-01-69	Recommended Practice — Control of External Corrosion on Underground or Submerged Metallic Piping Systems
NACE	RP-01-75	Recommended Practice: Control of Internal Corrosion in Steel Pipelines Systems
NACE	RP-01-77	Mitigation of Alternating Current and Lightning Effects on Metallic Structures and Corrosion Control Systems
NACE	RP-06-75	Recommended Practice: Control of Corrosion on Offshore Steel Pipelines

REFERENCED STANDARDS (CONT'D)

NFPA	30	Flammable and Combustible Liquids Code
NFPA	70	National Electrical Code

Specifications and standards of the following organizations appear in Appendix A:

ANSI American National Standards Institute, Inc.
11 West 42nd Street
New York, NY 10036
212 642-4900

API American Petroleum Institute
Order Desk
1220 L Street, N.W.
Washington, DC 20005-4070
202 682-8375

ASME The American Society of Mechanical Engineers
Three Park Avenue
New York, NY 10016-5990
212 591-8500

ASME Order Department
22 Law Drive
Box 2900
Fairfield, NJ 07007-2900
800 843-2763
201 882-1167

ASTM American Society for Testing and Materials
100 Bar Harbor Drive
West Conshohocken, PA 19428-2959
610 832-9500

AWS American Welding Society
P.O. Box 351040
550 N.W. LeJeune Road
Miami, FL 33126
305 443-9353

MSS Manufacturers Standardization Society of the Valve and Fittings Industry, Inc.
127 Park Street, N.E.
Vienna, VA 22180
703 281-6613

NACE National Association of Corrosion Engineers
1440 South Creek Drive
P.O. Box 218340
Houston, TX 77218-8340
713 492-0535

NFPA National Fire Protection Association
1 Batterymarch Park
Quincy, MA 02269-9101
617 770-3000

APPENDIX B
SUBMITTAL OF TECHNICAL INQUIRIES TO THE B31 PRESSURE PIPING COMMITTEE

B-1 INTRODUCTION

The ASME B31 Pressure Piping Committee and its Section Committees meet regularly to consider revisions of the Code rules, new Code rules as dictated by technological development, Code Cases, and Code interpretations. This Appendix provides guidance to Code users for submitting technical inquiries to the Committee. Technical inquiries include requests for revisions or additions to the Code rules, requests for Code Cases, and requests for Code interpretations.

Code Cases may be issued by the Committee when the need is urgent. Code Cases clarify the intent of existing Code requirements or provide alternative requirements. Code Cases are written as a question and a reply and are usually intended to be incorporated into the Code at a later date. Code interpretations provide the meaning of or the intent of existing rules in the Code and are also presented as a question and a reply. Both Code Cases and Code interpretations are published by the Committee.

The Code rules, Code Cases, and Code interpretations established by the Committee are not to be considered as approving, recommending, certifying, or endorsing any proprietary or specific design or as limiting in any way the freedom of manufacturers or constructors to choose any method of design or any form of construction that conforms to the Code rules.

As an alternative to the requirements of this Appendix, members of the Committee and its Section Committees may introduce requests for Code revisions or additions, Code Cases, and Code interpretations at their respective Committee meetings or may submit such requests to the secretary of a Section Committee.

Inquiries that do not comply with the provisions of this Appendix or that do not provide sufficient information for the Committee's full understanding may result in the request being returned to the inquirer with no action.

B-2 INQUIRY FORMAT

Submittals to the Committee shall include:

(a) Purpose. Specify one of the following:

(1) revision of present Code rule(s);

(2) new or additional Code rule(s);

(3) Code Case;

(4) Code interpretation.

(b) Background. Provide the information needed for the Committee's understanding of the inquiry, being sure to include reference to the applicable Code Section, Edition, Addenda, paragraphs, figures, and tables. Preferably, provide a copy of the specific referenced portions of the Code.

(c) Presentations. The inquirer may desire or be asked to attend a meeting of the Committee to make a formal presentation or to answer questions from the Committee members with regard to the inquiry. Attendance at a Committee meeting shall be at the expense of the inquirer. The inquirer's attendance or lack of attendance at a meeting shall not be a basis for acceptance or rejection of the inquiry by the Committee.

B-3 CODE REVISIONS OR ADDITIONS

Requests for Code revisions or additions shall provide the following:

(a) Proposed Revision(s) or Additions(s). For revisions, identify the rules of the Code that require revision and submit a copy of the appropriate rules as they appear in the Code marked up with the proposed revision. For additions, provide the recommended wording referenced to the existing Code rules.

(b) Statement of Need. Provide a brief explanation of the need for the revision(s) or addition(s).

(c) Background Information. Provide background information to support the revision(s) or addition(s) including any data or changes in technology that form the basis for the request that will allow the Committee to adequately evaluate the proposed revision(s) or addition(s). Sketches, tables, figures, and graphs should be submitted as appropriate. When applicable, identify any pertinent paragraph in the Code that would be affected by the revision(s) or addition(s) and paragraphs in the

Code that reference the paragraphs that are to be revised or added.

B-4 CODE CASES

Requests for Code Cases shall provide a statement of need and background information similar to that defined in B-3(b) and B-3(c), respectively, for Code revisions or additions. The proposed Code Case should identify the Code Section and be written as a question and a reply in the same format as existing Code Cases.

B-5 CODE INTERPRETATIONS

Requests for Code interpretations shall provide the following:

(a) Inquiry. Provide a condensed and precise question, omitting superfluous background information, and, when possible, composed in such a way that a "yes" or a "no" reply, possibly with brief provisos, is acceptable. The question should be technically and editorially correct.

(b) Reply. Provide a proposed reply that will clearly and concisely answer the inquiry question. Preferably, the reply should be "yes" or "no" possibly with brief provisos.

(c) Background Information. Provide any background information that will assist the Committee in understanding the proposed inquiry and reply.

B-6 SUBMITTAL AND RESPONSE

Submittals to and responses from the Committee shall meet the following:

(a) Submittal. Inquiries from Code users shall preferably be submitted in typewritten form; however, legible handwritten inquiries will also be considered. They shall include the name, address, telephone number, and fax number, if available, of the inquirer and be mailed to the following address:

Secretary
ASME B31 Committee
Three Park Avenue
New York, NY 10016-5990

(b) Response. The Secretary of the appropriate Section Committee shall acknowledge receipt of each properly prepared inquiry and shall provide a written response to the inquirer upon completion of the requested action by the appropriate Section Committee.

02

INDEX

Abandoning a piping system, 457
Accidental ignition, prevention of, 452.7
Accidental loads, 400.2
Additive circumferential stresses, 402.3.2(e)
Additive longitudinal stresses, 402.3.2(d)
Alcohol, liquid, 435.5
Allowable pipeline repairs, 451.6.2(b)
Allowable stresses and other stress limits, 402.3 (See Stresses)
Allowances, 402.4
corrosion, 402.4.1
threading and grooving, 402.4.2
weld joint factors, 402.4.3
wall thickness, 402.4.5
Ambient influences, 401.4
Ammonia, liquid anhydrous, 422.3, 435.5
Anchors, 421.1
Arc burns, 434.8.7(a), 451.6.2(a)(3)
Assembly of piping components, 435
Attachments to piping, 404.3.4
Auxiliary piping, Part 6, 435.5
design, 422.3

Backfilling, 434.11
Bending properties, unidentified pipe, 437.6.2
Bends, miters, and elbows, 434.7
Bends, pipe, 406.2.1, 434.7.1
design, 406.2(a)
fabrication, 406.2.1(c), 434.7.1
flattening, 434.7.1(b)
mitered bends, 406.2.2, 434.7.2
radius, 406.2.1(b)
wrinkle bends, 406.2.4
Block and isolating valves, 434.15
Blunt imperfection, 400.2
Bolted blind flange closures, 406.6.5
Bolting, 408.5
insulating flanges, 408.5.3
procedure, 408.5.1, 435.2.1
special flanges, 408.5.5
specifications,, 408.5.1
steel flanges, 408.5.2
steel to cast iron flanges, 408.5.4
Branch connections, 404.3.1
integrally reinforced extruded outlet headers, 404.3.1(b), Fig. 404.3.1(b)(3)
definition, 404.3.1(b)(3)
notation, 404.3.1(b)(4)
reinforcement of multiple openings, 404.3.1(e)
reinforcement of single openings, 404.3.1(d)
tees and crosses, 404.3.1(a)
welded, 404.3.1(c)

Breakaway coupling, 400.2
Buckle, 400.2
Bridge attachments, 434.13.3
Building installation, 434.20.3
Butt welds, 411.2

Carbon dioxide, 400.2, 423.2.6, 435.5
Casings under railroads and highways, 434.13.4(b)
Cast iron, 406.3, 407.1(b), 408.5.4
flanges, 408.1.1(c)
limitations, 423.2.4
valves, 423.2.4
Cathodic protection system, 461.1.3
Changes affecting safety, 402.1, 454(a),
Circumferential stresses, additive, 402.3.2(e)
Clearance, pipelines and underground structures, 434.6(c)
Closures, 406.6
Closure fittings, 406.6.2
Closure heads, 406.6.3
Coating, protective, application and inspection, 405.2.1(e), 436.5.2(e), 461.3(c),(d),(e)
Coefficient of thermal expansion, 419.6.1
Cold springing, 400.2
Cold worked steel pipe, special requirements, 402.3.1(d), 405.2.1(d)
Column buckling, 400.2
Combined stress calculations, 402.3.2
Combustible materials, storage of, 452.4
Communications, 451.2
Connections to main lines, 434.16
Connectors, 400.2
Construction, 434
specifications, 434.1
Contraction, thermal, 401.7

Control piping, 452.2
Controls and protective equipment, 452.2

Corrective measures for corrosion control, 464
Corrosion allowance, 402.4.1
Corrosion control, 434.19, 453, 460
pipelines
cathodic protection system, 464(b)(1)
corrective measures, 464
electrical interference, 461.1.6
electrical isolation, 461.1.4
electrical test leads, 461.1.5
external corrosion, 461
internal corrosion, 462
monitoring, 463.3
protective coatings, application and inspection, 461.1.2
pump stations, tank farms, and terminals, 461.1.(b)
Corrosion limits, 451,6.2(a), 451.6.2(a)(7)
Corrosion records, 465
Coupled joints, 418
Couplings, 406.3
Cover, minimum for buried pipelines, Table 434.6(a)
Crosses, design, 404.3.1
Crossings, 434.13
bridge attachments, 434.13.3
highway crossings, 451.9
overhead structures, 434.13.2
railroad crossings, 451.9
river and stream crossings, 434.13.1
safety precautions, 434.3.2(c)
underground structures, 434.13
underwater construction, 434.13.1(a)
Currents, dynamic effects, 401.5.6
Curved segments of pipe, 404.2
elbows, 404.2.2
pipe bends, 404.2.1
Cutting and welding, safe practices in, 434.8.1(c)

Damage to fabricated items and pipe, 434.5
Dead loads, 401.6.2
Defects, 400.2, 451.6.2
removal and repair, 434.8.7
Definitions, 400.2
Derating, operating pressure, 451.7
Design
ambient influences, 401.4
fluid expansion effects, 401.4.2
auxiliary and other specific piping, 422
conditions, 402.1
criteria, 402
dynamic effects, 401.5
expansion and flexibility, 419
external pressure, 401.2.3
internal pressure, 401.2
life, 400.2
loads on pipe supporting elements, 420
pipe supporting elements, 421
pressure design of piping components, 403
curved segments of pipe, 404.2
flanges, 404.5
intersections, 404.3
reducers, 404.6
straight pipe, 404.1, 404.1.2, 404.1.3
other pressure-containing components, 404.7
selection and limitations of piping components, 405
fittings, elbows, bends, and intersections, 406
flanges, facings, gaskets, and bolting, 408
pipe, 405
valves, 407
selection and limitations of piping joints
flanged, 412
sleeve, coupled, and other patented joints, 418
threaded, 414
welded, 411
temperature, 401.3
weight effects, 401.6
Dikes or firewalls, 434.21.5
Dimensional requirements, 426, Table 426.1
Disposal piping, 422.6
Ditching, 434.6
Double submerged arc welded pipe, 400.2
Dynamic effects, 401.5
earthquake, 401.5.3
impact, 401.5.1
subsidence, 401.5.5
vibration, 401.5.4
waves and currents, 401.5.6
wind, 401.5.2

Earthquake, dynamic effect, 401.5.3
Effective stresses, 402.3.2(e)
Elbows
design, 404.2.2
installation, 404.2.2, 434.7.3
Electric flash welded pipe, 400.2
Electric fusion welded pipe, 400.2
Electric induction welded pipe, 400.2
Electric resistance welded pipe, 400.2
Electrical installations, 434.22
Electrical interference, corrosion control, 461.1.6
Electrical isolation, corrosion control, 461.1.4

Electrical test leads for corrosion control, 461.1.5
Emergency plan, 454
Engineering design, 400.2
Expansion,
allowable stresses, 402.3.2(c)
and flexibility, 419, Fig. 419.6.4(c)
coefficient, 419.6.1
fluid effects, 401.4.2
thermal, 401.7
External corrosion control for buried or submerged pipelines, 461
new installations, 461.1
existing piping systems, 461.2
External corrosion control for piping exposed to atmosphere, 463
existing piping systems, 463.2
monitoring, 463.3
new installations, 463.1
External design pressure, 401.2.3
External pressure stresses, 402.3.2(b)
Extruded outlet headers, 404.3(b)(3)(a)

Fabricated closures, 406.6.4
Fabrication (construction), 434
Factory made bends and elbows, 406.2.3, 434.7.3
Fencing, 452.6
Ferrous pipe, 405.2.1
Fillet welds, 400.2
Fire protection, 434.20.7
Firewalls, dikes, or, 434.21.5
Fish tails and flat closures, 406.6.4
Fittings, 406.1
design, 406.1.1(a),(b)
dimensions, Table 426.1
exceeding scope of standard sizes, 406.1.1 (c)
flexibility and stress intensification factors, 419.1(b)
installation, 406.1.1
materials, Table 423.1
selection and limitations, 406.1.1
Flanged joints, selection and limitations, 412
Flanges 408.1
attachment, welding details for, Fig. 434.8.6 (b)
bolting, 408.5
bolting specifications, 408.5.1
cast iron, 408.1.1(c)
exceeding scope of standard sizes, 408.1.1(d)
facings, 408.3
pressure design, 404.5
rectangular cross section, 408.1.1(e)
selection and limitations, 404.5.1, 408.1.1
Flattening, pipe bends, 434.7.1(b)
Flexibility, 419.5
properties, 419.6
Flexibility, expansion and, 419, Fig. 419.6.4(c)
Flexibility factors, 419.5.1
Fluid expansion effect, 401.4.2
Fracture propagation in carbon dioxide pipelines, 402.5
brittle fractures, 402.5.2
design considerations, 402.5.1
ductile fractures, 402.5.3
Full fillet weld, 400.2
Furnace butt welded pipe, 400.2
Furnace lap welded pipe, 400.2

Gas welding, 400.2
Gas metal arc welding, 400.2
Gas tungsten arc welding, 400.2
Gaskets, selection and limitations, 408.4
Gas pockets, welds, 434.8.5(b)
General corrosion, 400.2, 451.6.2(a)(6)
Girth welds, 400.2,
Gouges in pipe, 451.6.2(b), 434.5(b)(1)
Grooves in pipe, 451.6.2(b)
Groove type, butt welds, 411.2
Grooving allowance, 402.4.2

Handling, hauling, stringing, and storing, 434.4
Hangers and supports, 421
Headers, extruded outlet, 404.3(b)(3)(a)
Highway crossings, 434.13.4, 451.9
Holder (storage), pipe, 434.21.3(d)
Hot taps, 451.6.1(a)
Hydrostatic test, 437.4.1

Ignition, prevention of accidental, 452.7
Impact, dynamic effect, 401.5.1
Imperfections, limits and disposition, 400.2, 451.6.2 (a)
Inland coastal water construction, 434.14
Inland waters platform risers, 451.10
Inquiries, App.B
Inspection, 436
during construction, 434.2, 436.5.1(b)
operation and maintenance
pipelines, 436.5
pump stations, terminals, and tank farms, 452
welding, 434.8.5(a)
supplementary types of examination, 436.5.2

type and extent of examination required, 436.5
Inspector qualification, 436.1
Installation
connections to main lines,, 434.16
electrical facilities, 434.22.3, 461.1.3
electrical test leads, 461.1.5
instrument and other auxiliary piping, 422.3
line markers, 434.18, 451.3
liquid metering facilities, 434.24
liquid strainers and filters, 434.24
manifolds, 435.4
pipe in the ditch, 434.10
protective coatings, 461.1.2
pumping unit piping, 435.3
pump station, tank farm, and terminal facilities, 434.20
scraper traps, 434.17
special crossings, 434.13
storage and working tankage, 434.21
valves, 407
Instruments and other auxiliary piping, 422.3
Intensification factors, Fig.419.6.4(c)
Internal corrosion control, 462
existing piping systems, 462.2
monitoring, 462.3
new installations, 462.1
Internal design pressure, 400.2
Internal pressure design equation for pipe, 401.2, 404.1.2
Internal pressure stresses, 402.3.2(a)
Interpass temperature for welding, 434.8.8
Intersections, 404.3, 406.5
design 404.3
selection and limitations, 406
Iron, cast, malleable, and wrought, 423.2.4

Joint factor E for weld seam of pipe, 402.4.3, Table 402.4.3
Joint selection and limitations
flanged joints, 412
sleeve, coupled, and other patented joints, 418
threaded joints, 414
welded joints, 411

Lapped flanges, 408.1.1(b)
Leak records, 455(d)
Leak repairs, 451.6.2(b)
Leak tests for pipelines to operate at 20% or less of SMYS, 437.4.3
Limitations
fittings, elbows, bends, and intersections, 406.1.1
flanges, facings, gaskets, and bolting, 404.5
materials, 423.2
pipe, 405.2.1
valves, 407.1
Limits of imperfections, 451.6.2
Line markers, 434.18, 451.3
Liquefied petroleum gas(es) (LPG), 400.2, 422.3
Liquid alcohol, 400.2
Liquid anhydrous ammonia, 400.2, 422.3, 423.2.5
Liquid metering, 434.23
Liquid strainers and filters, 434.24
Liquid Transportation Systems Code, 400(a),(b),(c),(d),(e),(f),(g)
scope, 400.1, 400.1.2, Fig. 400.1.1, Fig. 400.1.2
Loads
currents, dynamic effects, 401.5.6
dead, 401.6.2
external, 434.13.4(c), 451.9(a)
live, 401.6.1
occasional, 402.3.3
pipe supporting elements, 420
sustained and thermal expansion, 401.7
waves, dynamic effects, 401.5.6
wind, 401.5.2
Localized corrosion pitting, 451.6.2(a)(7)
Location of
pump stations, 434.20.2
right of way, 434.3.1
storage and working tankage, 434.21.2
valves, 434.15
Longitudinal stresses, additive 402.3.2(d)
Longitudinal weld seam joint factor E for pipe, 402.4.3, Table 402.4.3

Mainline valves, 434.15.2
Maintenance, 450
pipeline, 451
plans and procedures, 450.2
pump stations, terminals, and tank farms, 452
relief valves, pressure limiting devices, etc., 452.2.5
valves, 451.8
Malleable iron, 423.2.4
Manifolds, 435.4
Markers, line, 434.18, 451.6.2
Materials, 423
limitations, 423.2
cast, malleable and wrought iron, 423.2.4
carbon dioxide piping system, 423.2.6
liquid anhydrous ammonia pipeline systems, 423.2.5

steel, Table 423.1
qualifications of, 423.1
specifications, Table 423.1
Maximum steady state operating pressure, 400.2
Metallic pipe, 405.2
Meters, 434.23
Miter, 400.2
Mitered bends, 406.2.2
Moduli of elasticity, 419.6.2
Monitoring, corrosion control, 461.3, 462.3, 463.3
Monitoring flow, 452.1(b)
Multiple openings, reinforcement, 404.3.1(b)(7), 404.3.1(e)(1)

Nominal pipe size (NPS), 400.2
Nominal wall thickness, 404.1.1
Normal operating conditions, 402.2.3
Normal operation, variations from, 402.2.4

Offshore
allowable stresses and other stress limits, A402.3, A402.3.5(a)
allowances, A402.4
backfilling, A434.8.9
bends, pipe
bends, miters and elbows, A406.2, A434.7
made from pipe, A434.7.1
bottom soils, A401.9.4, A401.10.4, A401.11.4
branch connections, A404.3.1
cathodic protection system, A461.1.3
closures, A406.6
fabricated, A406.6
construction A434
inspection, A434.2
corrosion control
external corrosion control, A461
new installations, A461.1
offshore piping systems exposed to atmospheric conditions, A463
offshore submerged pipelines, A461
general, A461.1.1
internal corrosion control, A451.11
definitions, A400.2
derating a pipeline to a lower operating pressure, A451.7
design and protection of special assemblies, A402.3.10
design
conditions, A401
general, A401.1
criteria, A402
expansion and flexibility, A402.3.6
clamps and supports, A402.3.7
connectors and flanges, A402.3.8
factors for offshore pipeline systems, Table A402.3.5(a)
flexible pipe, A402.3.11
load classifications
hydrostatic test, A401.11.2
installation, A401.9.2
operational, A401.10.2
other design considerations, A410
pressure components, A404
pipe supporting elements, A421
pipeline crossings, A402.3.12
special assemblies, A402.3.10
structural riser protectors, A402.3.9
disposition of defects, A451.6.2
ditching, A434.6
electrical interference, A461.1.6
electrical isolation, A461.1.4
emergency plan, A454
environmental loads,
during hydrostatic test, A401.11.3
during installation, A401.9.3
during operation, A401.10.3
expansion and flexibility, A419
fencing, A452.5
fittings, elbows, bends, and intersections, A406
flanges, facings, gaskets, and bolting, A408
flanges, A408.1
facings, A408.3
flexible pipe, A400.2, A402.3.4(h), A405.3
repair, A451.6.4
general statements, A460
handling, hauling, stringing, and storing, A434.4
hydrostatic test design considerations, A401.11, A401.11.1
hydrostatic test loads, A401.11.2
inspection, A436, A451.11
offshore pipeline risers, A436.5.1(a)(11), A451.11
type and extent of examination, A436.5
visual, A436.5.1
installation design considerations, A401.9
loads, A401.9.1, A401.9.2
procedures and equipment selection, A434.14.2
intersections, A404.3
leak testing, A437.4.3
limitations on materials, A423.2
line markers, A434.18
markers, A451.3
materials, A423
acceptable materials and specifications, A423.1

mitered elbows, A406.2.2
monitoring, A461.3
movement of existing pipelines, A434.14.3
offshore
design conditions, A401.1.1
pipeline construction, A434.14
pipeline risers, A451.10
platform, pump station, terminal and tank farm operation
and maintenance, A452
operational design considerations, A401.10
loads, A401.10.1, A401.10.2
orange peel swages, A406.4.2
patrolling, A451.5
pigs and internal inspection tools, A410.1
pipe, A405
ferrous pipe, A405.2.1
flexible, A405.3
general, A404.1.1
metallic pipe, A405.2
steel, A405.2.1
pipe depth and alignment, A434.14.1
pipeline operation and maintenance, A451
plans and procedures, A450.2
procedures affecting the safety of liquid transportation piping systems,A450
pipeline repairs, A451.6
general, A451.6.1
pressure design of components, A404
straight pipe, A404.1
prevention of accidental ignition, A452.7
protective coating, A461.1.2
qualification
of inspectors, A436.2
tests, A437.6
railroads and highways crossing existing pipelines, A451.9
records, A437.7
reductions, A406.4
repair of flexible pipe, A451.6.4
right of way maintenance, A434.3, A451.4
route selection considerations, A401.12
scope, A400.1
special components, A410.2
special crossings, A434.13
strength criteria
during installation and testing, A402.3.4
during operations, A402.3.5
stress relieving, A434.8.9
survey and staking or marking, A434.3.3
test leads, A461.1.5
testing, A437
general, A437.1.4
pressure, A437.4
testing after new construction, A437.1.4
threaded joints, A414
general, A414.1
used piping components and equipment, A409
valves, A407
block and isolating valves, A434.15
general, A434.15.1
maintenance, A451.6
water crossing, A434.13.1
welding, A434.8
weld joint factors, A402.4.3
welding qualifications, A434.8.3
welding quality, A434.8.5
Operating company, 400.2
Operating pressure, 451.1, 456
Operation and maintenance, 450
pipeline, 451
plans and procedures, 450.2
procedures affecting safety, 450.2(d)
pump station, terminal, and tank farm, 452
qualifying for a higher operating pressure, 451.1, 456
records, 465
Orange peel bull plugs, 406.6.4
Orange peel swages, 406.4.2
Organizations, standards and specifications of, App.A
Overhead structures, 434.13.2
Overpressuring, protection against, 402.2.4

Patrolling, 451.5
Petroleum, 400.2
liquid, 435.5
Pipe, 400.2
Pipe, steel, 405
bends, 404.2.1
buckles, 400.2
coated or lined, 405.2.1(e)
cold worked steel, special limitations, Table 402.3.1(a)
damage to, 434.5
defects, 434.8.7(c)
dents, 434.5, 436.5.1(a)(2), 451.6.2(a)(2)
design, 422, 403, 405
expansion and flexibility, 419, Fig.419.6.4(c)
flattening, test for, 437.6.2
gouges and grooves, 451.6.2
handling, hauling, stringing, and storing, 434.4
hangers, 421
holder for storage, 434.21.3(d)

inspection, 436
installation of, in the ditch, 434.10
installation of, special crossings, 434.13
joint factor E for weld seam, 402.4.3, Table 402.4.3
limitations of design values, 405.2.1
protection from unusual external conditions, 402.1
protective coatings, 405.2.1(e), 436.5.2(e), 461.3(c),(d),(e)
qualification of specification ASTM A 120,
reuse of, 405.2.1(b),(c)
selection and limitations, 405
specifications, list of, Table 423.1, Table 426.1
specified minimum yield strength, Table 402.3.1(a)
supporting elements, loads and design, 400.2, 421
surface requirements, 434.5(b)
testing, 437
threads, 426.3
unidentified or used, limitations, 409
unidentified, S value, 402.3.1(c)
used, S value, 402.3.11(b)
welding, 400
Pipeline repairs, 451.6, 451.6.2(b), 451.6.2(c)
Pipelines on bridges, 434.13.3
Pipe-type holders (storage), 434.21.3
Piping
abandoning of, 457
anchorage , 421.1
buried, for, 419.1(b),(c)
exposed, for, 419.1(d)
attachments, 404.3.4
control, instrument, and other auxiliary, 422.3
existing systems, 461.2
hangers, 421
nonstandard components, 426.2
pressure and temperature ratings for piping components, 402.2
pressure disposal, 422.6
standard components, 426.1
supports for, 400.2
testing, 437
threads, 426.3
welding, 400.2
Pitting, localized corrosion, evaluation of, 451.6.2(a)(7)
Plan, emergency, 454
Plans and procedures, operation and maintenance, 450.2
Platform risers, 451.10
Plugs, orange peel bull, 406.6.4
Pneumatic, testing, 437.4.3
Poisson's ratio, 419.6.3
Preheating, and interpass temperature for welding, 434.8.8
Pressure, 400.2
derating, 451.7,
design, 403, 404
disposal piping, 422.6
limiting devices
capacity of, 402.2.4
installation, 434.20.6
testing, 437.1.4(c)
maximum steady state operating, 401.2.2, 451.1, 456
qualifying for higher operating, 456, 451.1(b)
ratings, 402.2
testing, 451.6.3, 456(b)
Prevention of accidental ignition, 452.7
Procedures, operation and maintenance, 450.2
Procedures, pipe bending, 434.7.1
Procedures and welders, qualifications of, 434.8.3
Proof tests, 404.7(a)
Proprietary items, 400.1
limitations, 423.2.1
Protection of pipelines against unusual external conditions, 402.1
Protective coatings, 405.2.1(e), 436.5.2(e), 461.3(c),(d),(e)
Protective equipment, controls and, 452.2
Pump stations, tank farms, and terminals, 434.20
building installation, 434.20.3
controls and protective equipment, 434.20.6, 452.2
corrosion control, 461.1.1(b)
electrical facilities, 434.22
fenced areas, 452.5
fire protection, 434.20.7
location, 434.20.2
operation and maintenance, 452
piping, 434.20.5
pressure disposal piping, 422.6
pumping equipment and prime movers, 434.20.4
safety devices, 434.20.6
testing, 456(b)
valves, 434.15.3
Pumping unit piping, 435.3

Qualification
inspectors, 436.1
materials, 423.1
procedures and welders, 434.8.3
records, welding, 434.8.3(g)
tests, 437.6
Qualifying system for higher pressure, 456, 451.1(b)
Quick opening closures, 406.6.1

Radiograph examination
crossings, 434.8.5
field welds, 436.5.2(b)
procedures, 434.8.5
reducers, 404.6(b)
tie-ins, 434.8.5, 437.1.4(b)
Radius, pipe bends, 404.2.1
Railroad crossings, 434.13.4, 451.9
Railroad transportation of pipe, 434.4
Ratings, pressure-temperature for piping components, 402.2
allowance for variations from normal operations, 402.2.4
components not having specific ratings, 402.2.2
considerations for different pressure conditions, 402.2.5
normal operating conditions, 402.2.3
Records, 455
corrosion of pipelines, 465, 455(b)
design, construction, and testing, 437.7
inspections, 455(e)
pipeline leaks, 455(d)
pipeline patrol, 455(b))
qualifying system for higher pressure, 456, 451.1(b)
welders qualification tests, 434.8.3(d)
welding procedures, 400.2
Reducers, 404.6, 406.4.1
design, 404.6(b)
selection and limitations, 404.6(a)
Reductions, 406.4
Reference standards, App.A
Reinforcement
extruded outlets, 404.3.1(b)(7)
welded branch connections, 404.3.1(c)
welding details, Fig. 404.3.1(c)(1)
Relative movement of connected components, 401.8
Relief valves, 437.1.4(c), 452.2 (b),
Removal or repair of defects or imperfections, 434.8.7
arc burns, 434.8.7(a)
welds, 434.8.7(b)
other, 434.8.7(c)
Repair of defects, 436.6, 451.6.2
Repairs, pipeline, 451.6
Repairs, testing, 451.6.3
Responsibility for qualification of procedures and welders,
Reuse of steel pipe, 405.2.1(b),(c)
Right of way, 434.3, 451.4
construction requirements, 434.3.2
restoration and cleanup, 434.12
surveying, 434.3.3
Risers, platform, 451.10
Road and highway crossings, 434.13

Safety devices
installation, 434.20.6
maintenance, 452.2
testing, 437.1.4(c), 452.2
Scraper traps, 434.17
Seamless pipe, 400.2
Semiautomatic arc welding, 400.2
Shall, 400.2
Shielded metal arc welding, 400.2
Should, 400.2
Signs, 452.6
Smoking, 452.7(a)
Soil liquefaction, 400.2
Spacing of valves, 434.15.2
Span, 400.2
Special crossings, 434.13
Specification ASTM A 120 pipe, qualification, 405.2.1(c)
Specifications,
electrical installations, 434.22, 461.3(a),(d)
list of, App.A
material, 423.1
pipeline construction, 434.1
pump station construction, 434.20
storage and working tankage, 434.21
Specified minimum yield strength, 402.3.1(a)
Spiral weld seam joint factor E for pipe, 402.4.3
Standards, dimensional, 426, Table 426.1
Standards and specifications, Table 423.1, Table 426.1, App. A
Standards of acceptability of welds, 434.8.4
Steel butt welding fittings, 406.1.1(a)
Steel flanged fittings, 406.1.1(b)
Steel flanges within scope of standard sizes, 408.1.1(b)
Storage and working tankage, 434.21
Storage of combustible materials, 452.4
Storage vessels, 452.3
Stress
analysis (flexibility) 419.7, Fig. 419.6.4(c)
calculations, combined, 419.6.4
intensification factors, Fig.419.6.4(c)
limits,
occasional loads, 402.3.3
sustained loads and thermal expansion, 402.3.2
relieving, 434.8.9
Stresses, allowable, 402.3, Table 402.3.1(a)
values, 402.3.1, 419.6.4
restrained lines, 419.6.4(b)
unrestrained lines, 419.6.4(c)

limits, 402.3.2, 402.3.3
Submerged arc welding, 400.2
Subsidence, dynamic effect, 401.5.5
Supports, braces and anchors, 421.1
Surface defects, 434.5, 436.5.1
Surveying and staking or marking, 434.3.3
Swages, orange peel, 406.4.2

Tack weld, 400.2
Tankage, 434.21.2
Tank farms, pump stations, and terminals, 434.20
dikes or firewalls, 434.21.5
foundations, 434.21.4
operation and maintenance, 452
Tanks and pipe-type storage, 434.21.3
Taps, hot, 451.6.1(a)
Tees
design, 404.3.1(a)
selection and limitations, 406.5
Temperature, 400.2
ratings, 402.2
Terminals, pump stations, tank farms, 434.20
operation and maintenance, 452
Testing, 437
after construction, 437.1.4
fabricated items, 437.1.3
leak, 437.4.3
pressure limiting devices, 402.2.4
qualifying for higher operating pressure, 456, 451.1(b)
records, 465
repairs, 451.6.3
systems or parts of systems, 437.1.4(a)
tie-ins, 434.5(a)(3)(e), 437.1.4(c), 451.6.3
unidentified or used steel pipe, 437.6
welding, 434.8.3(b)
Test leads, corrosion control, 461.1.5
Test pressure, 437.4
Test requirements, 437, 451.6.3, 456(b)
Tests
corrosion control, 461.1.5
leak, for pipelines to operate at 20% or less of SMYS, 437.4.3
qualification, unidentified or used steel pipe, 437.6
welding, 434.8.3(b)
Thermal expansion, 401.7
coefficient of, 419.6.1
Thickness, steel pipe
design, 404.1
determination, unidentified or used, 437.6.3
Threads, 426.3
Threading and grooving, 402.4.2
Tie-ins, 434.9, 434.5(a)(3)(e), 437.1.4(c), 451.6.3
Tolerances, wall thickness and defect, 402.4.5
Transition nipples, 434.8.6

Unidentified or used steel pipe
limitations, 409
qualification tests, 437.6
bending properties, 437.6.2
minimum yield strength value, 437.6.7
visual examination, 437.6.1
wall thickness, 437.6.3
weldability, 437.6.5
weld seam joint factor E, 437.6.4
yield strength determination, 437.6.6

Valves, 407
block and isolating valves, 434.15
dimensional requirements, 426
installation and location, 434.15
maintenance
pipeline, 451.8
relief valves, etc., 452.2
materials, 407.1
selection and limitations, 407.1
spacing, 434.15.2
special, 407.8
specifications and standards, Table 423.1, Table 426.1
testing relief valves, etc., 437.1.4(c), 452.2

Vibration, dynamic effect, 401.5.4
Visual examination, 436.5.1, 437.6.1

Wall thickness, steel pipe
allowances and tolerances, 437.6.3
determination, 437.6.3
least nominal, 437.6.3
unidentified or used steel pipe, 437.6.3
Water crossings, 434.13.1
Waves, dynamic effects, 401.5.6
Weight coating, 400.2
Weight effects, 401.6
dead loads, 401.6.2
live loads, 401.6.1
Weldability, unidentified or used steel pipe, 437.6.5
Welded branch connections, 404.3.1(c), Table 404.3.1(c)
Welders, 400.2

qualification of, 434.8.3(a)
requalification requirements, 434.8.3(e),(g)
Welding
arc, 400.2
arc burns, 434.8.7
automatic, 400.2
details for openings
with encirclement, Fig. 404.3.1(c)(1)
with localized reinforcement, Fig. 404.3.1(c)(2)
without reinforcement, Fig. 404.3.1(c)(3)
end treatment, acceptable
equal thickness, Fig. 434.8.6(a)(1)
unequal thickness, Fig. 434.8.6(a)(2)
filler metal, 434.8.2
gas, 400.2
gas metal arc, 400.2
gas tungsten arc welding, 400.2
general, 434.8.1
inspection and tests, 434.8.5
maintenance, 451.6
preheating and interpass temperature for, 434.8.8
procedure, 400.2
processes, 434.8.2
qualification of procedures and welders, 434.8.3
qualification records, 434.8.3(e),(g)
responsibility for qualification, 434.8.3(f)
safe practices in cutting and welding, 434.8.1(c), 451.6.1,
semiautomatic arc welding, 400.2
shielded metal arc welding, 400.2
submerged arc welding, 400.2
standards of acceptability, 434.8.4
stress relieving, 434.8.9
terms, 434.8.1(b)
tests, 434.8.3(b)
variables, 434.8.3(d)
Welding operator, 400.2
Weld joint factor, 437.6.4, Table 402.4.3
Welds, 400.2
burn-through areas, 434.8.5(b)
butt, 434.8.6(a)
defects, 434.8.7(b)
cracks in, 434.8.5(b)
discontinuities in, 434.8.5(b)
fillet, 400.2, 434.8.6(b)
full fillet, 400.2
gas pockets, 434.8.5(b)
inadequate penetration and incomplete fusion, 434.8.5(b)
porosity, 434.8.5(b)
removal or repair of defects, 434.8.7
slag inclusions, 434.8.5(b)
tack, 400.2, 434.8.6(c)
types of, 434.8.6
undercutting, 434.8.5(b)
Wind, dynamic effect, 401.5.2
Wrinkle bends, 406.2.4

Yield strength, 437.6.6
specified minimum, steel pipe, Table 402.3.1(a)
unidentified or used steel pipe, 437.6.7

ASME B31.4

INTERPRETATIONS NO. 7

Replies to Technical Inquiries
January 1, 2001 Through December 31, 2001

It has been agreed to publish intepretations issued by the B31 Committee concerning B31.4 as part of the update service to the Code. The interpretations have been asssigned numbers in chronological order. Each interpretation applies either to the latest Edition or Addenda at the time of issuance of the interpretation or the Edition or Addenda stated in the reply. Subsequent revisions to the Code may have superseded the reply.

These replies are taken verbatim from the original letters, except for a few typographical and editorial corrections made for the purpose of improved clarity. In some instances, a review of the interpretation revealed a need for corrections of a technical nature. In these cases, a revised reply bearing the original interpretation number with the suffix R is presented. In the case where an interpretation is corrected by Errata, the original interpretation number with the suffix E is used.

ASME procedures provide for reconsideration of these interpretations when or if additional information is available which the inquirer believes might affect the interpretation. Further, persons aggrieved by an interpretation may appeal to the cognizant ASME committee or subcommittee. As stated in the Statement of Policy in the Code documents, ASME does not "approve," "certify," "rate," or "endorse" any item, construction, proprietary device, or activity.

For detailed instructions on preparations of technical inquiries to the B31 Committee, refer to Appendix B.

Interpretations No. 1 was included with ANSI/ASME B31.4c-1986. Interpretations No. 2 was included with ASME B31.4a-1987. Interpretations No. 3 was included with ASME B31.4a-1991. Interpretations No. 4 was included with ASME B31.4a-1994. Interpretations No. 5 was included with ASME B31.4-1998. Interpretations No. 6 was included with B31.4a-2001.

Interpretations No. 7 contains interpretations inadvertently omitted from Interpretations No. 6.

B31.4

Subject	Interpretation	File No.
434.7.1, Bends, Miters, and Elbows, and 437.4.1, Hydrostatic Testing of Internal Pressure Piping	4-73	B31-01-006
401.2.2, Internal Design Pressure	4-74	B31-01-007
409, Used Piping Components and Equipment	4-75	B31-01-008

Interpretation: 4-73

Subject: ASME B31.4-1998 Edition, Paras. 434.7.1 and 437.4.1

Date Issued: March 22, 2001

File: B31-01-006

Question: If a section of pipe meets the following requirements: pretested for use as a replacement pipe in accordance with section 437.4.1 of B31.4; then cold bent in accordance with section 434.7.1 of B31.4; and complies with the quality requirements of section 434.7.1 of B31.4; does the pipe bend need to be retested in accordance with section 437.4.1 of B31.4 after completion of the bend?

Reply: No.

Interpretation: 4-74

Subject: ASME B31.4-1998 Edition, Para. 401.2.2, Internal Design Pressure

Date Issued: March 23, 2001

File: B31-01-007

Question: May a piece of pipe that has been subjected to a hydrostatic test by a manufacturer to a pressure level less than or equal to 1.25 times its design pressure as per paragraph 401.2.2 for a period of less than 4 hr be subjected to a hydrostatic test in the field to a pressure level of 1.25 times its design pressure for a period of 4 hr or more?

Reply: Yes.

Interpretation: 4-75

Subject: ASME B31.4-1998 Edition, Para. 409, Used Piping Components and Equipment

Date Issued: March 22, 2001

File: B31-01-008

Question: May B31.4 be interpreted to consider an existing pipeline built per B31.8 as "used" in accordance with para. 405.2.1(b) or (c) and para. 409 of B31.4 and then operated at an operating pressure established in accordance with paragraph 451.1 of B31.4?

Reply: Yes.

ASME CODE FOR PRESSURE PIPING, B31

B31.1	Power Piping	2001
B31.2[1]	Fuel Gas Piping	1968
B31.3	Process Piping	2002
B31.4	Pipeline Transportation Systems for Liquid Hydrocarbons and Other Liquids	2002
B31.5	Refrigeration Piping and Heat Transfer Components	2001
B31.8	Gas Transmission and Distribution Piping Systems	1999
B31.9	Building Services Piping	1996
B31.11	Slurry Transportation Piping Systems	1989 (R1998)
B31G-1991	Manual for Determining the Remaining Strength of Corroded Pipelines: A Supplement to ASME B31 Code for Pressure Piping	

NOTE:

(1) USAS B31.2-1968 was withdrawn as an American National Standard on February 18, 1988. ASME will continue to make available USAS B31.2-1968 as a historical document for a period of time.

ASME Code for Pressure Piping, B31
An American National Standard

ASME B31G-1991
(REVISION OF ANSI/ASME B31G-1984)

Manual for Determining the Remaining Strength of Corroded Pipelines

A Supplement to ASME B31 Code for Pressure Piping

The American Society of Mechanical Engineers

AN AMERICAN NATIONAL STANDARD

ASME CODE FOR PRESSURE PIPING, B31

Manual for Determining the Remaining Strength of Corroded Pipelines

A Supplement to ASME B31 Code for Pressure Piping

ASME B31G-1991

(REVISION OF ANSI/ASME B31G-1984)

The American Society of Mechanical Engineers

345 East 47th Street, New York, N.Y. 10017

Date of Issuance: June 27, 1991

The 1991 edition of this Manual will be revised when public comment or Committee actions necessitate the issuance of a new edition, or it will be reviewed and reaffirmed 5 years from the date of approval of this edition. No addenda service is provided with this publication. Written interpretations of the requirements of this Manual will not be issued to the current edition.

ASME is the registered trademark of The American Society of Mechanical Engineers.

This code or standard was developed under procedures accredited as meeting the criteria for American National Standards. The Consensus Committee that approved the code or standard was balanced to assure that individuals from competent and concerned interests have had an opportunity to participate. The proposed code or standard was made available for public review and comment which provides an opportunity for additional public input from industry, academia, regulatory agencies, and the public-at-large.

ASME does not "approve," "rate," or "endorse" any item, construction, proprietary device, or activity.

ASME does not take any position with respect to the validity of any patent rights asserted in connection with any items mentioned in this document, and does not undertake to insure anyone utilizing a standard against liability for infringement of any applicable Letters Patent, nor assume any such liability. Users of a code or standard are expressly advised that determination of the validity of any such patent rights, and the risk of infringement of such rights, is entirely their own responsibility.

Participation by federal agency representative(s) or person(s) affiliated with industry is not to be interpreted as government or industry endorsement of this code or standard.

ASME accepts responsibility for only those interpretations issued in accordance with governing ASME procedures and policies which preclude the issuance of interpretations by individual volunteers.

No part of this document may be reproduced in any form,
in an electronic retrieval system or otherwise,
without the prior written permission of the publisher.

Copyright © 1991 by
THE AMERICAN SOCIETY OF MECHANICAL ENGINEERS
All Rights Reserved
Printed in the U.S.A.

FOREWORD

(This Foreword is not a part of ASME B31G-1991.)

It is recognized by pipeline companies that some sections of high pressure pipelines, particularly those installed a number of years ago, have experienced some corrosion. Where corrosion is found, pipeline operators have been deeply concerned about the need for a method of determining the remaining strength of these corroded areas. If the corrosion does not penetrate the pipe wall, what is the pressure containing capability of the remaining pipe metal in terms of its ability to continue to operate safely at the maximum allowable operating pressure (MAOP) of the pipeline system? Thus, one of the needs of the pipeline industry has been a procedure that will help operators, particularly field personnel, make decisions on existing pipelines, when exposed for any purpose, as to whether any corroded region may be left in service or whether it needs to be repaired or replaced. Such determinations must be based upon sound research and extensive testing in order to provide safe and conservative guidelines on which to base field decisions. The Manual provides procedures to assist in this determination.

Parts 2, 3, and 4 are based on Appendices G-6, G-7, and G-8 of the ASME Guide for Gas Transmission and Distribution Piping Systems, 1983 Edition. They are included in this Manual for use by field operators to determine the remaining strength of corroded pipe. The technology is based on research done in the Columbus laboratories of the Battelle Memorial Institute; specifically, their report *Summary of Research to Determine the Strength of Corroded Areas in Line Pipe*, July 10, 1971.

A revision to the 1984 edition of the Manual was undertaken in 1989. The revision includes a number of clarifications and corrections. The computer program presented in Appendix B and used to produce a printed table of maximum acceptable corrosion lengths for a given pipe diameter, and up to ten wall thicknesses of that diameter, was upgraded.

This Manual was approved by ASME and subsequently by the American National Standards Institute on May 20, 1991.

ASME CODE FOR PRESSURE PIPING, B31

OFFICERS

R. E. Feigel, *Chairman*
L. E. Hayden, Jr., *Vice Chairman*
C. J. Gomez, *Secretary*

COMMITTEE PERSONNEL

P. A. Bourquin, Wolff & Munier International, Hawthorne, New York
A. J. Breugelmans, Lyndhurst, New Jersey
J. D. Byers, Mobil Research & Development, Princeton, New Jersey
J. J. Chappell, Anchor/Darling Valve Co., Williamsport, Pennsylvania
L. F. Clynch, CONOCO Mid-Continental Division, Ponca City, Oklahoma
P. C. DuPernell, Lancaster, New York
R. E. Feigel, Hartford Steam Boiler Inspection and Insurance Co., Hartford, Connecticut
D. M. Fischer, Sargent & Lundy, Chicago, Illinois
P. D. Flenner, Consumers Power Co., Jackson, Michigan
P. H. Gardner, Hercules Inc., Wilmington, Delaware
R. W. Haupt, Pressure Piping Engrg Associates Inc., Foster City, California
L. E. Hayden, Jr., Victaulic Company of America, Easton, Pennsylvania
R. R. Hoffmann, Federal Energy Regulatory Commission, Washington, DC
B. P. Holbrook, Riley Stoker Corp., Worchester, Massachusetts
H. M. Howarth, Trenton, New Jersey
W. B. McGehee, Spring, Texas
A. J. Shoup, Sr., Houston, Texas
G. W. Spohn, III, Dixie Constructors, Inc., Gaffney, South Carolina
H. A. Sosnin, Jenkintown, Pennsylvania
D. H. Wade, Texas Utilities Electric Co., Dallas, Texas

B31.8 GAS TRANSMISSION AND DISTRIBUTION PIPING SYSTEMS SECTION COMMITTEE

A. J. Shoup, Sr., *Chairman*, Houston, Texas
W. B. McGehee, *Vice Chairman*, Spring, Texas
C. J. Gomez, *Secretary*, ASME, New York, New York
W. C. Alexander, Shreveport, Louisiana
R. J. T. Appleby, Exxon Co., USA Thousand Oaks, California
J. E. Beech, Texas Gas Transmission Corp., Owensboro, Kentucky
C. Boshuizen, T. D. Williamson Inc., Tulsa, Oklahoma
L. E. Brooks, Delta Gulf Corp., Shreveport, Louisiana
F. E. Buck, Grove Valve & Regulator Co., Oakland, California
J. S. Chin, ANR Pipeline Co., Detroit, Michigan
W. L. Clayton, Entex Inc., Houston, Texas
P. J. Cory, Bowie, Maryland

R. L. Dean, ConReg Associates, Bellaire, Texas
A. J. Del Buono, CMI-Princeton Inc., Princeton, Kentucky
P. W. Denning, Texas Gas Transmission Corp., Owensboro, Kentucky
M. J. Epperson, Texaco Inc., Bellaire, Texas
J. J. Fallon, Jr., Public Service Electric & Gas Co., Newark, New Jersey
F. R. Fleet, Natural Gas Pipeline Company of America, Lombard, Illinois
M. A. Francis, LTV Steel Tubular Products Co., Youngstown, Ohio
P. R. Goodholm, Visalia, California
J. E. Hansford, Enron Gas Pipeline Operating Co., Houston, Texas
D. J. Hicks, Endeco Engineering Consultants, Tulsa, Oklahoma
D. T. Hisey, ARCO Transportation Alaska, Anchorage, Alaska
M. C. Hocking, Transcontinental Gas Pipe Line, Houston, Texas
E. A. Jonas, Bethlehem, Pennsylvania
J. J. Kieffer, Union Carbide Corp., Tonawanda, New York
J. D. McNorgan, Southern California Gas Co., Los Angeles, California
A. I. Macdonald, Upland, California
R. E. Miller, Columbia Gas Systems Service Corp., Columbus, Ohio
R. A. Mueller, OXY USA Inc., Tulsa, Oklahoma
P. O. Mullens, Phillips Petroleum Co., Bartesville, Oklahoma
D. L. Price, Texas Eastern Gas Pipe Line Co., Harrisburg, Pennsylvania
W. F. Quinn, El Paso Natural Gas Co., El Paso, Texas
A. T. Richardson, Tenneco Gas Transportation Co., Houston, Texas
C. G. Roberts, Williams Brothers Engineering Co., Tulsa, Oklahoma
R. A. Schmidt, Ladish Co., Russelville, Arkansas
B. Taksa, Gulf Interstate Engineering, Houston, Texas
C. J. Tateosian, Walnut Creek, California
A. T. Tyler, Gulf Interstate Engineering Co., Houston, Texas
H. M. Wilkinson, Houston, Texas
G. J. Wolf, Office of Pipeline Safety, U. S. Department of Transportation, Washington, District of Columbia
R. A. Wolf, Transok Inc., Tulsa, Oklahoma
J. M. Wood, Oklahoma Natural Gas Co., Tulsa, Oklahoma
D. W. Wright, Sun Pipe Line Co., Tulsa, Oklahoma
C. C. Wright, Jr., Paola, Kansas
J. S. Zurcher, Panhandle Eastern Pipe Line Co., Houston, Texas

B31 COORDINATING COMMITTEE

D. M. Fischer, *Chairman*, Sargent & Lundy, Chicago, Illinois
C. J. Gomez, *Secretary*, ASME, New York, New York
L. E. Hayden, Jr., Victaulic Company of America, Easton, Pennsylvania
R. R. Hoffmann, Federal Energy Regulatory Commission, Washington, District of Columbia
H. A. Sosnin, Jenkintown, Pennsylvania

B31 FABRICATION AND EXAMINATION TECHNICAL COMMITTEE

P. D. Flenner, *Chairman*, Consumers Power Co., Jackson, Michigan
C. J. Gomez, *Secretary*, ASME, New York, New York
P. C. DuPernell, Lancaster, New York
T. E. Estilow, Newark, Delaware
L. E. Hartsell, Fluor Daniel, Dallas, Texas
D. G. Hopkins, E I duPont de Nemours & Co., Newark, Delaware
A. D. Nance, Evans, Georgia
R. I. Seals, Berkeley, California
H. A. Sosnin, Jenkintown, Pennsylvania

B31 MECHANICAL DESIGN COMMITTEE

R. W. Haupt, *Chairman*, Pressure Piping Engrg Associates Inc., Foster City, California
C. J. Gomez, *Secretary*, ASME, New York, New York
J. P. Breen, O'Donnell & Associates Inc., Pittsburgh, Pennsylvania
A. C. Dzykewicz, Bristol, Rhode Island
J. A. Graziano, Farragut, Tennessee
B. P. Holbrook, Riley Stoker Corp., Worcester, Massachusetts
W. J. Koves, UOP Inc., Des Plaines, Illinois
P. L. Lin, Fluor Engineers Inc., Chicago, Illinois
T. Q. McCawley, Charlotte, North Carolina
E. Michalopoulos, Hartford Steam Boiler Inspection and Insurance Co., Hartford, Connecticut
J. C. Minichiello, ABB Impell Corp., Lincolnshire, Illinois
A. D. Nance, Evans, Georgia
T. W. Pickel, Jr., Martin Marietta Energy Systems Inc., Oak Ridge, Tennessee
E. C. Reed, Babcock & Wilcox Co., Barberton, Ohio
Q. N. Truong, Houston, Texas
G. E. Woods, Kingwood, Texas

B31 CONFERENCE GROUP

M. E. Bajandas, Department of Labor & Human Resources, Hato Ray, Puerto Rico
R. Beaucamp, Department of Labor, Lincoln, Nebraska
J. E. Brennan, Division of Boiler Inspection, Columbus, Ohio
W. E. Brown, State of Kansas, Shawnee Mission, Kansas
G. Bynog, Texas Department of Labor & Standards, Austin, Texas
R. Coomes, Department of Housing, Buildings, and Construction, Frankfort, Kentucky
Z. C. Cordero, Michigan Department of Labor, Lansing, Michigan
J. C. Cvar, Division of Boiler Safety, Dover, Delaware
A. W. Diamond, Department of Labour & Manpower, St. Johns, Newfoundland, Canada
M. P. Fitzpatrick, Department of Labour & Human Resources, Fredericton, New Brunswick, Canada
J. W. Greenawalt, Jr., Oklahoma Department of Labor, Oklahoma City, Oklahoma
G. Grodecki, Ministry of Consumer & Commercial Relations, Toronto, Ontario, Canada
R. D. Herman, Saskatchewan Labour, Regina, Saskatchewan, Canada
D. W. Johansen, Public Service Commission, Jefferson City, Missouri
A. Justin, State of Minnesota, Saint Paul, Minnesota
J. T. Little, Industrial Commission of Arizona, Phoenix, Arizona
W. T. Malloy, Washington Utilities & Transportation Commission, Olympia, Washington
R. G. Marini, New Hampshire Public Utilities Commission, Concord, New Hampshire
I. W. Mault, Labour & Manpower, Winnipeg, Manitoba, Canada
A. W. Meiring, Department of Fire Prevention & Building Safety, Indianapolis, Indiana
E. E. Morgan, Boiler Inspection Section, Denver, Colorado
J. W. Morvant, Office of State Fire Marshal, Baton Rouge, Louisiana
R. F. Mullaney, Boiler & Pressure Vessel Safety Branch, Vancouver, British Columbia, Canada
W. A. Owen, North Dakota Public Service Commission, Bismarck, North Dakota
W. M. Picardo, Department of Consumer & Regulatory Affairs, Washington, District of Columbia
R. Sauve, Government of Quebec, Montreal, Quebec, Canada
P. Sher, Department of Public Utility Control, New Britain, Connecticut
H. E. Shutt, Illinois Commerce Commission, Springfield, Illinois
J. L. Smith, Alberta Department of Labour, Edmonton, Alberta, Canada
R. L. Smith, Public Service Commission, Columbia, South Carolina
M. L. Snow, Jr., Department of Commerce and Insurance, Nashville, Tennessee
E. L. Sparrow, Bureau of Pipeline Safety, Newark, New Jersey
D. Stursma, Iowa State Commerce Commission, Des Moines, Iowa
R. P. Sullivan, Department of Labor, Augusta, Maine
C. W. Thompson, Department of Labor, Little Rock, Arkansas

R. W. Vindich, Department of Labor & Industry, Harrisburgh, Pennsylvania
L. E. Waldrop, Public Service Commission, Montgomery, Alabama
C. H. Walters, Boiler & Elevator Programs, Portland, Oregon
M. W. A. West, Department of Fisheries & Labour, Charlottetown, Prince Edward Island, Canada
T. F. Wickham, Department of Labor, Providence, Rhode Island
R. A. Yeo, Department of Labour and Manpower, Halifax, Nova Scotia, Canada

B31 NATIONAL INTEREST REVIEW GROUP

Aluminum Association — W. W. Pritsky
American Boiler Manufacturers Association — R. J. Fletcher
American Institute of Chemical Engineers — W. C. Carnell
American Iron and Steel Institute — J. R. Pegues
American Petroleum Institute, Division of Refining — H. M. Howarth
American Pipe Fitting Association — J. Thielsch
American Society of Heating, Refrigeration & Air Conditioning Engineers — H. R. Kornblum
American Welding Society — H. A. Sosnin
Chemical Manufacturers Association — D. R. Frikken
Compressed Gas Association — M. F. Melchioris
Copper Development Association — A. Cohn
Ductile Iron Pipe Research Association — T. F. Stroud
Edison Electric Institute — R. L. Williams
International District Heating Association — G. Von Bargen
Manufacturers Standardization Society of the Valve and Fittings Industry — R. A. Schmidt
Mechanical Contractors Association of America — W. E. Maloney
National Association of Plumbing-Heating-Cooling Contractors — R. E. White
National Association of Regulatory Utility Commissioners — D. W. Snyder
National Fire Protection Association — T. C. Lemoff
National Fluid Power Association — H. Anderson
Naval Sea Systems Command — T. W. Hull
Pipe Fabrication Institute — L. Katz
Slurry Transport Association — P. E. Snoek
Society of Ohio Safety Engineers — J. M. Holleran
Valve Manufacturers Association — R. A. Handschumacher

CONTENTS

Foreword iii
Personnel iv

Part 1 **Introduction** 1
1.1 Scope 1
1.2 Limitations 1
1.3 Initial Development 2
1.4 Methodology and Research Procedures 2
1.5 How to Use the Manual 3
1.6 The Meaning of Acceptance 5
1.7 Other Means of Determining Safe Pipeline Operating Pressure 5
1.8 Computer Programs 5

Figures
Fig. 1-1 Parabolic Criteria for Classifying Corrosion Defects According to Predicted Failure Stress 4
Fig. 1-2 Procedure for Analysis of Corroded Pipe Strength 6

Part 2 **Determination of Maximum Allowable Longitudinal Extent of Corrosion** 9

Figures
Fig. 2-1 Corrosion Parameters Used in Analysis 10
Fig. 2-2 Curve for Determining the Value of B 11

Part 3 **Tables for Corrosion Limits** 13

Tables
Table 3-1 Values of L for Pipe Sizes ≥ NPS 2 and < NPS 6 14
Table 3-2 Values of L for Pipe Sizes ≥ NPS 6 and < NPS 10 15

Table 3-3	Values of L for Pipe Sizes ≥ NPS 10 and < NPS 16	16
Table 3-4	Values of L for Pipe Sizes ≥ NPS 16 and < NPS 20	17
Table 3-5	Values of L for Pipe Sizes ≥ NPS 20 and < NPS 24	18
Table 3-6	Values of L for Pipe Sizes ≥ NPS 24 and < NPS 30	19
Table 3-7	Values of L for Pipe Sizes ≥ NPS 30 and < NPS 36	20
Table 3-8	Values of L for Pipe Sizes ≥ NPS 36 and < NPS 42	21
Table 3-9	Values of L for Pipe Sizes ≥ NPS 42 and < NPS 48	22
Table 3-10	Values of L for Pipe Sizes ≥ NPS 48 and < NPS 52	26
Table 3-11	Values of L for Pipe Sizes ≥ NPS 52 and < NPS 56	30
Table 3-12	Values of L for Pipe Sizes ≥ NPS 56 and < NPS 60	34
Part 4	**Evaluation of MAOP in Corroded Area**	39
4.1	Computation of A	39
4.2	Computation of P'	39
4.3	MAOP and P'	42
Figures		
Fig. 4-1	Curve for Obtaining P' as a Function of d/t for Values of A Less Than or Equal to 4.0	40
Fig. 4-2	P' as a Function of d/t for Values of A Greater Than 4.0	41
Appendices		
Appendix A	BASIC Computer Program, CRVL.BAS, for Determining Allowable Length L (Part 2) or Alternative Maximum Allowable Operating Pressure (Part 4)	43
Appendix B	BASIC Computer Program, CRLGTHU.BAS, Used in Generating Tables Like Those Which Are Printed in Part 3	51

PART 1
INTRODUCTION

1.1 SCOPE

The scope of this Manual includes all pipelines within the scope of the pipeline codes that are part of ASME B31 Code for Pressure Piping, i.e., ASME B31.4, Liquid Transportation Systems for Hydrocarbons, Liquid Petroleum Gas, Anhydrous Ammonia, and Alcohols; ASME B31.8, Gas Transmission and Distribution Piping Systems; and ASME B31.11, Slurry Transportation Piping Systems. Parts 2, 3, and 4 are based on material included in ASME Guide for Gas Transmission and Distribution Piping Systems, 1983 Edition.

This Manual is not applicable to new construction covered under the B31 Code Sections. That is, it is not intended that this Manual be used to establish acceptance standards for pipe that may have become corroded prior to or during fabrication and/or installation.

This Manual is intended solely for the purpose of providing guideline information for the designer/owner/operator. Thus, the specific use of this Manual is the responsibility of the designer/owner/operator.

1.2 LIMITATIONS

(a) This Manual is limited to corrosion on weldable pipeline steels categorized as carbon steels or high strength low alloy steels. Typical of these materials are those described in ASTM A 53, A 106, and A 381, and API 5L. (The current API 5L includes all Grades formerly in API 5LX and 5LS.)

(b) This Manual applies only to defects in the body of line pipe which have relatively smooth contours and cause low stress concentration (e.g., electrolytic or galvanic corrosion, loss of wall thickness due to erosion).

(c) This procedure should not be used to evaluate the remaining strength of corroded girth or longitudinal welds or related heat affected zones, defects caused by mechanical damage, such as gouges and grooves, and defects introduced during pipe or plate manufacture, such as seams, laps, rolled ends, scabs, or slivers.

(d) The criteria for corroded pipe to remain in service presented in this Manual are based only upon the ability of the pipe to maintain structural integrity under internal pressure. It should not be the sole criterion when the pipe is subject to significant secondary stresses (e.g., bending), particularly if the corrosion has a significant transverse component

(e) This procedure does not predict leaks or rupture failures.

1.3 INITIAL DEVELOPMENT

In the late 1960s, a major long-lines gas transmission pipeline company in conjunction with the Battelle Memorial Institute in Columbus, Ohio, began a research effort to examine the fracture initiation behavior of various kinds of corrosion defects in line pipe. This included determining the relationship between the size of a defect and the level of internal pressure that would cause the defect to leak or rupture. The testing by the gas pipeline company and Battelle demonstrated that there was indeed a possibility of developing methodology and procedures to analyze varying degrees of corrosion of existing pipelines. From this, an operator could make a valid determination as to whether the pipelines could safely remain in service or should be repaired or replaced. As the awareness of this research program grew, other transmission companies began to express considerable interest.

Beginning in the early 1970s, the American Gas Association (AGA) Pipeline Research Committee assumed responsibility for this activity and began developing methods for predicting the pressure strength of line pipe containing various sizes of corrosion defects.

The overall objective of these experiments was to examine the fracture initiation behavior of various sizes of corrosion defects by determining the relationship between the size of a defect and the level of internal pressure that would cause a leak or rupture.

1.4 METHODOLOGY AND RESEARCH PROCEDURES

The procedure contained in this Manual is based upon pressuring actual corroded pipe to failure in an extensive series of full-size tests. Since there was pipe available that had been removed from service and that had sustained corrosion damage, it seemed more logical to test these full-size, actual field specimens, either in place or in a large, full-scale test cell, rather than base these guidelines upon purely laboratory tests using machined defects. Several hundred full-scale pipe tests were conducted on all types of defects to establish general defect behavior. Mathematical expressions to calculate the pressure strength of corroded pipe materials were developed on the basis of these extensive tests. These mathematical expressions, although semiempirical, were founded upon well established principles of fracture mechanics. The basis principle of fracture mechanics is that the resistance of the material to unstable fracturing in the presence of a defect is related to the size of the defect and an inherent metal property called toughness. The tougher the material, the larger the flaw that can be tolerated before failure will occur. Also, the bigger the defect, the lower the pressure at which a leak or rupture will occur. These two features may seem obvious, but they form the basis of fracture mechanics in terms of determining the real strength of pipe containing defects.

During 1970 and 1971, 47 pressure tests were conducted on several pipe sizes to evaluate the effectiveness of the mathematical expressions in determining the strength of corroded areas. The diameter of the pipe material examined ranged from 16 in. through 30 in. and wall thickness varied from 0.312 in. through 0.375 in. The pipe materials have ranged in yield strength from about 25,000 psi for API 5L Grade A-25 to about 52,000 psi for 5LX Grade X-52.

The mathematical expressions developed from the earlier experiments have been modified based on later test results and now provide reliable estimates of the failure pressures for corrosion defects over the range of materials covered in this study. The experiments

on corroded pipe indicated that line pipe steels have adequate toughness and that the toughness is not a significant factor. The failure of blunt corrosion flaws is controlled by their size and the flow stress or yield stress of the material.

Figure 1-1 shows the relationship between the full-size test failures and the criterion for acceptance of corrosion pits in line pipe. The criterion is that they shall withstand a pressure equal to a stress level of 100% of the specified minimum yield stress (SMYS). The Figure is based on an assured parabolic profile of the corroded regions and presents the maximum corrosion depth, divided by the pipe wall thickness, plotted against the corrosion length, divided by the square root of the pipe radius times wall thickness. Each of the data points plotted represents one full-size pipe experiment on corroded pipe, and the number next to the data point represents the stress at failure pressure expressed as percent SMYS. There are only 3 data points (experiments) that failed at pressure levels below 100% SMYS, indicating the lack of severity of corrosion defects in general (note that all three would be rejected by this criterion). The solid line shown on the Figure is the line that identifies failure pressures of less than 100% SMYS. There are a number of data points that are below this line, but all of them represent failures above 100% SMYS. The fact that these are above 100% SMYS simply indicates that the criterion is very conservative.

The acceptable region in the plot is the shaded region below and to the left of the solid line. The Tables in Part 3 are based on corrosion depths and lengths determined by this solid line. Corrosion pits that have depths and lengths that fall above the curve are not acceptable, in accordance with the criteria presented herein, and the operating pressure either has to be reduced, or the corrosion pit removed or repaired.

1.5 HOW TO USE THE MANUAL

Part 2, Determination of Maximum Allowable Longitudinal Extent of Corrosion, sets forth the equations for determining the severity of the corroded areas. It tells the operator how to measure the longitudinal extent and maximum depth of the corroded areas. One can then use Eq. (2) of Part 2 to determine if the corroded area is serious.

However, it is recognized that most field operators will prefer a simpler method of evaluating a corroded area. Therefore, Part 3, Tables for Corrosion Limits, evaluates Eq. (2) and places the results in tabular form. This allows the field operator to make decisions simply by going to a table after measuring the longitudinal extent and maximum depth of the corroded area and making a choice.

Locate the table appropriate for the pipe O.D. and wall thickness. Look down the left column and find the depth of corrosion that is equal to or the next number larger than the measured maximum depth of the corroded area. Read across to the column headed by the wall thickness or next number lower than the pipe's nominal wall thickness to determine the maximum allowable longitudinal extent of the corroded area for the depth of corrosion. If the measured longitudinal extent of the corroded area is equal to or less than the maximum allowable longitudinal extent of the corroded area determined from the Table, the pipe strength is suitable for the present MAOP[1] and is capable of containing a test pressure that will produce a stress of 100% SMYS of the pipe material.

[1]As used in this manual, the term MAOP shall represent maximum steady state operating pressure for pipelines within the scope of ASME B31.4 and ASME B31.11 and maximum allowable operating pressure for pipelines within the scope of ASME B31.8.

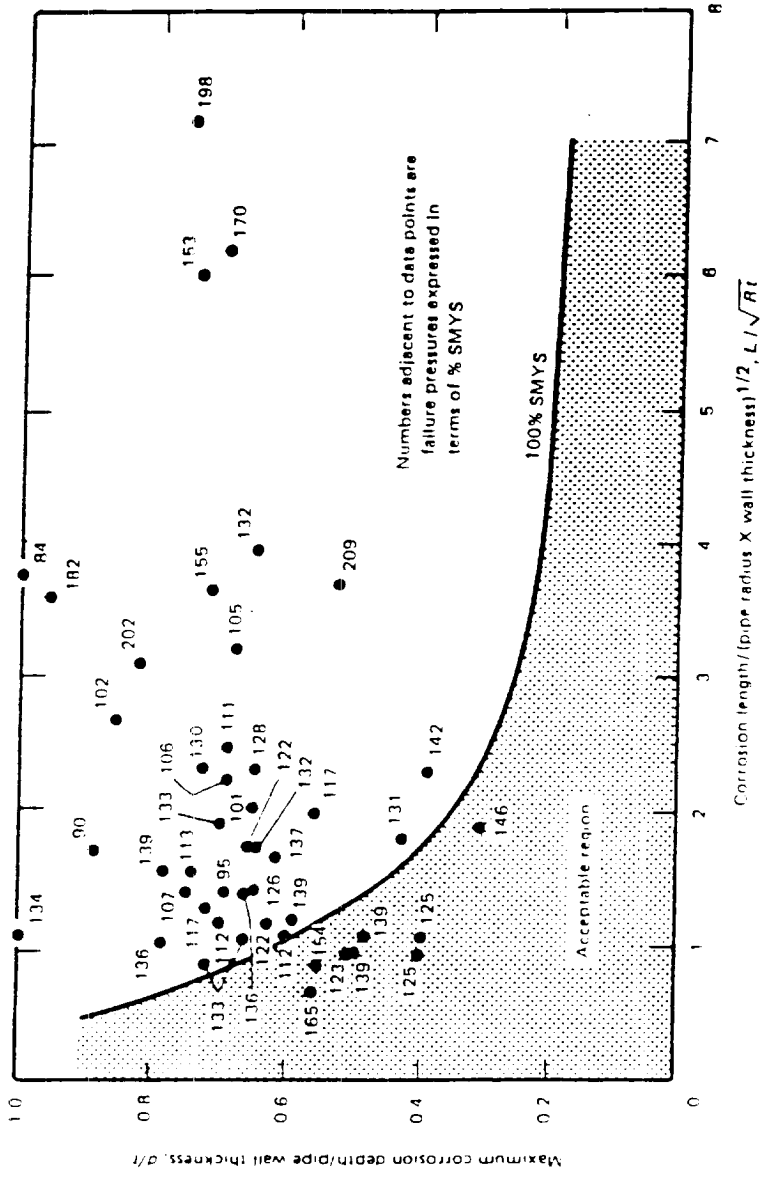

FIG. 1-1 PARABOLIC CRITERIA FOR CLASSIFYING CORROSION DEFECTS ACCORDING TO PREDICTED FAILURE STRESS

The tables produce results which may be more conservative than Eq. (2) of Part 2. The tables could show that the corroded area is unsuitable for the current MAOP, but Eq. (2) may show that it is. Therefore, it is possible for the corroded region to be rejected by the tables, but found suitable by using Eq. (2).

If the tables and Eq. (2) both show the corroded region to be unsuitabe, it may still be possible to establish suitability by one of the methods mentioned in para. 1.7. Another alternative would be to lower the MAOP of the pipeline, if permitted by operating conditions. Part 4 can be used to determine a lower MAOP that has the same safety factor provided by Parts 2 and 3.

Regardless of which alternative is chosen, in all cases where the corroded region is to be left in service, measures should be taken to arrest further corrosion. Such measures should include coating the corroded region and, if indicated, increasing the cathodic protection level.

Figure 1-2 , Procedure for Analysis of Corroded Pipe Strength, shows the steps necessary to proceed through the evaluation of a corroded area on a pipeline in order to determine if any corrective action is needed. The steps shown in the dashed boxes are valid means of determining a safe operating pressure (or MAOP), but the procedures for conducting these steps or the acceptance levels are not in this Manual.

1.6 THE MEANING OF ACCEPTANCE

(a) Any corroded region indicated as acceptable by the criteria of this Manual for service at the established MAOP is capable of withstanding a hydrostatic pressure test that will produce a stress of 100% of the pipe SMYS.

(b) Any corroded region indicated as acceptable for service at a reduced MAOP is capable of withstanding a hydrostatic pressure test at a ratio above the MAOP equal to the ratio of a 100% SMYS test to 72% SMYS operation (1.39:1). If a larger ratio is desired, the reduced MAOP can be adjusted accordingly.

1.7 OTHER MEANS OF DETERMINING SAFE PIPELINE OPERATING PRESSURE

(a) The operator can make a more rigorous analysis of the corroded area to determine the remaining strength by performing a fracture mechanics analysis based upon established principles and practices using the actual profile of the corroded region.

(b) The operator can reestablish the MAOP by a complete hydrostatic pressure test that produces a minimum stress of 100% SMYS, or establish a lower MAOP based on the pressure of a successful test conducted at a lower pressure.

(c) The procedures and acceptance criteria for conducting these alternative acceptance tests, either fracture mechanics analysis or hydrostatic tests, are not included in this Manual.

1.8 COMPUTER PROGRAMS

Appendix A is a BASIC computer program, CRVL.BAS, developed by Mr. Richard L. Seifert and is based on the equations in Parts 2 and 4. It can be used to expedite the evaluation procedure. Several examples of the program output are shown.

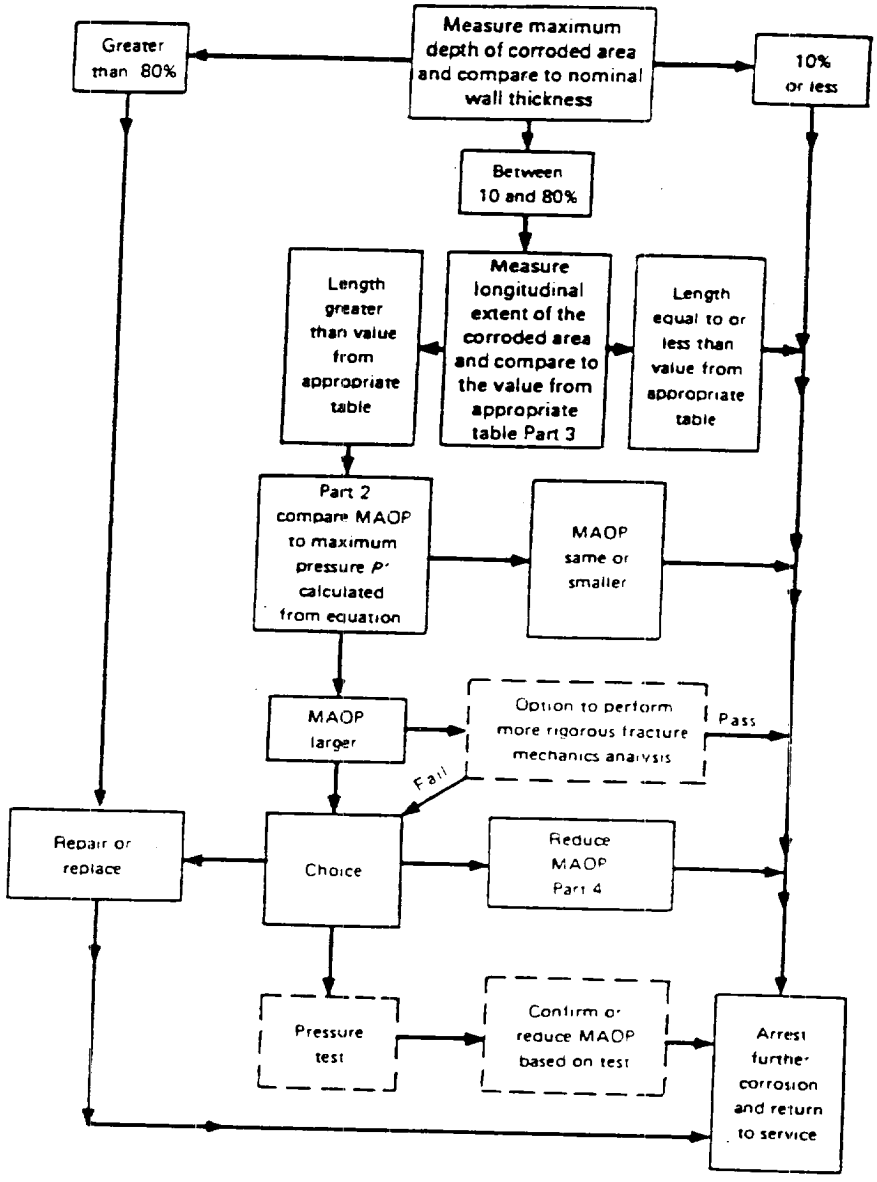

FIG. 1-2 PROCEDURE FOR ANALYSIS OF CORRODED PIPE STRENGTH

Appendix B is a BASIC computer program, CRLGTHU.BAS by Mr. Seifert, which is an upgrade of CRLGTH.BAS, which was contained in the first printing of this Manual. CRLGTH.BAS was used to produce some of the tables in Part 3. It required that the BASIC program be modified slightly each time it was used. The new program CRLGTHU.BAS does not require modification. It will produce a printed table of maximum acceptable corrosion lengths for a given pipe diameter, and up to ten wall thicknesses of that diameter. An example of a printed table by this program is included at the end of Appendix B.

Both CRVL.BAS and CRLGTHU.BAS were written in BASIC for a specific computer/printer combination and can be utilized by most state-of- the-art microprocessors. However, minor modifications may be necessary for use on other equipment or for other purposes.

These computer programs are reproduced herein solely for the convenience of the Manual user, and ASME and the auther make no claims as to their accuracy or effectiveness.

PART 2
DETERMINATION OF MAXIMUM ALLOWABLE LONGITUDINAL EXTENT OF CORROSION

The depth of a corrosion pit may be expressed as a percent of the nominal wall thickness of the pipe by:

$$\% \text{ pit depth} = 100d/t \tag{1}$$

where

d = measured maximum depth of the corroded area, in., as shown in Fig. 2-1

t = nominal wall thickness of the pipe, in. Additional wall thickness required for concurrent external loads shall not be included in the calculations.

A contiguous corroded area having a maximum depth of more than 10% but less than 80% of the nominal wall thickness of the pipe should not extend along the longitudinal axis of the pipe for a distance greater than that calculated from:

$$L = 1.12B\sqrt{Dt} \tag{2}$$

(L may also be determined from Tables 3-1 through 3-12 in Part 3.)

where

L = maximum allowable longitudinal extent of the corroded area, in., collinear with L_M in Fig. 2-1

D = nominal outside diameter of the pipe, in.

B = a value which may be determined from the curve in Fig. 2-2 or from:

$$B = \sqrt{\left(\frac{d/t}{1.1\,d/t - 0.15}\right)^2 - 1} \tag{3}$$

except that B may not exceed the value 4. If the corrosion depth is between 10% and 17.5%, use $B = 4.0$ in Eq. (2).

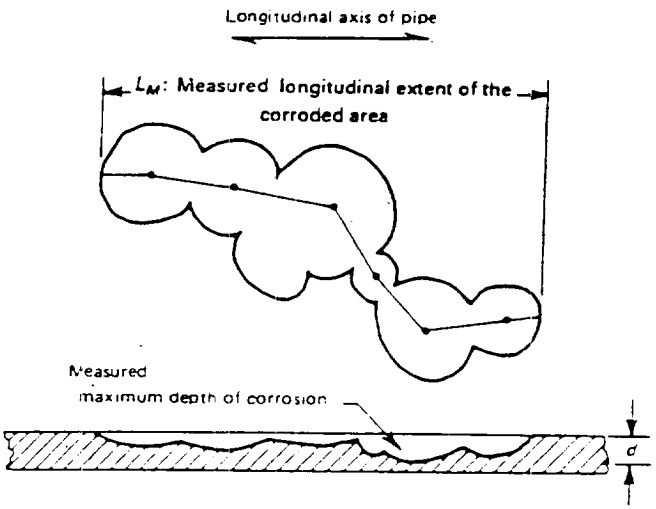

FIG. 2-1 CORROSION PARAMETERS USED IN ANALYSIS

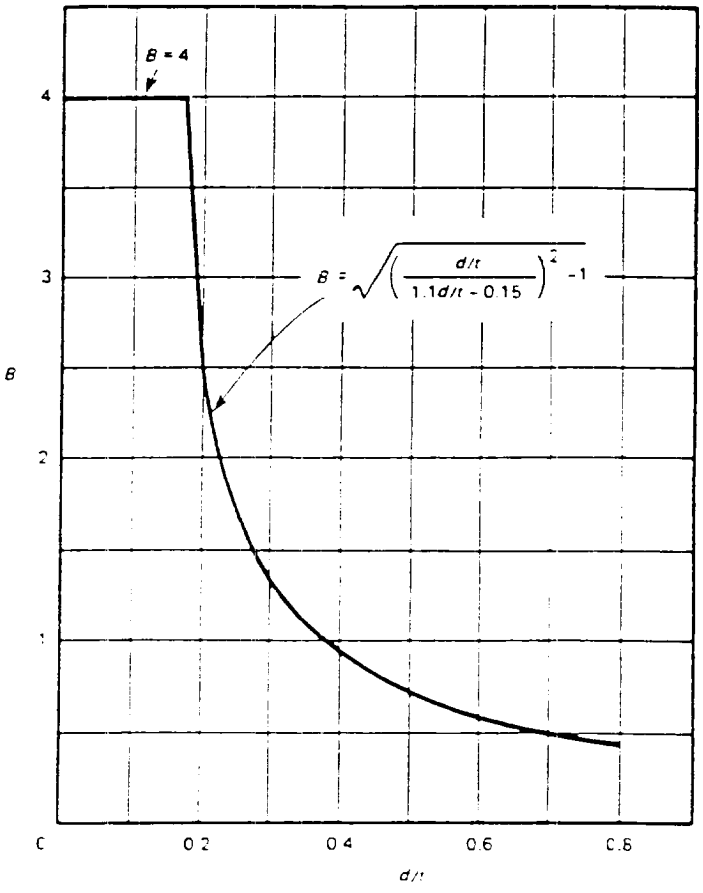

FIG. 2-2 CURVE FOR DETERMINING THE VALUE B

PART 3
TABLES FOR CORROSION LIMITS

The tables in this Part are calculated from the equations in Part 2. They provide a ready reference of maximum corrosion lengths for a spectrum of pipe diameters, wall thicknesses, and pit depths. These Tables may be used to determine the maximum allowable longitudinal extent of a contiguous area of corrosion as given in Part 2.

(a) The corroded area must be clean to bare metal. Care should be taken when cleaning corroded areas of a pressurized pipeline.

(b) Measure the maximum depth of the corroded area d and the longitudinal extent of the corroded area as shown in Fig. 2-1.

(c) Determine the size (NPS) of the pipe and nominal wall thickness.

(d) Turn to the page in the Table corresponding to the size (NPS) of the pipe.

(e) Locate the row showing a depth equal to the measured maximum depth of the corroded area. If the exact measured value is not listed, choose the row showing the NEXT GREATER DEPTH.

(f) Scan across to the column showing the wall thickness of the pipe. If the nominal wall thickness is not listed, use the column for the NEXT THINNER WALL. The value L found at the intersection of the wall thickness column and depth row is the maximum allowable longitudinal extent of such a corroded area.

(g) The tables in Part 3 produce results which may be more conservative than those obtained from the equations in Part 2. Therefore, the tables could show that a given corroded area is unsuitable for the current MAOP, but the use of the equations in Part 2 may show that it is acceptable.

TABLE 3-1 VALUES OF *L* FOR PIPE SIZES ≥ NPS 2 AND < NPS 6

Depth, *d*, in.	Wall Thickness, *t*, in. 0.083	0.109	0.125	0.141	0.154	0.172	0.188	0.218
0.01	2	.....	.....	.....	.....	.....	.....	.....
0.02	15/16	1 15/16	2 7/16	2 9/16	2 11/16	2 7/8	3	.....
0.03	1/2	7/8	1 1/8	1 1/2	1 15/16	2 7/8	3	3 1/4
0.04	3/8	5/8	3/4	15/16	1 1/8	1 3/8	1 1/4	2 1/4
0.05	5/16	7/16	9/16	11/16	13/16	1	1 3/16	1 3/8
0.06	1/4	3/8	1/2	9/16	11/16	13/16	15/16	1 3/16
0.07	.....	5/16	7/16	1/2	9/16	11/16	3/4	1
0.08	.....	5/16	3/8	7/16	1/2	9/16	11/16	13/16
0.09	.....	.....	5/16	3/8	7/16	1/2	9/16	3/4
0.10	.....	.....	1/4	5/16	3/8	7/16	1/2	11/16
0.11	.....	.....	.....	5/16	3/8	7/16	1/2	5/8
0.12	.....	.....	.....	.....	5/16	3/8	7/16	9/16
0.13	.....	.....	.....	.....	.....	5/16	3/8	1/2
0.14	.....	.....	.....	.....	.....	.....	5/16	7/16
0.15	.....	.....	.....	.....	.....	.....	5/16	7/16
0.16	.....	.....	.....	.....	.....	.....	.....	3/8
0.17	.....	.....	.....	.....	.....	.....	.....	3/8

TABLE 3-2 VALUES OF L FOR PIPE SIZES ≥ NPS 6 AND < NPS 10

Depth, d, in.	Wall Thickness, t, in. 0.083	0.125	0.156	0.188	0.203	0.219	0.250	0.312
0.010	3 3/16	.....	.....	.....	.....	.....	.....	.....
0.020	1 1/2	4 5/16	4 9/16	5	.....	.....	.....	.....
0.030	7/8	1 7/8	3 3/8	5	5 3/16	5 1/8	5 3/4	.....
0.040	5/8	1 1/4	1 7/8	2 15/16	3 5/8	4 5/8	5 3/4	6 7/16
0.050	1/2	15/16	1 3/8	1 15/16	2 5/16	2 3/4	3 7/8	6 7/16
0.060	7/16	13/16	1 1/8	1 3/16	1 3/4	2 1/16	2 11/16	4 3/4
0.070	.....	11/16	15/16	1 5/16	1 7/16	1 11/16	2 1/8	3 1/8
0.080	.....	9/16	13/16	1 1/8	1 1/4	1 7/16	1 3/4	2 11/16
0.090	.....	1/2	3/4	1	1 1/8	1 1/4	1 9/16	2 1/4
0.100	.....	7/16	11/16	7/8	1	1 1/8	1 3/8	2
0.110	.....	.....	9/16	13/16	7/8	1	1 1/4	1 3/4
0.120	.....	.....	9/16	3/4	13/16	15/16	1 1/8	1 5/8
0.130	.....	.....	.....	11/16	3/4	7/8	1 1/16	1 7/16
0.140	.....	.....	.....	5/8	11/16	13/16	15/16	1 3/8
0.150	.....	.....	.....	9/16	5/8	3/4	7/8	1 1/4
0.160	.....	.....	.....	.....	9/16	11/16	13/16	1 5/16
0.170	.....	.....	.....	.....	.....	5/8	3/4	1 1/8
0.180	.....	.....	.....	.....	.....	.....	3/4	1 1/16
0.190	.....	.....	.....	.....	.....	.....	11/16	1
0.200	.....	.....	.....	.....	.....	.....	5/8	15/16
0.210	.....	.....	.....	.....	.....	.....	.....	7/8
0.220	.....	.....	.....	.....	.....	.....	.....	13/16
0.230	.....	.....	.....	.....	.....	.....	.....	13/16
0.240	.....	.....	.....	.....	.....	.....	.....	3/4

TABLE 3-3 VALUES OF L FOR PIPE SIZES ≥ NPS 10 AND < NPS 16

Depth, d, in.	Wall Thickness, t, in.							
	0.156	0.219	0.250	0.307	0.344	0.365	0.438	0.500
0.020	5 13/16	.....	.....	.....	.....	.....	.....	.....
0.030	4 5/16	6 7/8	7 1/8	.....	.....	.....	.....	.....
0.040	2 7/16	5 15/16	7 1/8	8 1/8	8 3/8	8 7/8	.....	.....
0.050	1 3/4	3 1/2	4 15/16	8 1/8	8 3/8	8 7/8	9 1/4	10 1/8
0.060	1 7/16	2 9/16	3 1/8	5 3/4	8 3/8	8 7/8	9 1/4	10 1/8
0.070	1 3/16	2 1/8	2 11/16	4 1/8	5 1/2	6 1/8	9 1/4	10 1/8
0.080	1 1/16	1 13/16	2 1/4	3 5/16	4 3/16	4 7/8	8 1/8	10 1/8
0.090	15/16	1 5/16	1 15/16	2 13/16	3 1/2	3 13/16	6 1/8	9 1/8
0.100	13/16	1 7/16	1 3/4	2 7/16	3	3 1/8	4 15/16	6 15/16
0.110	3/4	1 3/16	1 9/16	2 1/16	2 5/8	2 15/16	4 1/8	5 5/8
0.120	11/16	1 1/16	1 7/16	2	2 1/8	2 5/8	3 11/16	4 13/16
0.130	.....	1	1 5/16	1 13/16	2 1/16	2 1/8	3 5/16	4 1/4
0.140	.....	15/16	1 1/4	1 11/16	2	2 1/16	3	3 15/16
0.150	.....	7/8	1 1/8	1 9/16	1 7/8	2 1/16	2 3/4	3 7/16
0.160	.....	13/16	1 1/16	1 7/16	1 3/4	1 15/16	2 9/16	3 1/16
0.170	.....	3/4	1	1 3/8	1 5/8	1 13/16	2 3/8	2 15/16
0.180	.....	.....	15/16	1 3/16	1 9/16	1 11/16	2 1/4	2 3/4
0.190	.....	.....	7/8	1 1/4	1 7/16	1 5/8	2 1/8	2 5/8
0.200	.....	.....	13/16	1 1/8	1 3/8	1 1/2	2	2 7/16
0.210	.....	.....	.....	1 1/8	1 3/16	1 7/16	1 7/8	2 5/16
0.220	.....	.....	.....	1 1/16	1 1/4	1 3/8	1 13/16	2 1/4
0.230	.....	.....	.....	1	1 1/16	1 5/16	1 3/4	2 1/8
0.240	.....	.....	.....	15/16	1 1/8	1 1/4	1 11/16	2 1/16
0.250	.....	.....	.....	.....	1 1/16	1 3/16	1 5/16	1 15/16
0.260	.....	.....	.....	.....	1 1/16	1 1/8	1 1/2	1 7/8
0.270	.....	.....	.....	.....	1	1 1/16	1 7/16	1 13/16
0.280	.....	.....	.....	.....	.....	15/16	1 7/16	1 3/4
0.290	.....	.....	.....	.....	.....	1	1 3/8	1 11/16
0.300	.....	.....	.....	.....	.....	.....	1 5/16	1 5/8
0.310	.....	.....	.....	.....	.....	.....	1 1/4	1 9/16
0.320	.....	.....	.....	.....	.....	.....	1 3/16	1 1/2
0.330	.....	.....	.....	.....	.....	.....	1 3/16	1 7/16
0.340	.....	.....	.....	.....	.....	.....	1 1/8	1 3/8
0.350	.....	.....	.....	.....	.....	.....	1 1/16	1 3/8
0.360	.....	.....	.....	.....	.....	.....	.....	1 5/16
0.370	.....	.....	.....	.....	.....	.....	.....	1 1/4
0.380	.....	.....	.....	.....	.....	.....	.....	1 1/4
0.390	.....	.....	.....	.....	.....	.....	.....	1 1/16
0.400	.....	.....	.....	.....	.....	.....	.....	1 1/16
0.410	.....	.....	.....	.....	.....	.....	.....	.....

TABLE 3-4 VALUES OF *L* FOR PIPE SIZES ≥ NPS 16 AND < NPS 20

Depth, *d*, in.	Wall Thickness, *t*, in. 0.188	0.250	0.312	0.344	0.375	0.438	0.500	0.625
0.020	7¾	.....	.....	.....	.....	.....	.....	.....
0.030	7¾	8 15/16	.....	.....	.....	.....	.....	.....
0.040	4½	8 15/16	10	10½	11	.....	.....	.....
0.050	3 1/16	6	10	10½	11	11⅞	12 11/16	.....
0.060	2⅜	4⅛	7 7/16	10½	11	11⅞	12 11/16	.....
0.070	2	3¼	5¼	6¾	8 13/16	11⅞	12 11/16	14 9/16
0.080	1¾	2¾	4 3/16	5⅛	6⅛	10 9/16	12 11/16	14 9/16
0.090	1½	2⅜	3½	4¼	5 1/16	7 7/16	11 9/16	14 9/16
0.100	1⅜	2⅛	3 1/16	3⅝	4 5/16	6	8½	14 9/16
0.110	1¼	1 15/16	2¾	3¼	3¾	5⅛	6⅞	13⅞
0.120	1⅛	1¾	2½	2 15/16	3⅜	4½	5⅞	10 7/16
0.130	1 1/16	1⅝	2¼	2 11/16	3 3/16	4	5 3/16	8⅝
0.140	15/16	1½	2⅛	2 7/16	2 13/16	3⅜	4⅝	7 7/16
0.150	⅞	1⅜	1 15/16	2¼	2⅝	3⅜	4¼	6 9/16
0.160	.....	1 5/16	1 13/16	2⅛	2 7/16	3⅛	3⅞	5 15/16
0.170	.....	1 3/16	1 11/16	2	2¼	2 15/16	3⅜	5¼
0.180	.....	1⅛	1⅝	1⅞	2⅛	2¾	3⅛	5
0.190	.....	1 1/16	1½	1¾	2	2 9/16	3 1/16	4⅝
0.200	.....	1	1 7/16	1 11/16	1 15/16	2 7/16	3	4⅜
0.210	.....	.....	1⅜	1⅝	1 13/16	2 5/16	2⅞	4⅛
0.220	.....	.....	1 5/16	1½	1¾	2 3/16	2 11/16	3⅞
0.230	.....	.....	1¼	1 7/16	1 11/16	2⅛	2 5/16	3 11/16
0.240	.....	.....	1 3/16	1⅜	1 9/16	2	2½	3½
0.250	.....	.....	.....	1 5/16	1½	1 15/16	2⅜	3⅜
0.260	.....	.....	.....	1¼	1 5/16	1⅞	2¼	3¼
0.270	.....	.....	.....	1 1/16	1⅛	1 13/16	2 1/16	3⅛
0.280	.....	.....	.....	.....	1 1/16	1 11/16	2⅛	3
0.290	.....	.....	.....	.....	1 1/16	1⅝	2 1/16	2⅞
0.300	.....	.....	.....	.....	1¼	1 5/16	1 15/16	2¾
0.310	.....	.....	.....	.....	.....	1 5/16	1⅞	2 11/16
0.320	.....	.....	.....	.....	.....	1½	1 13/16	2 9/16
0.330	.....	.....	.....	.....	.....	1 7/16	1¾	2½
0.340	.....	.....	.....	.....	.....	1⅜	1 11/16	2 7/16
0.350	.....	.....	.....	.....	.....	1 5/16	1 9/16	2⅜
0.360	.....	.....	.....	.....	.....	.....	1⅝	2 5/16
0.370	.....	.....	.....	.....	.....	.....	1 5/16	2¼
0.380	.....	.....	.....	.....	.....	.....	1½	2 3/16
0.390	.....	.....	.....	.....	.....	.....	1 7/16	2⅛
0.400	.....	.....	.....	.....	.....	.....	1 3/16	2 1/16
0.410	.....	.....	.....	.....	.....	.....	.....	2
0.420	.....	.....	.....	.....	.....	.....	.....	1 15/16
0.430	.....	.....	.....	.....	.....	.....	.....	1⅞
0.440	.....	.....	.....	.....	.....	.....	.....	1⅞
0.450	.....	.....	.....	.....	.....	.....	.....	1 13/16
0.460	.....	.....	.....	.....	.....	.....	.....	1¾
0.470	.....	.....	.....	.....	.....	.....	.....	1 11/16
0.480	.....	.....	.....	.....	.....	.....	.....	1 11/16
0.490	.....	.....	.....	.....	.....	.....	.....	1⅝
0.500	.....	.....	.....	.....	.....	.....	.....	1 9/16
0.510	.....	.....	.....	.....	.....	.....	.....	.....

TABLE 3-5 VALUES OF *L* FOR PIPE SIZES ≥ NPS 20 AND < NPS 24

Depth, *d*, in.	Wall Thickness, *t*, in. 0.219	0.250	0.344	0.406	0.469	0.500	0.562	0.625
0.030	9⅛	10	.....	.....	.....	.....	.....	.....
0.040	8 1/16	10	11¾	.....	.....	.....	.....	.....
0.050	4¾	6 11/16	11¾	12¾	13¾	14 3/16	.....	.....
0.060	3 9/16	4⅝	11¾	12¾	13¾	14 3/16	15	.....
0.070	2⅞	3 11/16	7 9/16	12¾	13¾	14 3/16	15	15 13/16
0.080	2 5/16	3 1/16	5¾	8⅞	13¾	14 3/16	15	15 13/16
0.090	2 1/16	2 11/16	4¾	6 13/16	10 3/16	12 13/16	15	15 13/16
0.100	1 15/16	2⅜	4 1/16	5 11/16	7 15/16	9½	14⅛	15 13/16
0.110	1¾	2⅛	3⅝	4⅞	6⅝	7 11/16	10⅝	15½
0.120	1⅝	1 15/16	3¼	4 5/16	5¾	6 9/16	8 11/16	11¾
0.130	1½	1 13/16	3	3 15/16	5 1/16	5¾	7 7/16	9 11/16
0.140	1⅜	1 11/16	2¾	3 9/16	4⅝	5 3/16	6 9/16	8 3/16
0.150	1¼	1 9/16	2 9/16	3 3/16	4 1/16	4¾	5⅞	7 9/16
0.160	1 3/16	1 7/16	2⅜	3 1/16	3⅞	4⅜	5⅜	6⅝
0.170	1 1/16	1⅜	2¼	2⅞	3⅝	4 1/16	4 15/16	6 1/16
0.180	.....	1¼	2⅛	2 11/16	3 1/16	3 13/16	4⅝	5 9/16
0.190	.....	1 1/16	2	2 9/16	3 1/16	3 9/16	4 5/16	5 3/16
0.200	.....	1⅛	1⅞	2 7/16	3 1/16	3⅜	4 1/16	4⅞
0.210	.....	.....	1 13/16	2 3/16	2⅞	3 1/16	3⅞	4 5/16
0.220	.....	.....	1 11/16	2 1/16	2¾	3 1/16	3⅝	4 1/16
0.230	.....	.....	1⅝	2⅛	2⅝	2⅞	3½	4⅛
0.240	.....	.....	1 9/16	2	2½	2¾	3 5/16	3 15/16
0.250	.....	.....	1½	1 15/16	2 5/16	2 11/16	3 3/16	3¾
0.260	.....	.....	1 7/16	1⅞	2 3/16	2 5/16	3 1/16	3⅝
0.270	.....	.....	1⅜	1¾	2¼	2 1/16	2 15/16	3 5/16
0.280	.....	.....	.....	1 11/16	2⅛	2⅜	2 13/16	3 3/16
0.290	.....	.....	.....	1⅝	2 1/16	2⅜	2¾	3 1/16
0.300	.....	.....	.....	1 9/16	2	2 3/16	2⅝	3⅛
0.310	.....	.....	.....	1½	1 15/16	2⅛	2 5/16	3
0.320	.....	.....	.....	1 7/16	1⅞	2 1/16	2 1/16	2⅞
0.330	.....	.....	.....	.....	1 13/16	2	2⅛	2 15/16
0.340	.....	.....	.....	.....	1¾	1 15/16	2 5/16	2¾
0.350	.....	.....	.....	.....	1 11/16	1⅞	2 1/16	2⅝
0.360	.....	.....	.....	.....	1⅝	1 13/16	2 3/16	2 9/16
0.370	.....	.....	.....	.....	1 5/16	1¾	2⅛	2½
0.380	.....	.....	.....	.....	.....	1 11/16	2 5/16	2 7/16
0.390	.....	.....	.....	.....	.....	1⅝	2	2⅜
0.400	.....	.....	.....	.....	.....	1 9/16	1 15/16	2 5/16
0.410	.....	.....	.....	.....	.....	.....	1⅞	2¼
0.420	.....	.....	.....	.....	.....	.....	1 11/16	2 1/16
0.430	.....	.....	.....	.....	.....	.....	1¾	2
0.440	.....	.....	.....	.....	.....	.....	1¾	1 15/16
0.450	.....	.....	.....	.....	.....	.....	.....	1 15/16
0.460	.....	.....	.....	.....	.....	.....	.....	1⅞
0.470	.....	.....	.....	.....	.....	.....	.....	1 11/16
0.480	.....	.....	.....	.....	.....	.....	.....	1¾
0.490	.....	.....	.....	.....	.....	.....	.....	.....
0.500	.....	.....	.....	.....	.....	.....	.....	.....
0.510	.....	.....	.....	.....	.....	.....	.....	.....

TABLE 3-6 VALUES OF L FOR PIPE SIZES ≥ NPS 24 AND < NPS 30

Depth, d, in.	Wall Thickness, t, in. 0.250	0.312	0.375	0.438	0.469	0.500	0.562	0.625
0.030	11	.....	.....	.....	.....	.....	.....	.....
0.040	11	12¼	13 7/16	.....	.....	.....	.....	.....
0.050	7 5/16	12¼	13 7/16	14½	15	15½	.....	.....
0.060	5 1/16	9 1/16	13 7/16	14½	15	15½	16 7/16	.....
0.070	4	6 7/16	10 13/16	14½	15	15½	16 7/16	17⅜
0.080	3⅛	5⅛	7¾	12½	15	15½	16 7/16	17⅜
0.090	2 15/16	4 5/16	6¼	9⅛	11 3/16	14	16 7/16	17⅜
0.100	2⅝	3¾	5¼	7⅜	8 11/16	10⅝	15 7/16	17⅜
0.110	2⅜	3⅜	4⅝	6¼	7¼	8 7/16	11⅜	16 13/16
0.120	2⅛	3 5/16	4⅛	5½	6¼	7 3/16	9½	12⅞
0.130	2	2 13/16	3¾	4 15/16	5 5/16	6 9/16	8⅛	10⅝
0.140	1 13/16	2 9/16	3 7/16	4 7/16	5 1/16	5 11/16	7 1/16	9⅛
0.150	1 11/16	2⅜	3 3/16	4⅛	4⅝	5 3/16	6 7/16	8 1/16
0.160	1 9/16	2¼	3	3 13/16	4¼	4¾	5⅞	7¼
0.170	1½	2⅛	2 13/16	3 9/16	4	4 7/16	5 5/16	6⅝
0.180	1⅜	2	2⅝	3⅜	3¾	4⅛	5⅛	6⅛
0.190	1 5/16	1⅞	2½	3 1/16	3½	3⅞	4¾	5 11/16
0.200	1¼	1¾	2⅜	3	3 5/16	3 11/16	4 7/16	5 5/16
0.210	.....	1 11/16	2¼	2⅞	3 3/16	3½	4 3/16	5
0.220	.....	1 5/16	2⅛	2 11/16	3	3 5/16	4	4¾
0.230	.....	1½	2 1/16	2 5/16	2⅞	3 3/16	3 11/16	4½
0.240	.....	1 7/16	1 15/16	2½	2¾	3 1/16	3⅝	4 5/16
0.250	.....	.....	1⅞	2⅜	2⅝	2 15/16	3½	4⅛
0.260	.....	.....	1¾	2¼	2½	2 13/16	3⅜	3 15/16
0.270	.....	.....	1 11/16	2 3/16	2 7/16	2 11/16	3 1/16	3 11/16
0.280	.....	.....	1⅝	2⅛	2 5/16	2⅝	3⅛	3⅝
0.290	.....	.....	1 9/16	2	2¼	2½	3	3½
0.300	.....	.....	1½	1 15/16	2 1/16	2⅜	2⅞	3⅜
0.310	.....	.....	.....	1⅞	2⅛	2 5/16	2 13/16	3¼
0.320	.....	.....	.....	1 13/16	2	2¼	2 11/16	3 3/16
0.330	.....	.....	.....	1¾	1 15/16	2 1/16	2⅝	3 1/16
0.340	.....	.....	.....	1 11/16	1⅞	2⅛	2½	3
0.350	.....	.....	.....	1⅝	1 13/16	2 1/16	2 7/16	2⅞
0.360	.....	.....	.....	.....	1¾	2	2⅜	2 13/16
0.370	.....	.....	.....	.....	1 11/16	1 15/16	2 5/16	2¾
0.380	.....	.....	.....	.....	.....	1⅞	2¼	2⅝
0.390	.....	.....	.....	.....	.....	1 13/16	2 3/16	2 9/16
0.400	.....	.....	.....	.....	.....	1¾	2⅛	2½
0.410	.....	.....	.....	.....	.....	.....	2 1/16	2 7/16
0.420	.....	.....	.....	.....	.....	.....	2	2⅜
0.430	.....	.....	.....	.....	.....	.....	1 15/16	2 5/16
0.440	.....	.....	.....	.....	.....	.....	1⅞	2¼
0.450	.....	.....	.....	.....	.....	.....	.....	2 1/16
0.460	.....	.....	.....	.....	.....	.....	.....	2⅛
0.470	.....	.....	.....	.....	.....	.....	.....	2⅛
0.480	.....	.....	.....	.....	.....	.....	.....	2 1/16
0.490	.....	.....	.....	.....	.....	.....	.....	2
0.500	.....	.....	.....	.....	.....	.....	.....	1 15/16
0.510	.....	.....	.....	.....	.....	.....	.....	.....

TABLE 3-7 VALUES OF L FOR PIPE SIZES ≥ NPS 30 AND < NPS 36

Depth, d, in.	Wall Thickness, t, in.						
	0.250	0.312	0.375	0.438	0.500	0.625	0.688
0.030	12¼	.....	.....	.....	.....	.....	.....
0.040	12¼	13 11/16	15	.....	.....	.....	.....
0.050	8 5/16	13 11/16	15	16¼	17⅞	.....	.....
0.060	5 11/16	10⅛	15	16¼	17⅞	.....	.....
0.070	4½	7 9/16	12⅛	16¼	17⅞	19⅝	.....
0.080	3¼	5 13/16	8 11/16	14	17⅞	19⅝	20⅝
0.090	3¼	4 13/16	6 15/16	10 5/16	15 1/16	19⅝	20⅝
0.100	2 15/16	4 3/16	5⅞	8 3/16	11 3/16	19⅝	20⅝
0.110	2⅝	3¼	5 5/16	7	9 7/16	18 15/16	20⅝
0.120	2⅝	3⅛	4⅝	6⅛	8 5/16	14 7/16	20⅝
0.130	2 5/16	3⅛	4 5/16	5½	7 1/16	11⅞	15 15/16
0.140	2 1/16	2⅞	3⅞	5	6⅝	10 5/16	13 1/16
0.150	1⅞	2 11/16	3 9/16	4⅝	5 13/16	9	11¼
0.160	1¾	2½	3 3/16	4¼	5 5/16	8 1/16	9 15/16
0.170	1 11/16	2⅜	3⅛	4	4 15/16	7⅜	9
0.180	1 9/16	2 3/16	2 15/16	3¾	4⅝	6 13/16	8 3/16
0.190	1 7/16	2 1/16	2¼	3 9/16	4⅜	6⅛	7 9/16
0.200	1⅜	2	2⅜	3⅜	4⅛	5 15/16	7 1/16
0.210	.....	1⅞	2½	3 3/16	3 15/16	5⅝	6⅝
0.220	.....	1 13/16	2⅜	3	3¾	5 3/16	6¼
0.230	.....	1 11/16	2¼	2⅞	3 9/16	5 1/16	5 15/16
0.240	.....	1⅝	2 9/16	2¾	3⅜	4 15/16	5⅝
0.250	.....	.....	2 1/16	2⅝	3¼	4⅝	5⅜
0.260	.....	.....	2	2⅜	3 1/16	4⅜	5⅛
0.270	.....	.....	1 15/16	2 3/16	3	4 1/16	4 15/16
0.280	.....	.....	1 11/16	2⅛	2⅞	4	4¾
0.290	.....	.....	1¾	2	2 15/16	3 15/16	4 1/16
0.300	.....	.....	1 11/16	2 1/16	2 11/16	3 11/16	4
0.310	.....	.....	.....	2	2⅝	3 9/16	3 15/16
0.320	.....	.....	.....	2	2½	3 3/16	3¾
0.330	.....	.....	.....	1 15/16	2 3/16	3	4
0.340	.....	.....	.....	1⅞	2⅛	3 1/16	3⅞
0.350	.....	.....	.....	1 11/16	2	2 15/16	3¾
0.360	.....	.....	.....	.....	2 1/16	2 13/16	3 9/16
0.370	.....	.....	.....	.....	1 15/16	2⅝	3⅜
0.380	.....	.....	.....	.....	1⅞	2 9/16	3 3/16
0.390	.....	.....	.....	.....	2 1/16	2 3/16	3 1/16
0.400	.....	.....	.....	.....	2	2⅛	2 15/16
0.410	.....	.....	.....	.....	1 15/16	2 1/16	2¾
0.420	.....	.....	.....	.....	.....	2	2 9/16
0.430	.....	.....	.....	.....	.....	1 15/16	2⅜
0.440	.....	.....	.....	.....	.....	2 3/16	3
0.450	.....	.....	.....	.....	.....	2⅛	2 15/16
0.460	.....	.....	.....	.....	.....	2 1/16	2⅞
0.470	.....	.....	.....	.....	.....	2	2 9/16
0.480	.....	.....	.....	.....	.....	1 15/16	2¼
0.490	.....	.....	.....	.....	.....	2 3/16	2 15/16
0.500	.....	.....	.....	.....	.....	2⅛	2⅞
0.510	.....	.....	.....	.....	.....	2 1/16	2 9/16
0.520	.....	.....	.....	.....	.....	.....	2½
0.530	.....	.....	.....	.....	.....	.....	2 3/16
0.540	.....	.....	.....	.....	.....	.....	2⅛
0.550	.....	.....	.....	.....	.....	.....	2 1/16
0.560	.....	.....	.....	.....	.....	.....	2

TABLE 3-8 VALUES OF L FOR PIPE SIZES ≥ NPS 36 AND < NPS 42

Depth, d, in	Wall Thickness, t, in							
	0.250	0.281	0.312	0.375	0.406	0.469	0.562	0.688
0.030	13 3/16	14 1/2	.....	.....	.....	.....	.....	.....
0.040	13 3/16	14 1/2	15	16 5/16	.....	.....	.....	.....
0.050	9	13 1/8	15	16 5/16	17 1/8	18 3/16	.....	.....
0.060	6 1/2	8 1/2	11 1/8	16 5/16	17 1/8	18 3/16	20 1/8	.....
0.070	4 15/16	6 5/16	7 1/8	13 1/2	17 1/8	18 3/16	20 1/8	22 9/16
0.080	4 1/8	5 5/16	6 1/2	9 1/2	11 7/8	18 3/16	20 1/8	22 9/16
0.090	3 5/16	4 1/8	5 1/2	7 1/8	9 5/16	13 11/16	20 1/8	22 9/16
0.100	3 5/16	3 7/8	4 1/8	6 5/16	7 1/8	10 1/8	18 15/16	22 9/16
0.110	2 7/8	3 7/16	4 1/8	5 1/8	6 5/16	8 7/8	14 1/2	22 9/16
0.120	2 7/8	3 1/8	3 1/2	5 1/16	5 15/16	7 11/16	11 7/8	22 9/16
0.130	2 7/16	2 7/8	3 7/16	4 5/16	5 1/2	6 15/16	9 15/16	17 9/16
0.140	2 1/2	2 15/16	3 1/8	4 1/2	4 15/16	6 5/16	8 1/2	14 9/16
0.150	2 7/16	2 1/2	2 15/16	3 15/16	4 7/16	5 15/16	7 1/8	12 9/16
0.160	1 15/16	2 9/16	2 9/16	3 5/8	4 1/8	5 1/2	7 5/16	10 15/16
0.170	1 15/16	2 9/16	2 9/16	3 7/16	3 7/8	4 7/8	6 5/8	9 15/16
0.180	1 11/16	2 9/16	2 9/16	3 1/2	3 5/8	4 9/16	6 9/16	9
0.190	1 5/8	1 15/16	2 9/16	3 9/16	3 7/16	4 9/16	5 15/16	8 9/16
0.200	1 1/2	1 15/16	2 9/16	2 7/8	3 1/2	4 9/16	5 7/16	7 1/2
0.210	.....	1 1/2	2 9/16	2 1/2	3 1/8	3 7/8	5 9/16	7 1/2
0.220	.....	1 3/8	1 15/16	2 1/8	2 15/16	3 15/16	4 7/8	6 7/8
0.230	.....	.....	1 7/8	2 1/2	2 15/16	3 1/2	4 15/16	6 1/2
0.240	.....	.....	1 3/4	2 1/8	2 15/16	3 1/8	4 7/16	6 1/16
0.250	.....	.....	.....	2 1/4	2 9/16	3 1/2	4 1/2	5 7/8
0.260	.....	.....	.....	2 1/16	2 1/2	3 1/16	4 1/8	5 5/8
0.270	.....	.....	.....	2 5/16	2 1/8	3	3 15/16	5 7/16
0.280	.....	.....	.....	2	2 1/16	2 7/8	3 15/16	5 1/16
0.290	.....	.....	.....	1 15/16	2 1/16	2 7/8	3 15/16	5
0.300	.....	.....	.....	1 7/8	2 1/8	2 15/16	3 1/2	4 15/16
0.310	.....	.....	.....	.....	2	2 15/16	3 1/16	4 15/16
0.320	.....	.....	.....	.....	1 15/16	2 7/8	3 1/16	4 1/2
0.330	.....	.....	.....	.....	.....	2 7/8	3 1/16	4 1/8
0.340	.....	.....	.....	.....	.....	2 7/8	3 1/16	4 1/8
0.350	.....	.....	.....	.....	.....	2 7/8	3	4 1/8
0.360	.....	.....	.....	.....	.....	2 7/8	2 15/16	4
0.370	.....	.....	.....	.....	.....	2 7/8	2 15/16	3 7/8
0.380	.....	.....	.....	.....	.....	.....	2 7/8	3 1/2
0.390	.....	.....	.....	.....	.....	.....	2 15/16	3 15/16
0.400	.....	.....	.....	.....	.....	.....	2 9/16	3 9/16
0.410	.....	.....	.....	.....	.....	.....	2 1/2	3 1/2
0.420	.....	.....	.....	.....	.....	.....	2 7/16	3 1/8
0.430	.....	.....	.....	.....	.....	.....	2 1/8	3 5/16
0.440	.....	.....	.....	.....	.....	.....	2 7/16	3 1/8
0.450	.....	.....	.....	.....	.....	.....	.....	3 1/16
0.460	.....	.....	.....	.....	.....	.....	.....	3 1/16
0.470	.....	.....	.....	.....	.....	.....	.....	3
0.480	.....	.....	.....	.....	.....	.....	.....	2 15/16
0.490	.....	.....	.....	.....	.....	.....	.....	2 7/8
0.500	.....	.....	.....	.....	.....	.....	.....	2 15/16
0.510	.....	.....	.....	.....	.....	.....	.....	2 1/2
0.520	.....	.....	.....	.....	.....	.....	.....	2 15/16
0.530	.....	.....	.....	.....	.....	.....	.....	2 7/8
0.540	.....	.....	.....	.....	.....	.....	.....	2 7/8
0.550	.....	.....	.....	.....	.....	.....	.....	2 7/8
0.560	.....	.....	.....	.....	.....	.....	.....	.....

TABLE 3-9 VALUES OF L FOR PIPE SIZES ≥ NPS 42 AND < NPS 48

Depth, d, in.	Wall Thickness, t, in. 0.344	0.406	0.438	0.469	0.500	0.562	0.625	0.688	0.750
0.030	.....	.....	.....	.....	.....	.....	.....	.....	.....
0.040	17	.....	.....	.....	.....	.....	.....	.....	.....
0.050	17	18½	19 3/16	19⅞	20½	.....	.....	.....	.....
0.060	17	18½	19 3/16	19⅞	20½	21¾	.....	.....	.....
0.070	10 15/16	18½	19 3/16	19⅞	20½	21¾	22 15/16	24 1/16	.....
0.080	8 5/16	12⅞	16 9/16	19⅞	20½	21¾	22 15/16	24 1/16	25⅛
0.090	6⅞	9⅞	12 1/16	14 13/16	18 9/16	21¾	22 15/16	24 1/16	25⅛
0.100	5 15/16	8 3/16	9¾	11½	13¾	20 7/16	22 15/16	24 1/16	25⅛
0.110	5¼	7 1/16	8¼	9 5/16	11⅛	15⅜	22 7/16	24 1/16	25⅛
0.120	4 11/16	6 5/16	7¼	8 5/16	9½	12 9/16	17 1/16	24 1/16	25⅛
0.130	4 5/16	5 11/16	6½	7⅜	8⅜	10¾	14	18¾	25⅛
0.140	4	5 3/16	5 15/16	6 11/16	7½	9½	12 1/16	15 7/16	20¼
0.150	3 11/16	4 13/16	5 7/16	6⅛	6 13/16	8½	10⅝	13 5/16	16 13/16
0.160	3 7/16	4 7/16	5 1/16	5⅝	6 5/16	7¾	9 9/16	11 13/16	14 9/16
0.170	3¼	4 1/16	4 11/16	5¼	5⅞	7 1/16	8¾	10⅝	12⅞
0.180	3 1/16	3 15/16	4 7/16	4 15/16	5½	6 11/16	8 1/16	9 11/16	11⅝
0.190	2⅞	3 11/16	4 3/16	4 11/16	5 1/16	6¼	7½	9	10 11/16
0.200	2¾	3½	3 15/16	4 7/16	4⅞	5⅞	7 1/16	8⅜	9¾
0.210	2 9/16	3⅜	3¾	4 1/16	4⅝	5 9/16	6⅞	7⅞	9 1/16
0.220	2 7/16	3 1/16	3 9/16	4	4⅜	5 3/16	6 5/16	7⅜	8⅝
0.230	2⅜	3 1/16	3 7/16	3 13/16	4 1/16	5 1/16	6	7	8⅛
0.240	2¼	2 15/16	3¼	3⅝	4	4 13/16	5 11/16	6 11/16	7¾
0.250	2⅛	2 13/16	3⅛	3½	3⅞	4⅝	5 5/16	6⅜	7⅜
0.260	2 1/16	2 11/16	3	3⅜	3 11/16	4 7/16	5¼	6 1/16	7
0.270	1 15/16	2 9/16	2⅞	3 1/16	3 9/16	4¼	5	5 13/16	6 11/16
0.280	.....	2 7/16	2 13/16	3⅛	3 7/16	4⅛	4 13/16	5⅝	6 7/16
0.290	.....	2⅜	2 11/16	3	3 5/16	3 15/16	4⅝	5⅜	6 1/16
0.300	.....	2¼	2 5/16	2⅞	3 1/16	3 13/16	4½	5 1/16	6
0.310	.....	2 3/16	2½	2¾	3 1/16	3 11/16	4 5/16	5 1/16	5¾
0.320	.....	2⅛	2⅜	2 13/16	2 15/16	3 5/16	4 1/16	4⅞	5 5/16
0.330	.....	.....	2 3/16	2 9/16	2⅞	3 1/16	4 1/16	4 11/16	5⅛
0.340	.....	.....	2¼	2½	2¾	3 3/16	3 15/16	4 5/16	5¼
0.350	.....	.....	2 1/16	2 3/16	2 11/16	3¼	3 13/16	4 1/16	5 1/16
0.360	.....	.....	.....	2 5/16	2⅝	3⅛	3 11/16	4 3/16	4 15/16
0.370	.....	.....	.....	2¼	2½	3 1/16	3⅝	4 1/16	4¾
0.380	.....	.....	.....	.....	2 7/16	2 15/16	3½	4 1/16	4⅝
0.390	.....	.....	.....	.....	2⅜	2⅞	3 3/16	3 15/16	4½
0.400	.....	.....	.....	.....	2 3/16	2 11/16	3 1/16	3⅞	4 7/16
0.410	.....	.....	.....	.....	.....	2⅜	3¼	3¾	4 5/16
0.420	.....	.....	.....	.....	.....	2⅛	3⅛	3 11/16	4 3/16
0.430	.....	.....	.....	.....	.....	2 9/16	3 1/16	3 9/16	4 1/16
0.440	.....	.....	.....	.....	.....	2½	3	3½	4
0.450	.....	.....	.....	.....	.....	.....	2 9/16	3⅜	3⅞
0.460	.....	.....	.....	.....	.....	.....	2 7/16	3 5/16	3 11/16
0.470	.....	.....	.....	.....	.....	.....	2¼	3¼	3¾
0.480	.....	.....	.....	.....	.....	.....	2 1/16	3 1/16	3⅝
0.490	.....	.....	.....	.....	.....	.....	2⅜	3⅛	3 5/16
0.500	.....	.....	.....	.....	.....	.....	2 5/16	3	3½
0.510	.....	.....	.....	.....	.....	.....	.....	2 15/16	3⅜
0.520	.....	.....	.....	.....	.....	.....	.....	2⅞	3 1/16

TABLE 3-9 VALUES OF L FOR PIPE SIZES ≥ NPS 42 AND < NPS 48

Wall Thickness, t, in.								Depth, d, in.
0.812	0.875	0.938	1.000	1.062	1.125	1.188	1.250	
.....	.....	.....	.....	.....	.....	.....	.....	0.030
.....	.....	.....	.....	.....	.....	.....	.....	0.040
.....	.....	.....	.....	.....	.....	.....	.....	0.050
.....	.....	.....	.....	.....	.....	.....	.....	0.060
.....	.....	.....	.....	.....	.....	.....	.....	0.070
.....	.....	.....	.....	.....	.....	.....	.....	0.080
26 3/16	27 9/16	.....	.....	.....	.....	.....	.....	0.090
26 3/16	27 9/16	28 1/8	.....	.....	.....	.....	.....	0.100
26 3/16	27 9/16	28 1/8	29 1/16	29 15/16	.....	.....	.....	0.110
26 3/16	27 9/16	28 1/8	29 1/16	29 15/16	30 13/16	31 5/8	.....	0.120
26 3/16	27 9/16	28 1/8	29 1/16	29 15/16	30 13/16	31 5/8	32 7/16	0.130
26 3/16	27 9/16	28 1/8	29 1/16	29 15/16	30 13/16	31 5/8	32 7/16	0.140
21 3/4	27 9/16	28 1/8	29 1/16	29 15/16	30 13/16	31 5/8	32 7/16	0.150
18 3/16	23 9/16	28 1/8	29 1/16	29 15/16	30 13/16	31 5/8	32 7/16	0.160
15 3/4	19 9/16	24 13/16	29 1/16	29 15/16	30 13/16	31 5/8	32 7/16	0.170
14	17	20 13/16	26 1/4	29 15/16	30 13/16	31 5/8	32 7/16	0.180
12 11/16	15 1/8	18 1/4	22 1/2	27 3/8	30 13/16	31 5/8	32 7/16	0.190
11 5/8	13 11/16	16 1/4	19 7/16	23 1/2	29 1/16	31 1/8	32 5/16	0.200
10 3/4	12 9/16	14 3/4	17 1/8	20 9/16	24 13/16	30 7/16	32 7/16	0.210
10	11 5/8	13 9/16	15 3/4	18 7/16	21 13/16	26 1/8	31 1/4	0.220
9 7/16	10 7/8	12 9/16	14 1/2	16 3/4	19 9/16	23	27 9/16	0.230
8 7/8	10 1/4	11 3/4	13 7/16	15 7/16	17 13/16	20 11/16	24 1/8	0.240
8 7/16	9 11/16	11 1/16	12 9/16	14 5/16	16 1/8	18 13/16	21 1/4	0.250
8	9 3/16	10 7/16	11 13/16	13 1/8	15 1/4	17 1/8	19 13/16	0.260
7 11/16	8 3/4	9 7/8	11 1/16	12 5/8	14 1/4	16 1/8	18 5/16	0.270
7 3/8	8 5/16	9 7/16	10 5/8	11 15/16	13 7/16	15 1/8	17	0.280
7 1/16	8	9	10 1/8	11 3/16	12 11/16	14 1/2	15 13/16	0.290
6 13/16	7 11/16	8 3/8	9 11/16	10 13/16	12 1/16	13 1/2	15 1/16	0.300
6 9/16	7 1/8	8 5/16	9 1/4	10 5/16	11 1/2	12 13/16	14 1/4	0.310
6 3/16	7 1/8	8	8 15/16	9 15/16	11	12 1/4	13 5/16	0.320
6 1/8	6 7/8	7 11/16	8 9/16	9 9/16	10 9/16	11 11/16	12 13/16	0.330
5 15/16	6 11/16	7 7/16	8 5/16	9 3/16	10 3/16	11 1/4	12 3/8	0.340
5 3/4	6 7/16	7 3/16	8	8 7/8	9 13/16	10 15/16	11 7/8	0.350
5 9/16	6 1/4	7	7 3/4	8 9/16	9 7/16	10 7/16	11 3/16	0.360
5 3/8	6 1/16	6 3/4	7 1/2	8 5/16	9 1/8	10 1/16	11	0.370
5 1/4	5 7/8	6 9/16	7 3/16	8 1/16	8 7/8	9 3/4	10 5/8	0.380
5 1/8	5 3/4	6 3/8	7 1/16	7 13/16	8 5/16	9 7/16	10 5/16	0.390
5	5 5/16	6 1/4	6 7/8	7 5/8	8 1/8	9 1/4	10	0.400
4 7/8	5 7/16	6 1/16	6 11/16	7 3/8	8 1/8	8 7/8	9 11/16	0.410
4 3/4	5 5/16	5 15/16	6 9/16	7 3/16	7 7/8	8 5/8	9 3/8	0.420
4 5/8	5 3/16	5 3/4	6 3/8	7	7 11/16	8 1/8	9 1/8	0.430
4 1/2	5 1/16	5 5/8	6 1/4	6 13/16	7 1/2	8 3/16	8 7/8	0.440
4 7/16	4 15/16	5 1/2	6 1/16	6 11/16	7 3/16	8	8 11/16	0.450
4 3/16	4 13/16	5 1/8	5 15/16	6 1/2	7 1/8	7 11/16	8 3/16	0.460
4 3/16	4 3/4	5 1/4	5 13/16	6 3/8	7	7 5/8	8 1/4	0.470
4 1/8	4 5/8	5 1/8	5 11/16	6 1/4	6 13/16	7 3/16	8 1/16	0.480
4	4 1/2	5 1/16	5 5/16	6 1/8	6 11/16	7 1/4	7 7/8	0.490
3 15/16	4 7/16	4 15/16	5 7/16	6	6 5/16	7 1/8	7 11/16	0.500
3 7/8	4 3/16	4 13/16	5 3/16	5 7/8	6 1/8	6 15/16	7 5/16	0.510
3 3/4	4 1/4	4 3/4	5 1/4	5 1/2	6 1/4	6 13/16	7 1/8	0.520

(table continues)

TABLE 3-9 VALUES OF *L* FOR PIPE SIZES ≥ NPS 42 AND < NPS 48 (CONT'D)

Depth, *d*, in.	Wall Thickness, *t*, in. 0.344	0.406	0.438	0.469	0.500	0.562	0.625	0.688	0.750
0.530	.....	.....	.....	.....	.....	.....	.....	2 13/16	3 1/4
0.540	.....	.....	.....	.....	.....	.....	.....	2 3/4	3 5/16
0.550	.....	.....	.....	.....	.....	.....	.....	2 11/16	3 1/8
0.560	.....	.....	.....	.....	.....	.....	.....	.....	3 5/16
0.570	.....	.....	.....	.....	.....	.....	.....	.....	3
0.580	.....	.....	.....	.....	.....	.....	.....	.....	2 15/16
0.590	.....	.....	.....	.....	.....	.....	.....	.....	2 7/8
0.600	.....	.....	.....	.....	.....	.....	.....	.....	2 13/16
0.610	.....	.....	.....	.....	.....	.....	.....	.....	.....
0.620	.....	.....	.....	.....	.....	.....	.....	.....	.....
0.630	.....	.....	.....	.....	.....	.....	.....	.....	.....
0.640	.....	.....	.....	.....	.....	.....	.....	.....	.....
0.650	.....	.....	.....	.....	.....	.....	.....	.....	.....
0.660	.....	.....	.....	.....	.....	.....	.....	.....	.....
0.670	.....	.....	.....	.....	.....	.....	.....	.....	.....
0.680	.....	.....	.....	.....	.....	.....	.....	.....	.....
0.690	.....	.....	.....	.....	.....	.....	.....	.....	.....
0.700	.....	.....	.....	.....	.....	.....	.....	.....	.....
0.710	.....	.....	.....	.....	.....	.....	.....	.....	.....
0.720	.....	.....	.....	.....	.....	.....	.....	.....	.....
0.730	.....	.....	.....	.....	.....	.....	.....	.....	.....
0.740	.....	.....	.....	.....	.....	.....	.....	.....	.....
0.750	.....	.....	.....	.....	.....	.....	.....	.....	.....
0.760	.....	.....	.....	.....	.....	.....	.....	.....	.....
0.770	.....	.....	.....	.....	.....	.....	.....	.....	.....
0.780	.....	.....	.....	.....	.....	.....	.....	.....	.....
0.790	.....	.....	.....	.....	.....	.....	.....	.....	.....
0.800	.....	.....	.....	.....	.....	.....	.....	.....	.....
0.810	.....	.....	.....	.....	.....	.....	.....	.....	.....
0.820	.....	.....	.....	.....	.....	.....	.....	.....	.....
0.830	.....	.....	.....	.....	.....	.....	.....	.....	.....
0.840	.....	.....	.....	.....	.....	.....	.....	.....	.....
0.850	.....	.....	.....	.....	.....	.....	.....	.....	.....
0.860	.....	.....	.....	.....	.....	.....	.....	.....	.....
0.870	.....	.....	.....	.....	.....	.....	.....	.....	.....
0.880	.....	.....	.....	.....	.....	.....	.....	.....	.....
0.890	.....	.....	.....	.....	.....	.....	.....	.....	.....
0.900	.....	.....	.....	.....	.....	.....	.....	.....	.....
0.910	.....	.....	.....	.....	.....	.....	.....	.....	.....
0.920	.....	.....	.....	.....	.....	.....	.....	.....	.....
0.930	.....	.....	.....	.....	.....	.....	.....	.....	.....
0.940	.....	.....	.....	.....	.....	.....	.....	.....	.....
0.950	.....	.....	.....	.....	.....	.....	.....	.....	.....
0.960	.....	.....	.....	.....	.....	.....	.....	.....	.....
0.970	.....	.....	.....	.....	.....	.....	.....	.....	.....
0.980	.....	.....	.....	.....	.....	.....	.....	.....	.....
0.990	.....	.....	.....	.....	.....	.....	.....	.....	.....
1.000	.....	.....	.....	.....	.....	.....	.....	.....	.....
1.010	.....	.....	.....	.....	.....	.....	.....	.....	.....

TABLE 3-9 VALUES OF *L* FOR PIPE SIZES ≥ NPS 42 AND < NPS 48 (CONT'D)

Wall Thickness, *t*, in.								Depth, *d*, in.
0.812	0.875	0.938	1.000	1.062	1.125	1.188	1.250	
3 11/16	4 1/16	4 5/8	5 1/8	5 5/8	6 1/8	6 11/16	7 1/4	0.530
3 5/8	4 7/16	4 9/16	5	5 1/2	6	6 9/16	7 1/8	0.540
3 9/16	4	4 7/16	4 15/16	5 7/16	5 15/16	6 7/16	6 15/16	0.550
3 1/2	3 15/16	4 3/8	4 13/16	5 5/16	5 13/16	6 5/16	6 13/16	0.560
3 7/16	3 7/8	4 3/16	4 3/4	5 3/16	5 11/16	6 3/16	6 11/16	0.570
3 3/8	3 3/4	4 1/4	4 11/16	5 1/8	5 9/16	6 1/16	6 9/16	0.580
3 5/16	3 11/16	4 1/8	4 9/16	5	5 1/2	6	6 7/16	0.590
3 1/4	3 5/8	4 1/16	4 1/2	4 15/16	5 3/8	5 7/8	6 3/8	0.600
3 3/16	3 9/16	4	4 7/16	4 7/8	5 5/16	5 3/4	6 1/4	0.610
3 1/8	3 1/2	3 15/16	4 3/8	4 3/4	5 3/16	5 11/16	6 1/8	0.620
3 1/16	3 7/16	3 7/8	4 1/4	4 11/16	5 1/8	5 5/16	6 1/16	0.630
3	3 3/8	3 13/16	4 3/16	4 5/8	5 1/16	5 1/2	5 15/16	0.640
.....	3 5/16	3 3/4	4 1/8	4 9/16	4 15/16	5 3/8	5 13/16	0.650
.....	3 1/4	3 11/16	4 1/16	4 7/16	4 7/8	5 3/16	5 3/4	0.660
.....	3 3/16	3 5/8	4	4 3/8	4 13/16	5 1/4	5 11/16	0.670
.....	3 1/8	3 9/16	3 15/16	4 5/16	4 3/4	5 1/8	5 9/16	0.680
.....	3 1/8	3 1/2	3 7/8	4 1/4	4 11/16	5 1/16	5 1/2	0.690
.....	3 1/16	3 7/16	3 13/16	4 3/16	4 9/16	5	5 7/16	0.700
.....	.....	3 3/8	3 3/4	4 1/8	4 1/2	4 15/16	5 3/16	0.710
.....	.....	3 5/16	3 11/16	4 1/16	4 7/16	4 7/8	5 1/4	0.720
.....	.....	3 1/4	3 5/8	4	4 3/8	4 3/4	5 3/16	0.730
.....	.....	3 3/16	3 9/16	3 15/16	4 5/16	4 11/16	5 1/8	0.740
.....	.....	3 1/8	3 1/2	3 7/8	4 1/4	4 5/8	5	0.750
.....	.....	.....	3 7/16	3 13/16	4 3/16	4 9/16	4 15/16	0.760
.....	.....	.....	3 7/16	3 3/4	4 1/8	4 1/2	4 7/8	0.770
.....	.....	.....	3 3/8	3 11/16	4 1/16	4 7/16	4 13/16	0.780
.....	.....	.....	3 5/16	3 11/16	4	4 3/8	4 3/4	0.790
.....	.....	.....	3 1/4	3 5/8	3 15/16	4 5/16	4 11/16	0.800
.....	.....	.....	.....	3 9/16	3 15/16	4 1/4	4 5/8	0.810
.....	.....	.....	.....	3 1/2	3 7/8	4 3/16	4 9/16	0.820
.....	.....	.....	.....	3 7/16	3 13/16	4 1/8	4 1/2	0.830
.....	.....	.....	.....	3 3/8	3 3/4	4 1/8	4 7/16	0.840
.....	.....	.....	.....	.....	3 11/16	4 1/16	4 3/8	0.850
.....	.....	.....	.....	.....	3 5/8	4	4 5/16	0.860
.....	.....	.....	.....	.....	3 5/8	3 15/16	4 1/4	0.870
.....	.....	.....	.....	.....	3 9/16	3 7/8	4 1/4	0.880
.....	.....	.....	.....	.....	3 1/2	3 13/16	4 3/16	0.890
.....	.....	.....	.....	.....	3 7/16	3 13/16	4 1/8	0.900
.....	.....	.....	.....	.....	.....	3 3/4	4 1/16	0.910
.....	.....	.....	.....	.....	.....	3 11/16	4	0.920
.....	.....	.....	.....	.....	.....	3 5/8	3 15/16	0.930
.....	.....	.....	.....	.....	.....	3 5/8	3 15/16	0.940
.....	.....	.....	.....	.....	.....	3 9/16	3 7/8	0.950
.....	.....	.....	.....	.....	.....	.....	3 13/16	0.960
.....	.....	.....	.....	.....	.....	.....	3 3/4	0.970
.....	.....	.....	.....	.....	.....	.....	3 3/4	0.980
.....	.....	.....	.....	.....	.....	.....	3 11/16	0.990
.....	.....	.....	.....	.....	.....	.....	3 5/8	1.000
.....	.....	.....	.....	.....	.....	.....	.....	1.010

TABLE 3-10 VALUES OF *L* FOR PIPE SIZES ≥ NPS 48 AND < NPS 52

Depth, *d*, in.	Wall Thickness, *t*, in. 0.344	0.406	0.438	0.469	0.500	0.562	0.625	0.688	0.750
0.030	.....	.....	.....	.....	.....	.....	.....	.....	.....
0.040	18 3/16	.....	.....	.....	.....	.....	.....	.....	.....
0.050	18 3/16	19 3/4	20 9/16	21 1/4	21 15/16	.....	.....	.....	.....
0.060	18 3/16	19 3/4	20 9/16	21 1/4	21 15/16	23 1/4	.....	.....	.....
0.070	11 11/16	19 3/4	20 9/16	21 1/4	21 15/16	23 1/4	24 9/16	25 3/4	.....
0.080	8 15/16	13 3/4	17 11/16	21 1/4	21 15/16	23 1/4	24 9/16	25 3/4	26 7/8
0.090	7 3/8	10 9/16	12 7/8	15 13/16	19 13/16	23 1/4	24 9/16	25 3/4	26 7/8
0.100	6 5/16	8 3/4	10 3/8	12 5/16	14 11/16	21 7/8	24 9/16	25 3/4	26 7/8
0.110	5 5/8	7 9/16	8 13/16	10 1/4	11 15/16	16 7/16	24	25 3/4	26 7/8
0.120	5 1/16	6 3/4	7 3/4	8 7/8	10 3/16	13 7/16	18 1/4	25 3/4	26 7/8
0.130	4 5/8	6 1/16	6 15/16	7 7/8	8 15/16	11 1/2	15	20	26 7/8
0.140	4 1/4	5 9/16	6 5/16	7 1/8	8	10 1/8	12 7/8	16 1/2	21 5/8
0.150	3 15/16	5 1/8	5 13/16	6 9/16	7 3/16	9 1/8	11 3/8	14 1/4	18
0.160	3 11/16	4 3/4	5 3/8	6 1/16	6 3/4	8 5/16	10 1/4	12 5/8	15 9/16
0.170	3 7/16	4 1/2	5 1/16	5 5/8	6 1/4	7 11/16	9 3/8	11 5/8	13 13/16
0.180	3 1/4	4 1/16	4 3/4	5 3/16	5 7/8	7 1/8	8 5/8	10 1/8	12 7/16
0.190	3 1/16	4	4 1/2	5	5 1/2	6 11/16	8 1/16	9 5/8	11 3/8
0.200	2 15/16	3 3/4	4 1/4	4 11/16	5 3/16	6 5/16	7 9/16	8 13/16	10 9/16
0.210	2 3/4	3 9/16	4	4 1/2	4 15/16	5 15/16	7 1/8	8 3/8	9 13/16
0.220	2 5/8	3 7/16	3 13/16	4 1/4	4 11/16	5 11/16	6 3/4	7 15/16	9 1/4
0.230	2 1/2	3 1/4	3 11/16	4 1/16	4 1/2	5 3/8	6 3/8	7 1/2	8 11/16
0.240	2 3/8	3 1/8	3 1/2	3 7/8	4 5/16	5 1/8	6 1/8	7 1/8	8 1/4
0.250	2 5/16	3	3 3/8	3 3/4	4 1/8	4 15/16	5 13/16	6 11/16	7 3/8
0.260	2 3/16	2 7/8	3 1/4	3 9/16	3 15/16	4 3/4	5 5/16	6 1/2	7 1/2
0.270	2 1/16	2 3/4	3 1/16	3 3/8	3 11/16	4 5/16	5 1/8	6 1/16	7 1/16
0.280	.....	2 5/8	3	3 5/16	3 11/16	4 1/8	5 1/16	6	6 7/8
0.290	.....	2 9/16	2 7/8	3 1/16	3 1/2	4 1/16	5	5 9/16	6 5/8
0.300	.....	2 7/16	2 3/4	3 1/16	3 3/8	4 1/16	4 15/16	5 5/16	6 1/8
0.310	.....	2 3/8	2 11/16	2 15/16	3 3/16	3 15/16	4 5/8	5 1/8	6 1/16
0.320	.....	2 1/4	2 9/16	2 7/8	3 1/16	3 15/16	4 1/2	5 1/16	5 15/16
0.330	.....	.....	2 1/2	2 3/4	3 1/16	3 11/16	4 3/8	5 1/16	5 3/4
0.340	.....	.....	2 3/8	2 11/16	3	3 9/16	4 3/16	4 7/8	5 9/16
0.350	.....	.....	2 5/16	2 5/8	2 7/8	3 7/16	4 1/16	4 3/4	5 7/16
0.360	.....	.....	.....	2 1/2	2 13/16	3 3/8	4	4 5/8	5 1/4
0.370	.....	.....	.....	2 3/16	2 11/16	3 1/8	3 7/8	4 1/2	5 1/8
0.380	.....	.....	.....	.....	2 5/8	3 5/16	3 3/4	4 3/8	5
0.390	.....	.....	.....	.....	2 9/16	3 1/16	3 5/8	4 1/4	4 11/16
0.400	.....	.....	.....	.....	2 7/16	3	3 9/16	4 1/8	4 11/16
0.410	.....	.....	.....	.....	.....	2 15/16	3 7/16	4	4 9/16
0.420	.....	.....	.....	.....	.....	2 11/16	3 1/8	3 15/16	4 1/2
0.430	.....	.....	.....	.....	.....	2 1/4	3 1/4	3 11/16	4 3/8
0.440	.....	.....	.....	.....	.....	2 11/16	3 5/16	3 3/4	4 1/4
0.450	.....	.....	.....	.....	.....	.....	3 1/8	3 5/8	4 5/16
0.460	.....	.....	.....	.....	.....	.....	3 1/16	3 7/16	4 1/16
0.470	.....	.....	.....	.....	.....	.....	2 13/16	3 7/16	4
0.480	.....	.....	.....	.....	.....	.....	2 7/8	3 3/8	3 7/8
0.490	.....	.....	.....	.....	.....	.....	2 11/16	3 5/16	3 11/16
0.500	.....	.....	.....	.....	.....	.....	2 1/2	3 1/4	3 11/16
0.510	.....	.....	.....	.....	.....	.....	.....	3 1/16	3 5/8
0.520	.....	.....	.....	.....	.....	.....	.....	3 1/16	3 9/16

TABLE 3-10 VALUES OF L FOR PIPE SIZES ≥ NPS 48 AND < NPS 52

Wall Thickness, t, in.								Depth d, in.
0.812	0.875	0.938	1.000	1.062	1.125	1.188	1.250	
.....	.....	.....	.....	.....	.....	.....	.....	0.030
.....	.....	.....	.....	.....	.....	.....	.....	0.040
.....	.....	.....	.....	.....	.....	.....	.....	0.050
.....	.....	.....	.....	.....	.....	.....	.....	0.060
.....	.....	.....	.....	.....	.....	.....	.....	0.070
.....	.....	.....	.....	.....	.....	.....	.....	0.080
28	29 5/16	.....	.....	.....	.....	.....	.....	0.090
28	29 5/16	30 1/16	.....	.....	.....	.....	.....	0.100
28	29 5/16	30 5/16	31 1/16	32	.....	.....	.....	0.110
28	29 5/16	30 5/16	31 1/16	32	32 15/16	33 13/16	.....	0.120
28	29 5/16	30 5/16	31 1/16	32	32 15/16	33 13/16	34 11/16	0.130
28	29 5/16	30 5/16	31 1/16	32	32 15/16	33 13/16	34 11/16	0.140
23 1/4	29 5/16	30 5/16	31 1/16	32	32 15/16	33 13/16	34 11/16	0.150
19 7/16	24 15/16	30 5/16	31 1/16	32	32 15/16	33 13/16	34 11/16	0.160
16 13/16	20 15/16	26 9/16	31 1/16	32	32 15/16	33 13/16	34 11/16	0.170
14 15/16	18 9/16	22 3/8	28 1/16	32	32 15/16	33 13/16	34 11/16	0.180
13 9/16	16 9/16	19 1/2	23 3/4	29 1/2	32 15/16	33 13/16	34 11/16	0.190
12 3/8	14 11/16	17 3/8	20 3/4	25 1/8	31 1/16	33 13/16	34 11/16	0.200
11 1/2	13 7/16	15 3/4	18 9/16	22	26 1/2	32 9/16	34 11/16	0.210
10 3/4	12 7/16	14 1/2	16 7/8	19 11/16	23 3/16	27 13/16	33 15/16	0.220
10 1/16	11 5/8	13 7/16	15 1/2	17 13/16	20 15/16	24 9/16	29 1/16	0.230
9 1/2	10 15/16	12 9/16	14 1/8	16 1/2	19 3/16	22 1/8	25 13/16	0.240
9	10 3/16	11 13/16	13 7/16	15 5/16	17 1/2	20 1/8	23 1/4	0.250
8 5/16	9 13/16	11 1/8	12 5/8	14 5/16	16 5/16	18 9/16	21 3/16	0.260
8 1/16	9 5/16	10 9/16	11 13/16	13 1/2	15 1/4	17 1/4	19 5/16	0.270
7 7/8	8 15/16	10 1/16	11 3/8	12 3/4	14 1/8	16 3/16	18 1/16	0.280
7 5/16	8 5/16	9 3/8	10 13/16	12 1/8	13 5/16	15 1/4	17 1/16	0.290
7 1/4	8 1/16	9 1/4	10 3/8	11 5/16	12 13/16	14 7/16	16 1/16	0.300
7	7 7/8	8 7/8	9 15/16	11 1/16	12 5/16	13 11/16	15 1/4	0.310
6 3/4	7 5/8	8 9/16	9 9/16	10 7/8	11 13/16	13 1/16	14 1/2	0.320
6 1/2	7 3/8	8 1/4	9 1/16	10 3/16	11 5/16	12 1/2	13 13/16	0.330
6 5/16	7 1/8	7 15/16	8 7/8	9 13/16	10 7/8	12	13 1/4	0.340
6 1/8	6 7/8	7 11/16	8 5/16	9 1/2	10 1/2	11 5/16	12 5/16	0.350
5 15/16	6 11/16	7 1/2	8 1/16	9 1/16	10 1/8	11 1/8	12 1/16	0.360
5 3/4	6 1/2	7 1/4	8 1/16	8 7/8	9 3/4	10 3/4	11 3/4	0.370
5 5/8	6 5/16	7 1/16	7 13/16	8 3/8	9 1/2	10 1/8	11 3/8	0.380
5 1/2	6 1/8	6 7/8	7 5/16	8 1/8	9 5/16	10 5/16	11	0.390
5 5/16	6	6 11/16	7 1/8	8 1/8	8 15/16	9 3/4	10 11/16	0.400
5 1/16	5 13/16	6 1/2	7 1/16	7 7/8	8 11/16	9 1/2	10 5/16	0.410
5 1/16	5 11/16	6 5/16	7	7 11/16	8 7/16	9 1/4	10 1/16	0.420
4 15/16	5 5/16	6 1/16	6 13/16	7 1/2	8 1/4	9	9 3/4	0.430
4 13/16	5 1/16	6	6 5/8	7 3/16	8	8 3/4	9 1/2	0.440
4 11/16	5 1/16	5 7/8	6 1/2	7 1/8	7 13/16	8 5/16	9 1/4	0.450
4 5/8	5 1/16	5 3/4	6 3/8	7	7 5/8	8 3/16	9 1/16	0.460
4 1/2	5 1/16	5 5/8	6 3/16	6 13/16	7 3/16	8 1/8	8 13/16	0.470
4 3/8	4 15/16	5 1/2	6 1/16	6 11/16	7 5/16	7 15/16	8 5/8	0.480
4 3/16	4 13/16	5 3/8	5 15/16	6 1/2	7 1/8	7 3/4	8 3/16	0.490
4 1/16	4 3/4	5 1/4	5 13/16	6 3/8	7	7 5/8	8 1/4	0.500
4 1/8	4 5/8	5 3/16	5 11/16	6 1/4	6 13/16	7 3/16	8 1/16	0.510
4 1/16	4 9/16	5 1/16	5 9/16	6 1/8	6 11/16	7 5/16	7 7/8	0.520

(table continues)

TABLE 3-10 VALUES OF L FOR PIPE SIZES ≥ NPS 48 AND < NPS 52 (CONT'D)

Depth, d, in.	Wall Thickness, t, in. 0.344	0.406	0.438	0.469	0.500	0.562	0.625	0.688	0.750
0.530	.....	.....	.....	.....	.....	.....	.....	3	3½
0.540	.....	.....	.....	.....	.....	.....	.....	2 15/16	3 7/16
0.550	.....	.....	.....	.....	.....	.....	.....	2⅞	3 3/16
0.560	.....	.....	.....	.....	.....	.....	.....	.....	3¼
0.570	.....	.....	.....	.....	.....	.....	.....	.....	3 1/16
0.580	.....	.....	.....	.....	.....	.....	.....	.....	3⅛
0.590	.....	.....	.....	.....	.....	.....	.....	.....	3 1/16
0.600	.....	.....	.....	.....	.....	.....	.....	.....	3
0.610	.....	.....	.....	.....	.....	.....	.....	.....	.....
0.620	.....	.....	.....	.....	.....	.....	.....	.....	.....
0.630	.....	.....	.....	.....	.....	.....	.....	.....	.....
0.640	.....	.....	.....	.....	.....	.....	.....	.....	.....
0.650	.....	.....	.....	.....	.....	.....	.....	.....	.....
0.660	.....	.....	.....	.....	.....	.....	.....	.....	.....
0.670	.....	.....	.....	.....	.....	.....	.....	.....	.....
0.680	.....	.....	.....	.....	.....	.....	.....	.....	.....
0.690	.....	.....	.....	.....	.....	.....	.....	.....	.....
0.700	.....	.....	.....	.....	.....	.....	.....	.....	.....
0.710	.....	.....	.....	.....	.....	.....	.....	.....	.....
0.720	.....	.....	.....	.....	.....	.....	.....	.....	.....
0.730	.....	.....	.....	.....	.....	.....	.....	.....	.....
0.740	.....	.....	.....	.....	.....	.....	.....	.....	.....
0.750	.....	.....	.....	.....	.....	.....	.....	.....	.....
0.760	.....	.....	.....	.....	.....	.....	.....	.....	.....
0.770	.....	.....	.....	.....	.....	.....	.....	.....	.....
0.780	.....	.....	.....	.....	.....	.....	.....	.....	.....
0.790	.....	.....	.....	.....	.....	.....	.....	.....	.....
0.800	.....	.....	.....	.....	.....	.....	.....	.....	.....
0.810	.....	.....	.....	.....	.....	.....	.....	.....	.....
0.820	.....	.....	.....	.....	.....	.....	.....	.....	.....
0.830	.....	.....	.....	.....	.....	.....	.....	.....	.....
0.840	.....	.....	.....	.....	.....	.....	.....	.....	.....
0.850	.....	.....	.....	.....	.....	.....	.....	.....	.....

TABLE 3-10 VALUES OF L FOR PIPE SIZES ≥ NPS 48 AND < NPS 52 (CONT'D)

Wall Thickness, t, in.								Depth, d, in.
0.812	0.875	0.938	1.000	1.062	1.125	1.188	1.250	
3 15/16	4 7/16	4 15/16	5 1/2	6	6 9/16	7 1/8	7 3/4	0.530
3 7/8	4 3/8	4 7/8	5 3/8	5 7/8	6 7/16	7	7 9/16	0.540
3 13/16	4 1/4	4 3/4	5 1/4	5 13/16	6 3/16	6 7/8	7 5/16	0.550
3 3/4	4 3/16	4 11/16	5 3/16	5 11/16	6 3/16	6 3/4	7 3/16	0.560
3 5/8	4 1/8	4 5/8	5 1/16	5 5/16	6 1/16	6 5/8	7 1/16	0.570
3 9/16	4 1/16	4 1/2	5	5 1/2	6	6 1/2	7 1/16	0.580
3 1/2	3 15/16	4 7/16	4 7/8	5 3/8	5 7/8	6 3/8	6 13/16	0.590
3 7/16	3 7/8	4 3/8	4 13/16	5 1/4	5 3/4	6 1/4	6 13/16	0.600
3 3/8	3 13/16	4 1/4	4 3/4	5 3/16	5 11/16	6 3/16	6 11/16	0.610
3 5/16	3 3/4	4 3/16	4 5/8	5 1/8	5 9/16	6 1/16	6 9/16	0.620
3 1/4	3 11/16	4 1/8	4 9/16	5	5 1/2	5 15/16	6 7/16	0.630
3 3/16	3 5/8	4 1/16	4 1/2	4 15/16	5 3/8	5 7/8	6 3/8	0.640
.....	3 9/16	4	4 7/16	4 7/8	5 5/16	5 3/4	6 1/4	0.650
.....	3 1/2	3 15/16	4 3/16	4 3/4	5 1/4	5 11/16	6 1/8	0.660
.....	3 7/16	3 7/8	4 1/4	4 11/16	5 1/8	5 5/8	6 1/16	0.670
.....	3 3/8	3 13/16	4 3/16	4 5/8	.....	.....	.....	0.680
.....	3 5/16	3 3/4	4 1/8	4 9/16	.....	.....	.....	0.690
.....	3 1/4	3 11/16	4 1/16	4 1/2	.....	.....	.....	0.700
.....	.....	3 5/8	4	4 7/16	.....	.....	.....	0.710
.....	.....	3 9/16	3 15/16	4 3/16	.....	.....	.....	0.720
.....	.....	3 1/2	3 7/8	4 1/4	.....	.....	.....	0.730
.....	.....	3 7/16	3 13/16	4 1/16	.....	.....	.....	0.740
.....	.....	3 3/8	3 3/4	4 1/8	.....	.....	.....	0.750
.....	.....	.....	3 11/16	4 1/16	.....	.....	.....	0.760
.....	.....	.....	3 5/8	4	.....	.....	.....	0.770
.....	.....	.....	3 9/16	3 15/16	.....	.....	.....	0.780
.....	.....	.....	3 9/16	3 15/16	.....	.....	.....	0.790
.....	.....	.....	3 1/2	3 7/8	.....	.....	.....	0.800
.....	.....	.....	.....	3 13/16	.....	.....	.....	0.810
.....	.....	.....	.....	3 3/4	.....	.....	.....	0.820
.....	.....	.....	.....	3 11/16	.....	.....	.....	0.830
.....	.....	.....	.....	3 5/8	.....	.....	.....	0.840
.....	.....	.....	.....	.....	.....	.....	.....	0.850

TABLE 3-11 VALUES OF *L* FOR PIPE SIZES ≥ NPS 52 AND < NPS 56

Depth, *d*, in.	Wall Thickness, *t*, in. 0.406	0.438	0.469	0.500	0.562	0.625	0.688	0.750
0.040	.....	.....	.....	.....	.....	.....	.....	.....
0.050	20 9/16	21 3/8	22 1/8	22 13/16	.....	.....	.....	.....
0.060	20 9/16	21 3/8	22 1/8	22 13/16	24 3/16	.....	.....	.....
0.070	20 9/16	21 3/8	22 1/8	22 13/16	24 3/16	25 9/16	26 13/16	.....
0.080	14 5/16	18 7/16	22 1/8	22 13/16	24 3/16	25 9/16	26 13/16	28
0.090	11	13 7/16	16 1/2	20 5/8	24 3/16	25 9/16	26 13/16	28
0.100	9 1/8	10 13/16	12 13/16	15 5/16	22 3/4	25 9/16	26 13/16	28
0.110	7 7/8	9 3/16	10 13/16	12 3/8	17 1/8	25	26 13/16	28
0.120	7	8 1/16	9 1/4	10 9/16	14	19	26 13/16	28
0.130	6 5/16	7 1/4	8 3/16	9 3/16	11 15/16	15 5/8	20 13/16	28
0.140	5 3/4	6 9/16	7 7/16	8 1/8	10 9/16	13 1/8	17 3/16	22 9/16
0.150	5 5/16	6 1/16	6 13/16	7 3/8	9 1/2	11 13/16	14 13/16	18 3/4
0.160	5	5 5/8	6 3/16	7	8 11/16	10 5/8	13 1/8	16 3/16
0.170	4 5/8	5 1/4	5 7/8	6 1/2	8	9 3/4	11 13/16	14 3/8
0.180	4 3/8	4 15/16	5 1/2	6 1/8	7 5/16	9	10 13/16	12 15/16
0.190	4 1/8	4 5/8	5 3/16	5 3/4	6 15/16	8 3/8	10	11 7/8
0.200	3 15/16	4 7/16	4 7/8	5 7/16	6 9/16	7 7/8	9 3/16	11
0.210	3 3/4	4 3/16	4 11/16	5 1/8	6 3/16	7 3/8	8 3/4	10 1/4
0.220	3 9/16	4	4 7/16	4 7/8	5 7/8	7	8 1/4	9 5/8
0.230	3 3/8	3 13/16	4 1/4	4 11/16	5 5/8	6 5/8	7 13/16	9 1/16
0.240	3 1/4	3 5/8	4 1/16	4 1/2	5 3/8	6 3/8	7 5/16	8 9/16
0.250	3 1/8	3 1/2	3 7/8	4 5/16	5 1/8	6 1/16	7 1/16	8 1/16
0.260	3	3 3/8	3 3/4	4 1/8	4 15/16	5 13/16	6 3/4	7 13/16
0.270	2 7/8	3 1/4	3 5/16	3 15/16	4 3/4	5 5/16	6 1/2	7 1/2
0.280	2 3/4	3 1/8	3 1/16	3 13/16	4 5/16	5 1/8	6 1/16	7 3/16
0.290	2 5/8	3	3 5/16	3 5/16	4 1/8	5 1/16	6	6 7/8
0.300	2 5/16	2 7/8	3 1/16	3 5/16	4 1/16	5	5 13/16	6 5/8
0.310	2 5/16	2 3/4	3 1/16	3 1/16	4 1/8	4 15/16	5 5/8	6 7/16
0.320	2 1/8	2 15/16	3	3 1/16	3 15/16	4 13/16	5 5/16	6 3/16
0.330	.....	2 5/16	2 7/8	3 1/16	3 15/16	4	5 1/16	6
0.340	.....	2 1/16	2 13/16	3 1/16	3 1/16	4 1/16	5 1/16	5 13/16
0.350	.....	2 1/8	2 11/16	3	3 1/16	4 1/16	4 15/16	5 5/8
0.360	.....	.....	2 5/8	2 7/8	3	4 1/8	4 13/16	5 1/2
0.370	.....	.....	2 1/2	2 11/16	3 1/16	4	4 15/16	5 5/16
0.380	.....	.....	.....	2 1/2	3 1/16	3 7/8	4 1/16	5 1/16
0.390	.....	.....	.....	2 3/8	3 1/16	3 15/16	4 1/16	5 1/16
0.400	.....	.....	.....	2 5/16	3 1/8	3 15/16	4 1/16	4 7/8
0.410	.....	.....	.....	.....	3	3 15/16	4 1/16	4 3/4
0.420	.....	.....	.....	.....	2 13/16	3 15/16	4 1/16	4 11/16
0.430	.....	.....	.....	.....	2 7/8	3 15/16	4	4 5/16
0.440	.....	.....	.....	.....	2 13/16	3 15/16	3 7/8	4 1/16
0.450	.....	.....	.....	.....	.....	3 15/16	3 13/16	4 3/16
0.460	.....	.....	.....	.....	.....	3 15/16	3 13/16	4 1/8
0.470	.....	.....	.....	.....	.....	3 15/16	3 7/8	4 1/8
0.480	.....	.....	.....	.....	.....	3	3 15/16	4 1/16
0.490	.....	.....	.....	.....	.....	2 15/16	3 15/16	3 15/16
0.500	.....	.....	.....	.....	.....	2 7/8	3 7/8	3 7/8
0.510	.....	.....	.....	.....	.....	.....	3 13/16	3 13/16
0.520	.....	.....	.....	.....	.....	.....	3 13/16	3 13/16
0.530	.....	.....	.....	.....	.....	.....	3 15/16	3 7/8

TABLE 3-11 VALUES OF *L* FOR PIPE SIZES ≥ NPS 52 AND < NPS 56

Wall Thickness, *t*, in.								Depth, *d*, in.
0.812	0.875	0.938	1.000	1.062	1.125	1.188	1.250	
.....	.....	.....	.....	.....	.....	.....	.....	0.040
.....	.....	.....	.....	.....	.....	.....	.....	0.050
.....	.....	.....	.....	.....	.....	.....	.....	0.060
.....	.....	.....	.....	.....	.....	.....	.....	0.070
.....	.....	.....	.....	.....	.....	.....	.....	0.080
29 1/8	30 1/4	.....	.....	.....	.....	.....	.....	0.090
29 1/8	30 1/4	31 5/16	.....	.....	.....	.....	.....	0.100
29 1/8	30 1/4	31 5/16	32 5/16	33 5/16	.....	.....	.....	0.110
29 1/8	30 1/4	31 5/16	32 5/16	33 5/16	34 1/4	35 5/16	.....	0.120
29 1/8	30 1/4	31 5/16	32 5/16	33 5/16	34 1/4	35 5/16	36 1/8	0.130
29 1/8	30 1/4	31 5/16	32 5/16	33 5/16	34 1/4	35 5/16	36 1/8	0.140
24 3/16	30 1/4	31 5/16	32 5/16	33 5/16	34 1/4	35 5/16	36 1/8	0.150
20 5/16	25 15/16	31 5/16	32 5/16	33 5/16	34 1/4	35 5/16	36 1/8	0.160
17 1/2	21 3/4	27 5/8	32 5/16	33 5/16	34 1/4	35 5/16	36 1/8	0.170
15 5/16	18 15/16	23 5/16	29 3/16	33 5/16	34 1/4	35 5/16	36 1/8	0.180
14 1/16	16 7/8	20 5/16	24 1/4	30 11/16	34 1/4	35 5/16	36 1/8	0.190
12 13/16	15 1/4	18 1/8	21 5/8	26 1/8	32 5/16	35 5/16	36 1/8	0.200
11 15/16	14	16 7/16	19 5/16	22 15/16	27 5/8	33 7/8	36 1/8	0.210
11 5/16	12 15/16	15 5/16	17 7/16	20 1/2	24 1/4	29 1/16	35 5/16	0.220
10 1/2	12 1/8	14	16 1/8	18 11/16	21 3/4	25 5/8	30 3/8	0.230
9 7/8	11 3/8	13 1/16	14 15/16	17 5/16	19 15/16	23	26 7/8	0.240
9 1/8	10 3/4	12 3/16	14	15 15/16	18 1/4	20 15/16	24 1/16	0.250
8 15/16	10 3/16	11 1/8	13 1/16	14 15/16	16 15/16	19 3/16	22 1/16	0.260
8 5/16	9 7/16	11	12 7/16	14 1/16	15 7/8	17 15/16	20 1/8	0.270
8 1/16	9 5/16	10 1/2	11 15/16	13 1/4	14 15/16	16 13/16	18 15/16	0.280
7 7/8	8 7/8	10 1/16	11 1/4	12 5/8	14 1/16	15 7/8	17 1/4	0.290
7 5/16	8 5/16	9 5/8	10 3/4	12	13 7/16	15	16 1/4	0.300
7 1/4	8 1/4	9 1/4	10 5/16	11 7/8	12 15/16	14 1/4	15 7/16	0.310
7	7 15/16	8 7/8	9 15/16	11 1/16	12 1/4	13 5/8	15 1/16	0.320
6 13/16	7 9/16	8 5/16	9 7/16	10 5/8	11 7/8	13	14 1/8	0.330
6 9/16	7 1/16	8 1/16	9 1/4	10 1/4	11 3/16	12 1/2	13 3/4	0.340
6 3/16	7 1/16	8	8 15/16	9 7/8	10 7/8	12	13 1/8	0.350
6 1/16	6 7/16	7 3/4	8 3/8	9 5/16	10 3/16	11 5/16	12 5/16	0.360
6	6 3/4	7 5/16	8 1/8	9 1/4	10 1/16	11 1/16	12 1/4	0.370
5 7/8	6 5/16	7 1/16	8 1/8	8 15/16	9 7/8	10 15/16	11 15/16	0.380
5 11/16	6 1/4	7 1/16	7 7/8	8 7/16	9 5/16	10 1/8	11 1/16	0.390
5 5/16	6 1/4	6 15/16	7 5/16	8 1/16	9 1/16	10 1/16	11 1/8	0.400
5 1/4	6 1/16	6 3/4	7 1/8	8 1/4	9	9 7/8	10 3/4	0.410
5 1/4	5 7/16	6 5/16	7 1/4	8	8 15/16	9 3/8	10 7/16	0.420
5 1/4	5 1/4	6 5/16	7 1/4	7 15/16	8 7/8	9 7/8	10 11/16	0.430
5	5 1/8	6 1/4	6 15/16	7 5/8	8 1/16	9 1/8	9 7/8	0.440
4 7/8	5 1/8	6 1/4	6 3/4	7 5/16	8 1/8	8 7/8	9 5/8	0.450
4 15/16	5 1/4	6	6 7/8	7 3/4	7 15/16	8 11/16	9 7/16	0.460
4 15/16	5 1/4	5 7/8	6 7/16	7 1/8	7 7/8	8 7/16	9 1/16	0.470
4 7/8	5 1/8	5 3/4	6 3/8	6 15/16	7 5/16	8 1/4	9	0.480
4 3/4	5 1/16	5 1/8	6 1/16	6 7/16	7 1/16	8 1/16	8 3/4	0.490
4 5/8	4 15/16	5 1/16	6 1/16	6 5/8	7 1/16	7 15/16	8 5/16	0.500
4 9/16	4 15/16	5 1/8	5 15/16	6	7 1/16	7 3/4	8 1/4	0.510
4 1/16	4 3/4	5 1/8	5 15/16	6 1/8	7	7 9/16	8 1/4	0.520
4 1/8	4 5/8	5 1/16	5 7/16	6 1/4	6 15/16	7 7/16	8	0.530

(table continues)

TABLE 3-11 VALUES OF L FOR PIPE SIZES ≥ NPS 52 AND < NPS 56 (CONT'D)

Depth, d, in.	Wall Thickness, t, in. 0.406	0.438	0.469	0.500	0.562	0.625	0.688	0.750
0.540	.....	.....	.....	.....	.....	.....	3 1/16	3 5/16
0.550	.....	.....	.....	.....	.....	.....	3	3 1/2
0.560	.....	.....	.....	.....	.....	.....	.....	3 3/8
0.570	.....	.....	.....	.....	.....	.....	.....	3 3/16
0.580	.....	.....	.....	.....	.....	.....	.....	3 1/8
0.590	.....	.....	.....	.....	.....	.....	.....	3 1/16
0.600	.....	.....	.....	.....	.....	.....	.....	3 1/8
0.610	.....	.....	.....	.....	.....	.....	.....	.....
0.620	.....	.....	.....	.....	.....	.....	.....	.....
0.630	.....	.....	.....	.....	.....	.....	.....	.....
0.640	.....	.....	.....	.....	.....	.....	.....	.....
0.650	.....	.....	.....	.....	.....	.....	.....	.....
0.660	.....	.....	.....	.....	.....	.....	.....	.....
0.670	.....	.....	.....	.....	.....	.....	.....	.....
0.680	.....	.....	.....	.....	.....	.....	.....	.....
0.690	.....	.....	.....	.....	.....	.....	.....	.....
0.700	.....	.....	.....	.....	.....	.....	.....	.....
0.710	.....	.....	.....	.....	.....	.....	.....	.....
0.720	.....	.....	.....	.....	.....	.....	.....	.....
0.730	.....	.....	.....	.....	.....	.....	.....	.....
0.740	.....	.....	.....	.....	.....	.....	.....	.....
0.750	.....	.....	.....	.....	.....	.....	.....	.....
0.760	.....	.....	.....	.....	.....	.....	.....	.....
0.770	.....	.....	.....	.....	.....	.....	.....	.....
0.780	.....	.....	.....	.....	.....	.....	.....	.....
0.790	.....	.....	.....	.....	.....	.....	.....	.....
0.800	.....	.....	.....	.....	.....	.....	.....	.....
0.810	.....	.....	.....	.....	.....	.....	.....	.....
0.820	.....	.....	.....	.....	.....	.....	.....	.....
0.830	.....	.....	.....	.....	.....	.....	.....	.....
0.840	.....	.....	.....	.....	.....	.....	.....	.....
0.850	.....	.....	.....	.....	.....	.....	.....	.....
0.860	.....	.....	.....	.....	.....	.....	.....	.....
0.870	.....	.....	.....	.....	.....	.....	.....	.....
0.880	.....	.....	.....	.....	.....	.....	.....	.....
0.890	.....	.....	.....	.....	.....	.....	.....	.....
0.900	.....	.....	.....	.....	.....	.....	.....	.....
0.910	.....	.....	.....	.....	.....	.....	.....	.....
0.920	.....	.....	.....	.....	.....	.....	.....	.....
0.930	.....	.....	.....	.....	.....	.....	.....	.....
0.940	.....	.....	.....	.....	.....	.....	.....	.....
0.950	.....	.....	.....	.....	.....	.....	.....	.....
0.960	.....	.....	.....	.....	.....	.....	.....	.....
0.970	.....	.....	.....	.....	.....	.....	.....	.....
0.980	.....	.....	.....	.....	.....	.....	.....	.....
0.990	.....	.....	.....	.....	.....	.....	.....	.....
1.000	.....	.....	.....	.....	.....	.....	.....	.....
1.010	.....	.....	.....	.....	.....	.....	.....	.....

TABLE 3-11 VALUES OF *L* FOR PIPE SIZES ≥ NPS 52 AND < NPS 56 (CONT'D)

Wall Thickness, *t*, in.								Depth, *d*, in.
0.812	0.875	0.938	1.000	1.062	1.125	1.188	1.250	
4 1/16	4 9/16	5 1/16	5 5/16	6 1/8	6 11/16	7 3/16	7 7/8	0.540
3 15/16	4 7/16	4 15/16	5 1/2	6	6 9/16	7 1/8	7 3/4	0.550
3 7/8	4 3/8	4 7/8	5 3/8	5 7/8	6 7/16	7	7 5/8	0.560
3 13/16	4 5/16	4 13/16	5 5/16	5 13/16	6 5/16	6 7/8	7 7/16	0.570
3 3/4	4 3/16	4 11/16	5 3/16	5 11/16	6 1/4	6 3/4	7 5/16	0.580
3 11/16	4 1/8	4 5/8	5 1/8	5 5/16	6 1/8	6 5/8	7 3/16	0.590
3 5/16	4 1/16	4 1/2	5	5 1/2	6	6 9/16	7 1/16	0.600
3 1/2	4	4 7/16	4 15/16	5 1/8	5 7/8	6 7/16	6 15/16	0.610
3 7/16	3 7/8	4 3/8	4 13/16	5 3/16	5 13/16	6 3/16	6 13/16	0.620
3 3/8	3 13/16	4 5/16	4 3/4	5 1/4	5 11/16	6 1/16	6 11/16	0.630
3 5/16	3 3/4	4 3/16	4 11/16	5 1/8	5 5/8	6 1/8	6 5/8	0.640
.....	3 11/16	4 1/8	4 5/8	5 1/16	5 1/2	6	6 1/2	0.650
.....	3 5/8	4 1/16	4 1/2	4 15/16	5 7/16	5 15/16	6 1/8	0.660
.....	3 9/16	4	4 7/16	4 7/8	5 3/8	5 13/16	6 5/16	0.670
.....	3 1/2	3 15/16	4 3/8	4 13/16	5 1/4	5 3/4	6 3/16	0.680
.....	3 7/16	3 7/8	4 5/16	4 3/4	5 3/16	5 5/8	6 1/8	0.690
.....	3 3/8	3 13/16	4 1/4	4 11/16	5 1/8	5 9/16	6	0.700
.....	.....	3 3/4	4 3/16	4 9/16	5	5 1/2	5 15/16	0.710
.....	.....	3 11/16	4 1/8	4 1/2	4 15/16	5 3/8	5 13/16	0.720
.....	.....	3 5/8	4 1/16	4 7/16	4 7/8	5 3/16	5 3/4	0.730
.....	.....	3 9/16	4	4 3/8	4 13/16	5 1/4	5 11/16	0.740
.....	.....	3 1/2	3 15/16	4 5/16	4 3/4	5 1/16	5 5/8	0.750
.....	.....	.....	3 7/8	4 1/4	4 11/16	5 1/8	5 1/2	0.760
.....	.....	.....	3 13/16	4 1/16	4 5/8	5	5 7/16	0.770
.....	.....	.....	3 3/4	4 1/8	4 9/16	4 15/16	5 3/8	0.780
.....	.....	.....	3 11/16	4 1/16	4 1/2	4 7/8	5 5/16	0.790
.....	.....	.....	3 5/8	4	4 7/16	4 13/16	5 1/4	0.800
.....	.....	.....	.....	3 15/16	4 3/8	4 3/4	5 1/8	0.810
.....	.....	.....	.....	3 7/8	4 5/16	4 11/16	5 1/16	0.820
.....	.....	.....	.....	3 13/16	4 1/4	4 5/8	5	0.830
.....	.....	.....	.....	3 13/16	4 3/16	4 9/16	4 15/16	0.840
.....	.....	.....	.....	.....	4 1/8	4 1/2	4 7/8	0.850
.....	.....	.....	.....	.....	4 1/16	4 7/16	4 13/16	0.860
.....	.....	.....	.....	.....	4	4 3/8	4 3/4	0.870
.....	.....	.....	.....	.....	3 15/16	4 5/16	4 11/16	0.880
.....	.....	.....	.....	.....	3 7/8	4 1/4	4 5/8	0.890
.....	.....	.....	.....	.....	3 13/16	4 3/16	4 9/16	0.900
.....	.....	.....	.....	.....	.....	4 1/16	4 1/2	0.910
.....	.....	.....	.....	.....	.....	4	4 7/16	0.920
.....	.....	.....	.....	.....	.....	3 15/16	4 3/8	0.930
.....	.....	.....	.....	.....	.....	4	4 3/8	0.940
.....	.....	.....	.....	.....	.....	3 15/16	4 5/16	0.950
.....	.....	.....	.....	.....	.....	.....	4 1/4	0.960
.....	.....	.....	.....	.....	.....	.....	4 3/16	0.970
.....	.....	.....	.....	.....	.....	.....	4 1/8	0.980
.....	.....	.....	.....	.....	.....	.....	4 1/16	0.990
.....	.....	.....	.....	.....	.....	.....	4	1.000
.....	.....	.....	.....	.....	.....	.....	.....	1.010

TABLE 3-12 VALUES OF *L* FOR PIPE SIZES ≥ NPS 56 AND < NPS 60

Depth, *d*, in.	Wall Thickness, *t*, in. 0.406	0.438	0.469	0.500	0.562	0.625	0.688	0.750
0.040	.....	.....	.....	.....	.....	.....	.....	.....
0.050	21⅜	22 1/16	22 15/16	23 11/16	.....	.....	.....	.....
0.060	21⅜	22 3/16	22 15/16	23 11/16	25⅛	.....	.....	.....
0.070	21⅜	22 3/16	22 15/16	23 11/16	25⅛	26½	27 13/16	.....
0.080	14 13/16	19⅛	22 15/16	23 11/16	25⅛	26½	27 13/16	29 1/16
0.090	11 7/16	13 15/16	17 1/16	21 7/16	25⅛	26½	27 13/16	29 1/16
0.100	9½	11½	13 3/16	15⅞	23⅜	26½	27 13/16	29 1/16
0.110	8 1/16	9 9/16	11 1/16	12⅞	17¾	25 15/16	27 13/16	29 1/16
0.120	7¼	8⅜	9 9/16	11	14½	19 11/16	27 13/16	29 1/16
0.130	6 9/16	7½	8½	9 11/16	12 7/16	16 3/16	21⅜	29 1/16
0.140	6	6 13/16	7 11/16	8 11/16	10 15/16	13⅞	17⅞	23⅜
0.150	5 9/16	6¼	7 1/16	7⅞	9⅞	12¼	15⅜	19 7/16
0.160	5 3/16	5 13/16	6½	7 5/16	9	11 1/16	13⅜	16 13/16
0.170	4 13/16	5 7/16	6 1/16	6¾	8 3/16	10⅛	12¼	14⅞
0.180	4 9/16	5⅛	5 11/16	6 3/16	7 11/16	9 5/16	11¼	13 7/16
0.190	4 5/16	4 13/16	5⅜	5 15/16	7¼	8 11/16	10⅛	12 5/16
0.200	4 1/16	4 9/16	5 1/16	5⅝	6 13/16	8⅛	9 11/16	11⅜
0.210	3⅞	4⅛	4 13/16	5 3/16	6 7/16	7 13/16	9 1/16	10⅝
0.220	3 11/16	4⅛	4⅝	5 1/16	6⅛	7¼	8 9/16	9 15/16
0.230	3½	3 15/16	4⅜	4⅞	5 13/16	6⅞	8⅛	9 7/16
0.240	3⅜	3 11/16	4 3/16	4⅜	5 5/16	6 9/16	7 13/16	8 15/16
0.250	3¼	3⅜	4	4 7/16	5 3/16	6 3/16	7⅜	8½
0.260	3 1/16	3½	3⅞	4¼	5⅛	6 1/16	7 1/16	8⅛
0.270	2 15/16	3 5/16	3 11/16	4⅛	4 15/16	5 13/16	6¼	7¾
0.280	2⅞	3 3/16	3 9/16	3 15/16	4¼	5 5/16	6½	7 7/16
0.290	2¾	3 1/16	3 7/16	3 13/16	4 9/16	5⅛	6¼	7 5/16
0.300	2⅝	3	3 3/16	3 11/16	4⅜	5 3/16	6	6⅞
0.310	2 9/16	2⅞	3 1/16	3 9/16	4¼	5	5 13/16	6⅝
0.320	2 7/16	2¾	3⅛	3 7/16	4⅛	4⅞	5⅝	6 7/16
0.330	.....	2 11/16	3	3 5/16	4	4 11/16	5 7/16	6¼
0.340	.....	2 9/16	2⅞	3 3/16	3⅞	4 5/16	5¼	6 1/16
0.350	.....	2½	2 13/16	3⅛	3¾	4 1/16	5⅛	5⅞
0.360	.....	.....	2 11/16	3	3⅝	4 3/16	5	5 11/16
0.370	.....	.....	2⅝	2 15/16	3½	4⅜	4 13/16	5½
0.380	.....	.....	.....	2 13/16	3 7/16	4⅜	4 13/16	5⅜
0.390	.....	.....	.....	2¾	3 3/16	3 15/16	4⅜	5¼
0.400	.....	.....	.....	2 11/16	3¼	3 13/16	4 7/16	5 1/16
0.410	.....	.....	.....	.....	3⅛	3¾	4 3/16	4 15/16
0.420	.....	.....	.....	.....	3 1/16	3⅝	4⅛	4 13/16
0.430	.....	.....	.....	.....	3	3 9/16	4⅛	4¼
0.440	.....	.....	.....	.....	2⅞	3 7/16	4	4⅜
0.450	.....	.....	.....	.....	.....	3⅜	3 15/16	4½
0.460	.....	.....	.....	.....	.....	3¼	3 13/16	4⅜
0.470	.....	.....	.....	.....	.....	3 9/16	3¾	4 5/16
0.480	.....	.....	.....	.....	.....	3⅜	3 11/16	4 1/16
0.490	.....	.....	.....	.....	.....	3 1/16	3 5/16	4⅛
0.500	.....	.....	.....	.....	.....	3	3½	4
0.510	.....	.....	.....	.....	.....	.....	3 7/16	3 15/16
0.520	.....	.....	.....	.....	.....	.....	3 3/16	3⅞
0.530	.....	.....	.....	.....	.....	.....	3¼	3¾

TABLE 3-12 VALUES OF *L* FOR PIPE SIZES ≥ NPS 56 AND < NPS 60

Wall Thickness, *t*, in.								Depth, *d*, in.
0.812	0.875	0.938	1.000	1.062	1.125	1.188	1.250	
.....	.....	.....	.....	.....	.....	.....	.....	0.040
.....	.....	.....	.....	.....	.....	.....	.....	0.050
.....	.....	.....	.....	.....	.....	.....	.....	0.060
.....	.....	.....	.....	.....	.....	.....	.....	0.070
.....	.....	.....	.....	.....	.....	.....	.....	0.080
30 3/16	31 3/8	.....	.....	.....	.....	.....	.....	0.090
30 3/16	31 3/8	32 1/2	.....	.....	.....	.....	.....	0.100
30 3/16	31 3/8	32 1/2	33 1/2	34 9/16	.....	.....	.....	0.110
30 3/16	31 3/8	32 1/2	33 1/2	34 9/16	35 9/16	36 9/16	.....	0.120
30 3/16	31 3/8	32 1/2	33 1/2	34 9/16	35 9/16	36 9/16	37 1/2	0.130
30 3/16	31 3/8	32 1/2	33 1/2	34 9/16	35 9/16	36 9/16	37 1/2	0.140
25 1/8	31 3/8	32 1/2	33 1/2	34 9/16	35 9/16	36 9/16	37 1/2	0.150
21	26 15/16	32 1/2	33 1/2	34 9/16	35 9/16	36 9/16	37 1/2	0.160
18 3/16	22 9/16	28 11/16	33 1/2	34 9/16	35 9/16	36 9/16	37 1/2	0.170
16 3/16	19 5/8	24 3/16	30 5/16	34 9/16	35 9/16	36 9/16	37 1/2	0.180
14 5/8	17 1/2	21 1/16	25 11/16	31 7/8	35 9/16	36 9/16	37 1/2	0.190
13 3/8	15 13/16	18 13/16	22 7/16	27 1/8	33 9/16	36 9/16	37 1/2	0.200
12 3/8	14 1/2	17 9/16	20 9/16	23 3/4	28 3/8	35 3/16	37 1/2	0.210
11 9/16	13 7/16	15 5/8	18 3/16	21 5/16	25 3/16	30 1/8	36 3/8	0.220
10 7/8	12 9/16	14 1/2	16 3/4	19 3/8	22 9/16	26 9/16	31 9/16	0.230
10 1/4	11 13/16	13 9/16	15 1/2	17 13/16	20 5/16	23 7/8	27 7/8	0.240
9 3/4	11 1/8	12 3/4	14 1/2	16 5/16	18 15/16	21 3/4	25 1/16	0.250
9 1/4	10 5/16	12 1/16	13 11/16	15 1/2	17 5/8	20 5/16	22 7/8	0.260
8 7/8	10 1/16	11 7/16	12 13/16	14 5/16	16 1/2	18 5/8	21 1/8	0.270
8 1/2	9 5/8	10 7/8	12 1/4	13 3/4	15 1/2	17 7/16	19 5/8	0.280
8 1/8	9 1/4	10 7/16	11 11/16	13 1/16	14 11/16	16 7/16	18 7/16	0.290
7 11/16	8 7/8	10	11 1/16	12 1/2	13 13/16	15 5/16	17 1/8	0.300
7 5/16	8 5/16	9 5/16	10 11/16	11 13/16	13 1/16	14 11/16	16 7/16	0.310
7 1/16	8 1/16	9 1/4	10 3/16	11 7/16	12 3/4	14 1/8	15 5/8	0.320
7 1/16	7 13/16	8 7/8	9 13/16	11	12 3/16	13 1/2	14 13/16	0.330
6 13/16	7 9/16	8 3/8	9 5/16	10 3/8	11 3/4	12 13/16	14 1/16	0.340
6 5/8	7 3/16	8 1/16	9 1/4	10 1/4	11 3/16	12 1/2	13 13/16	0.350
6 7/16	7 1/16	8 1/16	8 13/16	9 7/8	10 13/16	12	13 3/16	0.360
6 1/4	7	7 13/16	8 11/16	9 5/16	10 5/16	11 3/8	12 11/16	0.370
6 1/16	6 13/16	7 5/8	8 7/16	9 3/16	10 1/4	11 1/4	12 5/16	0.380
5 15/16	6 5/8	7 3/8	8 1/16	9	9 13/16	10 7/8	11 7/8	0.390
5 3/4	6 7/16	7 3/16	7 15/16	8 3/4	9 5/8	10 5/16	11 1/2	0.400
5 5/8	6 3/16	7	7 3/4	8 1/2	9 3/8	10 1/4	11 3/16	0.410
5 7/16	6 1/8	6 13/16	7 5/16	8 3/16	9 1/8	9 15/16	10 7/8	0.420
5 3/16	6	6 11/16	7 1/8	8 1/8	8 7/8	9 11/16	10 5/16	0.430
5 3/16	5 7/8	6 1/2	7 1/16	7 7/8	8 5/8	9 7/16	10 1/4	0.440
5 1/16	5 11/16	6 1/8	7	7 11/16	8 7/16	9 3/16	10	0.450
5	5 9/16	6 3/16	6 7/8	7 9/16	8 1/4	9	9 3/4	0.460
4 7/8	5 7/16	6 1/16	6 7/16	7 1/8	8 1/16	8 13/16	9 5/16	0.470
4 3/4	5 3/16	5 11/16	6 5/16	7 1/16	7 7/8	8 5/16	9 1/16	0.480
4 5/8	5 1/8	5 9/16	6 1/16	7 3/16	7 11/16	8 1/8	9 1/8	0.490
4 5/16	5 1/8	5 7/16	6 3/16	6 7/8	7 5/16	8 1/16	8 7/8	0.500
4 3/16	5	5 5/16	6 1/16	6 3/4	7 1/8	8 1/16	8 11/16	0.510
4 1/8	4 15/16	5 3/16	6 1/16	6 5/8	7 1/4	7 7/8	8 5/16	0.520
4 1/8	4 13/16	5 1/8	5 15/16	6 1/2	7 1/8	7 3/4	8 1/8	0.530

(table continues)

TABLE 3-12 VALUES OF L FOR PIPE SIZES ≥ NPS 56 AND < NPS 60 (CONT'D)

Depth, d, in	Wall Thickness, t, in. 0.406	0.438	0.469	0.500	0.562	0.625	0.688	0.750
0.540	.....	.....	.....	.....	.....	.....	3 1/16	3 11/16
0.550	.....	.....	.....	.....	.....	.....	3 1/8	3 3/8
0.560	.....	.....	.....	.....	.....	.....	.....	3 5/16
0.570	.....	.....	.....	.....	.....	.....	.....	3 7/16
0.580	.....	.....	.....	.....	.....	.....	.....	3 1/2
0.590	.....	.....	.....	.....	.....	.....	.....	3 9/16
0.600	.....	.....	.....	.....	.....	.....	.....	3 1/4
0.610	.....	.....	.....	.....	.....	.....	.....	.....
0.620	.....	.....	.....	.....	.....	.....	.....	.....
0.630	.....	.....	.....	.....	.....	.....	.....	.....
0.640	.....	.....	.....	.....	.....	.....	.....	.....
0.650	.....	.....	.....	.....	.....	.....	.....	.....
0.660	.....	.....	.....	.....	.....	.....	.....	.....
0.670	.....	.....	.....	.....	.....	.....	.....	.....
0.680	.....	.....	.....	.....	.....	.....	.....	.....
0.690	.....	.....	.....	.....	.....	.....	.....	.....
0.700	.....	.....	.....	.....	.....	.....	.....	.....
0.710	.....	.....	.....	.....	.....	.....	.....	.....
0.720	.....	.....	.....	.....	.....	.....	.....	.....
0.730	.....	.....	.....	.....	.....	.....	.....	.....
0.740	.....	.....	.....	.....	.....	.....	.....	.....
0.750	.....	.....	.....	.....	.....	.....	.....	.....
0.760	.....	.....	.....	.....	.....	.....	.....	.....
0.770	.....	.....	.....	.....	.....	.....	.....	.....
0.780	.....	.....	.....	.....	.....	.....	.....	.....
0.790	.....	.....	.....	.....	.....	.....	.....	.....
0.800	.....	.....	.....	.....	.....	.....	.....	.....
0.810	.....	.....	.....	.....	.....	.....	.....	.....
0.820	.....	.....	.....	.....	.....	.....	.....	.....
0.830	.....	.....	.....	.....	.....	.....	.....	.....
0.840	.....	.....	.....	.....	.....	.....	.....	.....
0.850	.....	.....	.....	.....	.....	.....	.....	.....
0.860	.....	.....	.....	.....	.....	.....	.....	.....
0.870	.....	.....	.....	.....	.....	.....	.....	.....
0.880	.....	.....	.....	.....	.....	.....	.....	.....
0.890	.....	.....	.....	.....	.....	.....	.....	.....
0.900	.....	.....	.....	.....	.....	.....	.....	.....
0.910	.....	.....	.....	.....	.....	.....	.....	.....
0.920	.....	.....	.....	.....	.....	.....	.....	.....
0.930	.....	.....	.....	.....	.....	.....	.....	.....
0.940	.....	.....	.....	.....	.....	.....	.....	.....
0.950	.....	.....	.....	.....	.....	.....	.....	.....
0.960	.....	.....	.....	.....	.....	.....	.....	.....
0.970	.....	.....	.....	.....	.....	.....	.....	.....
0.980	.....	.....	.....	.....	.....	.....	.....	.....
0.990	.....	.....	.....	.....	.....	.....	.....	.....
1.000	.....	.....	.....	.....	.....	.....	.....	.....
1.010	.....	.....	.....	.....	.....	.....	.....	.....

TABLE 3-12 VALUES OF *L* FOR PIPE SIZES ≥ NPS 56 AND < NPS 60 (CONT'D)

Wall Thickness, *t*, in.								Depth,
0.812	0.875	0.938	1.000	1.062	1.125	1.188	1.250	*d*, in.
4 3/16	4 11/16	5 1/4	5 13/16	6 3/8	6 15/16	7 9/16	8 1/16	0.540
4 1/8	4 5/8	5 1/8	5 11/16	6 1/4	6 13/16	7 7/16	8 1/16	0.550
4	4 9/16	5 1/16	5 5/8	6 1/8	6 11/16	7 5/16	7 7/8	0.560
3 15/16	4 7/16	4 15/16	5 1/2	6	6 5/16	7 1/8	7 3/4	0.570
3 7/8	4 3/8	4 7/8	5 3/8	5 15/16	6 7/16	7	7 5/8	0.580
3 13/16	4 5/16	4 13/16	5 5/16	5 13/16	6 3/8	6 7/8	7 7/16	0.590
3 3/4	4 3/16	4 11/16	5 3/16	5 11/16	6 1/4	6 3/4	7 3/16	0.600
3 5/8	4 1/8	4 5/8	5 1/8	5 5/8	6 1/8	6 11/16	7 3/16	0.610
3 5/16	4 1/16	4 9/16	5	5 1/2	6	6 5/16	7 1/16	0.620
3 1/2	4	4 7/16	4 15/16	5 7/16	5 15/16	6 7/16	7	0.630
3 7/16	3 15/16	4 3/8	4 7/8	5 5/16	5 13/16	6 3/16	6 7/8	0.640
.....	3 13/16	4 5/16	4 3/4	5 1/4	5 3/4	6 1/4	6 3/4	0.650
.....	3 3/4	4 1/4	4 11/16	5 1/8	5 5/8	6 1/8	6 5/8	0.660
.....	3 11/16	4 3/16	4 5/8	5 1/16	5 9/16	6 1/16	6 9/16	0.670
.....	3 5/8	4 1/16	4 9/16	5	5 7/16	5 15/16	6 7/16	0.680
.....	3 5/16	4	4 7/16	4 15/16	5 3/8	5 7/8	6 5/16	0.690
.....	3 1/2	3 15/16	4 3/8	4 13/16	5 5/16	5 3/4	6 1/4	0.700
.....	.....	3 7/8	4 5/16	4 3/4	5 1/4	5 11/16	6 1/8	0.710
.....	.....	3 13/16	4 1/4	4 11/16	5 1/8	5 5/8	6 1/16	0.720
.....	.....	3 3/4	4 1/16	4 5/8	5 1/16	5 1/2	6	0.730
.....	.....	3 11/16	4 1/8	4 9/16	5	5 7/16	5 7/8	0.740
.....	.....	3 5/8	4 1/16	4 1/2	4 15/16	5 3/8	5 13/16	0.750
.....	.....	.....	4	4 7/16	4 7/8	5 3/16	5 3/4	0.760
.....	.....	.....	3 15/16	4 3/8	4 3/4	5 1/16	5 5/8	0.770
.....	.....	.....	3 7/8	4 5/16	4 11/16	5 1/8	5 5/16	0.780
.....	.....	.....	3 13/16	4 1/4	4 5/8	5 1/16	5 1/2	0.790
.....	.....	.....	3 3/4	4 3/16	4 9/16	5	5 7/16	0.800
.....	.....	.....	.....	4 1/8	4 1/2	4 15/16	5 3/8	0.810
.....	.....	.....	.....	4 1/16	4 7/16	4 7/8	5 1/4	0.820
.....	.....	.....	.....	4	4 3/8	4 13/16	5 1/16	0.830
.....	.....	.....	.....	3 15/16	4 5/16	4 3/4	5 1/8	0.840
.....	.....	.....	.....	.....	4 1/4	4 11/16	5 1/16	0.850
.....	.....	.....	.....	.....	4 1/16	4 5/8	5	0.860
.....	.....	.....	.....	.....	4 1/8	4 9/16	4 15/16	0.870
.....	.....	.....	.....	.....	4 1/8	4 1/2	4 7/8	0.880
.....	.....	.....	.....	.....	4 1/16	4 7/16	4 13/16	0.890
.....	.....	.....	.....	.....	4	4 3/8	4 3/4	0.900
.....	.....	.....	.....	.....	.....	4 5/16	4 11/16	0.910
.....	.....	.....	.....	.....	.....	4 1/4	4 5/8	0.920
.....	.....	.....	.....	.....	.....	4 3/16	4 9/16	0.930
.....	.....	.....	.....	.....	.....	4 1/8	4 1/2	0.940
.....	.....	.....	.....	.....	.....	4 1/8	4 7/16	0.950
.....	.....	.....	.....	.....	.....	.....	4 7/16	0.960
.....	.....	.....	.....	.....	.....	.....	4 3/8	0.970
.....	.....	.....	.....	.....	.....	.....	4 3/16	0.980
.....	.....	.....	.....	.....	.....	.....	4 1/16	0.990
.....	.....	.....	.....	.....	.....	.....	4 1/16	1.000
.....	.....	.....	.....	.....	.....	.....	.....	1.010

PART 4
EVALUATION OF MAOP IN CORRODED AREAS

4.1 COMPUTATION OF *A*

If the measured maximum depth of the corroded area is greater than 10% of the nominal wall thickness but less than 80% of the nominal wall thickness and the measured longitudinal extent of the corroded area is greater than the value determined by Eq. (2) of Part 2, calculate

$$A = 0.893\left(\frac{L_m}{\sqrt{Dt}}\right)$$

where

L_m = measured longitudinal extent of the corroded area, in.

D = nominal outside diameter of the pipe, in.

t = nominal wall thickness of the pipe, in. Additional wall thickness required for concurrent external loads shall not be included in the calculations.

4.2 COMPUTATION OF *P'*

(a) For Values of A Less Than or Equal to 4.0. A and d/t determine a unique point on Fig. 4-1 corresponding to an acceptable pressure level P'. P' is obtained by interpolation between the curves for P, $0.95P$, $0.90P$, $0.85P$, $0.80P$, $0.75P$, $0.70P$, $0.65P$, $0.60P$.

d = measured maximum depth of corroded area, in.

P' = the safe maximum pressure for the corroded area. Curves for various values of P' are given in Fig. 4-1 per

$$P' = 1.1P\left[\frac{1 - \frac{2}{3}\left(\frac{d}{t}\right)}{1 - \frac{2}{3}\left(\frac{d}{t\sqrt{A^2 + 1}}\right)}\right]$$

except that P' may not exceed P.

P = the greater of either the established MAOP or

$$P = 2StFT/D$$

where

S = specified minimum yield strength (SMYS), psi

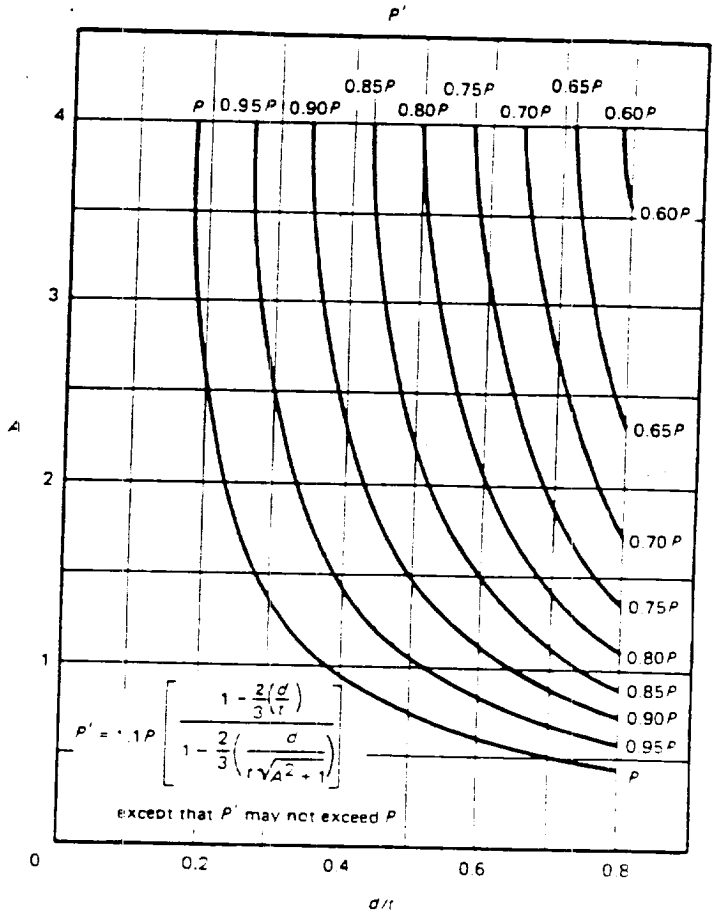

FIG. 4-1 CURVE FOR OBTAINING P' AS A FUNCTION OF d/t FOR VALUES OF A LESS THAN OR EQUAL TO 4.0

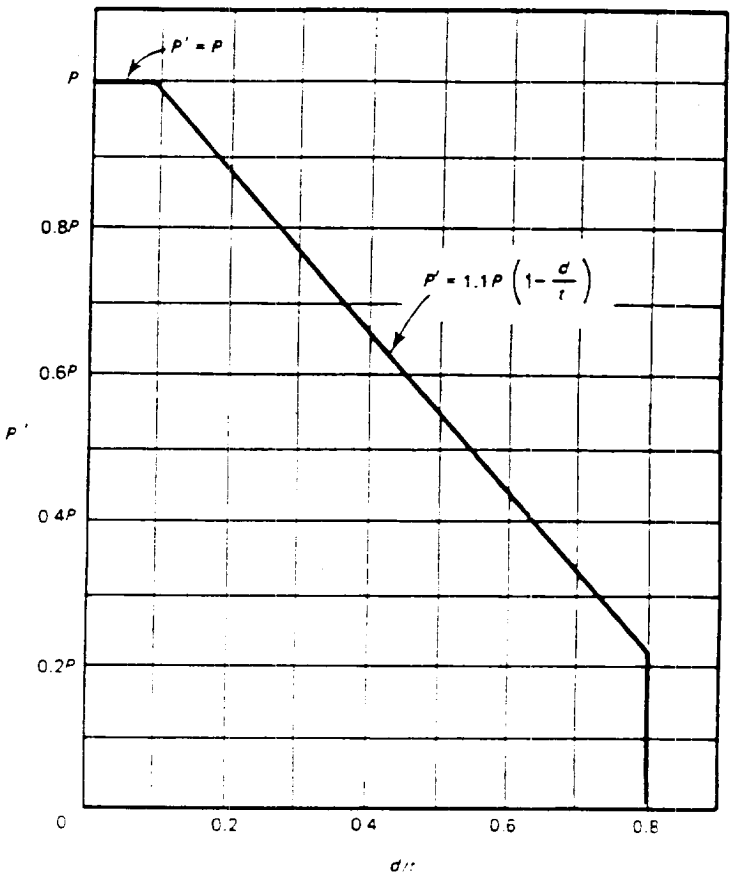

FIG. 4-2 P' AS A FUNCTION OF d/t FOR VALUES OF A GREATER THAN 4.0

F = appropriate design factor from ASME B31.4, ASME B31.8, or ASME B31.11

T = temperature derating factor from the appropriate B31 Code (if none listed, $T = 1$)

D = nominal outside diameter of the pipe, in.

t = nominal wall thickness of the pipe, in. Additional wall thickness required for concurrent external loads shall not be included in the calculations.

(b) For Values of A Greater Than 4.0

P' = the safe maximum pressure for the corroded area. Curves for various values of P' are given in Fig. 4-2 per

$$P' = 1.1P\left[1 - \frac{d}{t}\right]$$

except that P' may not exceed P.

4.3 MAOP AND P'

If the established MAOP is equal to or less than P', the corroded region may be used for service at that MAOP. If it is greater than P', then a lower MAOP should be established not to exceed P', or the corroded region should be repaired or replaced.

APPENDIX A
BASIC Computer Program, CRVL.BAS, for Determining Allowable Length *L* (Part 2) or Alternative Maximum Allowable Operating Pressure (Part 4)

Enter program and input as indicated. The examples should be used to verify correct entry of the program.

PROGRAM LISTING FOR CRVL.BAS BY R.L.SEIFERT

```
10 'PROGRAM WRITTEN BY R.L.SEIFERT, TENNESSEE GAS PIPELINE COMPANY,IN MICROSOFT
BASIC AND OPERABLE ON VARIOUS PERSONAL COMPUTERS, FEBRUARY 6, 1982, MODIFIED SEP
TEMBER 1984.
20 'EVALUATE EXTERNALLY CORRODED HIGH PRESSURE GAS PIPING TO DETERMINE THE MAXIM
UM PRESSURE THAT IT CAN SAFELY CONTAIN.
25 'THIS SYSTEM WAS DEVELOPED AT BATTELLE MEMORIAL INSTITUTE, COLUMBUS OHIO.
26 '***** PLEASE NOTE, THAT IF THE CORRODED SURFACE AREA EXTENDS ONTO OR ACROSS
A WELD, THEN THIS METHOD IS NOT VALID.  THE CORROSION MUST THEN BE EVALUATED BY
COMPANY-DESIGNATED SPECIALISTS.*****
30 'COMPUTER WILL DISPLAY AN "ILLEGAL FUNCTION ERROR" IF MAOP IS SET HIGHER THAN
 1.1 X P, BECAUSE AN ATTEMPT TO FIND THE SQUARE ROOT OF A NEGATIVE NUMBER WILL R
ESULT.  IN PRACTICE, THE MAOP WOULD NEVER BE SET THAT HIGH.
40 ' IF MAOP IS SET SLIGHTLY BELOW 1.1 X P, AND CORROSION DEPTH IS ALMOST 10% OF
 WALL THICKNESS, COMPUTER MAY CALL FOR A REDUCTION OF PRESSURE, BUT IT WILL ALSO
 STATE THAT THERE IS NO RESTRICTION OF OPERATION DUE TO d < .1t.
50 'MAOP IS NEVER SET THAT HIGH IN PRACTICE, SO THIS SHOULD BE NO PROBLEM.  THE
10% ALLOWABLE DEPTH WITH NO OPERATING RESTRICTIONS SHOULD APPLY.
60 'IF DEPTH OR LENGTH ARE SET TO ZERO, A RESPECTIVE SAFE LENGTH OR SAFE DEPTH W
ILL BE DETERMINED, EVEN THOUGH THAT IS AN IMPOSSIBILITY.  REGARD THE ZEROS AS IN
FINITESIMALS RATHER THAN ZEROS. (0 = .000001, FOR EXAMPLE)
70 'IF CORROSION DEPTH (d) IS ENTERED >1.5 X WALL THICKNESS (t), THEN THE EXPRES
SION (2/3 X (t/d) WILL BE =>1.  THIS WILL CAUSE A "DIVISION BY ZERO" ERROR IN TH
E CALCULATIONS.  DEPTH OF CORROSION CAN NEVER BE > WALL THICKNESS ANYWAY.
72 SCREEN 0,0,0:WIDTH 80:COLOR 14,1,0
75 DEFDBL A-Z
80 CLS:INPUT"MAXIMUM ALLOWABLE PRESSURE (MAOP) #/Sq.In.                    ";M
90 INPUT"ENTER OUTSIDE DIAMETER OF PIPE (D) Inches                  ";D
100 INPUT"ENTER PIPE WALL THICKNESS (t) Inch(es)                    ";T
110 INPUT"ENTER STRENGTH OF STEEL (SMYS) Lbs/sq.in.                 ";S
120 INPUT"ENTER DESIGN FACTOR (F) (.72,.60,.50,.40)                 ";F
130 INPUT"ENTER MAXIMUM CORROSION DEPTH (d)  Inch                   ";DE
140 INPUT"MAX.LONGITDNAL.LGTH OF CORRODED AREA (L) Inches           ";L
150 PRINT:IF DE>.8*T THEN INPUT"DEPTH OF CORROSION EXCEEDS 80% OF PIPEWALL. PIPE
 MUST BE REPLACED.                    PRESS <ENTER> FOR FURTHER EVALUATION.";EN
160 IF DE=<.1*T THEN INPUT"CORROSION DEPTH IS LESS THAN 10% OF PIPE WALL. NO RES
TRICTIONS ON OPERATION.     PRESS <ENTER> FOR FURTHER EVALUATION.";EN
170 P=INT((2*S*T*F/D)+.5):A=(.893*L)/(D*T)^.5:A=(INT(1000*A))*.001
180 IF A<=4 THEN PS=INT(1.1*P*((1-((2*DE)/(3*T)))/(1-((2/3)*(DE/(T*(A^2+1))^.5)))
))+.5)
190 IF A>4 THEN PS=INT(1.1*P*(1-(DE/T))+.5)
195 IF PS>P THEN PS=P
200 CLS:PRINT"                          -- INPUTTED DATA --"
210 PRINT"PIPE DIAMETER (D)="D"In.";TAB(30)"DESIGN FACTOR(F)="F
220 PRINT"WALL THICKNESS(t) ="T"In.";TAB(30)"MAX.COR.DPTH(d) ="DE"In.
230 PRINT"SMYS     ="S"PSI";TAB(30)"MAX.COR.LGTH(L) ="L"In.
240 PRINT"                          MAOP  ="M"PSI
250 PRINT"                        -- CALCULATED DATA --"
260 PRINT"                  INTERMEDIATE FACTOR (A)= ";:PRINT USING "##.###";(INT(10
00*A))*.001
270 PRINT"DESIGN PRESS.(P)="P"PSI";TAB(30)"SAFE PRESS.(P') ="PS"PSI"
```

** LISTING CONTINUES **

PROGRAM LISTING FOR CRVL.BAS BY R.L.SEIFERT - CONTINUED

```
280 IF DE>.8*T THEN PRINT"REPAIR OR REPLACE PIPE BECAUSE CORROSION DEPTH EXC
EEDS .8t."
290 IF PS=>M THEN PRINT"PIPE MAY BE OPERATED SAFELY AT MAOP,"M"PSI"
300 IF M>P THEN PRINT"MAOP EXCEEDS DESIGN PRESSURE (P). VERIFY THAT THIS VAR
IANCE IS VALID."
310 IF M>PS THEN PRINT"REDUCE OPERATING PRESSURE SO IT WILL NOT EXCEED"PS"PS
I, SO THAT PIPE":PRINT"WILL OPERATE LEGALLY AND SAFELY."
330 IF A=<4 THEN DP=((M-(1.1*P))*((3*T)*((A^2+1)^.5)))/(2*(M-((1.1*P)*((A^2+
1)^.5))))):DP=(INT(1000*DP))*.001
340 IF DP>.8*T THEN DP=.8*T
350 IF A=<4 THEN PRINT"WITH CORR.LNGTH."L"In., MAX. DEPTH IS "::PRINT USING
"#.####":(INT((1000*DP)+.5))*.001::PRINT" Inch.  A = "::PRINT USING "##.###"
:(INT((A*1000)+.5))*.001
360 IF A>4 THEN DP=((M/(1.1*P))-1)*(-T)
370 IF DP>.8*T THEN DP=.8*T
380 IF A>4 THEN PRINT"WITH CORR.LNGTH."L"In., MAX.DEPTH IS "::PRINT USING "#
.####":(INT((1000*DP)+.5))*.001::PRINT" Inch.  A = "::PRINT USING"###.###":(
INT((A*1000)+.5))*.001
390 AP=5:PS=INT(1.1*P*(1-(DE/T))+.5):IF PS>P THEN PS=P
400 IF M>PS THEN 420
410 PRINT"WITH CORR.DEPTH"DE"In., MAX. LENGTH IS INFINITY.  A = "::PRINT USI
NG "###.###":AP: GOSUB 530:GOTO 470
420 J=(2*DE)/(3*T):AP=(((J/(1-(((1.1*P)*(1-J))/M)))^(2)-1)^.5:AP=INT((1000*AP
)+.5)*.001:PS=INT(1.1*P*((1-J)/(1-((2/3)*(DE/(T*AP^(2)+1)^.5))))+.5)::CP=INT((1
000*((D*T)^.5)*1.12*AP))*.001:IF PS>P THEN PS=P
430 IF PS>M OR AP>4 THEN 450
440 PRINT"WITH CORR.DEPTH"DE"In., MAX. LENGTH IS "::PRINT USING "###.###":IN
T(1000*((D*T)^.5)*1.12*AP)*.001::PRINT" In. A = "::PRINT USING"###.###":(INT
(AP*1000))*.001:GOSUB 530:GOTO 470
450 AP=4:PS=1.1*P*((1-((2*DE)/(3*T)))/(1-((2/3)*(DE/(T*(AP^(2)+1)^.5))))):PS=I
NT(PS+.5):IF PS>P THEN PS=P
460 GOTO 440
470 PRINT:INPUT"PRESS 1  FOR MORE CORROSION EVALUATIONS ON SAME PIPE,
                 OR 2  FOR CORROSION EVALUATIONS ON DIFFERENT PIPE.";
EN:IF EN=1 THEN 20
480 CLS:PRINT"MAXIMUM ALLOWABLE OPERATING PRESSURE (MAOP) = "M"#/sq.in.
490 PRINT"OUTSIDE DIAMETER OF PIPE (D) =                    "D" inches
500 PRINT"PIPE WALL THICKNESS (t) =                         "T" inch
510 PRINT"SPECIFIED MIN.YIELD STRENGTH OF PIPE (SMYS) =     "S"# sq.in.
520 PRINT"DESIGN FACTOR (F) =                               "F:GOTO 110
530 IF DE>.8*T THEN PRINT"!!! BUT"DE"Inch EXCEEDS ALLOWABLE CORROSION DEPTH
!!!"
540 RETURN
```

END OF PROGRAM LISTING

FOLLOWING ARE SOME EXAMPLES OF THE USE OF THE COMPUTER PROGRAM 'CRVL.BAS' BY R.L.SEIFERT, TENNESSEE GAS PIPELINE COMPANY.

THE PROGRAM PROMPTS THE USER ONE LINE AT A TIME FOR INPUT AS FOLLOWS:

EXAMPLE #1

```
MAXIMUM ALLOWABLE PRESSURE (MAOP) #/Sq.In.                  ? 910
ENTER OUTSIDE DIAMETER OF PIPE (D) Inches                   ? 30
ENTER PIPE WALL THICKNESS (t) Inch(es)                      ? .438
ENTER STRENGTH OF STEEL (SMYS) Lbs/sq.in.                   ? 52000
ENTER DESIGN FACTOR (F) (.72,.60,.50,.40)                   ? .72
ENTER MAXIMUM CORROSION DEPTH (d)  Inch                     ? .1
MAX.LONGITDNAL.LGTH OF CORRODED AREA (L) Inches             ? 7.5
```

AFTER THE USER HAS INPUTTED THE 7.5 IN THE LAST LINE (ABOVE), HE PRESSES THE <ENTER> KEY AND THE FOLLOWING READOUT RESULTS:

```
                    -- INPUTTED DATA --
PIPE DIAMETER (D)= 30 In.      DESIGN FACTOR(F)= .72
WALL THICKNESS(t) = .438 In.   MAX.COR.DPTH(d) = .1 In.
SMYS     = 52000 PSI           MAX.COR.LGTH(L) = 7.5 In.
                    MAOP  = 910 PSI
                    -- CALCULATED DATA --
              INTERMEDIATE FACTOR (A)=  1.847
DESIGN PRESS.(P)= 1093 PSI    SAFE PRESS.(P') = 1093 PSI
PIPE MAY BE OPERATED SAFELY AT MAOP, 910 PSI
WITH CORR.LNGTH. 7.5 In., MAX. DEPTH IS 0.2490 Inch.  A =  1.847
WITH CORR.DEPTH .1 In., MAX. LENGTH IS INFINITY.  A =   5.000

PRESS <1> FOR MORE CORROSION EVALUATIONS ON SAME PIPE.
   OR <2> FOR CORROSION EVALUATIONS ON DIFFERENT PIPE.?
```

FOLLOWING ARE MORE EXAMPLES OF PRINTOUTS OF VARIOUS CORROSION EVALUATIONS, SEVERAL OF WHICH REQUIRE REDUCTION OF PRESSURE, OR REPAIR, TO ALLOW RESUMPTION OF PIPELINE OPERATION.

EXAMPLE #2

```
                    -- INPUTTED DATA --
PIPE DIAMETER (D)= 20 In.      DESIGN FACTOR(F)= .5
WALL THICKNESS(t) = .25 In.    MAX.COR.DPTH(d) = .18 In.
SMYS     = 35000 PSI           MAX.COR.LGTH(L) = 10 In.
                    MAOP  = 400 PSI
                    -- CALCULATED DATA --
              INTERMEDIATE FACTOR (A)=  3.993
DESIGN PRESS.(P)= 438 PSI     SAFE PRESS.(P') = 284 PSI
REDUCE OPERATING PRESSURE SO IT WILL NOT EXCEED 284 PSI, SO THAT PIPE
WILL OPERATE LEGALLY AND SAFELY.
WITH CORR.LNGTH. 10 In., MAX. DEPTH IS 0.0790 Inch.  A =  3.993
WITH CORR.DEPTH .18 In., MAX. LENGTH IS   2.018 In. A =   0.806

PRESS <1> FOR MORE CORROSION EVALUATIONS ON SAME PIPE.
   OR <2> FOR CORROSION EVALUATIONS ON DIFFERENT PIPE.?
```

```
EXAMPLE #3              — INPUTTED DATA —
PIPE DIAMETER (D)= 24 In.     DESIGN FACTOR(F)= .72
WALL THICKNESS(t) = .432 In.  MAX.COR.DPTH(d) = .13 In.
SMYS     = 52000 PSI          MAX.COR.LGTH(L) = 30 In.
                        MAOP  = 910 PSI
                       — CALCULATED DATA —
                 INTERMEDIATE FACTOR (A)=  8.320
DESIGN PRESS.(P)= 1348 PSI    SAFE PRESS.(P') = 1037 PSI
PIPE MAY BE OPERATED SAFELY AT MAOP, 910 PSI
WITH CORR.LNGTH. 30 In., MAX.DEPTH IS 0.167 Inch.  A =   8.320
WITH CORR.DEPTH .13 In., MAX. LENGTH IS INFINITY.  A =   5.000

PRESS <1> FOR MORE CORROSION EVALUATIONS ON SAME PIPE,
   OR <2> FOR CORROSION EVALUATIONS ON DIFFERENT PIPE.?

EXAMPLE #4              — INPUTTED DATA —
PIPE DIAMETER (D)= 24 In.     DESIGN FACTOR(F)= .72
WALL THICKNESS(t) = .432 In.  MAX.COR.DPTH(d) = .3 In.
SMYS     = 52000 PSI          MAX.COR.LGTH(L) = 30 In.
                        MAOP  = 910 PSI
                       — CALCULATED DATA —
                 INTERMEDIATE FACTOR (A)=  8.320
DESIGN PRESS.(P)= 1348 PSI    SAFE PRESS.(P') = 453 PSI
REDUCE OPERATING PRESSURE SO IT WILL NOT EXCEED 453
PSI,          SO THAT PIPE WILL OPERATE LEGALLY AND SAFELY.
WITH CORR.LNGTH. 30 In., MAX.DEPTH IS 0.167 Inch.  A =   8.320
WITH CORR.DEPTH .3 In., MAX. LENGTH IS  12.867 In. A =   3.568

PRESS <1> FOR MORE CORROSION EVALUATIONS ON SAME PIPE,
   OR <2> FOR CORROSION EVALUATIONS ON DIFFERENT PIPE.?


EXAMPLE #5

                       — INPUTTED DATA —
PIPE DIAMETER (D)= 24 In.     DESIGN FACTOR(F)= .72
WALL THICKNESS(t) = .281 In.  MAX.COR.DPTH(d) = .08 In.
SMYS     = 52000 PSI          MAX.COR.LGTH(L) = 15 In.
                        MAOP  = 731 PSI
                       — CALCULATED DATA —
                 INTERMEDIATE FACTOR (A)=  5.158
DESIGN PRESS.(P)= 877 PSI     SAFE PRESS.(P') = 690 PSI
REDUCE OPERATING PRESSURE SO IT WILL NOT EXCEED 690
PSI,          SO THAT PIPE WILL OPERATE LEGALLY AND SAFELY.
WITH CORR.LNGTH. 15 In., MAX.DEPTH IS 0.068 Inch.  A =   5.158
WITH CORR.DEPTH .08 In., MAX. LENGTH IS  11.634 In. A =   4.000

PRESS <1> FOR MORE CORROSION EVALUATIONS ON SAME PIPE,
   OR <2> FOR CORROSION EVALUATIONS ON DIFFERENT PIPE.?
```

```
EXAMPLE #6
MAXIMUM ALLOWABLE PRESSURE (MAOP) #/Sq.In.                  ? 1000
ENTER OUTSIDE DIAMETER OF PIPE (D) Inches                   ? 36
ENTER PIPE WALL THICKNESS (t) Inches)                       ? .5
ENTER STRENGTH OF STEEL (SMYS) Lbs/sq.in.                   ? 52000
ENTER DESIGN FACTOR (F) (.72,.60,.50,.40)                   ? .72
ENTER MAXIMUM CORROSION DEPTH (d)  Inch                     ? .41
MAX.LONGITDNAL.LGTH OF CORRODED AREA (L) Inches             ? 100

DEPTH OF CORROSION EXCEEDS 80% OF PIPEWALL. PIPE MUST BE REPLACED.
PRESS <ENTER> FOR FURTHER EVALUATION.?

                    -- INPUTTED DATA --
PIPE DIAMETER (D)= 36 In.     DESIGN FACTOR(F)= .72
WALL THICKNESS(t) = .5 In.    MAX.COR.DPTH(d) = .41 In.
SMYS     = 52000 PSI          MAX.COR.LGTH(L) = 100 In.
                    MAOP  = 1000 PSI
                    -- CALCULATED DATA --
              INTERMEDIATE FACTOR (A)= 21.048
DESIGN PRESS.(P)= 1040 PSI   SAFE PRESS.(P') = 206 PSI
REPAIR OR REPLACE PIPE BECAUSE CORROSION DEPTH EXCEEDS .8t.
REDUCE OPERATING PRESSURE SO IT WILL NOT EXCEED 206 PSI, SO THAT PIPE
WILL OPERATE LEGALLY AND SAFELY.
WITH CORR.LNGTH. 100 In., MAX.DEPTH IS 0.0630 Inch.  A =  21.048
WITH CORR.DEPTH .41 In., MAX. LENGTH IS   2.556 In. A =   0.538
''' BUT .41 Inch EXCEEDS ALLOWABLE CORROSION DEPTH '''

PRESS <1> FOR MORE CORROSION EVALUATIONS ON SAME PIPE,
   OR <2> FOR CORROSION EVALUATIONS ON DIFFERENT PIPE.?

EXAMPLE #7
MAXIMUM ALLOWABLE PRESSURE (MAOP) #/Sq.In.                  ? 877
ENTER OUTSIDE DIAMETER OF PIPE (D) Inches                   ? 12.625
ENTER PIPE WALL THICKNESS (t) Inches)                       ? .5
ENTER STRENGTH OF STEEL (SMYS) Lbs/sq.in.                   ? 35000
ENTER DESIGN FACTOR (F) (.72,.60,.50,.40)                   ? .4
ENTER MAXIMUM CORROSION DEPTH (d)  Inch                     ? .035
MAX.LONGITDNAL.LGTH OF CORRODED AREA (L) Inches             ? 3

CORROSION DEPTH IS LESS THAN 10% OF PIPE WALL. NO RESTRICTIONS ON OPERATION.
PRESS <ENTER> FOR FURTHER EVALUATION.?

                    -- INPUTTED DATA --
PIPE DIAMETER (D)= 12.625 In.DESIGN FACTOR(F)= .4
WALL THICKNESS(t) = .5 In.    MAX.COR.DPTH(d) = .035 In.
SMYS     = 35000 PSI          MAX.COR.LGTH(L) = 3 In.
                    MAOP  = 877 PSI
                    -- CALCULATED DATA --
              INTERMEDIATE FACTOR (A)=  1.066
DESIGN PRESS.(P)= 1109 PSI   SAFE PRESS.(P') = 1109 PSI
PIPE MAY BE OPERATED SAFELY AT MAOP, 877 PSI
WITH CORR.LNGTH. 3 In., MAX. DEPTH IS 0.4000 Inch.  A =  1.066
WITH CORR.DEPTH .035 In., MAX. LENGTH IS INFINITY.  A =  5.000

PRESS <1> FOR MORE CORROSION EVALUATIONS ON SAME PIPE,
   OR <2> FOR CORROSION EVALUATIONS ON DIFFERENT PIPE.?
```

```
EXAMPLE #8
                    -- INPUTTED DATA --
PIPE DIAMETER (D)= 24 In.     DESIGN FACTOR(F)= .5
WALL THICKNESS(t) = .5 In.    MAX.COR.DPTH(d) = .125 In.
SMYS     = 42000 PSI          MAX.COR.LGTH(L) = 12 In.
                     MAOP   = 790 PSI
                    -- CALCULATED DATA --
              INTERMEDIATE FACTOR (A)=  3.093
DESIGN PRESS.(P)= 875 PSI     SAFE PRESS.(P') = 845 PSI
PIPE MAY BE OPERATED SAFELY AT MAOP, 790 PSI
WITH CORR.LNGTH. 12 In., MAX. DEPTH IS 0.179 Inch.  A =  3.093
WITH CORR.DEPTH .125 In., MAX. LENGTH IS  15.519 In. A =   4.000

PRESS <1> FOR MORE CORROSION EVALUATIONS ON SAME PIPE,
   OR <2> FOR CORROSION EVALUATIONS ON DIFFERENT PIPE.?


THIS IS A TEST FOR THE ABOVE ALLOWABLE DEPTH AND LENGTH VALUES.
TEST #1. ENTER DEPTH OF .179 AND LENGTH OF 12.

                    -- INPUTTED DATA --
PIPE DIAMETER (D)= 24 In.     DESIGN FACTOR(F)= .5
WALL THICKNESS(t) = .5 In.    MAX.COR.DPTH(d) = .179 In.
SMYS     = 42000 PSI          MAX.COR.LGTH(L) = 12 In.
                     MAOP   = 790 PSI
                    -- CALCULATED DATA --
              INTERMEDIATE FACTOR (A)=  3.093
DESIGN PRESS.(P)= 875 PSI     SAFE PRESS.(P') = 791 PSI
PIPE MAY BE OPERATED SAFELY AT MAOP, 790 PSI
WITH CORR.LNGTH. 12 In., MAX. DEPTH IS 0.179 Inch.  A =  3.093
WITH CORR.DEPTH .179 In., MAX. LENGTH IS  12.182 In. A =   3.14

PRESS  1  FOR MORE CORROSION EVALUATIONS ON SAME PIPE,
   OR  2  FOR CORROSION EVALUATIONS ON DIFFERENT PIPE.?


TEST #1A.  ENTER DEPTH .179 AND LENGTH 12.182.

                    -- INPUTTED DATA --
PIPE DIAMETER (D)= 24 In.     DESIGN FACTOR(F)= .5
WALL THICKNESS(t) = .5 In.    MAX.COR.DPTH(d) = .179 In.
SMYS     = 42000 PSI          MAX.COR.LGTH(L) = 12.182 In.
                     MAOP   = 790 PSI
                    -- CALCULATED DATA --
              INTERMEDIATE FACTOR (A)=  3.140
DESIGN PRESS.(P)= 875 PSI     SAFE PRESS.(P') = 790 PSI
PIPE MAY BE OPERATED SAFELY AT MAOP, 790 PSI
WITH CORR.LNGTH. 12.182 In., MAX. DEPTH IS 0.178 Inch.  A =  3.140
WITH CORR.DEPTH .179 In., MAX. LENGTH IS  12.182 In. A =   3.140

PRESS  1  FOR MORE CORROSION EVALUATIONS ON SAME PIPE,
   OR  2  FOR CORROSION EVALUATIONS ON DIFFERENT PIPE.?
```

```
TEST #1B.  INCREASING DEPTH BY A THOUSANDTH SHOULD CAUSE UNSAFE OPERATION.
           ENTER DEPTH OF .180 AND LENGTH OF 12.182
                    -- INPUTTED DATA --
PIPE DIAMETER (D)= 24 In.     DESIGN FACTOR(F)= .5
WALL THICKNESS(t) = .5 In.    MAX.COR.DPTH(d) = .18 In.
SMYS     = 42000 PSI          MAX.COR.LGTH(L) = 12.182 In.
                     MAOP  = 790 PSI
                    -- CALCULATED DATA --
                INTERMEDIATE FACTOR (A)=  3.140
DESIGN PRESS.(P)= 875 PSI     SAFE PRESS.(P') = 789 PSI
REDUCE OPERATING PRESSURE SO IT WILL NOT EXCEED 789
PSI,          SO THAT PIPE WILL OPERATE LEGALLY AND SAFELY.
WITH CORR.LNGTH. 12.182 In., MAX. DEPTH IS 0.178 Inch.  A =  3.140
WITH CORR.DEPTH .18 In., MAX. LENGTH IS  11.961 In. A =   3.083

PRESS <1> FOR MORE CORROSION EVALUATIONS ON SAME PIPE,
   OR <2> FOR CORROSION EVALUATIONS ON DIFFERENT PIPE.?

TEST #2.  INCREASING LENGTH BY A FEW HUNDREDTHS SHOULD CAUSE UNSAFE OPERATION.
          FROM THE SAFE CONDITION OF TEST #1A, INCREASE THE LENGTH FROM 12.182
          IN. TO 12.297 IN.

                    -- INPUTTED DATA --
PIPE DIAMETER (D)= 24 In.     DESIGN FACTOR(F)= .5
WALL THICKNESS(t) = .5 In.    MAX.COR.DPTH(d) = .179 In.
SMYS     = 42000 PSI          MAX.COR.LGTH(L) = 12.297 In.
                     MAOP  = 790 PSI
                    -- CALCULATED DATA --
                INTERMEDIATE FACTOR (A)=  3.170
DESIGN PRESS.(P)= 875 PSI     SAFE PRESS.(P') = 789 PSI
REDUCE OPERATING PRESSURE SO IT WILL NOT EXCEED 789
PSI,          SO THAT PIPE WILL OPERATE LEGALLY AND SAFELY.
WITH CORR.LNGTH. 12.297 In., MAX. DEPTH IS 0.1780 Inch.  A =  3.170
WITH CORR.DEPTH .179 In., MAX. LENGTH IS  12.182 In. A =   3.140

PRESS <1> FOR MORE CORROSION EVALUATIONS ON SAME PIPE,
   OR <2> FOR CORROSION EVALUATIONS ON DIFFERENT PIPE.?

                    ***** END OF EXAMPLES *****
```

REFERENCES:

1. THE PROGRAMMABLE ELECTRONIC CALCULATOR IN UNDERGROUND CORROSION RELATED ACTIVITY. Part 2."Determination of Safe Operating Pressure for a Corroded High Pressure Gas Pipeline" by R.L.Seifert. Materials Performance, Vol.19, No. 7, (1980) July.

2. Kiefner,J.F.,Duffy,A.R. Columbus Laboratories, Battelle Memorial Institute. SUMMARY OF RESEARCH TO DETERMINE THE STRENGTH OF CORRODED AREAS IN PIPE. (1971) 20 July

3. Marvin, C.W.,DETERMINING THE STRENGTH OF CORRODED PIPE. Materials Protection and Performance, Vol.11,No.11,p.34 (1972) November.

4. ASME GUIDE FOR GAS TRANSMISSION AND DISTRIBUTION PIPING SYSTEMS - 1976. Addendum No. 4, February, 1977 (Guide Material for Federal Standard 192.485), and Appendices G-6, G-7, and G-8.

=== END ===

APPENDIX B
BASIC Computer Program, CRLGTHU.BAS, Used in Generating Tables Like Those Which Are Printed in Part 3

Following is the BASIC computer program CRLGTHU.BAS, whose forerunner, CRLGTH.BAS, was used for generating some of the tables in Part 3 with the same computer equipment that is used in Appendix A. This upgraded version, CRLGTHU.BAS, does not require the BASIC program to be modified with each use as did the former version, CRLGTH.BAS, which was included in earlier printing(s) of this manual.

Enter the BASIC program which is listed on the following pages into the computer, and check its operation by running it and entering the following data as prompted: pipe diameter = 20; shallowest pit depth = .03; wall thicknesses as follows: .406, .438, .469, .5, .562, .625, .688, .750, .812, and .875. The printout should duplicate the example which is printed at the end of this Appendix. (Printer commands in the program are for the Epson FX series and compatible printers, and could result in strange formats on other printers.)

CRLGTHU.BAS

A computer program which provides the same type of information and printout as CRLGTH.BAS, except that the program does not need to be modified with each usage, and the user is asked for pipe diameter, the minimum pit depth to begin with, and up to 10 wall thicknesses. The program prompts the user for this information, in increasing order of thicknesses. (A thickness that is out of order will prompt a request to re-enter all of the thicknesses.)

```
10 'CRLGTHU.BAS
20 'THIS PROGRAM IS A UNIVERSAL PROGRAM, AND ALLOWS ENTRY OF ANY DIAMETER OF PIPE
 AND UP TO 10 WALL THICKNESSES TO EXAMINE FOR ALLOWABLE CORROSION LENGTHS.
30 CLS:'PROGRAM CRLGTHU.BAS BY R.L.SEIFERT TO LIST ALLOWED LENGTHS OF CORROSION
 FOR GIVEN DEPTHS OF CORROSION FOR SPECIFIED DIAMETER AND WALL THICKNESSES.FOR
 IBM-PC AND EPSON FX SERIES PRINTERS OR COMPATIBLE EQUIPMENT.
40 CLEAR 5000:DIM ~(17):WIDTH "LPT1:",255
50 LPRINT CHR$(27);"@";:COLOR 7,1,0:CLS
60 PRINT TAB(30)"CRLGTHU.BAS"
70 PRINT TAB(26)"Revision of 2/17/89"
80 PRINT TAB(34)"by"
90 PRINT TAB(24)"Richard L. Seifert, P.E."
100 PRINT TAB(16)"Consultant for Pipeline Corrosion Control"
110 PRINT TAB(34)"and"
120 PRINT TAB(16)"Use and Application of Personal Computers"
130 PRINT TAB(25)"15602 Valley Bend Drive"
140 PRINT TAB(26)"Houston, Texas 77068"
150 PRINT
160 PRINT TAB(10)"This program prints a list of allowed lengths of corroded areas"
170 PRINT TAB(5)"on underground pressure piping for given pit depths. It is a
 general- "
180 PRINT TAB(5)"ized, conservative listing of allowed lengths, and if any
 corroded area "
190 PRINT TAB(5)"is 'condemned' by this listing, the corroded area should be
 examined
200 PRINT TAB(5)"further using Seifert's program CRVL.BAS. CRVL.BAS will examine
 the"
210 PRINT TAB(5)"corroded pipe using precise input parameters, and may allow the
 use of"
220 PRINT TAB(5)"the pipe, when this program, CRLGTHU.BAS, condemns it."
```

```
230 PRINT:PRINT TAB(22);:INPUT"Press <Enter> to proceed. ";EN
240 LPRINT CHR$(27);"@";:CLS:PRINT:INPUT"ADJUST PRINTER PAPER TO TOP OF FORM,
 TURN PRINTER ON, THEN PRESS <ENTER>";EN
250 INPUT"ENTER O.D. OF PIPE TO BE EXAMINED (EXAMPLE: 20)";D
260 INPUT"SHALLOWEST CORROSION DEPTH IN RANGE OF DEPTHS (E.G. .010)";DE:DE1=DE
270 J=0
280 PRINT"BEGIN ENTERING PIPE WALL THICKNESSES IN ASCENDING ORDER, FOR
 CALCULATIONS AND FOR COLUMN HEADINGS. MAXIMUM NUMBER OF ENTRIES = 10."
290 IF J=10 THEN J1=10:INPUT"MAXIMUM NUMBER OF THICKNESSES HAVE BEEN
 ENTERED. PRESS <ENTER> TO PROCEED.";EN:GOTO 330
300 J=J+1:PRINT"COLUMN "J". LAST ENTRY WAS "T(J-1):INPUT"ENTER WALL THICKNESS
 FOR THIS COLUMN. (-1 TO END ENTRIES) ";T(J)
310 IF T(J)=-1 THEN J=J-1:J1=J:GOTO 330
320 GOTO 290
330 FOR J=1 TO J1
340 IF T(J)<T(J-1) THEN BEEP:CLS:FOR Q=1 TO J1-1:PRINT T(Q)"  ";:NEXT Q:PRINT
 T(J1):ELSE 360
350 PRINT:PRINT"Wall thicknesses are all not in ascending order. You must re-enter
 wall thicknesses. Press <Enter> for re-entry of wall
 thicknesses. ":INPUT;EN:CLS:GOTO 270
360 NEXT J
370 LPRINT CHR$(27)"O";:FOR N=1 TO 4:LPRINT:NEXT N:LPRINT CHR$(27)"U";CHR$(1);
380 LPRINT CHR$(27)"G";:LPRINT CHR$(18);TAB(17)"VALUES OF L FOR PIPE WITH
 O.D. OF"D"INCHES"
390 LPRINT STRING$(75,"*")
400 LPRINT CHR$(15);
410 LPRINT"Pit Depth";TAB(60)"Wall Thickness (t), Inches";TAB(128)""
420 J2=19:LPRINT"d(Inch) ";:LPRINT USING"##.###";T(1);:FOR J=2 TO J1:LPRINT
 TAB(J2) USING"##.###";T(J);:J2=J2+12:NEXT J:LPRINT TAB(128)""
430 LPRINT STRING$(127,"=");""
440 FOR N=1 TO 150
450 TAB=0:IF INT(N/5)=N/5 THEN TAB=1:TAB2=1:LPRINT
 CHR$(27)CHR$(45)CHR$(1);: 'START UNDERLINE
460 LPRINT USING"#.###";(INT((DE*1000)+.5))*.001;:LPRINT" ";:TAB=TAB+19:IF
 DE=DE1 AND DE/T(1)<.1 THEN TAB=TAB-1
470 FOR J=1 TO J1
480 T=T(J)
490 IF DE/T<.1 OR DE/T>.8 THEN L$=" ":GOTO 620
500 IF 100*(DE/T)=>10 AND 100*(DE/T)=<17.5 THEN B=4:GOTO 520
510 B=SQR((((DE/T)/((1.1*(DE/T))-.15))^2)-1)
520 L=1.12*B*SQR(D*T)
530 L2=L-INT(L):L3=INT((L2/.0625)+.5):L4$=STR$(L3)+"/16":L=INT(L)
540 IF L3=0 THEN 560
550 IF 16/L3=2 THEN L4$=" 1/2":GOTO 600
```

```
560 IF L3=0 THEN L4$=" ":GOTO 600
570 IF L3=16 THEN L=L+1:L4$=" ":GOTO 600
580 IF INT(L3/2)=L3/2 THEN L3=L3/2:L4$=STR$(L3)+"/8"
590 IF INT(L3/2)=L3/2 THEN L3=L3/2:L4$=STR$(L3)+"/4"
600 IF L=0 THEN L$="  "+L4$:ELSE L$=STR$(L)+L4$
610 IF LEN(STR$(L))=2 THEN LPRINT"  ";
620 GOTO 630
630 LPRINT L$;:IF DE=DE1 THEN 640: ELSE LPRINT TAB(TAB);:TAB=TAB+12:GOTO 650
640 LPRINT TAB(TAB-1);:TAB=TAB+12
650 NEXT J
660 IF DE=DE1 THEN LPRINT TAB(128)"":ELSE LPRINT TAB(128+TAB2)" "
670 LPRINT CHR$(27)CHR$(45)CHR$(0);:TAB2=0 'STOP UNDERLINE
680 IF DE>((T(J1)*.8)+.01) AND L$="  "THEN LPRINT:LPRINT:LPRINT:LPRINT
 CHR$(27)"2":LPRINT  CHR$(27)"U"CHR$(0);:LPRINT  CHR$(27)"H";:WIDTH
 "LPT1:",80:LPRINT CHR$(18);:GOTO 710
690 DE=DE+.01
700 NEXT N
710 FL=1:CLS:Y$="":PRINT:INPUT"Do you want to print another table of acceptable
 corrosion lengths (Y/N*)";Y$:IF Y$="n" OR Y$="N" OR Y$="" THEN END
720 CLEAR 5000:DIM T(17):WIDTH "LPT1:",255
730 LPRINT CHR$(27);"@";:COLOR 7,1,0:CLS:GOTO 240
```

VALUES OF L FOR PIPE WITH O.D. OF 20 INCHES

Pit Depth d(Inch)	Wall Thickness (t), Inches 0.406	0.438	0.469	0.500	0.562	0.625	0.688	0.750	0.812	0.875
0.030										
0.040										
0.050	12 3/4	13 1/4	13 3/4							
0.060	12 3/4	13 1/4	13 3/4	14 3/16	15					
0.070	12 3/4	13 1/4	13 3/4	14 3/16	15	15 13/16	16 5/8			
0.080	8 7/8	11 7/16	13 3/4	14 3/16	15	15 13/16	16 5/8	17 3/8		
0.090	6 13/16	8 5/16	10 3/16	12 13/16	15	15 13/16	16 5/8	17 3/8	18 1/16	18 3/4
0.100	5 11/16	6 11/16	7 15/16	9 1/2	14 1/8	15 13/16	16 5/8	17 3/8	18 1/16	18 3/4
0.110	4 7/8	5 11/16	6 5/8	7 11/16	10 5/8	15 1/2	16 5/8	17 3/8	18 1/16	18 3/4
0.120	4 5/16	[illegible]	5 3/4	6 9/16	8 11/16	11 3/4	16 5/8	17 3/8	18 1/16	18 3/4
0.130	3 15/16	4 1/2	5 1/16	5 3/4	7 7/16	9 13/16	12 15/16	17 3/8	18 1/16	18 3/4
0.140	3 9/16	4 1/16	4 5/8	5 3/16	6 9/16	8 5/16	10 11/16	14	18 1/16	18 3/4
0.150	3 5/16	3 3/4	4 3/16	4 3/4	5 7/8	7 5/16	9 3/16	11 5/8	15	18 3/4
0.160	3 1/16	3 1/2	3 7/8	4 3/8	5 3/8	6 5/8	8 1/8	10 1/16	12 9/16	16 1/16
0.170	2 7/8	3 1/4	3 5/8	4 1/16	4 15/16	6 1/16	7 5/16	8 7/8	10 7/8	13 1/2
0.180	2 11/16	3 1/16	3 7/16	3 13/16	4 5/8	5 9/16	6 11/16	8 1/16	9 11/16	11 3/4
0.190	2 9/16	2 7/8	3 3/16	3 9/16	4 5/16	5 3/16	6 3/16	7 3/8	8 3/4	10 7/16
0.200	2 7/16	2 3/4	3 1/16	3 3/8	4 1/16	4 7/8	5 3/4	6 13/16	8	9 7/16
0.210	2 5/16	2 5/8	2 7/8	3 3/16	3 7/8	4 9/16	5 7/16	6 3/8	7 7/16	8 11/16
0.220	2 3/16	2 1/2	2 3/4	3 1/16	3 5/8	4 5/16	5 1/8	5 15/16	6 15/16	8 1/16
0.230	2 1/8	2 3/8	2 5/8	2 7/8	3 1/2	4 1/8	4 13/16	5 5/8	6 1/2	7 1/2
0.240	2	2 1/4	2 1/2	2 3/4	3 5/16	3 15/16	4 5/8	5 5/16	6 1/8	7 1/16
0.250	1 15/16	2 3/16	2 7/16	2 11/16	3 3/16	3 3/4	4 3/8	5 1/16	5 13/16	6 11/16
0.260	1 7/8	2 1/16	2 5/16	2 9/16	3 1/16	3 5/8	4 3/16	4 13/16	5 9/16	6 5/16
0.270	1 3/4	2	2 1/4	2 7/16	2 15/16	3 7/16	4	4 5/8	5 5/16	6
0.280	1 11/16	1 15/16	2 1/8	2 3/8	2 13/16	3 5/16	3 7/8	4 7/16	5 1/16	5 3/4
0.290	1 5/8	1 7/8	2 1/16	2 1/4	2 3/4	3 3/16	3 3/4	4 1/4	4 7/8	5 1/2
0.300	1 9/16	1 3/4	2	2 3/16	2 5/8	3 1/8	3 5/8	4 1/8	4 11/16	5 5/16
0.310	1 1/2	1 11/16	1 15/16	2 1/8	2 9/16	3	3 1/2	4	4 1/2	5 1/8
0.320	1 7/16	1 5/8	1 7/8	2 1/16	2 7/16	2 7/8	3 3/8	3 7/8	4 3/8	4 15/16
0.330		1 5/8	1 13/16	2	2 3/8	2 13/16	3 1/4	3 3/4	4 3/16	4 3/4
0.340		1 9/16	1 3/4	1 15/16	2 5/16	2 3/4	3 1/8	3 5/8	4 1/16	4 5/8
0.350		1 1/2	1 11/16	1 7/8	2 1/4	2 5/8	3 1/16	3 1/2	3 15/16	4 7/16
0.360			1 5/8	1 13/16	2 3/16	2 9/16	3	3 3/8	3 13/16	4 5/16
0.370			1 9/16	1 3/4	2 1/8	2 1/2	2 7/8	3 5/16	3 3/4	4 3/16
0.380				1 11/16	2 1/16	2 7/16	2 13/16	3 3/16	3 5/8	4 1/16
0.390				1 5/8	2	2 3/8	2 3/4	3 1/8	3 1/2	3 15/16
0.400				1 9/16	1 15/16	2 5/16	2 11/16	3 1/16	3 7/16	3 7/8
0.410					1 7/8	2 1/4	2 9/16	2 15/16	3 3/8	3 3/4
0.420					1 13/16	2 3/16	2 1/2	2 7/8	3 1/4	3 11/16
0.430					1 3/4	2 1/8	2 7/16	2 13/16	3 3/16	3 9/16
0.440					1 3/4	2 1/16	2 3/8	2 3/4	3 1/8	3 1/2
0.450						2	2 3/8	2 11/16	3 1/16	3 7/16
0.460						1 15/16	2 5/16	2 5/8	3	3 5/16
0.470						1 15/16	2 1/4	2 9/16	2 7/8	3 1/4
0.480						[illegible]	2 3/16	2 1/2	2 13/16	3 3/16
0.490						1 13/16	2 1/8	2 7/16	2 3/4	3 1/8
0.500						1 3/4	2 1/16	2 3/8	2 11/16	3 1/16
0.510							2 1/16	2 3/8	2 11/16	3
0.520								2 3/8	2 11/16	2 15/16
0.530								2 1/4	2 9/16	2 7/8
0.540								2 15/16	2 1/2	2 13/16
0.550								2 7/8	2 7/16	2 3/4
0.560									2 3/8	2 11/16
0.570									2 3/4	2 11/16
0.580									2 5/16	2 5/8
0.590									2 1/4	2 9/16
0.600									2 1/4	2 1/2
0.610									2 3/16	2 7/16
0.620									2 1/8	2 7/16
0.630									2 1/8	2 3/8
0.640									2 1/16	2 5/16
0.650										2 5/16
0.660										2 1/4
0.670										2 3/16
0.680										2 3/16
0.690										2 1/8
0.700										2 1/8
0.710										2 1/8
0.720										2 1/8

ASME CODE FOR PRESSURE PIPING, B31

Power Piping B31.1-1989
Chemical Plant and Petroleum Refinery Piping B31.3-1990
Liquid Transportation Systems for Hydrocarbons,
Liquid Petroleum Gas, Anhydrous Ammonia,
and Alcohols B31.4-1989
Refrigeration Piping B31.5-1987
Gas Transmission and Distribution Piping Systems B31.8-1989
Building Services Piping B31.9-1988
Slurry Transportation Piping Systems B31.11-1989

Manual for Determining the Remaining Strength
of Corroded Pipelines: A Supplement
to ASME B31 Code for Pressure Piping B31G-1991

Pipeline Professionals

Olympic Pipe

ANOMALY EVALUATION SUMMARY

To 14-May-02

NDE Length is comparative to ILI, not to be used for calculation

Line Section	Task #	Data Final Prelim	OPL Anomaly Designation	Mile Post Calc	ILI Tool	ILI % DEF	ILI % ML	Log Length	Log Orien	Log Anomaly Description	Seam Type	NDE Date	NDE Tech	NDE Axial Start	NDE Axial Centerline	NDE Length	NDE Anomaly Description	NDE Type	On GW or SEAM?	NDE % DEF	NDE % ML	Gouge In Dent	Crack In Dent	Grind % Re-main	Final Criteria	OPL Mitigate Type	Remarks
16" Ferndale - Allen	3	Final	44 04 56	0 0	UT00		21 10	33	5 01	Poss Mill/Mech Related	LFERW	26-Oct-00	AF/KG	03 04	04 50	35 000	OD corrosion	CP	NO		18 00				NO	CS	
16" Ferndale - Allen	6	Final	1,880 01 13	1 9	UT00		32 50	9 9	9 00	External,1a	LFERW	21-Oct-00	AF/KG	01.05	01 38	7 750	External Corrosion Wall Loss	CP	NO		31 55				NO	CS	soil/air interface
16" Ferndale - Allen	10	Final	2,160 50 24	2 2	DEF00	0 88		6 3	11 00	Dent	LFERW	28-Jun-00	AF	50 03	50 25	5 250	Minor Plain dent, mill related	DP	NO	1 3		NO	NO		YES	CO	
16" Ferndale - Allen	20	Final	2,170 04 38	2 2	MFL00		16 50	0 5	3 00	External	LFERW	12-Jul-00	AF/MW	03 87	04 13	6 250	OD wall loss, Mill related	MO	NO		34 80				YES	RC	
16" Ferndale - Allen	23	Final	2,430 50 53	2 5	UT00		20 00	7 5	7 30	External	LFERW	26-Oct-00	AF/KG	50 15	50 87	12 500	External Corrosion Wall Loss	CP	NO		16 81				NO	CO	
16" Ferndale - Allen	26	Final	3,590 10 03	3 8	UT00		20 00	8 3	1 00	UT Call	LFERW	20-Oct-00	AF/KG	09 97	10 20	5 460	External Corrosion Wall Loss	CP	NO		16 93				YES	RC	GW
16" Ferndale - Allen	30	Final	4,970 49 69	5 2	DEF00	0 81		18 4	9 00	Dent	LFERW	28-Jun-00	MW	49 86	50 13	6 500	Minor Plain dent, mill related	DP	NO	0 9		NO	NO		YES	RC	Span 1 5'
16" Ferndale - Allen	40	Final	6,280 03 68	6 7	DEF00	0 86		11 3	10 00	Dent	LFERW	23-Jun-00	MW	03 46	03 75	7 000	Minor Plain dent, mill related	DP	NO	1 1		NO	NO		YES	RC	
16" Ferndale - Allen	50	Final	7,740 48 66	8 1	DEF00	0 63		16 2	2 00	Dent	LFERW	23-Jun-00	AF	48 33	48 50	4 000	Minor Plain dent, mill related	DP	NO	0 8		NO	NO		YES	RC	
16" Ferndale - Allen	55	Final	7,980 16 24	8 4	DEF00	1 00		27 7	10.30	Dent	LFERW	21-Oct-00	AF/KG	00.21	00 42	5 000	Minor Plain Dent	DP	NO	1 3		NO	NO		YES	CS	
16" Ferndale - Allen	60	Final	11,401 00 45	11 8	MFL00		42 40	0 8	3 30	Possibly Internal In Heavy Wall of Valve	Valve	29-Jun-00	AF	00 13	00 30	4 000	Smooth wall loss area	MI	NO		20 00				YES	RC	
16" Ferndale - Allen	70	Final	12,390 14 31	12 8	UT00				8 00	feature encircling pipe	LFERW	25-Oct-00	AF/KG				No Anomaly Revealed	NA	NO						YES	RC	10' Examine
16" Ferndale - Allen	80	Final	13,880 17 96	14 3	MFL00		18 40	1 4	12 30	External	LFERW	14-Jul-00	AF/MW	17.85	17 96	2 750	ID Wall Loss encrouging on seam	MI	YES		18 00				NO	CO	
16" Ferndale - Allen	90	Final	16,050 22 26	16 3	DEF00	1 63		28 2	12 30	Def 87442'	LFERW	22-Jun-00	AF/MW	21.24	22 20	23 000	Rock Dent, Minor Gouge/CracKs	DG	NO	1.7		YES	NO		YES	CO	SCHOOL
16" Ferndale - Allen	100	Final	16,860 43 48	17 1	DEF00	1 25		16 7	12 30	Dent	LFERW	19-Jun-00	AF	43 13	43 55	10 200	Dent PSP 210 gouge/crack	DC	NO	1.3		YES	YES	94	YES	CO	
16" Ferndale - Allen	110	Final	18,400 08 47	18 8	DEF00	0 63		13 3	12 30	Dent	LFERW	19-Jun-00	AF	08 09	08 55	11 000	Dent P2P 100 gouge/crack	DC	NO	0 6		YES	YES	93	YES	CO	
16" Ferndale - Allen	120	Final	19,390 47 97	19 8	DEF00	0 63		10 2	9 00	Dent	LFERW	21-Jun-00	AF	08 83	09 00	9 000	Minor Plain dent, mill related	DP	NO	0 4		NO	NO		YES	RC	
16" Ferndale - Allen	125	Final	20,430 38 20	20 8	UT00		30 00	4 2	8 30		LFERW	24-Oct-00	AF/KG	39 89	39 88	4 500	External Corrosion Wall Loss	CP	NO		28 39				NO	CS	
16" Ferndale - Allen	130	Final	20,430 41 32	20 8	UT00		53 30	4 9	8 30	Internal,poss scab with ml (SO)	LFERW	24-Oct-00	AF/KG	41.07	41 17	2 250	External Corrosion Wall Loss	CP	NO		37 85				NO	CO	
16" Ferndale - Allen	135	Final	21370 40 8	21 7	NA						LFERW	27-Oct-00	KG	36.42	41 54	123 000	Gouges	MO	NO		4.70				NO	CO	Low Cvr on Hill
16" Ferndale - Allen	140	Final	21,420 27 21	21 7	DEF00	1 13		18 3	11 30	Dent	LFERW	20-Jun-00	AF	27.20	27 35	3 500	Dent P2P 270 with Gouge/CK	DC	NO	1 7		YES	YES	86	YES	CO	
16" Ferndale - Allen	145	Final	22,880 01 19	22 9	DEF00	0 63		1 7	1 00	Dent	HFERW	27-Oct-00	AF/KG	01 00	01 21	5 000	Dent P2P 120	DP	NO	0 8		NO	NO		YES	CS	
16" Ferndale - Allen	150	Final	23,810 42 21	23 8	DEF00	1 38		40 8	1 00	Dent	HFERW	21-Jun-00	AF	41 81	42 08	8 600	Dent P2P 220 Gouge adj	DP	NO	1 4		NO	NO	94 2	YES	CO	
16" Ferndale - Allen	155	Final	24,750 11 61	24 7	UT00		20 00	7 8	6 30	External	HFERW	4-Dec-00	AF/MM	11.58	11 86	2 000	External Corrosion Wall Loss	CP	NO		20 06				YES	RC	Creek
16" Ferndale - Allen	157	Final	25,110 07 24	25 2	DEF00	0 60		69 1	1	Dent	HFERW	28-Oct-00	AF/KG	-02.71	04 79	180 000	Dents P2P 160	DG	NO	1.0		YES	NO		NO	CO	
16" Ferndale - Allen	158	Final	25220 22 61	25 8	DEF00	1.00		3 1	1	Dent	HFERW	28-Oct-00	AF/KG	22 33	22 54	5 000	Dents P2P 200	DC	NO	1 4		YES	YES		NO	CO	
16" Ferndale - Allen	160	Final	25,350 09 25	25 5	DEF00	2 38		17.4	2 30	Possibly 2 Dents/Def. 136119'	HFERW	6-Jun-00	MW	08.74	09 20	11 000	Dent areas, Gouges, Cracks	DC	NO	1 4		YES	YES	84	YES	CO	160/170 same joint
16" Ferndale - Allen	170	Final	25,350 09 25	25 5	DEF00	2 38		3 6	2 00	Dent	HFERW	6-Jun-00	MW	08.99	09 20	5 000	Dent areas, Gouges, Cracks	DC	NO	2 9		YES	YES	84	YES	CO	160/170 same joint
16" Ferndale - Allen	180	Final	25,540 58 38	25 8	UT00		23.10	0 6	3 00	UT LAMS	HFERW	3-Nov-00	AF/MM	57 01	57 67	15 750	lamination	LA	NO						YES	CO	Lam @ 86% wall 170"/science CO
16" Ferndale - Allen	190	Final	25,820 58 76	26 1	DEF00	1 19	25 70	15.1	12 30	Dent	HFERW	6-Jun-00	MW	57.44	58 00	13 500	Dent with gouge and cracking	DC	NO	1 3		YES	YES		NO	CO	Sara Spence
16" Ferndale - Allen	200	Final	25,850 64 08	26 1	DEF00	0 69		5 8	12 30	Dent	HFERW	7-Jun-00	MW	63 19	63 33	3 250	Dent with gouge and cracking	DC	NO	0 8		YES	YES		NO	CO	Sara Spence
16" Ferndale - Allen	210	Final	26,530 63 86	27 0	DEF00	2 00		39	1 00	Def 144181'	HFERW	6-Jun-00	MW	60.43	63 17	65 840	9 Locations ove 5 34 axial - DGC	DC	YES	2 3		YES	YES	87 5	YES	CO	
16" Ferndale - Allen	211	Final	26,530 63 86	27 0	DEF00	2 19		15 9	1 00	Dent	HFERW	7-Jun-00	MW	61 43	64 17	65 840	10 Locations ove 5 34 axial - DGC	DC	YES	2 3		YES	YES	87.5	YES	CO	
16" Ferndale - Allen	212	Final	26,530 63 86	27 0	DEF00	2 13		3 8	1 00	Dent	HFERW	8-Jun-00	MW	62 43	65 17	65 840	11 Locations ove 5 34 axial - DGC	DC	YES	2 3		YES	YES	87 5	YES	CO	
16" Ferndale - Allen	220	Final	41,570 33 15	41 5	DEF00	2 88		4	12 30	Possible Attachment	HFERW	21-Nov-00	AF/MM	32 52	32 75	5 500	Dent with gouge	DG	NO	3 3		YES	NO		NO	TS	CS
16" Ferndale - Allen	231	Final	41,610 47 36	41 5	DEF00	0 69		6 8	12 30	Dent	HFERW	21-Nov-00	AF/MM	47.08	47 20	3 000	Dent with gouge	DG	NO	0 6		YES	NO		NO	TS	CS
16" Ferndale - Allen	232	Final	41,610 49 67	41 5	DEF00	0 94		55 6	3 00	Possible bulge from bend	HFERW	21-Nov-00	AF/MM	48 71	49 21	60 000	Dent with gouge and cracking	DC	NO	1 3		YES	YES		NO	TS	CS
16" Ferndale - Allen	233	Final	41,610 54 42	41 5	DEF00	1 00		5 6	2 30	Dent	HFERW	21-Nov-00	AF/MM	54 02	54 29	6 500	Dent with gouge and cracking	DC	NO	1.3		YES	YES		NO	TS	CS

Key to ILI Inspection tools

MFL00 Tuboscope Magnetic Flux Leakage In-Line Inspection Tool - Run on _____ (exact date)

DEF00 Tuboscope Deformation In-Line Inspection Tool - Run on _____

CAL00 Enduro Caliper In-Line Inspection Tool - Run on _____

UT00 PII (Pipeline Integrity International) Ultrasonic Wall Thickness In-Line Inspection Tool - Run on

EGP01 H Rosen Electronic Geometry Pig In-Line Inspection Tool - Run on _____

EXHIBIT 4

Third Party Damage Prevention Program

Table of Contents

I. Definitions ..... Page 1

II. One-Call Systems ..... Page 1

- A. Purpose
- B. Participation in One-Call Systems
- C. Receiving Notification of Planned Excavations
- D. Recording of Notifications
- E. Notification to the Excavator

III. Physical, On-Site Inspection and Monitoring ..... Page 4

IV. Visual Inspection ..... Page 5

- A. Purpose
- B. Aerial Pipeline Patrol
- C. Ground Patrol
- D. Reportable Conditions Observed On Aerial Pipeline Patrol Flights and Ground Patrols
- E. Aerial Patrol Reportable Observances
- F. Ground Patrol Reportable Observances

V. Other Damage Prevention Activities ..... Page 9

- A. Purpose
- B. Excavator Tracking
- C. Pipeline Markers
- D. Locations for Pipeline Markers
- E. Other Signs and Marking Practices
- F. Maintenance of Markers and Signs
- G. Mailings to Excavators

VI. Record Keeping ..... Page 12

VII. Attachments ..... Page 13

I. DEFINITIONS

A. "Excavation Activity" shall mean digging, deep plowing, blasting, boring, directional drilling, other trench-less excavation methods, clearing, grading, ditching, tunneling, dredging, back-filling, the removal of above-ground structures by either explosive or mechanical means, and other earth moving operations.

B. "Excavator" shall mean any person or entity engaging in Excavation Activity.

C. "Field Representative" shall mean an Olympic employee or contractor responsible for complying with specified requirements of this Program.

D. "Paragraph" shall mean a portion of this Program identified by a capitalized letter.

E. "Program" shall mean this Third Party Damage Prevention Program.

F. "Reach" shall mean the maximum known limit of control, or point to which the cutting edge of mechanized equipment, including attachments, is capable of extending.

G. "Section" shall mean a portion of this Program identified by a capitalized Roman numeral.

H. "Subparagraph" shall mean a portion of this Program identified by an Arabic numeral.

II. ONE-CALL SYSTEMS

A. Purpose

The purpose of the One-Call System is to prevent damage to the Pipeline from Excavation Activity by:

1. receiving, recording, and responding to notification of excavation;

2. marking the location of the Pipeline;

3. educating excavators and the public about how to locate, and avoid damaging the Pipeline; and

4. maintaining a database of excavators.

B. Participation in One-Call Systems

Olympic shall maintain memberships in qualified One-Call Systems in the states of Washington and Oregon. The activities described below shall be performed either through the One-Call System or by Olympic to minimize the likelihood of damage due to excavation activities.

1. Receive and record notifications of pending excavations.

2. Communicate marking information and method of marking to the excavator who gave notice to dig. Flagging shall be yellow in color per the uniform color code for oil and gas facilities.

3. Temporary marking of the Pipeline:

   a. When a notification from a One-Call System is received, it is the responsibility of the Field Representative to have the pipeline location identified and marked in the field if required by this Program.

   b. Marking shall be in accordance with the guidelines established by the One-Call System or state law. For example, petroleum pipelines should be marked in yellow, whereas water pipelines should be marked in blue.

   c. The pipeline shall be field located within the time requested or the time specified by the One-Call System or state law for Washington and Oregon. Also, within the limitations of equipment reasonably available, Olympic shall determine the depth of the Pipeline and, once on site to observe the excavation, shall communicate that information to the Excavator before any Excavation Activity.

C. Receiving Notification of Planned Excavations

1. After receiving notification from a One-Call System, Olympic shall review the information to determine the proximity of the Excavation Activity to the Pipeline. Excavation Activity taking place within 100 feet of any portion of the Pipeline shall be communicated to the appropriate Olympic personnel and contract damage prevention representatives. The Field Representative shall ensure that the Pipeline is marked to comply with the applicable requirements of the applicable One-Call System, state law, and this Program.

2. Direct notification of Excavation Activity should be discouraged. That is, all Excavators should be directed to call the One-Call System whenever they need the Pipeline marked. Excavators who call Olympic directly should be advised to call the appropriate State One-Call System. Olympic shall document Excavators refusing to use the One-Call Systems or excavators identified working without having called the One-Call System. Olympic shall send follow-up letters to those excavators explaining the state laws requiring usage of the One-Call Systems.

D. Recording of Notifications

1. Olympic shall ensure that all notifications of Excavation Activity within 100 feet of any portion of the Pipeline are recorded and provided to EPA or the Independent Monitoring Contractor on request.

2. The recording system shall have the capability of retrieving a notification by date, time, and place.

3. The requirements in Subparagraphs 1 and 2 of this Paragraph may be considered fulfilled if the One-Call System provides this service, provided that Olympic has access to the service and that EPA and the Independent Monitoring Contractor can obtain the information from Olympic.

4. If the One-Call System does not provide this service, Olympic shall maintain records of all notifications received. Records of notifications shall be retained from the effective date of the Consent Decree until 6 years after termination of the Consent Decree.

E. Notification to the Excavator

1. If, by any means, Olympic becomes aware of Excavation Activity within 100 feet of any portion of the Pipeline, Olympic shall immediately notify the Excavator that the Excavation Activity is near the Pipeline and that the Pipeline has been, or will be, field located. If Olympic has not field located the Pipeline at the time of the notification, Olympic shall inform the Excavator of the date by which the Pipeline will be field located, and then provide the Excavator with information about the location of the Pipeline by the date promised. Within 7 days after completing each task, Olympic shall document all notifications to Excavators and temporary marking of the Pipeline.

2. If Olympic receives a request to field locate the Pipeline for Excavation Activity over 100 feet from the Pipeline, Olympic is not required to contact the Excavator unless state laws requires a response to the request.

III. PHYSICAL, ON-SITE INSPECTION AND MONITORING

A. For all Excavation Activity within 100 feet of any portion of the Pipeline of which Olympic or its contractors either knows or should know through a One-Call System, patrolling, observation, or any other means, Olympic shall dispatch a Field Representative to conduct a field inspection at the location of the Excavation Activity. During the field inspection, the Field Representative shall (1) obtain, if possible, a schedule, preferably written, of all Excavation Activity planned by the Excavator; (2) assist in identifying the location of the pipeline during excavation; (3) inspect the Pipeline when it is exposed, to determine what measures may be needed to protect and support the Pipeline during construction; and (4) promptly begin emergency response actions if the Pipeline is damaged.

B. Except where the Pipeline can be effectively isolated from Excavation Activity, the Field Representative shall be physically present at, and continuously monitor the excavation site while Excavation Activity is occurring whenever:

1. Excavation Activity occurs within 10 feet of any portion of the Pipeline.

2. The Reach of mechanized equipment from its planned location, or other actual location known to Olympic, is capable of extending to a point less than or equal to 10 feet from any portion of the Pipeline. This requires the Field Representative to evaluate both the type and Reach of equipment being used and the specific location of the planned excavation.

3. For all Excavation Activity for which continuous physical monitoring is not required pursuant to this Paragraph, the Field Representative shall conduct an on-site inspection and evaluation of the Excavation Activity at least once every 7 days to determine whether continuous physical monitoring has become necessary.

4. The Field Representative shall prepare a written report of each field inspection and each day of continuous physical monitoring required by this Paragraph within 7 days of each field inspection or each day of continuous physical monitoring on the Excavator/Locator Orientation Form attached to this Program as Attachment A.

IV. VISUAL INSPECTION

A. Purpose

The purpose of visual inspections is to inspect the Pipeline for encroachments, leaks, exposed pipe, pipe damage, and nearby Excavation Activity, and to identify what corrective action may be necessary.

B. Aerial Pipeline Patrol

1. Attachment B is the Aerial/Ground Patrol Report that shall be used to record each aerial pipeline patrol flight over the Pipeline system. On the Report, each line segment and the day it was inspected shall be recorded along with any information related to observations needing attention as defined in Paragraph D of this Section. Comments on lines missed and any other problems preventing visual inspection of portions of the Pipeline shall be documented on the Report.

2. Olympic shall schedule and conduct all aerial patrol flights so that all portions of the Pipeline will be visually inspected at intervals not exceeding 3 weeks but at least 26 times each calendar year. Applicable governmental regulations relative to air traffic shall be strictly followed on all flights. Safety shall be the first and most important consideration in planning and conducting flights.

3. The patrol pilot shall notify area personnel when the aircraft is entering or leaving the area, when possible, and shall report his location at the end of each flight to a predetermined headquarters or control center.

4. At the end of each week, the patrol pilot shall mail a copy or electronically submit the Report to the appropriate office to maintain an "Office of Record" file for possible review by EPA and the Independent Monitoring Contractor, or other authorized state or federal government agencies.

C. Ground Patrol

1. Ground Patrol is required to inspect the right of way in areas that cannot be covered by aerial patrol due to federal regulations concerning flight paths, flying heights, etc., or in densely populated or highly industrialized areas where adequate aerial inspection cannot be performed.

2. Olympic shall conduct ground patrol, where required, at intervals not exceeding 3 weeks, but at least 26 times a year.

3. A log of each ground patrol shall be kept.

4. Reportable observances, defined in Paragraph D of this Section, shall be documented and submitted to the appropriate field location using either an electronic or paper copy similar to the Aerial/Ground Reportable Observances Report (Attachment C).

D. Reportable Conditions Observed On Aerial Pipeline Patrol Flights and Ground Patrols

1. Patrollers shall look for the conditions described below and, if observed during aerial pipeline patrols and ground patrols, prepare a written report of findings on the Aerial/Ground Reportable Observances Report (Attachment C):

   a. oil spots, stains, stressed or dead vegetation, or other possible evidence of leaks;

   b. oil on surface of waters on or near the right-of-way;

   c. fires of any nature on or near the right-of-way;

   d. Excavation Activity, and the presence of excavation equipment within 100 feet of any portion of the Pipeline;

   e. exposed pipe;

   f. obstructed right-of-way;

   g. inadequate aerial milepost markers;

   h. damage or possible threat of damage on or adjacent to right-of-way caused by erosion, floods, storms, dumping, drainage washouts, ponds, slush pits, etc. ;

   i. dead or mired livestock on or adjacent to the right-of-way;

   j. unusual conditions of rivers, creeks, overhead pipeline spans, and pipeline water crossings of any type; and

   k. condition of station, oil inside tank dike, standing oil or water on the floating roof, or other obvious problems with the tank or surrounding area.

2. Many changes along the right-of-way are gradual and may take several years to reach stages that require maintenance work. Soil erosion, streambed changes, weathering of pipeline markers and signs, and growth of brush and trees on right of way are examples. Individuals performing the patrols should be cognizant of gradual changes and document such observances.

3. Finding leaks, reporting their location, and estimating their size and nature are a prime responsibility of the patroller. As directed by area personnel or the Control Center, the patroller shall make special trips to find leaks suspected or indicated by drops in pressure and flow, meter readings, or other data. The patroller shall also assist maintenance personnel, when requested, in directing them to leak sites and in determining the scope, magnitude, and direction of the outages.

E. Aerial Patrol Reportable Observances

1. Action By Aerial Patroller

   a. Immediately after observing reportable conditions, the aerial patroller shall contact the Renton Control Center, and others as appropriate, to report leaks, Excavation Activity, or other conditions requiring investigation. When an aerial patroller spots activity of immediate danger to the Pipeline, he should attract the attention of the party creating the danger by using his loudspeaker and advise them of the danger. If a loudspeaker system is unavailable, the aerial patroller shall attract the party's attention by continuing to circle the area. Olympic personnel shall be notified and dispatched as soon as possible.

   b. Within 48 hours after each reportable observance that requires a written report, the aerial patroller shall complete the Aerial/Ground Reportable Observances Report with the maintenance team. The report number recorded on this form shall also be recorded on the Aerial/Ground Patrol Report.

2. Action by Maintenance Personnel

   a. Within 48 hours after the aerial patroller notifies maintenance personnel of a reportable observance, or sooner if the condition poses an immediate threat of a release, the maintenance personnel shall inspect the area, and perform any necessary and practicable corrective action.

b. When circumstances are urgent, a report shall be submitted immediately to the Renton Control Center, and others as appropriate, of the conditions found and corrective action taken.

c. Within 7 days after either completing any corrective action or determining that corrective action is not necessary, an Aerial/Ground Reportable Observances Report shall be completed to show the field response, date, name of person making investigation, and who was contacted (name and address).

F. Ground Patrol Reportable Observances

1. Action by Ground Patroller

a. Immediately after observing reportable conditions, the ground patroller shall contact the Renton Control Center, and others as appropriate, to report leaks, Excavation Activity, or other conditions requiring further investigation. When a ground patroller observes activity of immediate danger to the Pipeline, he shall notify the party creating the danger.

b. Within 48 hours after each reportable observance that requires a written report, the ground patroller shall complete the appropriate paper copy or electronic form of the Aerial/Ground Reportable Observances Report (Attachment C).

2. Action by Maintenance Personnel

a. Within 48 hours after the ground patroller notifies maintenance personnel of a reportable observance, or sooner if the condition poses an immediate threat of a release, the maintenance personnel shall inspect the area, and perform any necessary and practicable corrective action.

b. When circumstances are urgent, a report shall be submitted immediately to the area office of the conditions found and corrective action taken.

c. Within 7 days after either completing any corrective action or determining that corrective action is not necessary, the Aerial/Ground Patrol Report shall be completed to show the field response, date, name of person making investigation, and who was contacted (name and address).

V. OTHER DAMAGE PREVENTION ACTIVITIES

A. Purpose

The purpose of this Section is to describe the requirements of this Program relating to:

1. documenting Excavation Activity of Excavators that do not utilize the state One-Call System;

2. identifying the location of the Pipeline through the use of pipeline markers and clear right-of-ways;

3. providing a 24-hour emergency phone number; and

4. providing educational material regarding how to conduct Excavation Activity safely.

B. Excavator Tracking

Olympic shall document Excavators found not using the state One-Call System and prioritize them as Excavators that have a higher probability of causing damage. In a given area, there may be certain types of Excavators that are not getting the "Call Before You Dig" message. Based on local experience, if the type of Excavator most likely to cause damage is known, Olympic shall send educational information to, and/or conduct face-to-face meetings with, those Excavators to promote the use of the One-Call System and safe digging practices.

C. Pipeline Markers

Olympic's right-of-way and crossings shall be marked in accordance with ASME B31.4-2002 requirements to indicate the presence of the Pipeline to the public, contractors, and other outside agencies; facilitate aerial patrol; and guide Olympic personnel and contractors engaged in maintenance and operating activities.

1. Type and Placement. Markers with warning signs shall be installed to indicate the presence of a buried pipeline. The markers shall be installed over the Pipeline, if practicable, or as close to it as possible. Markers shall be installed in a manner that prevents damage to the pipe or its coating.

2. Posts. Posts may be made of steel, aluminum, reinforced concrete, wood, fiberglass, or other materials that will insure adequate strength, stiffness,

and durability. Protection of the posts against below-ground corrosion or weathering shall be provided, as necessary. Vent pipe, aerial patrol markers, or milepost markers may be used as posts for installing pipeline warning signs.

3. Pipeline Warning Signs

a. Pipeline warning signs shall be made of strong, durable material and finished to resist the effects of weathering. These signs should state at least the following: "WARNING" followed by the words "PETROLEUM PIPELINE" in lettering at least one inch high with an approximate stroke of 1/4 inch on a background of sharply contrasting color.

b. Pipeline warning signs also shall contain the name of Olympic Pipe Line Company and a telephone number (including area code) where Olympic can be reached at all times.

D. Locations For Pipeline Markers

1. In areas of high Excavation Activity, markers shall be placed so that at any place on the right-of-way in that area two markers are visible along the right-of-way.

2. Heavily Developed Areas. Where the placement of standard pipeline warning signs is impracticable, the presence of the Pipeline may be indicated by stenciled markings, cast monuments, plaques, signs, or other devices installed in curbs, sidewalks, streets, building facades, or wherever else practicable.

3. Highways, Roads, Railroads, and Stream/River Crossings Along the Pipeline Route.

a. Permanent pipeline markers shall be located at each public road crossing, railroad crossing, and stream/River crossing, and in sufficient numbers along the remainder of each buried pipeline so that its location is accurately known.

b. Markers shall be sufficiently elevated above grade to allow them to be clearly viewed from a distance and to remain visible above normal vegetation or snow accumulations.

c. Markers shall normally be placed on locations where they will not interfere with normal right of way maintenance or use of the land by its owners. Markers may be placed at fence lines, property lines, right of way boundaries, and in open areas where the party exerting control over the surface use of the right of way will permit such installations.

4. Special Locations. Markers shall be installed at locations where the Pipeline is above ground and is accessible to the public. Aerial crossings on any type of structure, either publicly or privately owned, should be considered as being accessible to the public. Markers shall be placed on each side of any impoundment that is an active source of water supply.

E. Other Signs And Marking Practices

1. Signs around Pumping Stations and Breakout Tank Areas

a. Permanent signs shall be located and posted in sufficient numbers around pumping stations and breakout tank areas to ensure that at least one sign is visible to the public at any place around the station/area.

b. Signs shall be made of strong, durable material and finished to resist the effects of exposure and vandalism. These signs must have the Olympic Pipe Line Company name and an emergency telephone number. Pipeline warning signs may be used for this purpose.

2. Aerial Milepost Markers

a. Aerial milepost markers shall be installed and maintained at intervals no greater than five miles and shall be used as reference points to establish and report the approximate milepost locations of leaks or other reportable observances.

b. The aerial milepost markers are usually installed in fence lines, property lines, or right-of-way boundaries. The faces of the signs are placed perpendicular to the route of the Pipeline.

3. Olympic shall use sharply contrasting colors unique to the Pipeline System to mark the Pipeline by means such as painting, banding, and applying decals.

   a. Posts. Fence posts, mileposts, and markers shall be painted in sharply contrasting colors unique to the Pipeline System.

   b. Casing Vent Pipes at Highway and Railroad Crossings. Casing vent pipes at highway and railroad crossings shall be painted with the contrasting color scheme utilized on the Pipeline System.

   c. Other Structures. Other appurtenances or facilities on the right-of-way, where possible and appropriate, shall be painted to conform with the color scheme unique to the Pipeline System.

F. Maintenance Of Markers And Signs

Maintenance of markers and signs shall be a part of the Olympic's regular maintenance procedures. Olympic shall maintain signs, along with their supporting structures in their original state of effectiveness. Olympic shall replace damaged or defaced signs on discovery or as soon as possible. Markers shall not be obscured by vegetation. Markers whose effectiveness has been compromised by construction or development shall be relocated to restore effective marking.

G. Mailings to Excavators

Olympic shall send mailers with the "Call Before You Dig" message and general information about the location of the Pipeline to Excavators at least once a year. Olympic shall contact the state One-Call System to obtain a database of Excavators. Olympic shall include on its mailing list Excavators who previously contacted Olympic directly and shall make reasonable efforts to include other potential Excavators in the counties where the Pipeline is located. Olympic shall keep a record of the Excavators who were sent a mailer and the date when the mailers were sent.

VI. RECORD KEEPING

All records created pursuant to this Program shall be retained from the Effective Date of the Consent Decree until 6 years after termination of the Consent Decree.

VII. ATTACHMENTS

The following attachments are attached to, and incorporated into, this Exhibit:

"Attachment A" is Olympic's Excavator/Locator Orientation Form.

"Attachment B" is Olympic's Aerial/Ground Patrol Report.

"Attachment C" is Olympic's Aerial/Ground Reportable Observances Report.

A

ATTACHMENT A
EXCAVATOR/LOCATOR ORIENTATION FORM

Information noted on this form is intended to communicate general information about our pipeline(s) and is not to be relied upon by any party for the purpose of excavation or any similar purpose.

By law, the **One Call Center** in your state should be notified of proposed excavation to enable all participating utilities to mark their respective lines. Olympic Pipe Line Company is a member of this one-call enterprise and will automatically be notified through this system.

- ☐ Understand Excavator's intention (i.e. Pipeline Right-of-Way paralleled, crossed once crossed multiple times?) and extent of work area.
- ☐ Communicate Pipeline routing throughout the entire work area.
- ☐ Discussed *approximate* pipeline depth, number of pipelines involved, tolerance zones, casing requirements, hand digging requirements, etc.
- ☐ Discuss pipeline size, *approximate pressure,* and characteristics of product in pipeline.
- ☐ **Any contact** with the pipeline causing a nick or scratch in coating must **be reported to us by the excavator** for further inspection to assure continued safe pipeline operations.
- ☐ Discussed that a company representative must be on site during pipeline excavation and foreign line crossing.
- ☐ Flagged/marked pipeline(s) throughout the entire work area.
- ☐ If the markings are destroyed or needs to be refreshed, call the One-Call Center for remarking.

If you are unable to reach the representative designated below, or in case of an emergency, call our **Renton Control Center at 888-271- 8880** and request assistance by referring to the following information:

Line Segment _____ **Milepost** _____

Lat._____

State One Call
ID Ticket # _____ **GPS Coordinates: Long**_____

Olympic Pipe Line Company Representative:(24 hours minimum notification before beginning work)

Name: _____

Phone: _____

Signature: _____ Date: _____

Landowner/Contractor:

Name: _____

Phone: _____

Signature: _____ Date: _____

Comments / Follow-ups: _____

_____

B

ATTACHMENT B

OLYMPIC PIPE LINE COMPANY

AERIAL/GROUND PATROL REPORT

DOT FILE 195.412 (A)

Month: Year Patroller:

Date	Line Segment	Comp	Not Comp	Comments (Line Missed Make Up. etc.)	Observation Report #

DISTRIBUTE TO: TCC
DISTRICT OFFICE
PATROLLER

C

ATTACHMENT C

Olympic Pipe Line Company

Aerial/Ground Reportable Observances Report

Report No.: Date: Time:	
Patroller:	

Notified (Name):	Location:

How Reported: Radio Loud Speaker

Telephone Other

(Specify):_____

Location:

Leak Information: On Land On Water

Size of Leak: Large Small

Observations:

Field Response:

Who Was Contacted: Name: Address:

Investigated By: Date:

EXHIBIT 5

Management of Change Process

1.0 Introduction:

Managing change is essential for operating in an efficient, safe, and environmentally sound manner. It also makes good business sense as it minimizes losses due to incidents. This document was created to address the Management of Change process for Olympic Pipe Line. The pipeline facilities are not subject to OSHA's Process Safety Management regulations, but the OSHA Management of Change requirements, getting HSE right Expectations and American Petroleum Institute (API) RP 750 were used as guides in developing this document.

This Management of Change (MOC) plan addresses temporary and permanent changes in operations, maintenance, products, chemicals, procedures, facilities, and personnel at Olympic that may impact HSE performance.

2.0 Purpose:

The purpose of the MOC plan is to identify and control the impact and potential hazards associated with change. MOC ensures that the impact of changes which effect the health and safety of personnel or impact the environment are recognized, reviewed, approved, communicated, and documented. All projects require a MOC evaluation and MOC has been incorporated into the Capital Value Process (CVP). MoC process are generally documented in the CVP process for project type work.

3.0 Roles & Responsibilities:

Originator

Individual or group of individuals who have identified a change or a need for a change.

Management

Individual responsible for final authorization of change and serves as gatekeeper throughout the MOC process. (i.e. District Manager, Core/Swat Team Leader, Business Unit Managers, Maintenance/Operations Supervisor, Engineering & Maintenance Team Leader)

MOC Process Leader

Person(s) assigned responsibility for the change which follows the MOC process from pre- to post-change management.

Employee

Employees must understand the definition of change and identify such changes as they are proposed so the change can be managed to prevent incidents.

Reviewer

Reviewers should be knowledgeable, trained and experienced with the equipment, practices, or process changes under consideration anc have a thorough understanding of the MOC process.

4.0 Definitions:

Facility Change
Any technical, mechanical, or procedural change to a facility, including product changes/additions, or any deviation from the documented safe operating limits or procedures. Replacement-in-kind is not considered a change.

Organizational Change
Change in personnel who supervise or operate the facility that leads to a loss or transfer of personnel with specific knowledge, skills or experience. Change in management systems and regulatory/compliance issues are another form of organizational change. Routine personnel vacancies and replacements, rotation, shift changes and administrative changes (e.g. timecard procedures, vacation policy, benefit changes, etc.) should not require institution of the MOC process.

Replacement in Kind
An item (equipment, product, additive, etc.) that meets the design specification of the item it is replacing. Like-for-Like or any other design alternative specifically provided for in the design specification. MOC is not required for replacement in kind changes.

Temporary Change
Any change that will not remain in effect indefinitely. A point in time will be specified when the temporary change will be returned to original conditions. A temporary change is subject to the same review process as a permanent change.

Emergency Change
Action necessary to remedy an emergency situation that poses an imminent impact to health, safety and the environment.

Examples of Replacement in Kind (RIK) and Change can be found in Appendices A & B

5.0 MOC PROCESS

Applications requiring proper management of change vary widely, not only in hazard potential but also with respect to organizational and technical factors. While no single procedure is recommended for universal application, the process to manage each change as required by getting HSE right should address:

- reason for change
- authority for approving changes
- analysis of HSE implications
- acquisition of required permits
- documentation (reviews & post-implementation)
- communication of change to affected parties
- time limitations, especially for temporary changes
- training

In many cases, it is expected that the MOC process will consist of a simple procedure as outlined in the Management of Change Form . The Management of Change Form may be used to document the MOC process for the project.

5.1 Proposal for Change

The process begins when a change is identified. The Originator of the proposed change must clearly communicate to appropriate management a description of the change and reason for the change. Management will evaluate the merits of the change and determine the additional action required to properly address the change, and assign a MOC Process Leader. Input from operations personnel, engineers, contractors, consultants or others should be solicited as appropriate to confirm conceptual basis for change.

5.2 Screening

After the need for a facility or organizational change has been verified, the change must be screened to determine whether it is applicable to the MOC process. The MOC Process Leader will be responsible for making that assessment. Generally, if health, safety, the environment or regulatory compliance is potentially impacted, the MOC process should be employed. Guidelines for identifying applicability to MOC are listed in Appendices A and B .

5.3 Review

When a proposed change has been identified as applicable to MOC, it must be evaluated for potential health, safety, and environmental implications. A review should be conducted to assess hazards associated with physically implementing a change as well as the potentially hazardous effects that the change could have on process, procedures, and personnel. The review should also ensure that all codes, standards, design specifications, compatibility assessments, and generally accepted engineering practices have been met. Applicable reviewers' signatures must be obtained prior to change implementation or start-up.

The MOC Process Leader is responsible for enlisting capable individuals to perform necessary reviews. The number and qualifications of reviewers will depend on the scope of the proposed change. Reviewers are to be experienced with the equipment/practices/process change which is under consideration. If a facility or work group does not employ individuals with the proper training for reviewing the change under consideration, qualified personnel should be enlisted from other sources.

The level of detail for each review should be appropriate for the complexity of the proposed change and for the potential hazards the change poses. A hazard analysis checklist may be prepared for specific installations to verify compliance with standards.

Results of the MOC review process should be adequately documented. The reviewer should provide written record of the review, even if no substantive comments are provided. The review should be documented using the MOC form following the Appendices.

5.4 Authorization

Appropriate Management must authorize the change before implementation. Authorization must be adequately documented. Approval of the proposed change is contingent upon the following pre-implementation action:

- All necessary health, safety, and environmental reviews are completed.
- Hazards/consequences have been addressed.
- Regulatory requirements/approvals have been satisfied.
- All affected personnel have been informed of the change and trained as necessary.
- Documentation of change and review(s) is complete.

5.5 Implementation and Follow-up

Prior to implementation, the change must be properly communicated to affectec parties (i.e. project safety meeting or directly by the supervisor.) Any training requirements should be formally identified and performed at the completion of the change, or prior to implementation of the change. Training shall be documented.

After the change has been implemented, the MOC Process Leader is responsible to verify that the change was performed as intended and that the proper documentation was prepared, drawings revised, procedures updated, regulatory notifications and filings completed, etc.. Necessary documentation of the change will be recorded on the MOC form and change can be communicated through the use of log books, work permits, written summaries, and shift change records.

If the change is temporary, prescribed t me limits must be set. Management will insure that these time limits and any other stipulations of the temporary change are not violated without the proper review process.

5.6 Emergency Changes

In an extreme emergency, it may be necessary to carry out a modification or procedural change before normal MOC procedures can be followed. In these cases, the change shall be permitted only on the verbal authority of designated person in-charge. However, the emergency change should be subjected to the normal MOC procedures at the earliest possible time.

5.7 Record Retention

At a minimum, the MOC form and approvals will be kept at the office of record for the site effected by the change and for unmanned facilities for 5 years unless stipulated otherwise by applicable legal, regulatory, or compliance guidelines.

Appendix A

Replacement-In-Kind (RIK)
RIK changes are changes that use the same size, material, style, type, range, chemicals, control, operation, procedure, etc.. Examples of RIK are as follows:

Valves
Replacement of existing valves with valves of same design capabilities (i.e. pressure rating, materials of construction, nominal size, style, flange facing, block and bleed).

Piping and Flanges
Replacement piping and flanges must have matching nominal size and bore with the piping and flanges being removed. The manufacturer may differ but the weight, wall thickness, material strength, flange rating, facing and materials of construction must be the same.

Pumps and Compressors
Replacement will match the existing equipment in pumping capacity, materials of construction, seal type, suction & discharge rating, flange rating and delta head curve change. Must also have the same environmental standards, e.g. Emission, lubricants, etc..

Electrical
Replacement of a breaker or fuse with one of the same rating. Replacement of wiring with same gauge and current carrying rating. Replacement of insulation.

Electric Motors
Replacement will have matching materials, horsepower, efficiency, voltage rating, RPM, frame size, temperature rise, insulation class, noise rating, and type.

Instrumentation (Electrical/Mechanical)/Safety systems
Instruments/meters with no change in design capabilities or materials of construction. Adjusting operational set points within established operating range. Routine testing and maintenance of safety devices and alarms.

Chemicals
Changing the recommended concentration of a chemical additive, within established parameters. Product name change **without** alteration to composition.

Operations
Variations in operating parameters (flow, pressure, temperature) which are within the limits as described in current standard operating procedures. Changes in operating efficiency does not adversely affect the HSE performance agenda.

Organizational
Reassignment of qualified personnel. Regular crew change. Administrative Policy.

Cathodic Protection
Replacement with matching materials, capacity, corrosion rate, amperage and voltage.

****If change does not fit RIK criteria, go to Appendix B (typical changes)*.***

Appendix B

Below is a listing of typical instances of change that require review through the Management of Change (MOC) process. The list is not all inclusive and serves as a guide in determining the applicability of the MOC review process.

Mechanical

a. Construction of new facilities or equipment (i.e. Tankage, pollution control equipment, etc.).

b. Modification of existing facilities, vehicles, and equipment.

c. Equipment changes that are not replacement-in-kind.

d. Modifications which could cause changes to pressure relief requirements, safety or alarm systems.

e. Bypass connections around equipment normally in service.

Technical

a. Increasing tankage/barge loading throughput or pipeline capacity.

b. Introduction of new or different products, additives, RVP, etc.

c. Significant changes in operating conditions (pressure, temperature, flow rate, etc.).

d. Changes in electrical systems, including PLC, outside of standard operating limits.

Procedural

a. Change in, or new operation or maintenance procedures.

b. Operations outside the scope of current procedures.

c. Changes in Engineering Specification Standards.

d. Change in or new legal, regulatory requirements, company policy or procedure.

Organizational

a. Change in organization or in personnel that supervise or operate a facility.

b. Change in Management System used

MANAGEMENT of CHANGE AUTHORIZATION

FACILITY/LOCATION: MOC Number:

Equip ID/unit no.				
Line Segment:	From:		To:	
Type of Change: Permanent ☐	Temporary ☐	Time Period --	From:	To:
Change requested by: (Originator)			Date initiated:	
Basis / description of change:				
MOC Process Leader Assigned:				

MOC CATEGORY: (check all that apply) Mechanical MOC ☐ Technical MOC ☐ Proceaural MOC ☐ Organizational MOC ☐

REVIEWERS (by Functional Area):	Person Contacted	OK	REJECT	DATE	COMMENTS
Engineering / S & I / ROW					
Health, Safety & Environment / DOT					
Field Operations					
Renton Control Center					
Maintenance - CORE					
Maintenance - SWAT					
Other (Legal, Management, etc.)					

Pre-Implementation Tasks	Yes	N/A	Date Completed:
CVP / ACP Checklist Completed			
Hazard Analysis Performed & Items Resolved			
Impact on Public Health & Safety:			
Other:			

Project Rejected: Yes ☐ No ☐ If yes, reason:

Implementation of change authorized by: (Olympic Supervisor)

Date:

Post-Implementation Tasks	Yes	No	N/A	Date Completed:
Operation & Maintenance Procedures Updated:				
Communication to Affected Parties Completed:				
Training Completed and Documented:				
Safety Start-up Review Completed:				
Update Drawings / Documentation				By:
Other				

Additional Forms or Support Comments: Yes ☐ N/A ☐ Number of Forms:

OFFICE of RECORD:	LOCATION

EXHIBIT 6

Equipment Inspection, Maintenance, and Repair Program

A. Inspection, Maintenance, and Repair of Mainline Valves.

1. **Inspection and cycling.** Olympic shall inspect all mainline valves on the Pipeline System at an interval not exceeding 7½ months but at least twice each calendar year. The inspection shall consist of (1) cycling the valve to verify the operability of the valve and the valve actuator; (2) visually inspecting the general condition of the valve for signs of corrosion, leakage, or any other mechanical problems; (3) inspecting the general housekeeping around the valve; (4) cleaning out the gearbox, servicing the packing, flushing and/or draining valve bottoms as appropriate in accordance with sound engineering practice; and (5) documenting any deficiencies noted and/or maintenance activities performed during the inspection.

2. **Maintenance and repair.** Olympic shall service (lubricate, add/replace valve packing, etc.) all valves and valve operators as appropriate during each inspection in accordance with sound engineering practices. Olympic promptly shall correct deficiencies identified during the inspections by repair or replacement of defective components, or replacement of the valve or valve operator as appropriate in accordance with sound engineering practice. Olympic shall document all corrective actions to address deficiencies within 7 days after completing the corrective action.

B. Inspection, Maintenance and Repair of Control Valves and Control Valve Actuators.

1. **Semi-annual Inspection.** Olympic shall inspect all Control Valves and Control Valve Actuators at an interval not exceeding 7½ months but at least twice each calendar year. The inspection shall consist of (1) cycling the valve to verify the operability of the valve and the valve actuator; (2) visually inspecting the general condition of the valve for signs of corrosion, leakage, or any other mechanical problems; (3) verifying that the actuator is operating within normal operating parameters; (4) Checking for proper operation of the PID controller; (5) lubricating all hydraulic and pneumatic actuators; and (6) documenting any deficiencies noted and or maintenance activities performed during the inspection.

2. **Monthly Inspection.** Olympic shall visually inspect all Control Valves during normal station inspections at least monthly to check for any fluid leaks and the general condition of the valve and the valve actuator.

3. **Maintenance and Repair.** Olympic shall service (lubricate, servicing valve packing, etc) control valves and actuators as appropriate during each inspection in accordance with sound engineering practices. Olympic promptly shall correct deficiencies identified during

the inspections by repair or replacement of defective components, or replacement of the control valve and/or actuator as appropriate in accordance with sound engineering practice. Olympic shall document all corrective actions to address deficiencies within 7 days after completing the corrective action.

C. Inspection and Calibration of Station Pressure Transmitters and Switches.

1. **Monthly Verification.** Olympic shall verify all station remote pressure readings each month by comparing the local reading at the station to those displayed at the control center. If the reading comparison reveals an inconsistency in excess of equipment manufacturer's tolerances, Olympic shall re-calibrate, repair or replace the transducer.

2. **Semiannual Calibration**. Olympic shall calibrate all pressure transducers at an interval not exceeding 7½ months but at least twice each calendar year. The calibration shall consist of (1) checking the wiring connections for mechanical integrity; (2) verifying the 0, 50% and 100% span settings using a calibrated pressure source (e.g., deadweight tester, master gauge, etc.); (3) verifying that local and remote display devices are consistent with the transducer output; (4) verifying that any shutdown or other control device utilized by the transducer is functioning properly; (5) verifying that any local or remote alarm connected to the transducer is functioning properly; and (6) documenting any deficiencies noted and or maintenance activities performed during the calibration. If the transducer cannot be calibrated within the manufacturer's tolerances, Olympic promptly shall repair or replace the transducer.

3. **Pressure Switch Verification.** Olympic shall verify the functionality of all pressure switches at intervals of not exceeding 7½ months but at least twice each year by (1) connecting the switch to a calibrated pressure source; (2) confirming that the switch activates at the design pressure and; (3) verifying that all local and remote alarms associated with the switch are functioning. If the switch fails to function within the manufacturer's tolerances, Olympic shall repair or replace the switch. Olympic shall document repairs or replacement of the pressure switch within 7 days after completing the corrective action.

D. Inspection, Calibration, and Maintenance of Relief Valves

1. **Semiannual Inspection.** Olympic shall exercise and inspect all mainline relief valves at an interval not exceeding 7½ months but at least twice each calendar year. The inspection shall consist of (1) verifying operability of the valve; (2) visually inspecting the general condition of the valve for signs of corrosion, leakage, or any other mechanical problems; (3) verifying the operability of the relief valve flow switch, if applicable, including the remote and/or local annunciation, if applicable; and (4) documenting any deficiencies noted and or maintenance activities performed during the inspection.

2. **Maintenance and Repair.** Olympic shall service (lubricate, servicing valve packing, etc.) relief valves as appropriate during each inspection in accordance with sound engineering practices. Olympic promptly shall correct deficiencies identified during the inspections by repair or replacement of defective components, or replacement of the control valve or actuator appropriate in accordance with sound engineering practices. Olympic shall

document repairs or replacements of relief valves within 7 days after completing the corrective action.

3. **Maintenance Schedule**. Olympic shall schedule all maintenance required above through Olympic's Maintenance Management System. Olympic shall maintain documentation of all maintenance requirements required by the Consent Decree and shall make the documentation available to EPA and the Independent Monitoring Contractor during any physical site visit. Additionally, Olympic shall submit copies of any or all documentation required by this Program within 10 days after the date of a request from either EPA or the Independent Monitoring Contractor. The documentation shall include:

a. date of the inspections or test;
b. name of person who performed the inspection or test;
c. the serial number or other identifier of the pipeline component;
d. results of the inspection or test; and
e. correction of any deficiencies identified during inspection or test.

E. Procedure for Adjusting Pressure Settings.

Olympic's Engineering Department is responsible for calculating the maximum operating discharge pressure of a station and establishing the maximum control and shutdown set points of the Pipeline System.

Olympic shall review annually the Maximum Operating Discharge Pressure of each station. The Engineering Department will issue a letter documenting the review to the Control Center, and the District Manager. Any changes made to operating or control setpoints must be approved through Olympic's Management of Change Process.

Exhibit 7

Controller and Employee Overview Training Program

A. Controller Training

1. At intervals not exceeding 15 months, but at least once each calendar year, all Olympic controllers shall receive training that addresses: (a) operation of the SCADA system under conditions approximating normal, abnormal, and emergency conditions; (b) responding to abnormal and emergency conditions and; (c) start-up and shut down of any part of the Pipeline System.

2. The training required by the preceding Paragraph shall include exercises on a pipeline simulator to test and to verify the controller's knowledge of the SCADA system.

3. Newly hired controllers shall receive the training described in Paragraphs 1 and 2 of this Program before they are allowed to operate any part of the Pipeline System without direct supervision.

4. Olympic shall maintain records of all training related to this Program and shall make the training records available to EPA and the Independent Monitoring Contractor.

5. At intervals not exceeding 15 months, but at least once each calendar year, Olympic shall perform a review of each controller's performance to assess his/her ability to perform the tasks and responsibilities covered by this Program. Furthermore, Olympic shall perform remedial or additional training, as necessary, to address any deficiencies identified in its periodic reviews of its controllers.

B. Employee Overview Training

Within 90 days of the effective date of this Consent Decree, and annually thereafter, Olympic shall perform a review for all employees and managers with responsibility for operating and maintaining the Pipeline System, including controllers, that covers: (1) an overview of the operation and maintenance of the Pipeline System; (2) information to recognize and avoid risks that could result in a spill from the Pipeline System; (3) hazards most frequently encountered during operation of the Pipeline System that may result in an unpermitted discharge of pollutants; (4) the environmental consequences of spills from the Pipeline System; (5) reporting requirements and emergency notification procedures; (6) the procedures related to operation of the Pipeline System and the location where written copies of such procedures are maintained; and (7) the requirements of the Consent Decree.