TODAY'S AND TOMORROW'S EMISSION CONTROL TECHNOLOGIES FOR LARGE MARINE ENGINES

A CONFERENCE ON MARINE VESSELS & AIR QUALITY

San Francisco February 1-2, 2001

Technology

WÄRTSILÄ

Focus of emission reduction research

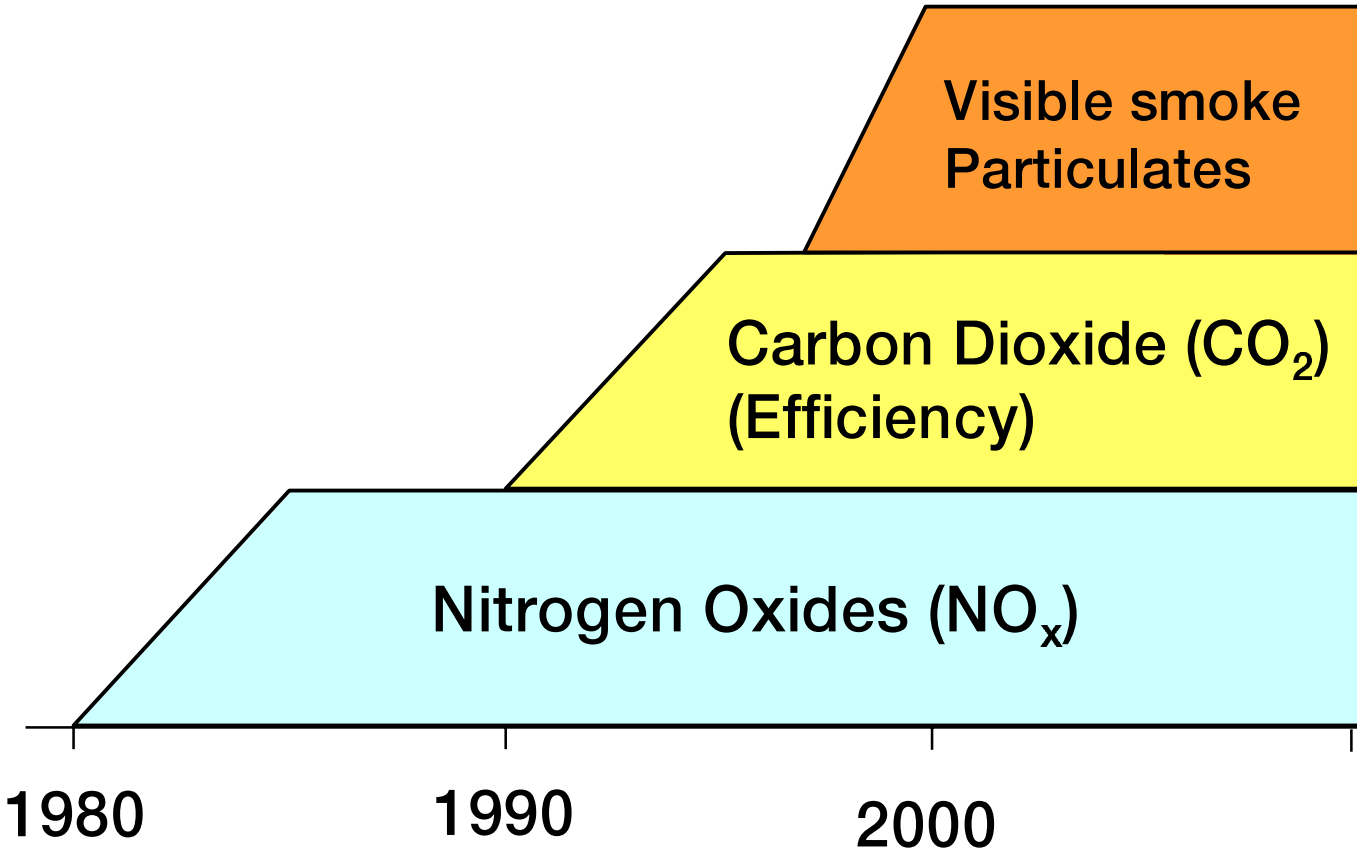

Technology

WÄRTSILÄ

Cruise ship

WÄRTSILÄ

Luxury

Technology

WÄRTSILÄ

Combustion Quality Ingredients

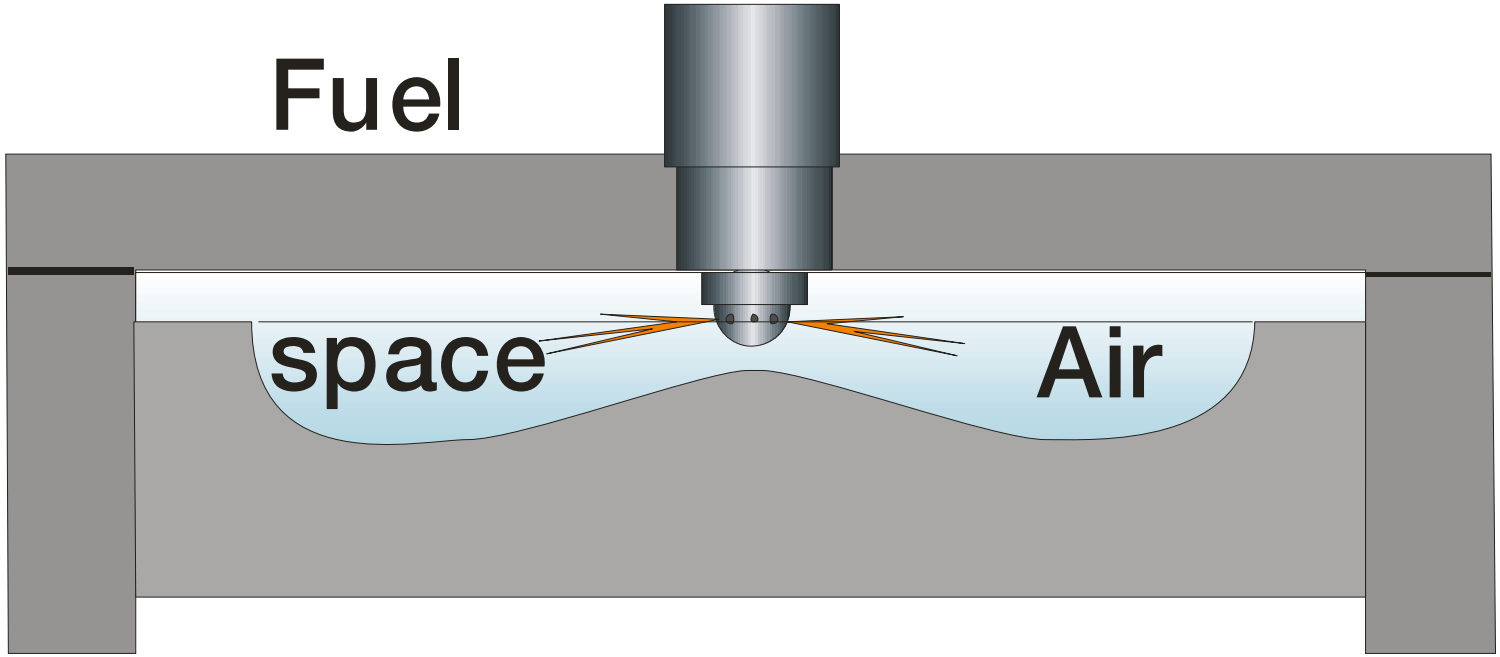

WÄRTSILÄ

Air parameters

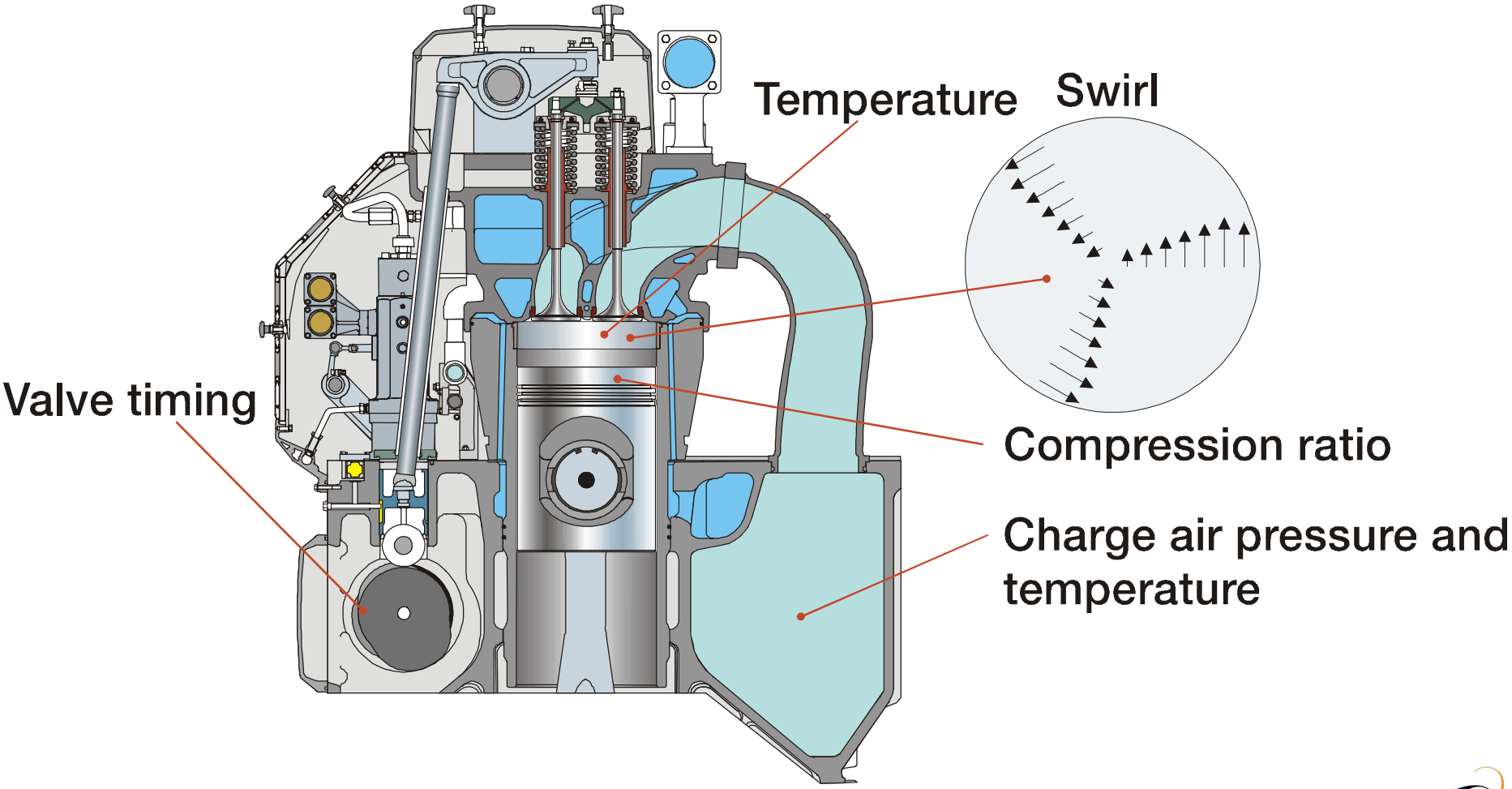

Technology

WÄRTSILÄ

Features of a small droplet

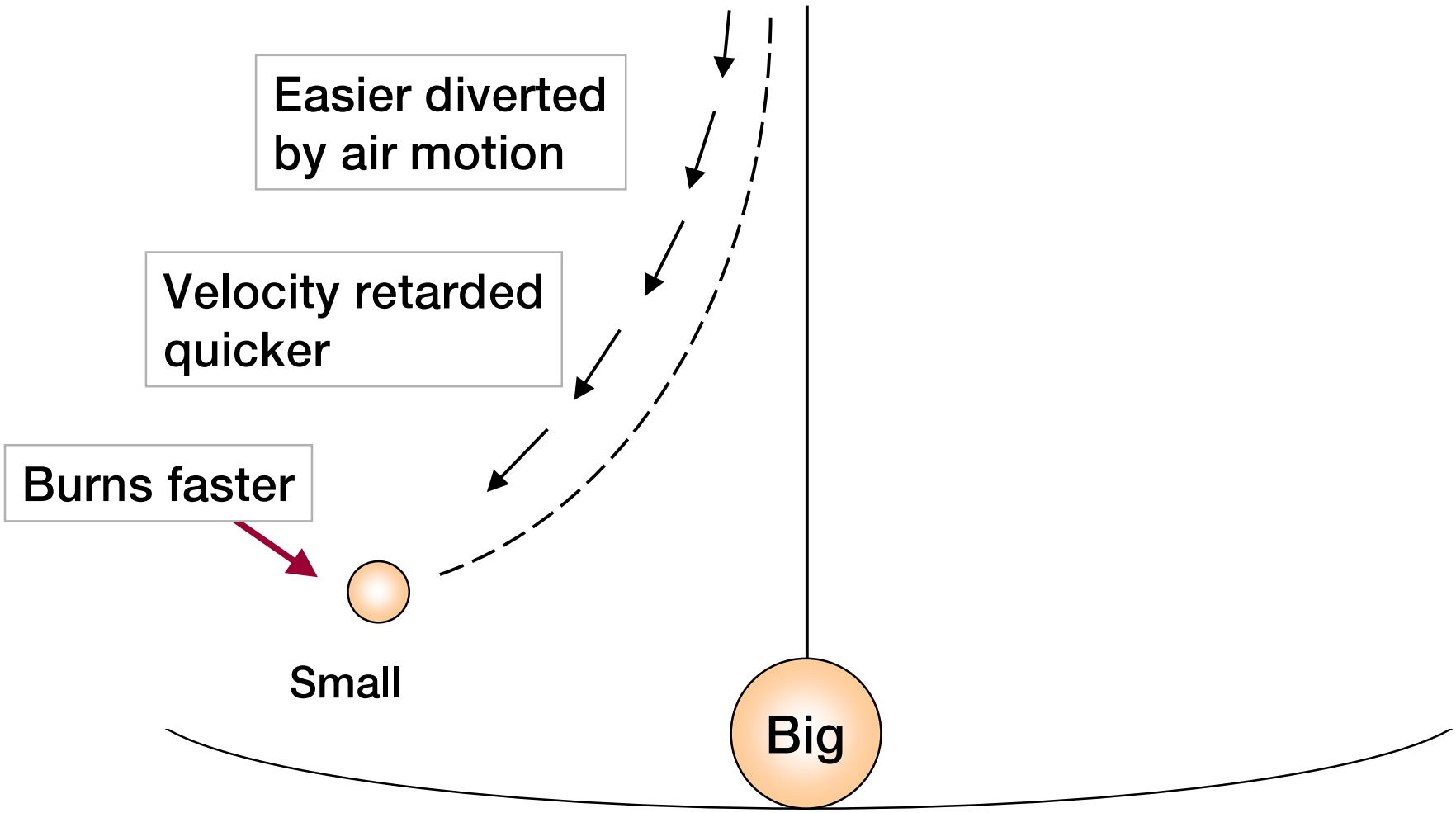

WÄRTSILÄ

Injection pressure possibilities by different systems

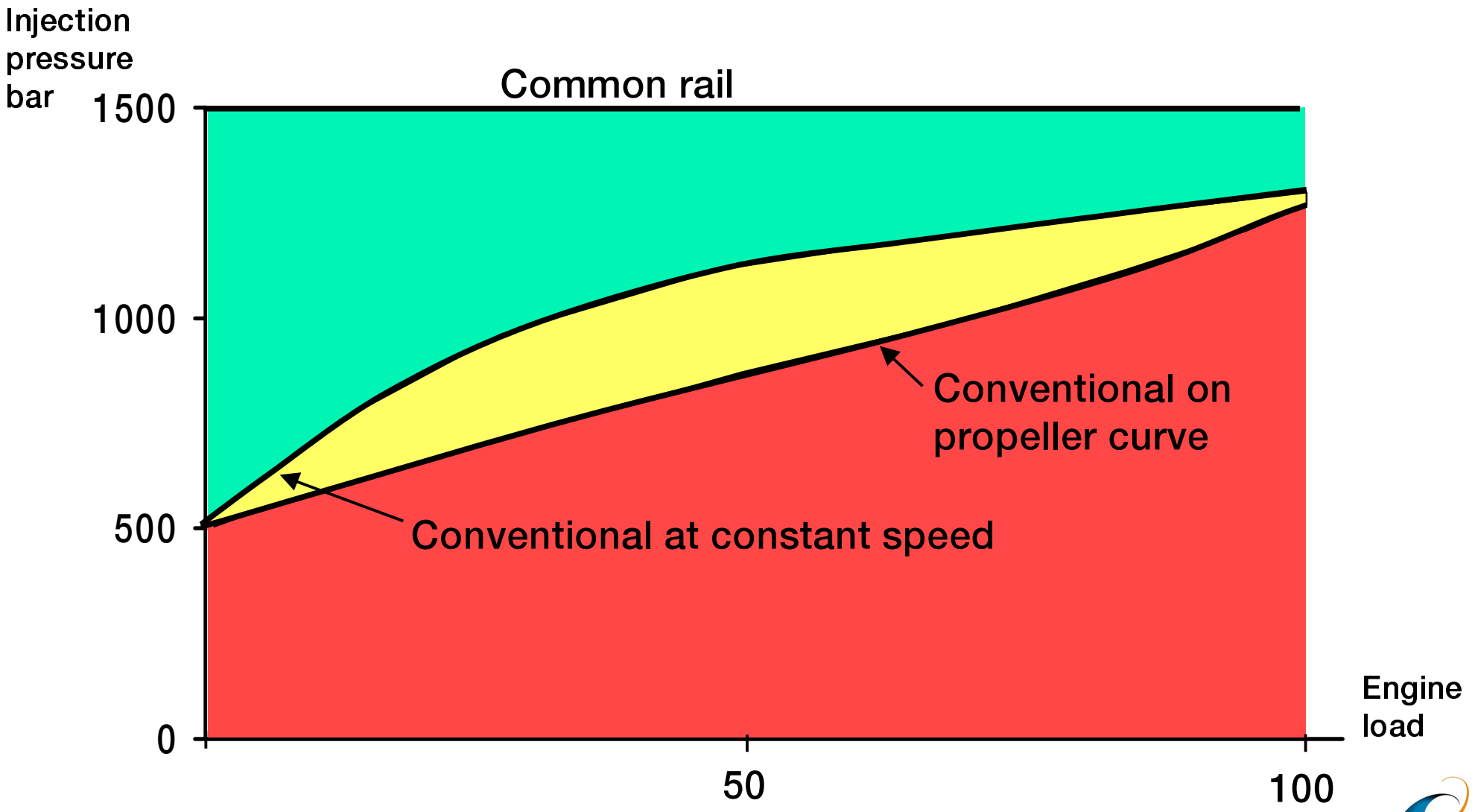

Technology

WÄRTSILÄ

Conventional v common rail injection

Conventional injection system

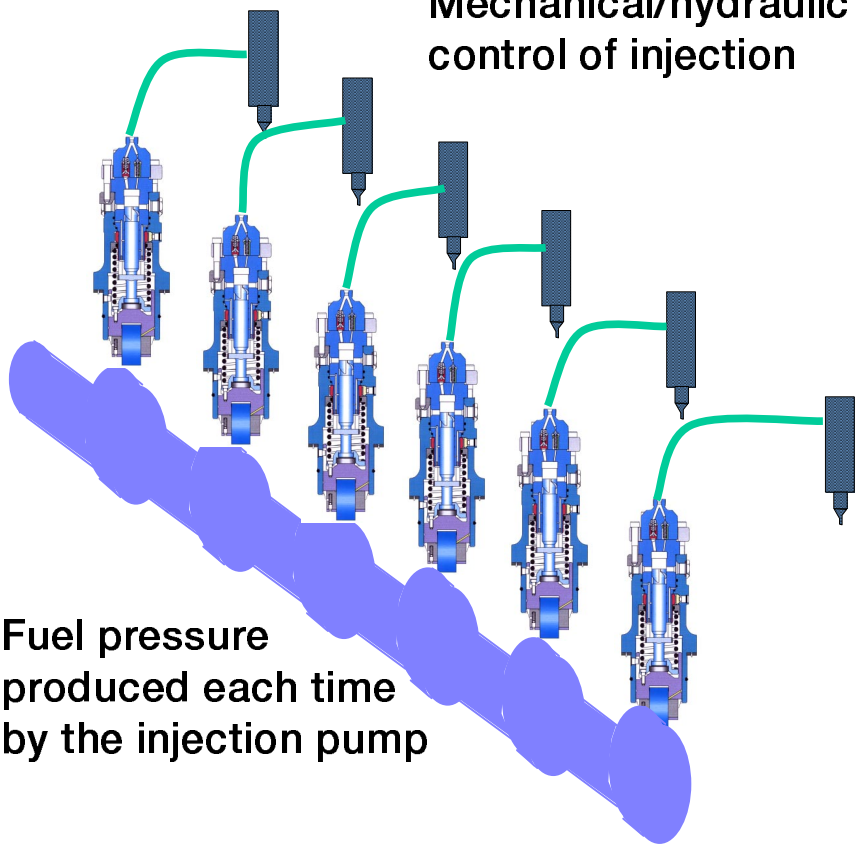

Common rail injection

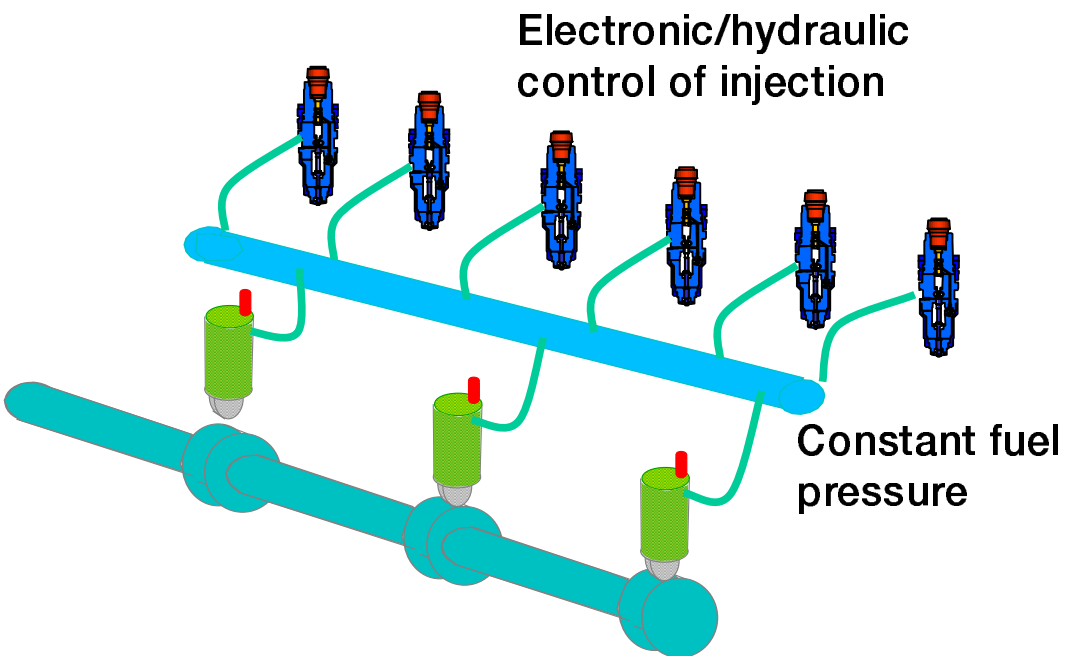

WÄRTSILÄ

Wärtsilä 32 Test results

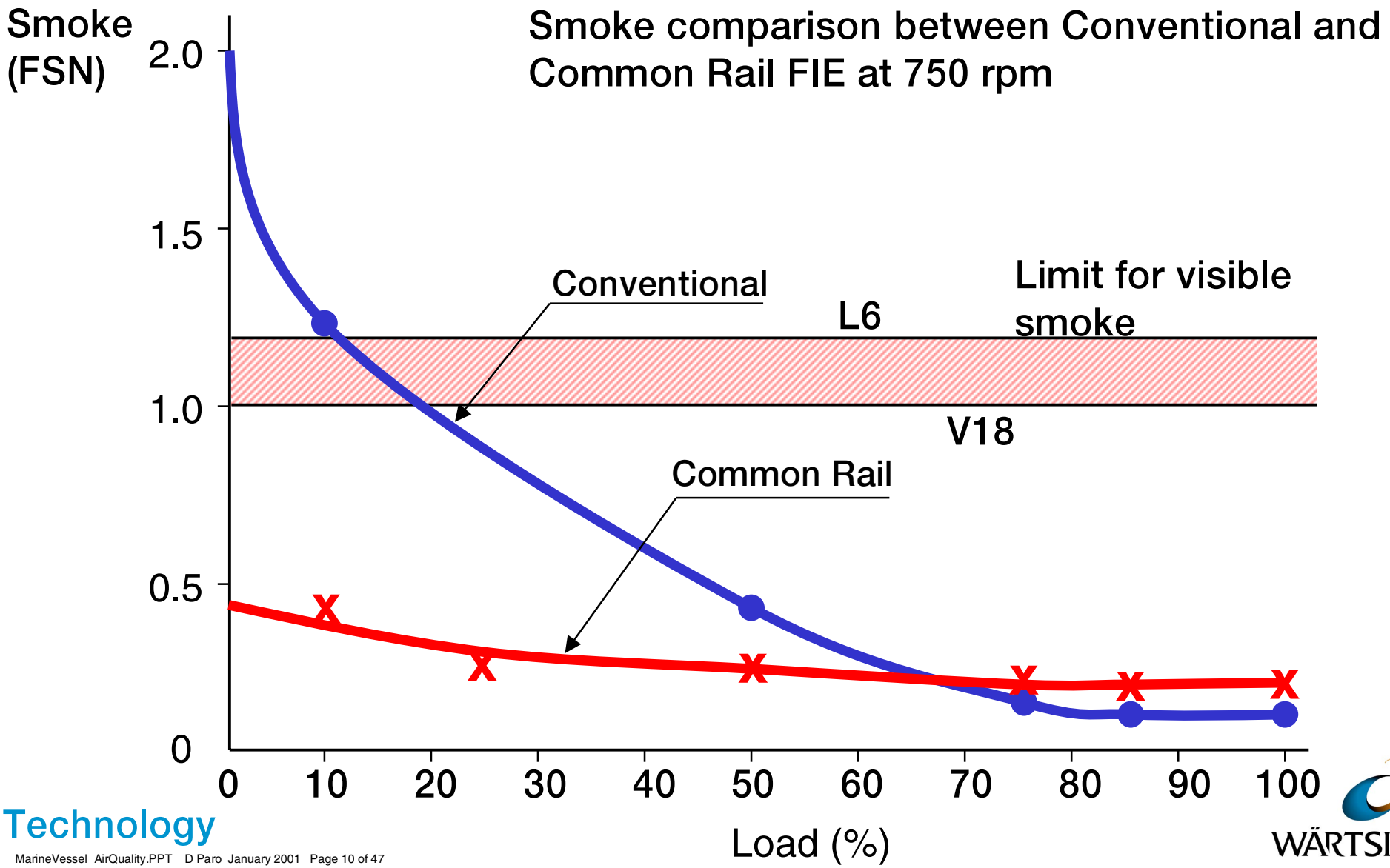

Technology

WÄRTSILÄ

Smoke values

10% 600 bar 2.53 FSN

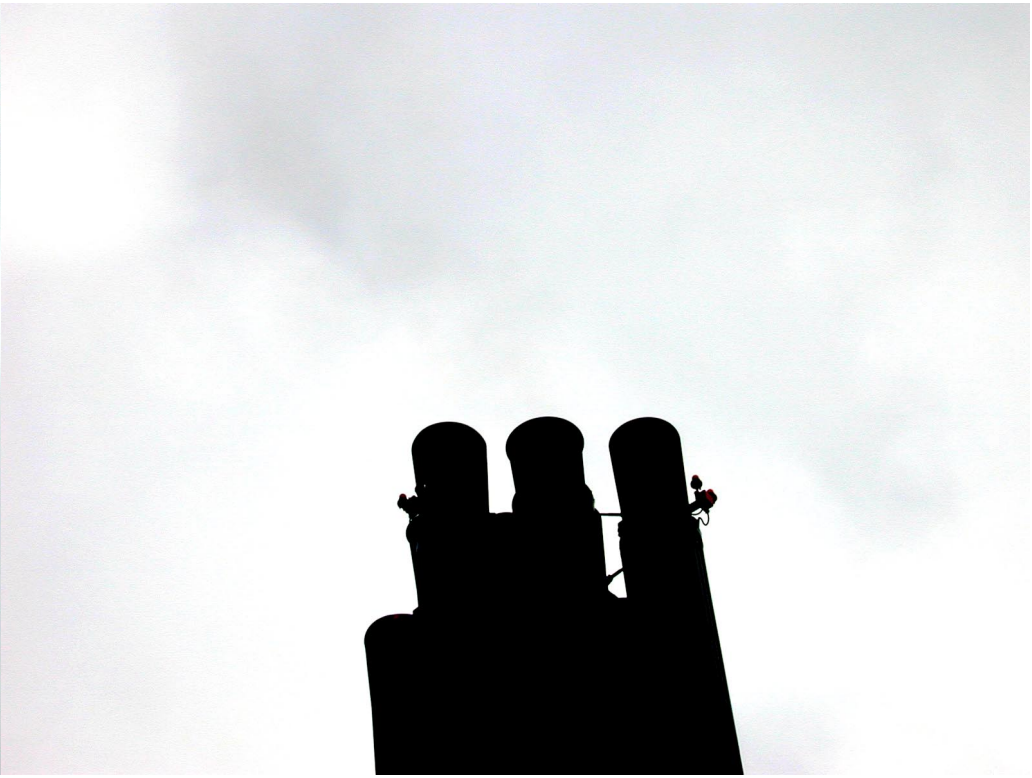

10% 1200 bar 0.49 FSN

WÄRTSILÄ

No Visible Smoke at Any Load by Common Rail Injection

WÄRTSILÄ

Wärtsilä Common Rail system

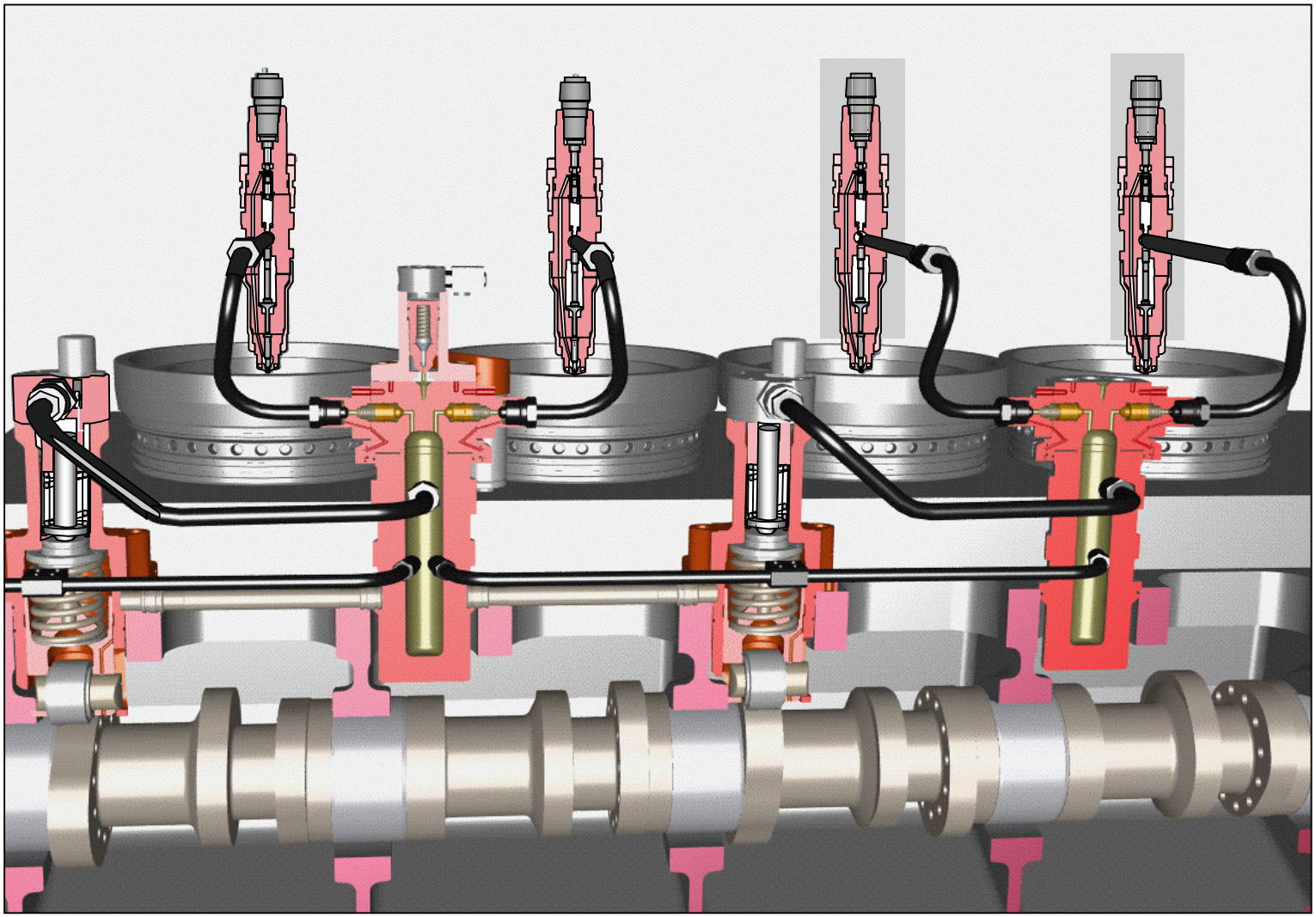

Technology

WÄRTSILÄ

Sulzer RT-flex engine

RTA engine

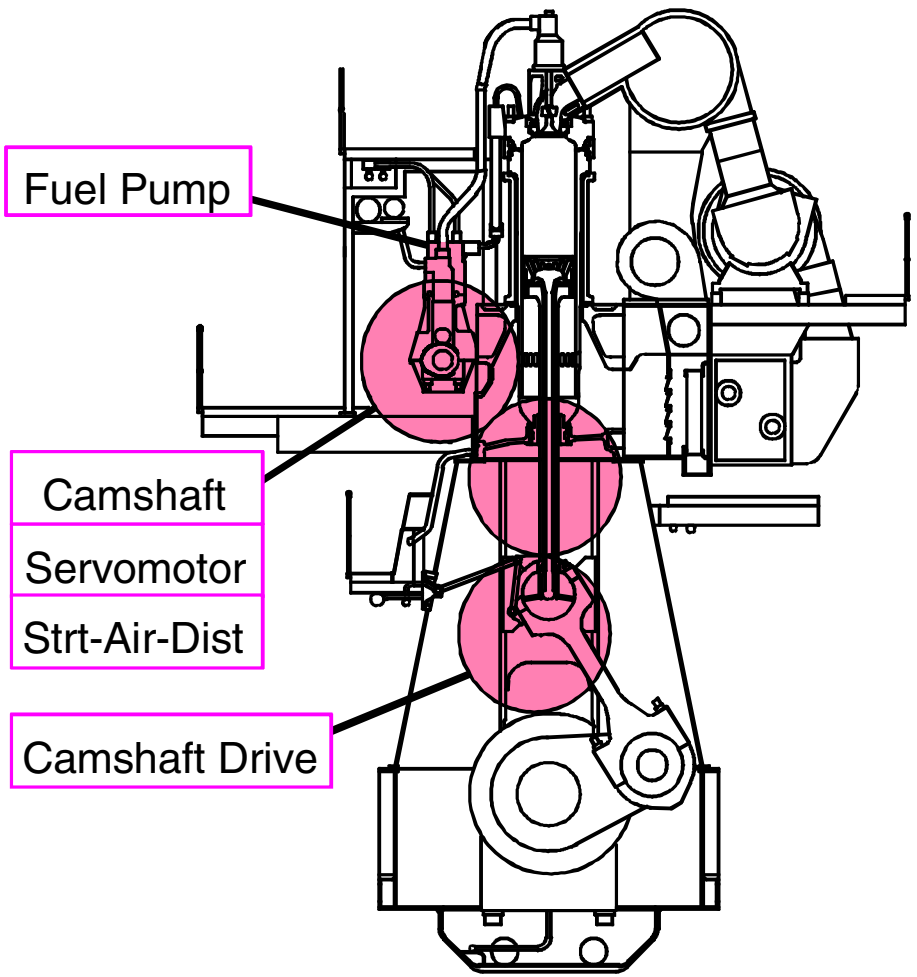

RT-flex engine

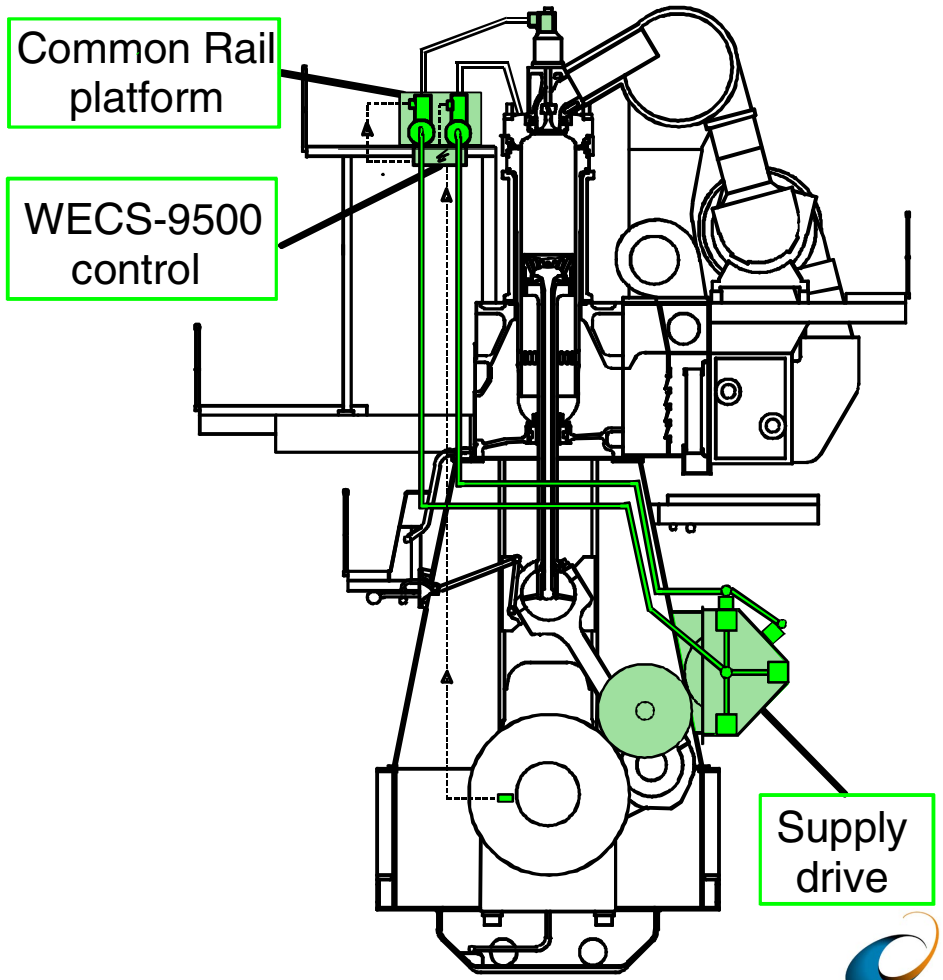

Technology

WÄRTSILÄ

RT-flex Low smoke mode

Smoke emissions with conventional fuel injection and Sulzer Common Rail

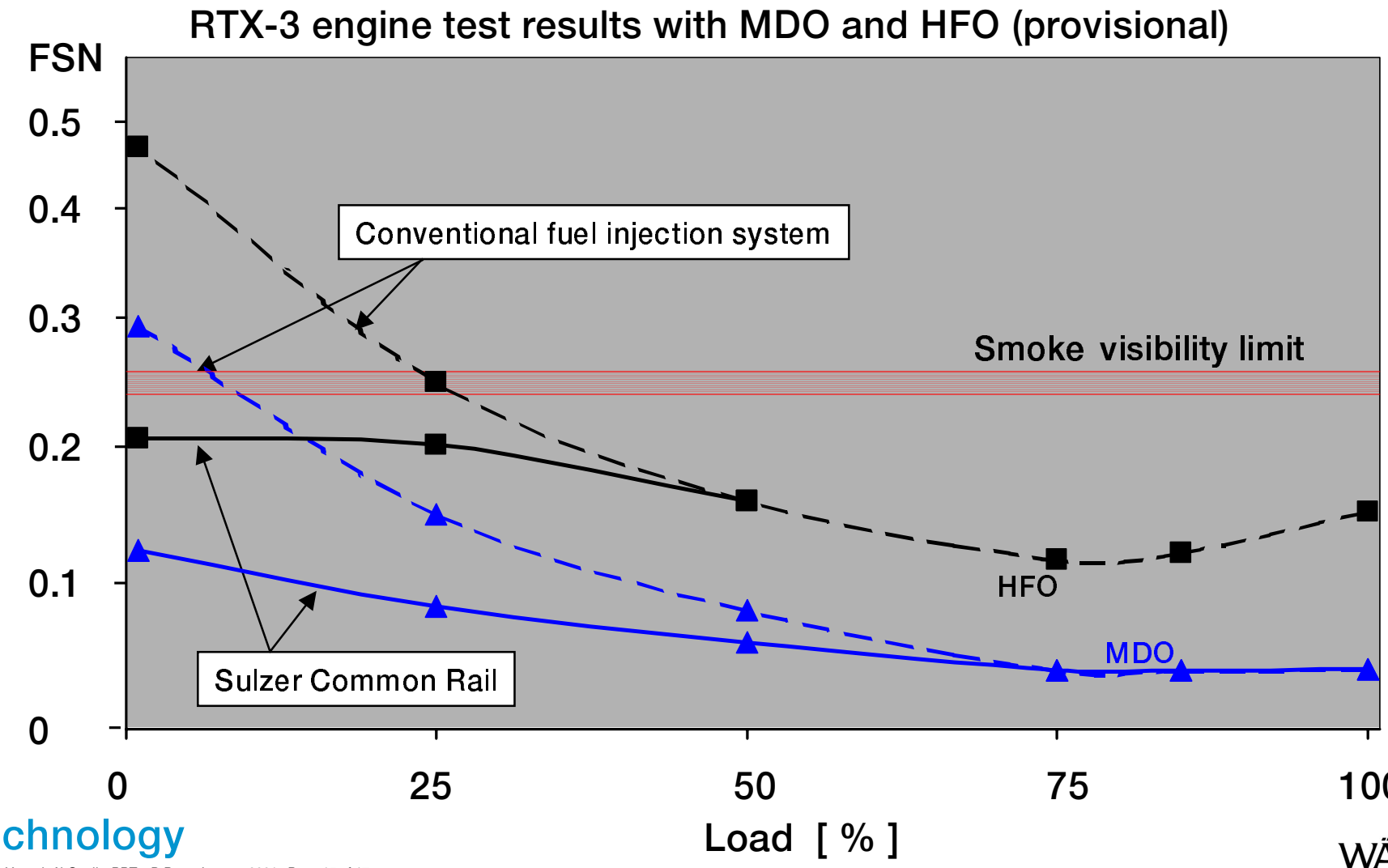

Technology

WÄRTSILÄ

NO_x control by Wärtsilä

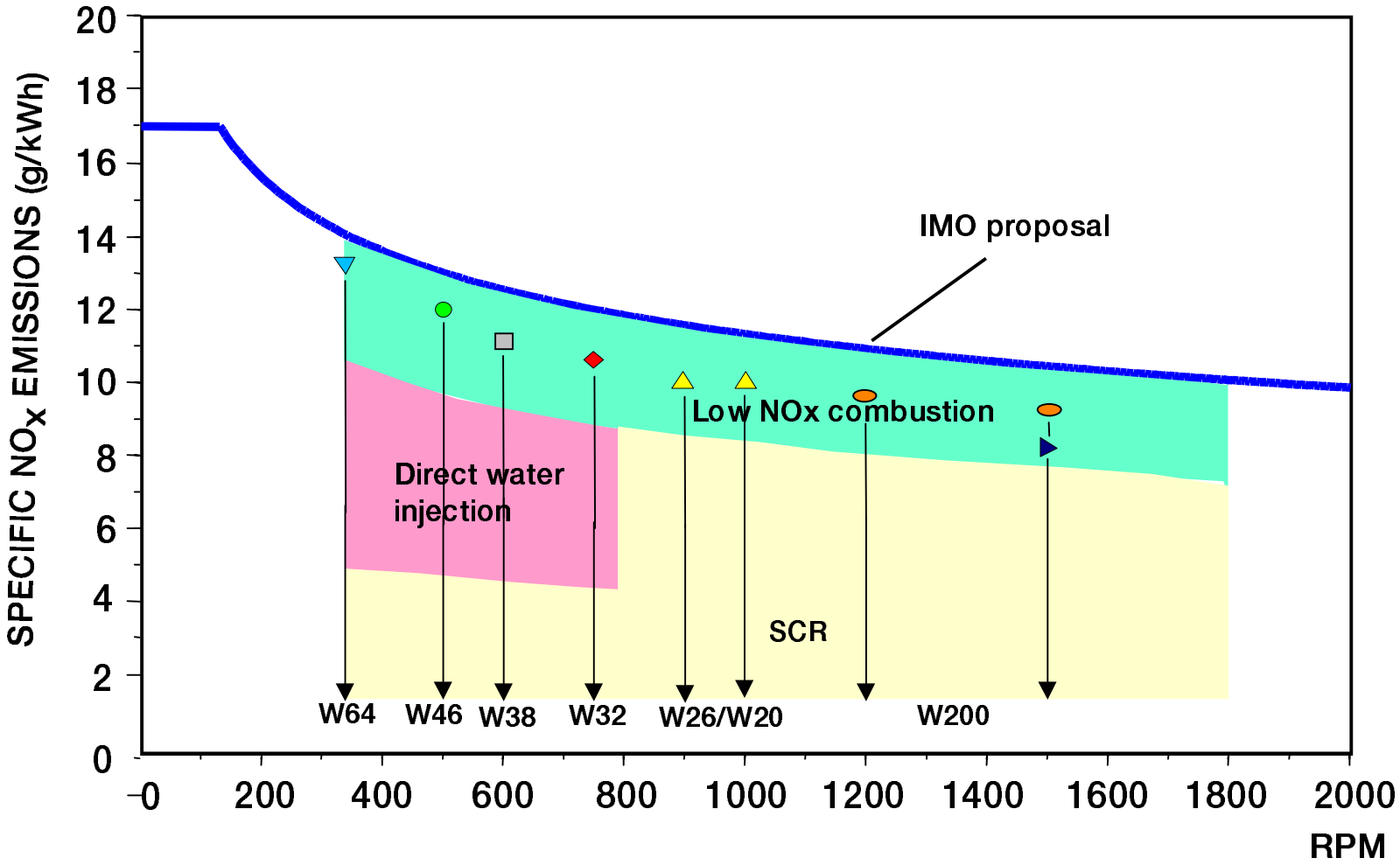

Technology

WÄRTSILÄ

Direct Water Injection

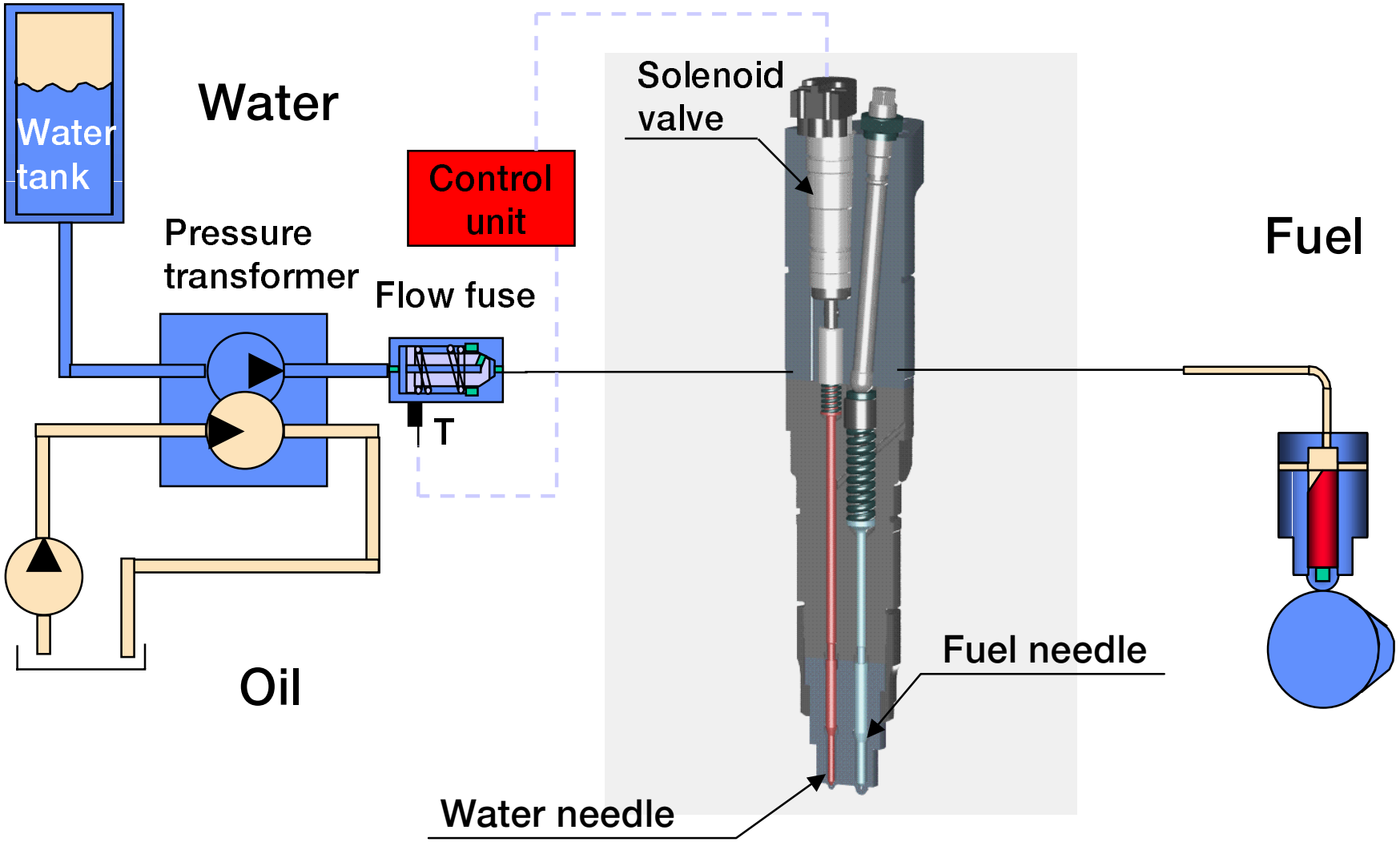

WÄRTSILÄ

Direct Water Injection Reference List January 2001

Installed/on order, Marine engines:

Ship	Owner		Engine	In service
RoRo	Godby Shipping AB		12V46C	Jan –99
RoRo	Godby Shipping AB		12V46C	Feb –99
RoRo	Ernst Russ GmbH & Co		12V46C	Mar –99
RoRo	Ernst Russ GmbH & Co		12V46C	Apr –99
RoRo	Bror Husell Chartering AB Ltd		16V46B	May –99
RoRo	Ernst Russ GmbH & Co		16V46B	Jun –99
RoRo	Ernst Russ GmbH & Co		16V46B	Dec –99
Silja Symphony	Silja Line		4 x 9L46A	Jun –99
Silja Serenade	Silja Line		4 x 9L46A	Jun –99
Finnmarken	OVDS, Norway	2 x W6L32 +	2 x W9L32	Nov –01
Newbuilding	TFDF, Norway		2 x W9L32	End -01
Newbuilding 1	Superfast Ferries		4 x 12V46	End -01
Newbuilding 2	Superfast Ferries		4 x 12V46	Spring –02
Newbuilding 1	P&O Princess Cruises		2 x 16V46	Sep -02
Newbuilding 2	P&O Princess Cruises		2 x 16V46	Sep -03
Newbuilding 3	P&O Princess Cruises	2 x W8L46 +	2 x W9L46	Jul -03
Newbuilding 4	P&O Princess Cruises	2 x W8L46 +	2 x W9L46	End -03

Installed/on order, Power Plant engines:

Installation	Country	Fuel	Engine	Delivery
Eneserve I	Japan	LFO	9L32LN	Feb 2000
Eneserve II	Japan	LFO	9L32LN	Feb 2000

Totally: 462 cylinders
440 MW

Technology

WÄRTSILÄ

Wärtsilä 46 with Common Rail and Direct Water Injection

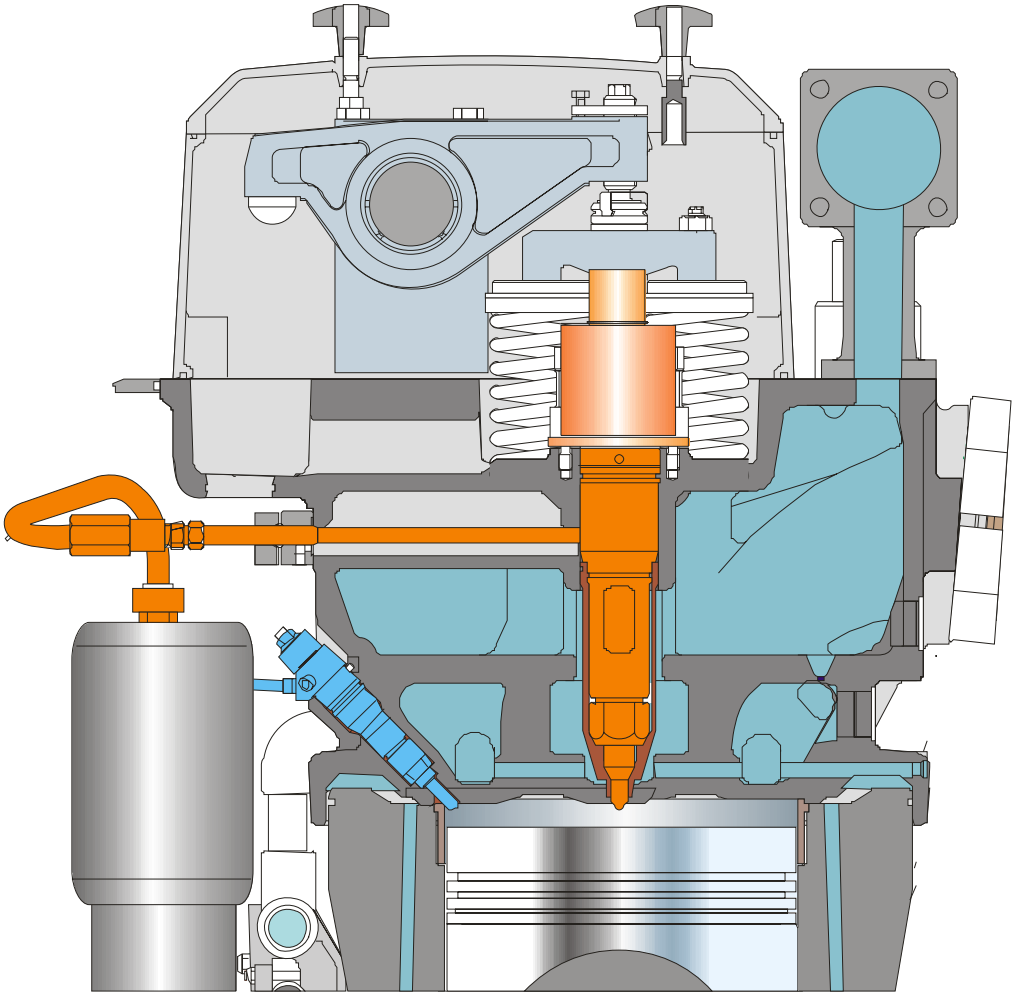

Technology

WÄRTSILÄ

NO_x emissions of diesel engines

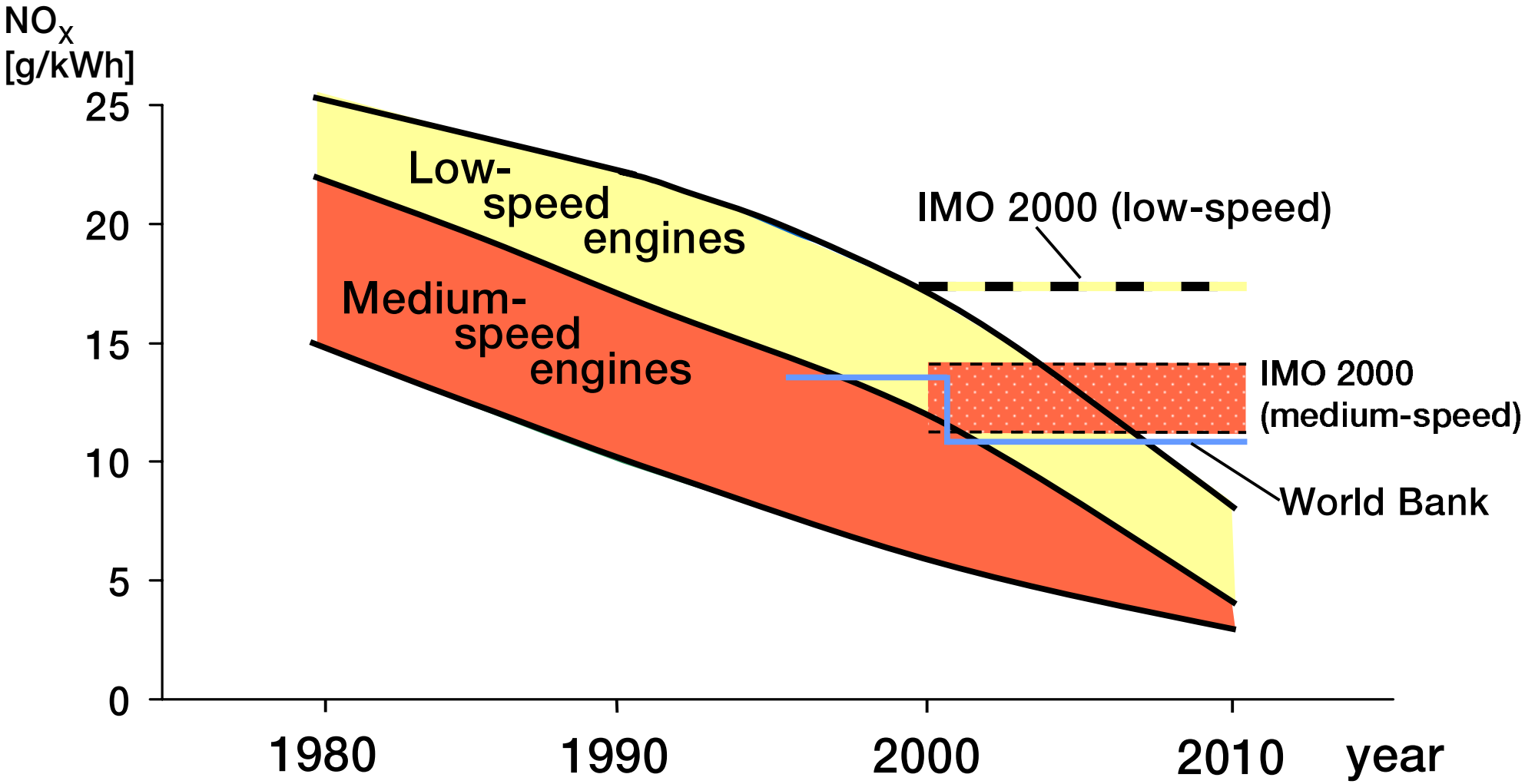

Technology

WÄRTSILÄ

Wärtsilä Combustion Air Saturation System CASS

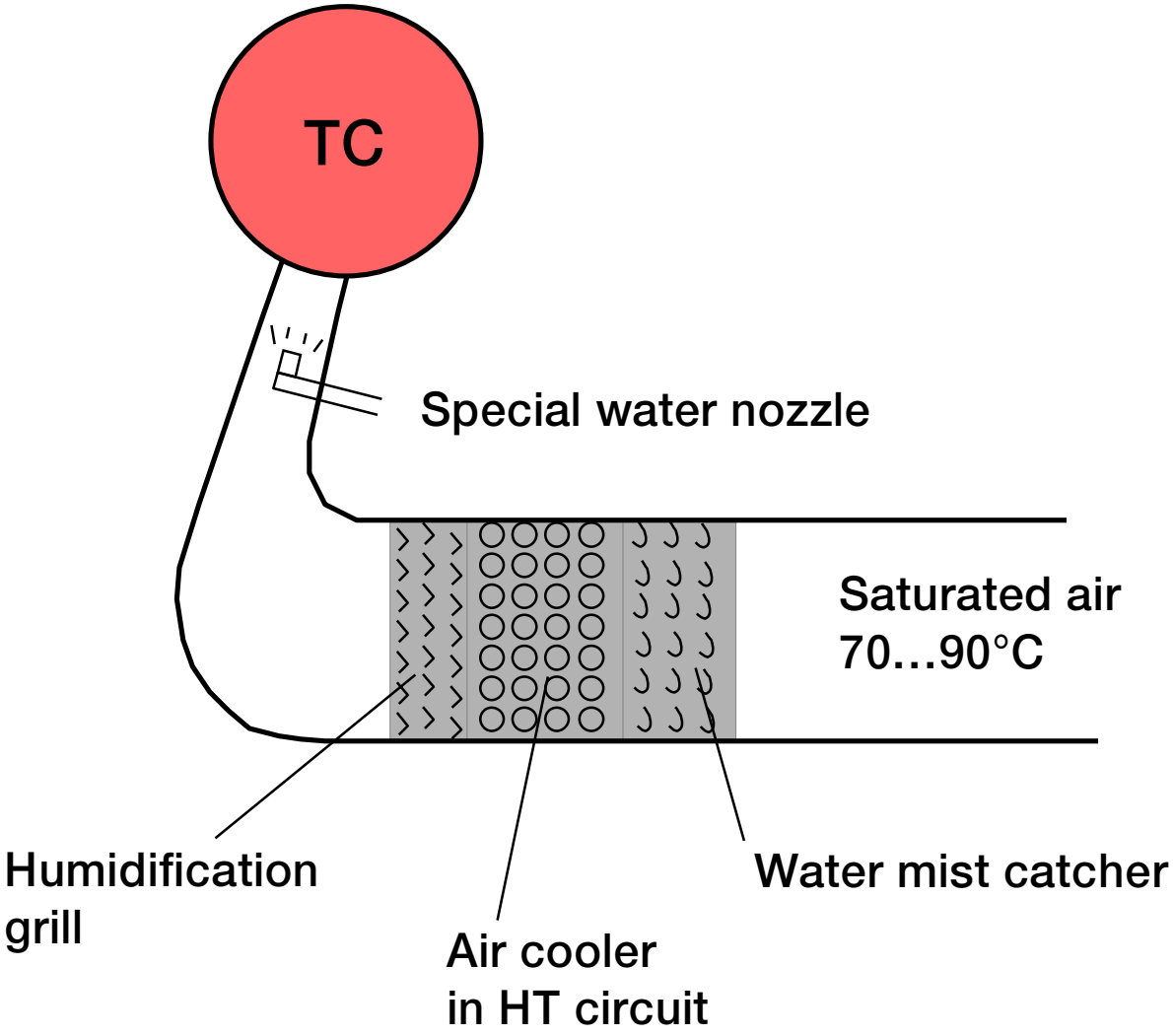

Technology

WÄRTSILÄ

Steam Injected Diesel (STID)

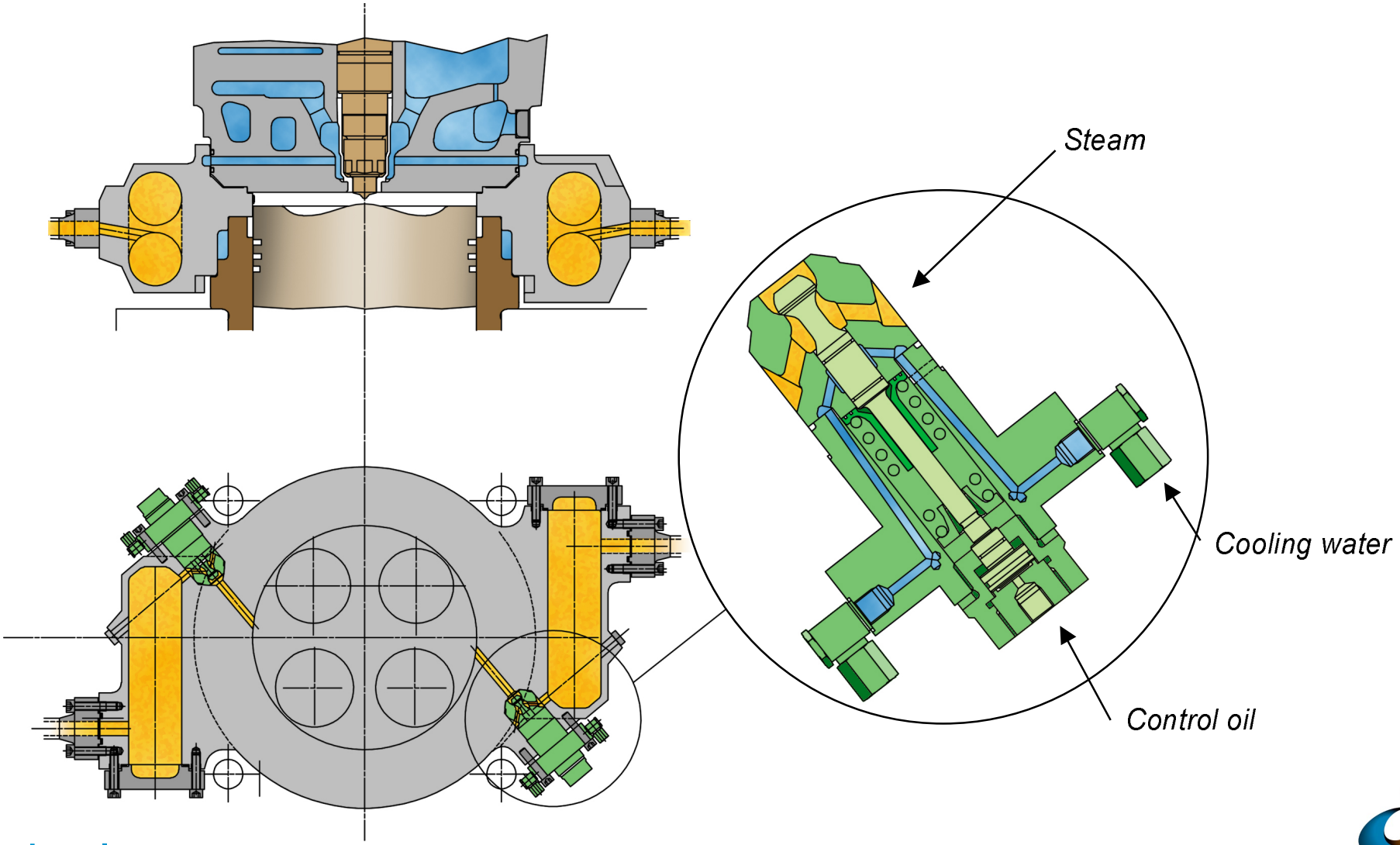

Technology

WÄRTSILÄ

WaCoReG Water Cooled Rest Gas

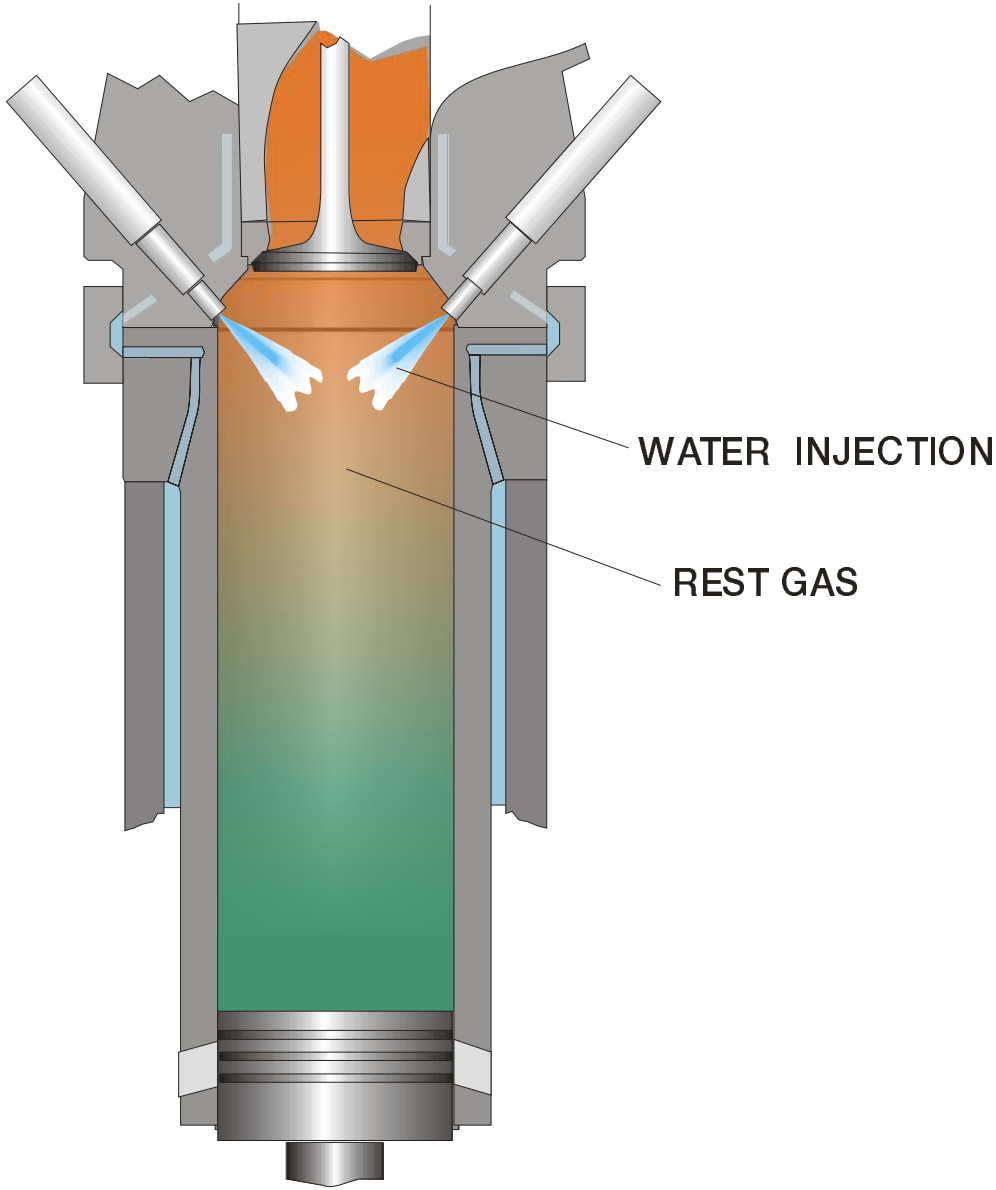

Technology

WÄRTSILÄ

NO_x emissions of large engines

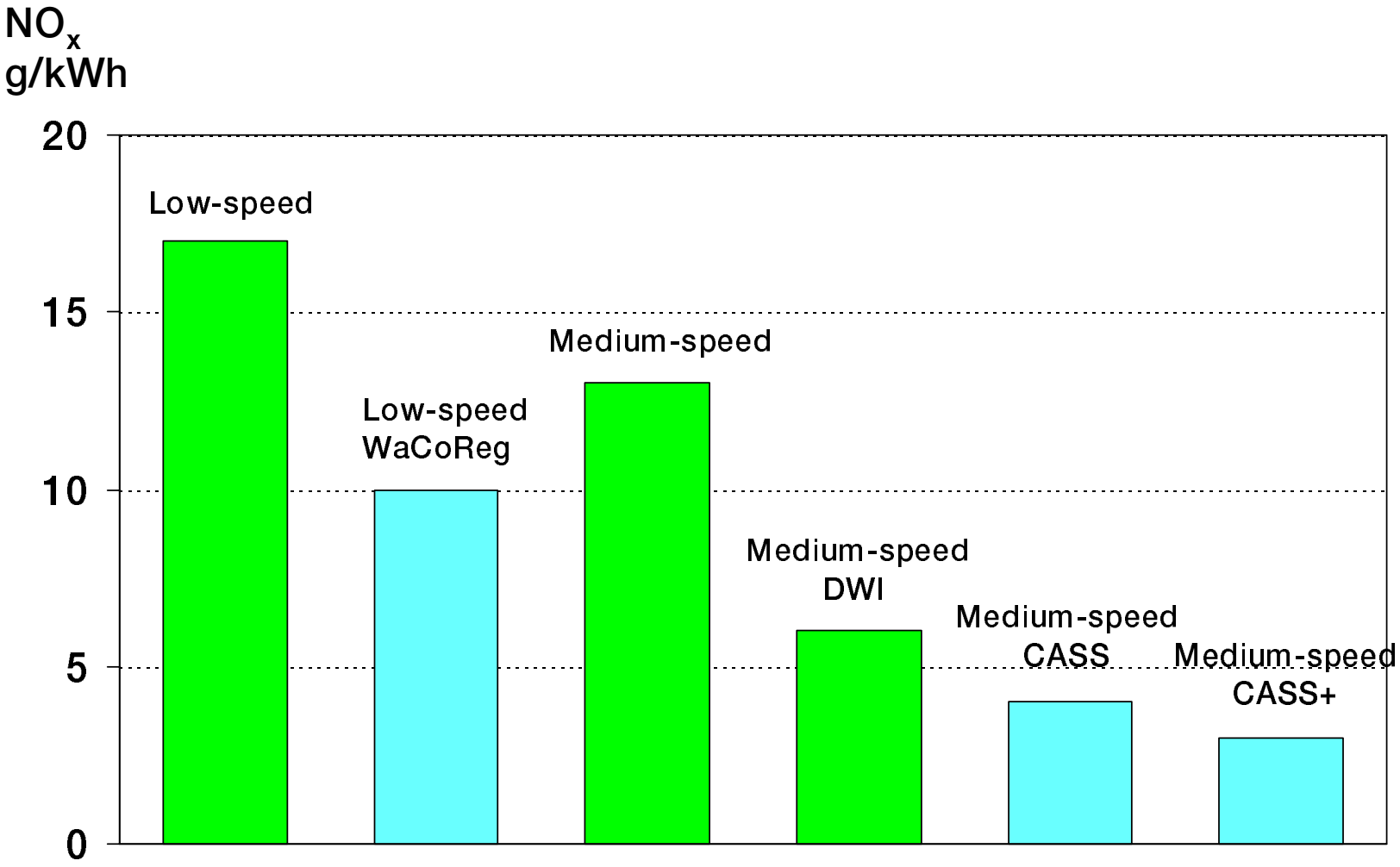

Technology

WÄRTSILÄ

NO_x Abatement Technology - SCR

Selective Catalytic Reduction System

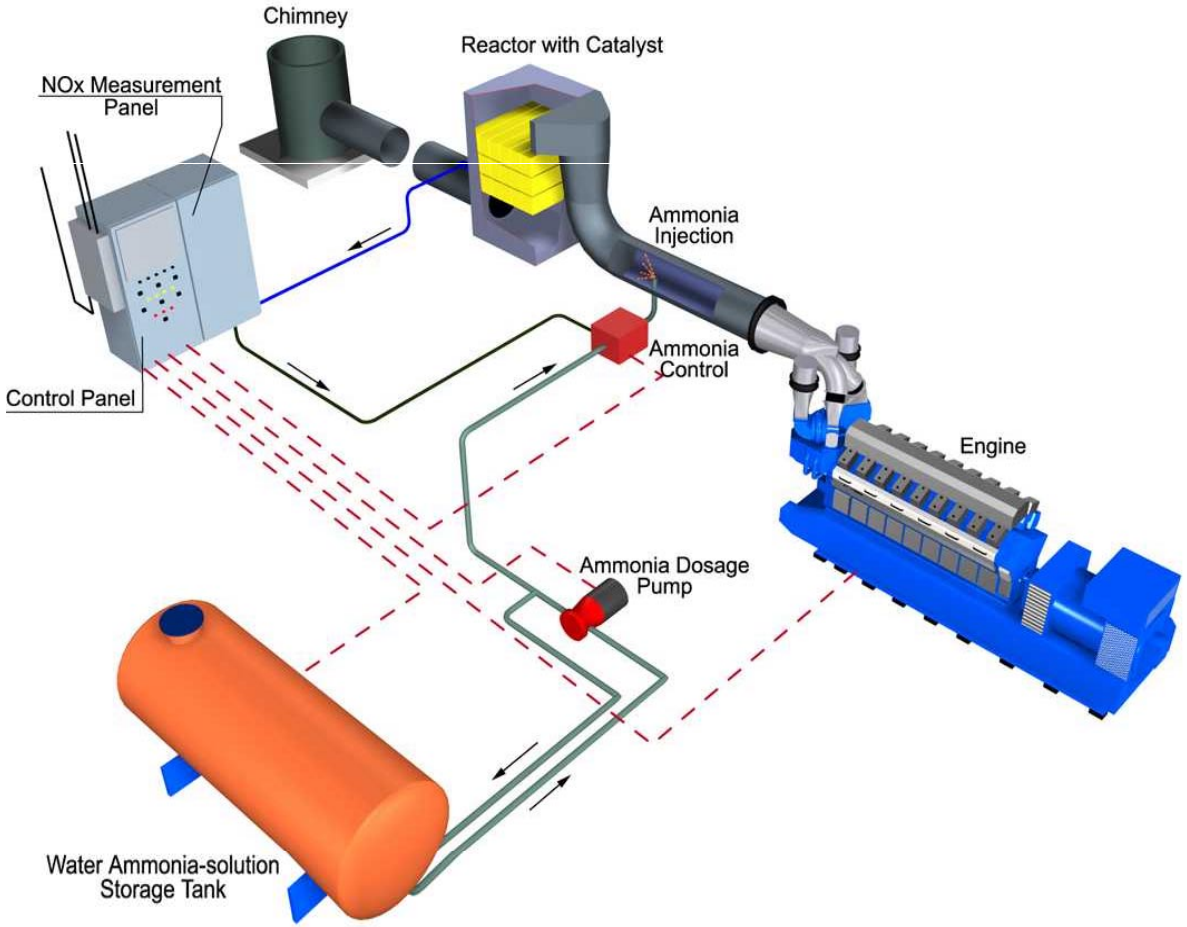

Technology

WÄRTSILÄ

Compact SCR

- Combined Silencer and SCR Unit Tailored for Wärtsilä Engines
- Modular Design Enabling SCR Retrofit
- Minimized Size
- NO_x Reduction: 85 - 95%
- Sound Attenuation: 25 - 35 dB(A)

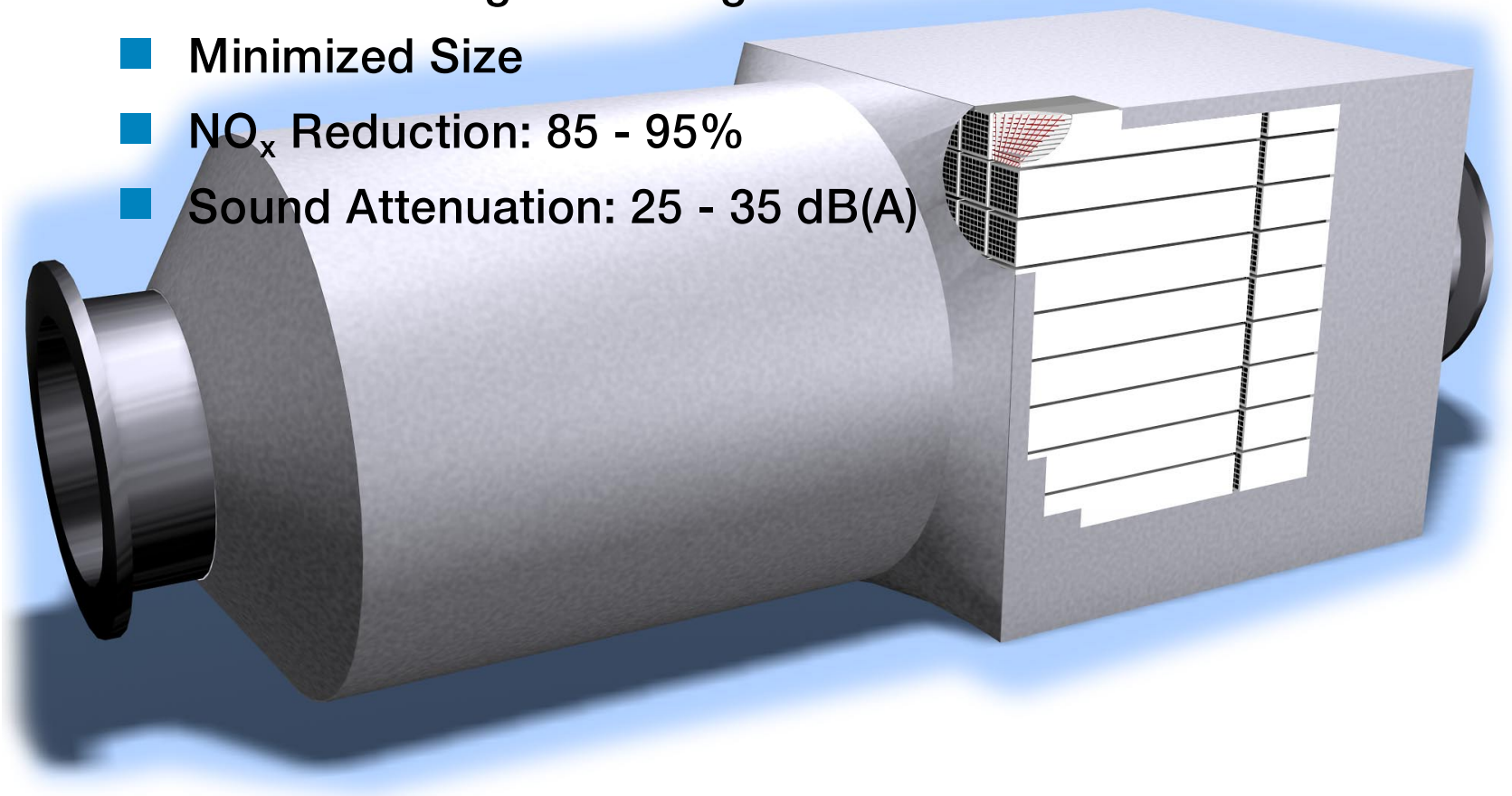

WÄRTSILÄ

SCR - Investment and O&M Costs

SCR Costs as a Function of NO_X Reduction Rate

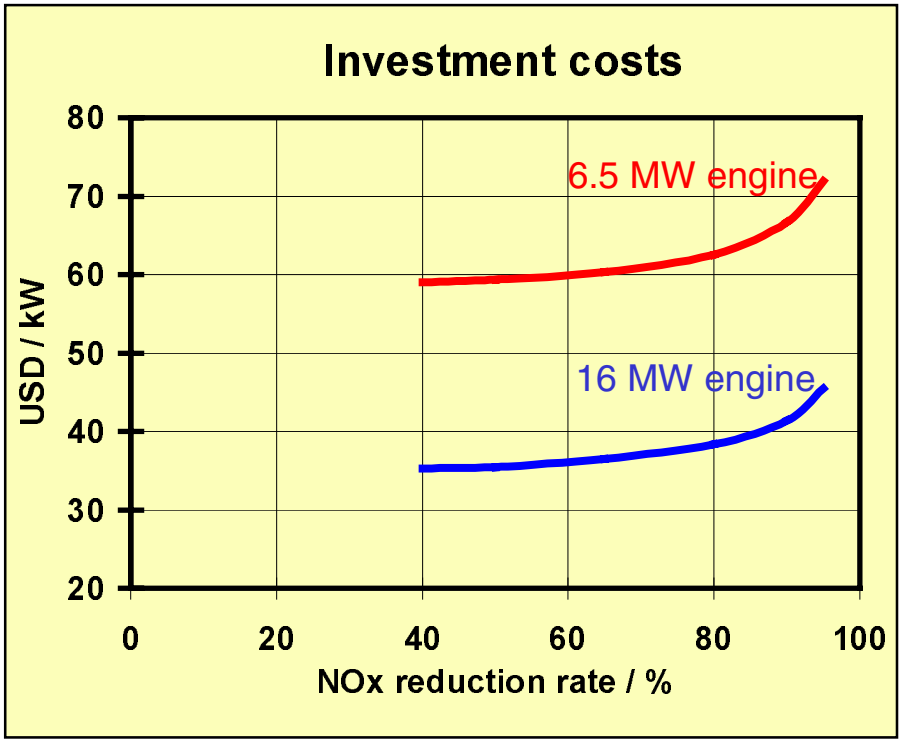

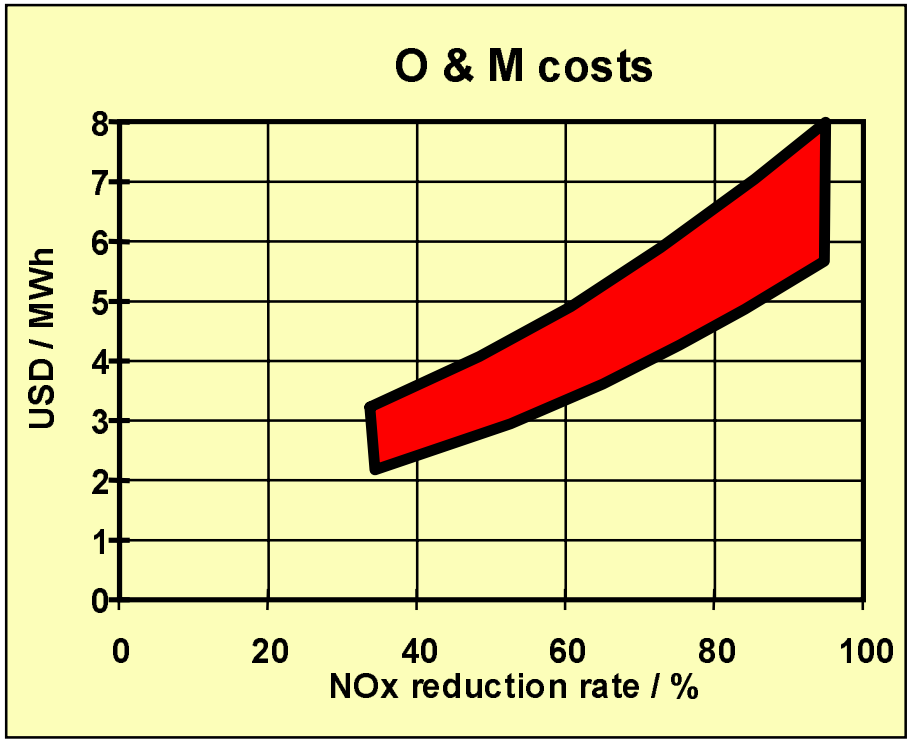

Assumption: Aqueous (25 wt-%) ammonia solution used as reagent

Greenhouse effect and global warming

PREDICTED TEMPERATURE RISE

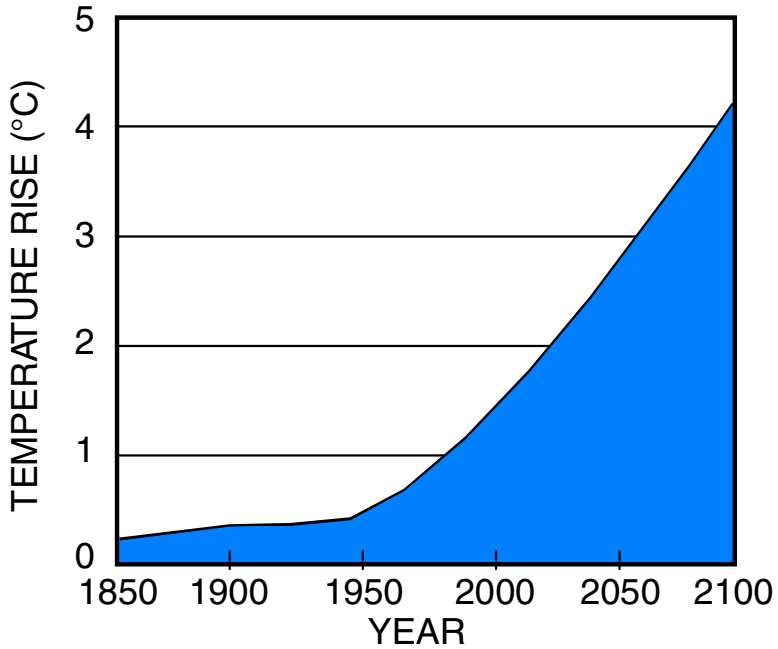

PREDICTED SEA LEVEL RISE

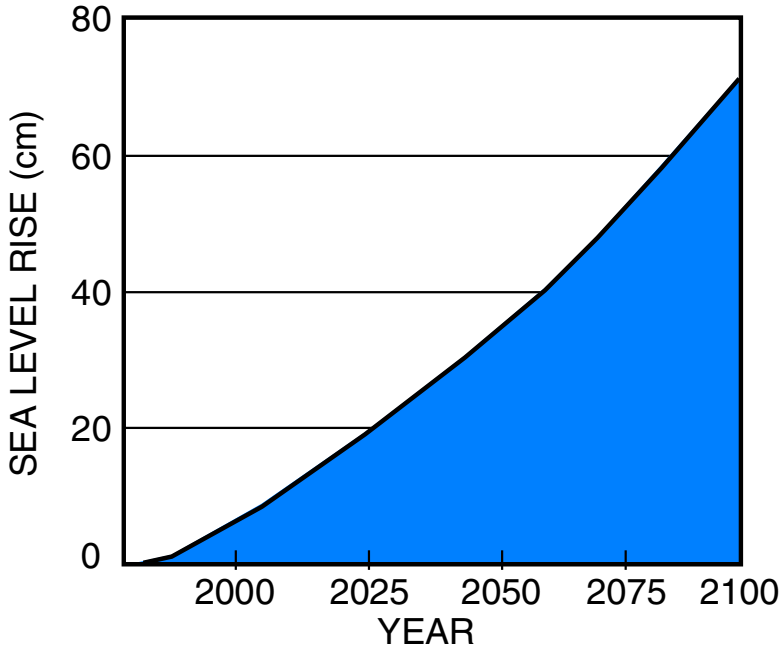

SOURCE: LLOYD'S LIST

WÄRTSILÄ

The water ball

Technology

WÄRTSILÄ

Efficiency development of Wärtsilä engines

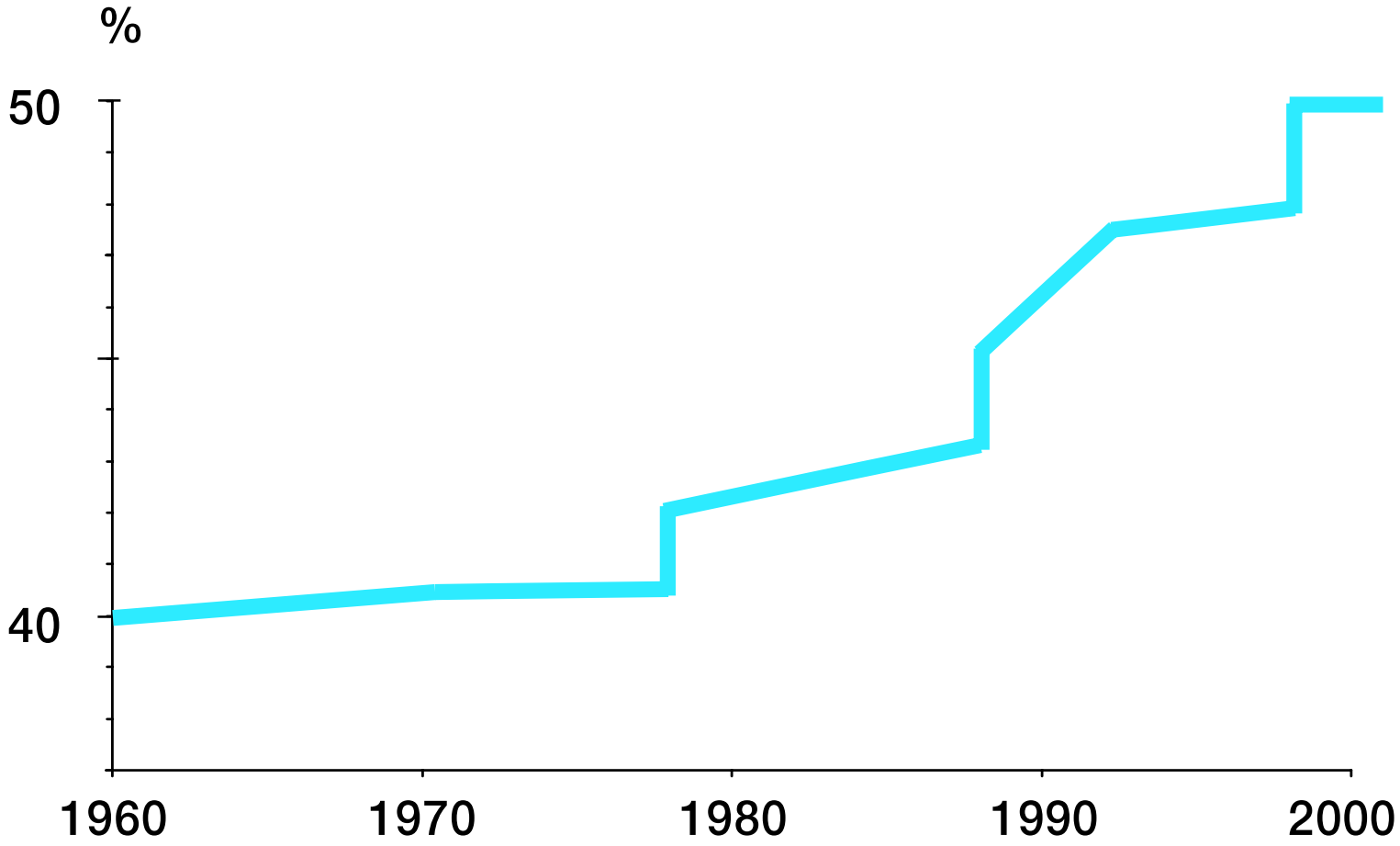

Technology

WÄRTSILÄ

Diesel combined cycle power plant

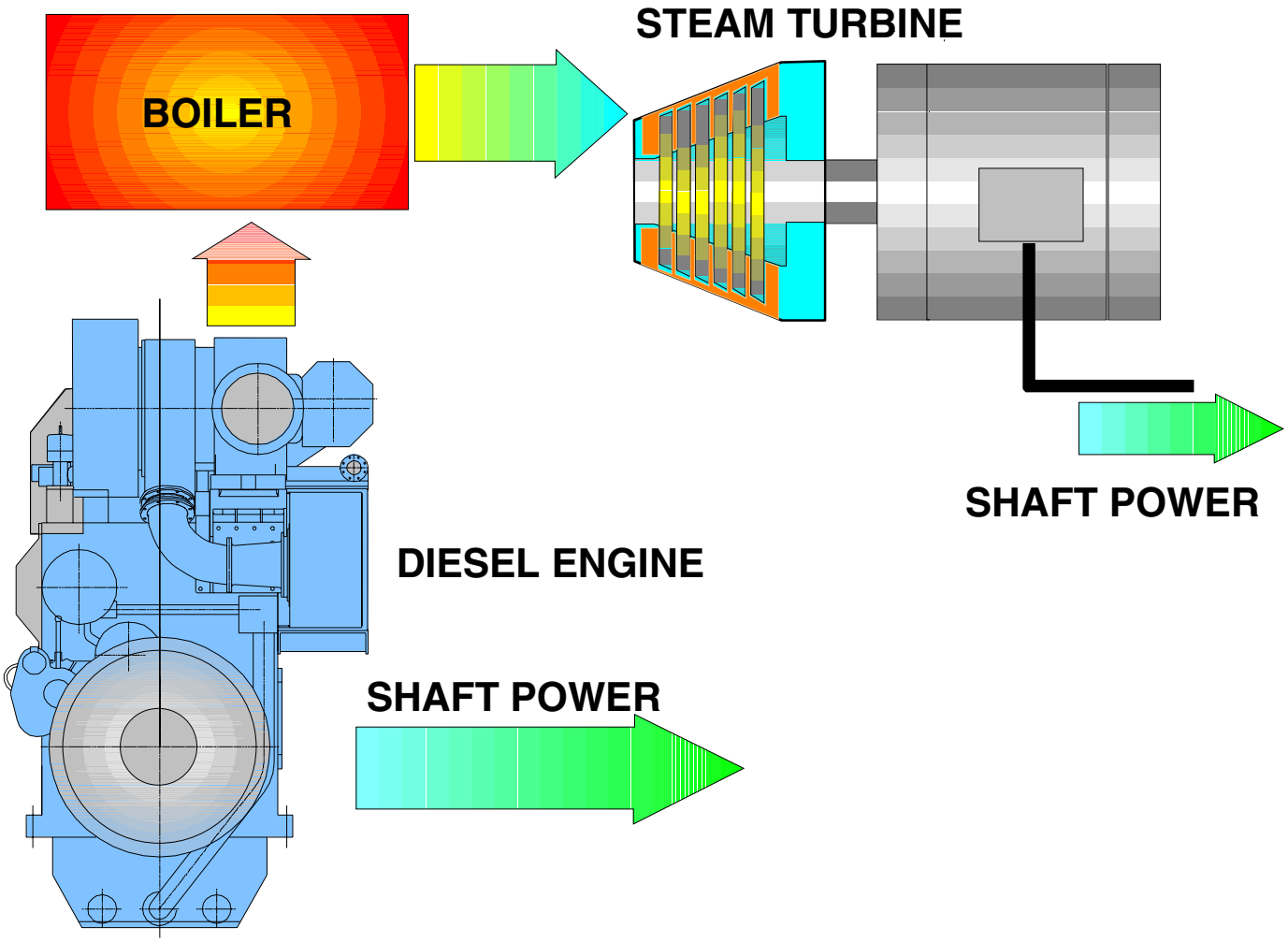

Technology

WÄRTSILÄ

Wärtsilä 46HC heat balance

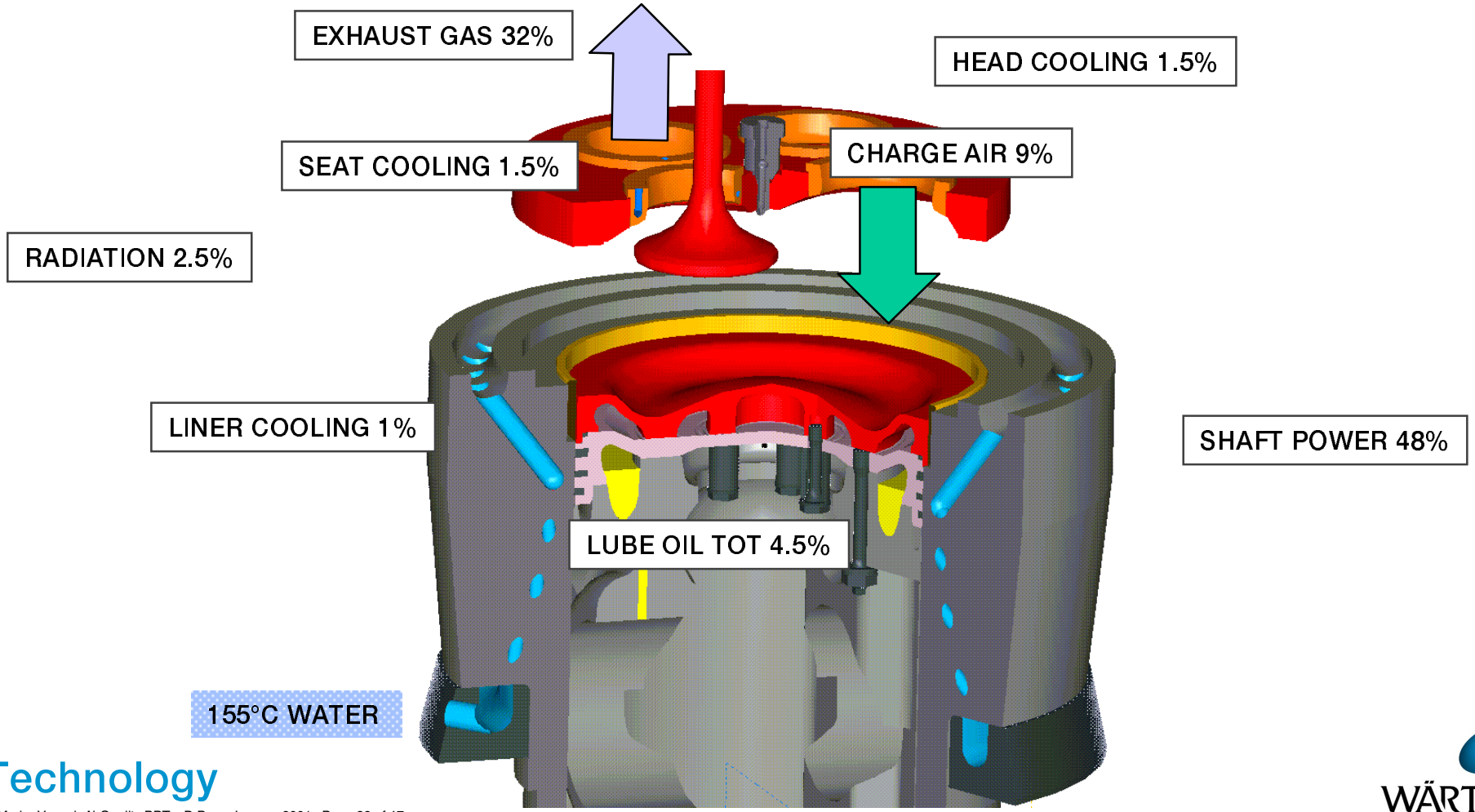

WÄRTSILÄ

Wasa Pilot Power Plant

Technology

WÄRTSILÄ

Efficiency of large engines

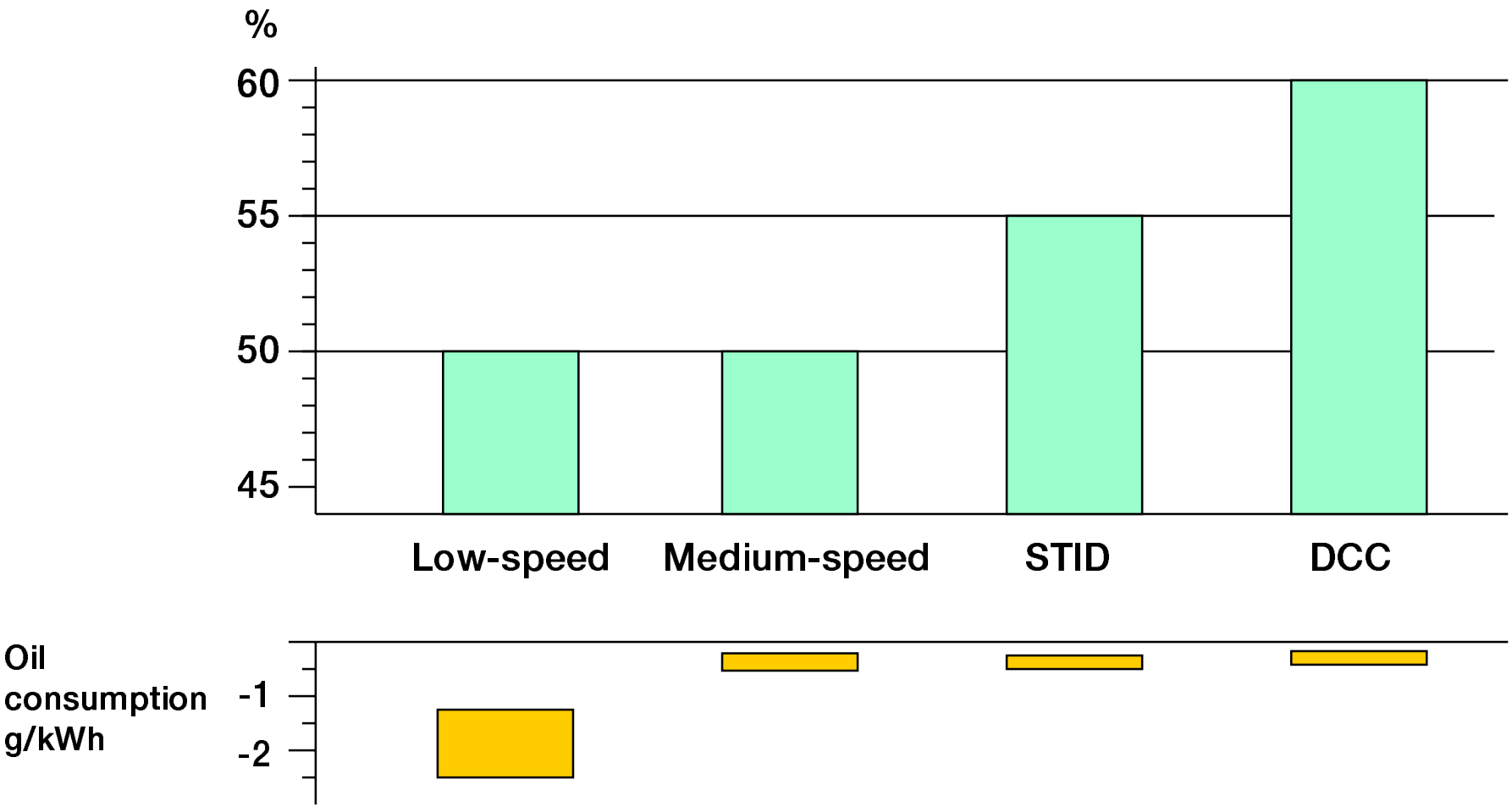

Technology

WÄRTSILÄ

CO_2 emissions of a 400 mm class four-stroke engine

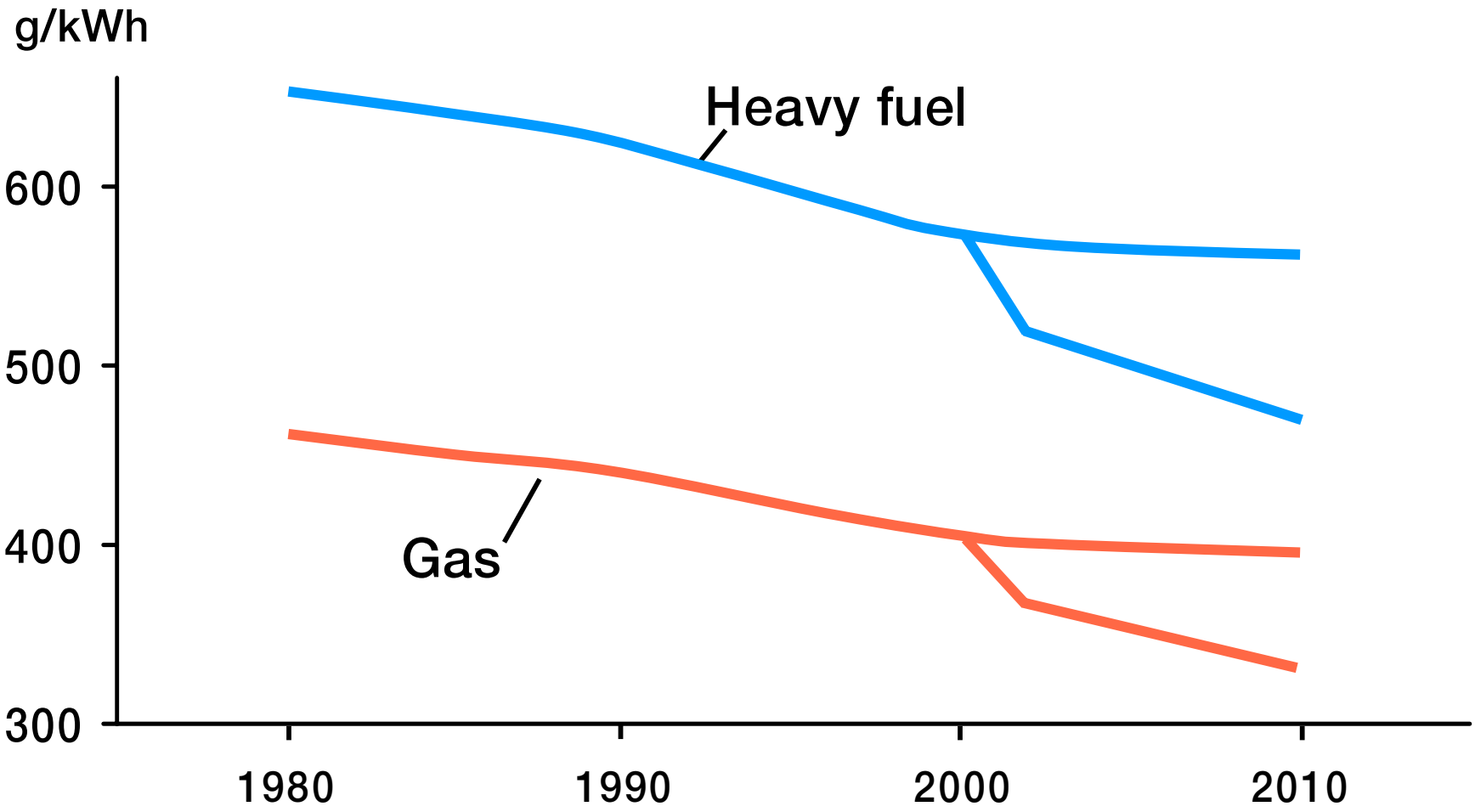

Technology

WÄRTSILÄ

Electronic control of gas injection

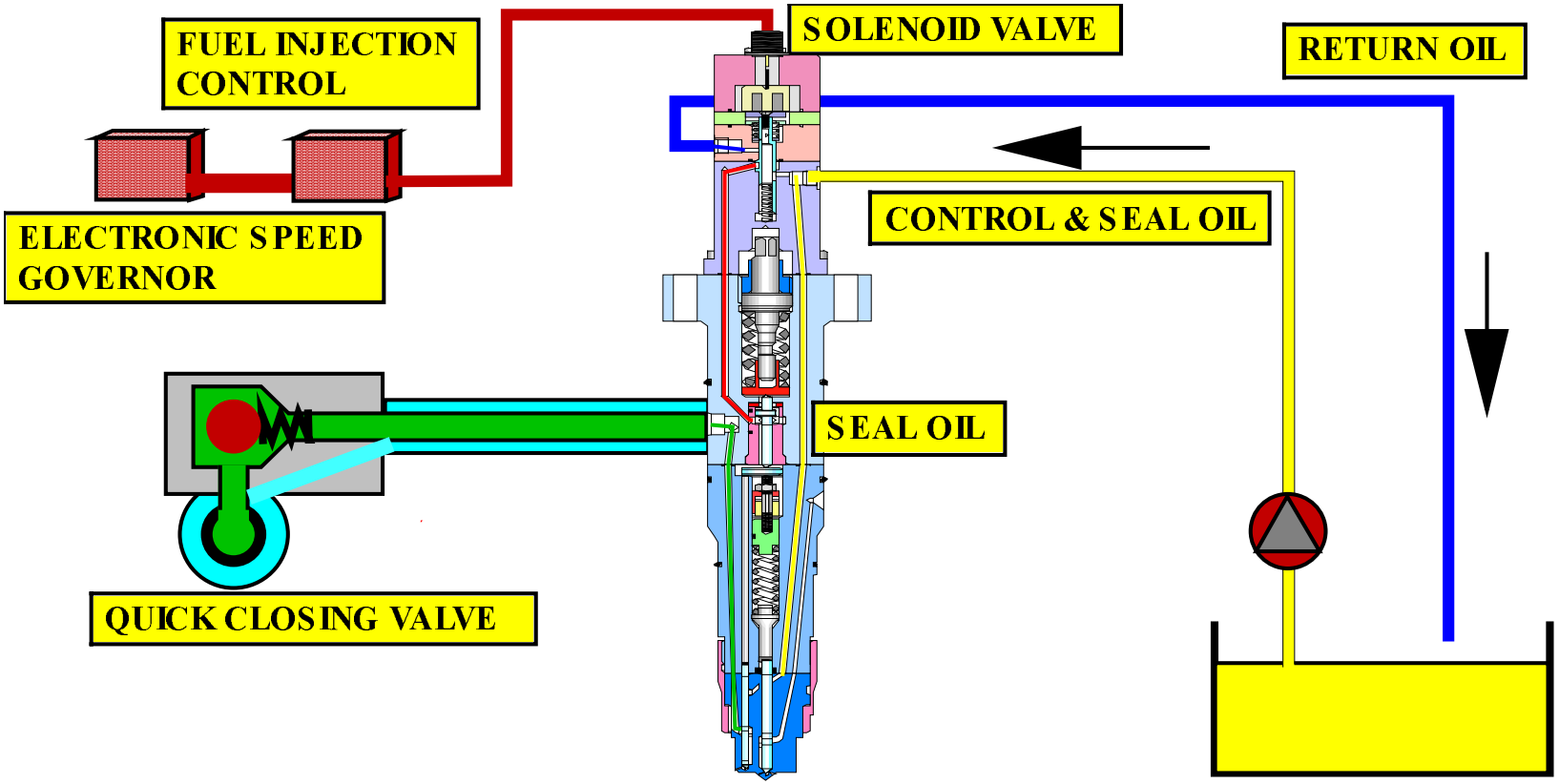

WÄRTSILÄ

Wärtsilä 32DF Cylinder head

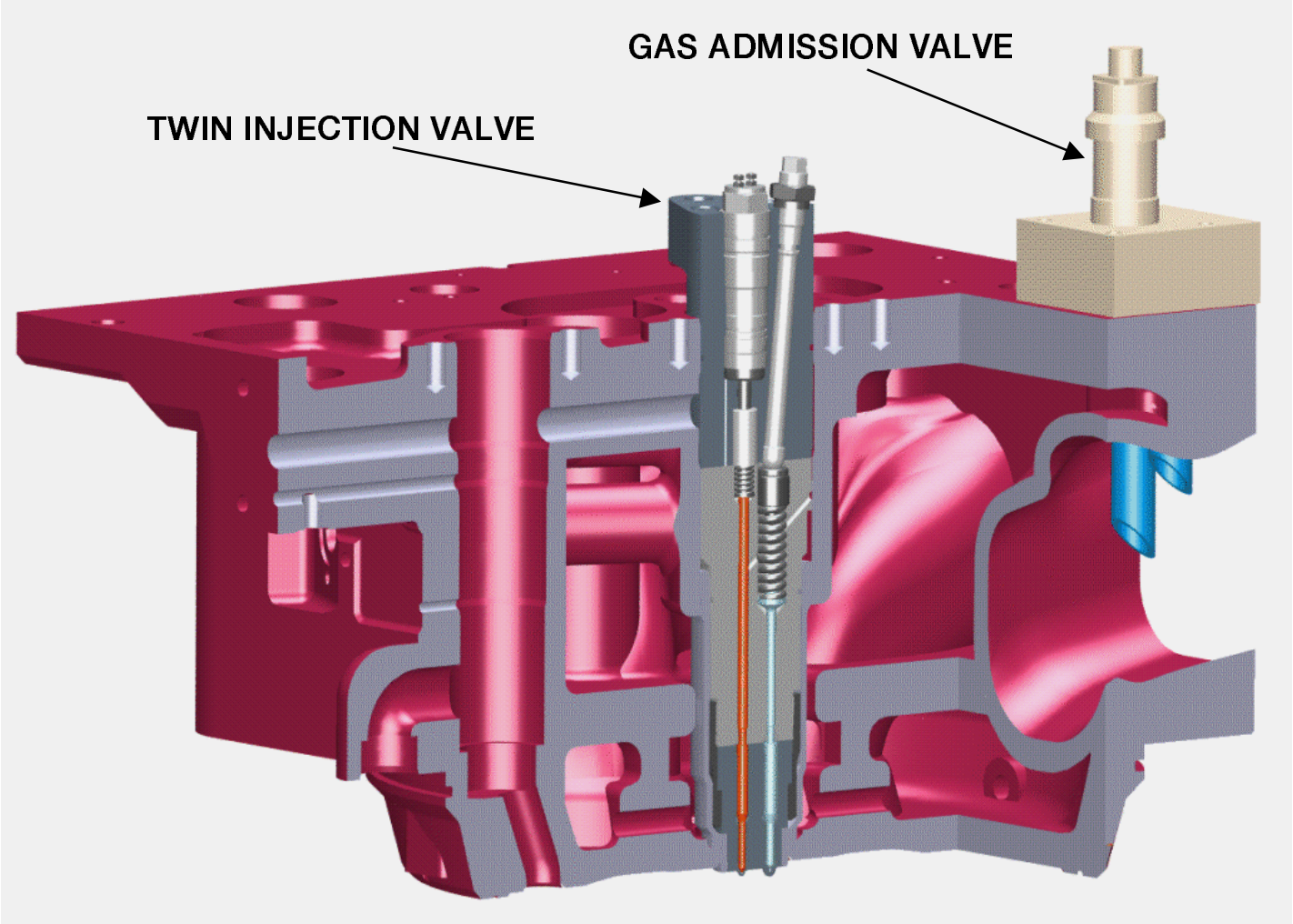

Technology

WÄRTSILÄ

Wärtsilä 6L50DF

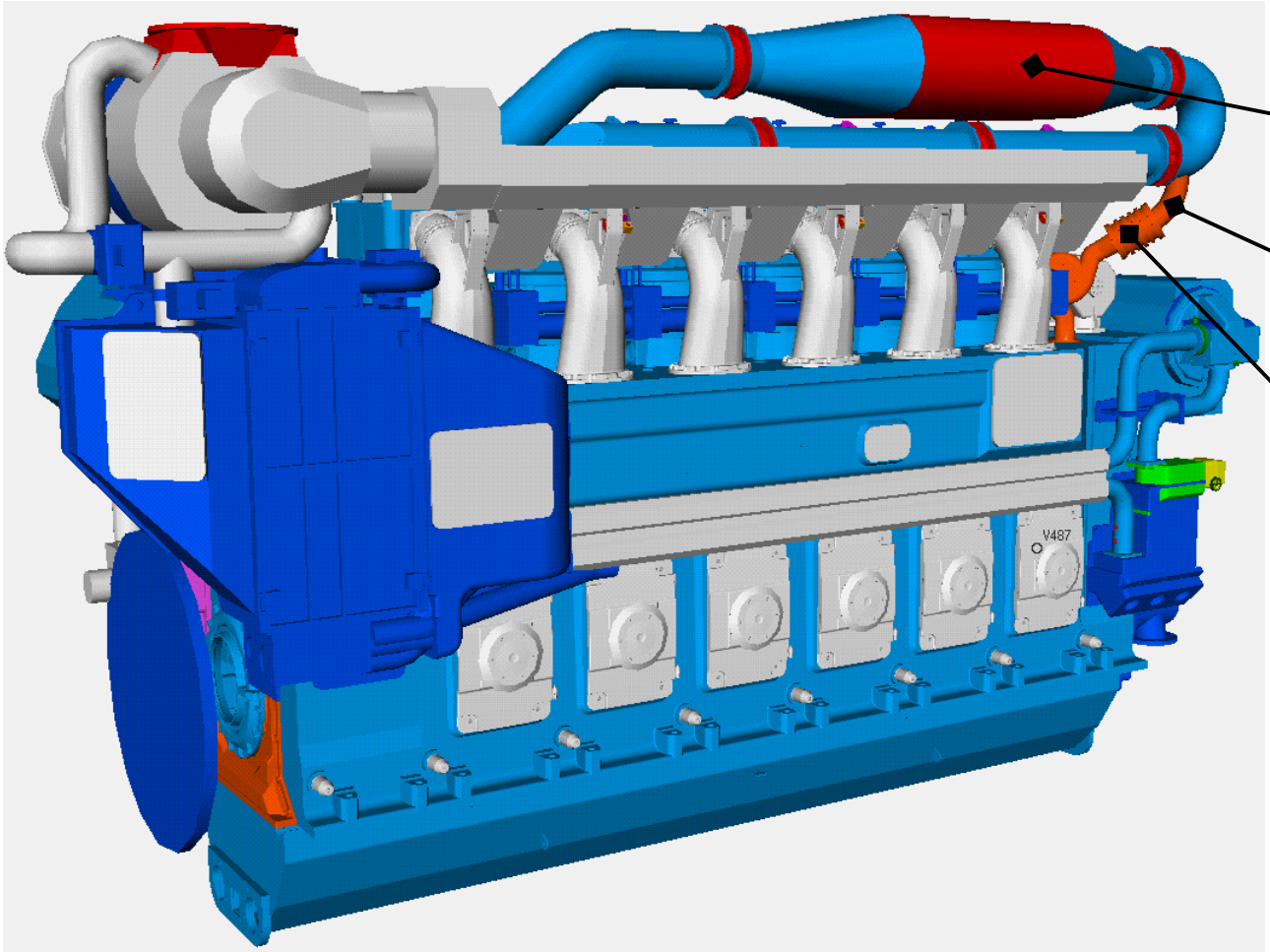

Oxidation catalyst

Crank case venting

High speed pump

Technology

WÄRTSILÄ

Gas fuelled ship

Technology

WÄRTSILÄ

Possible marine fuel scenario

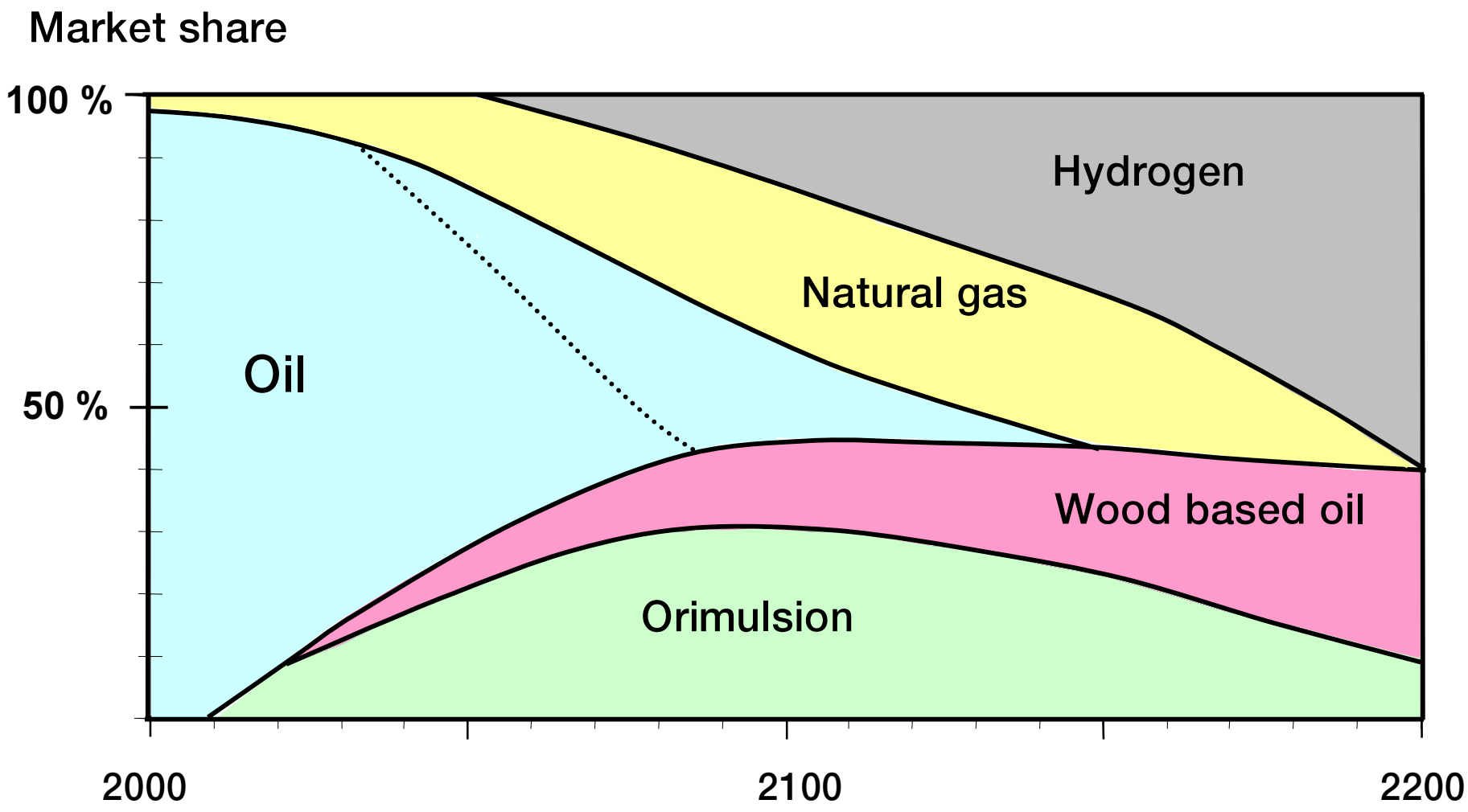

Technology

WÄRTSILÄ

Crude and bitumen reserves in Venezuela

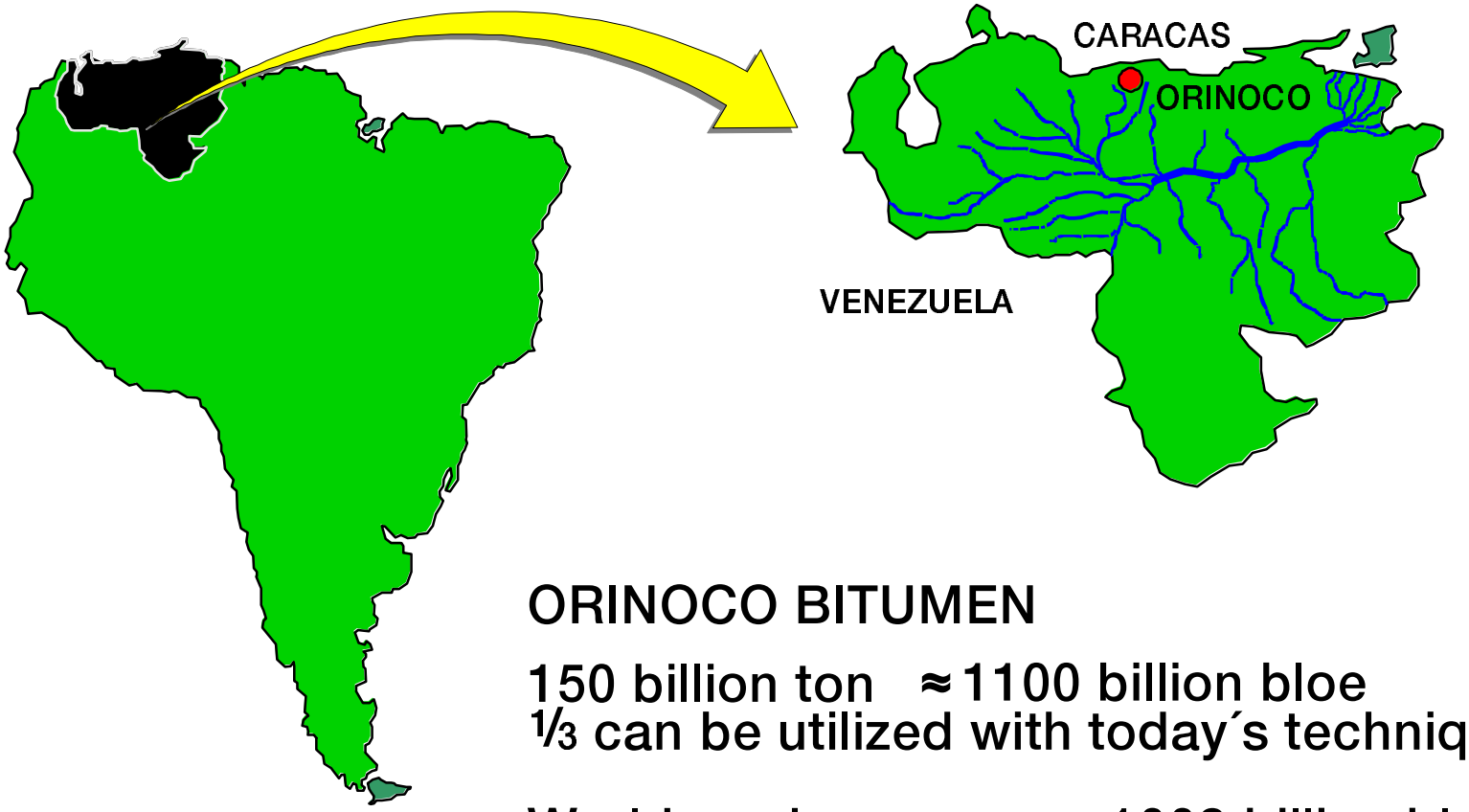

ORINOCO BITUMEN

150 billion ton ≈ 1100 billion bloe
⅓ can be utilized with today´s technique

World crude resources 1009 billion bloe

Technology

WÄRTSILÄ

Bitumen - water emulsions

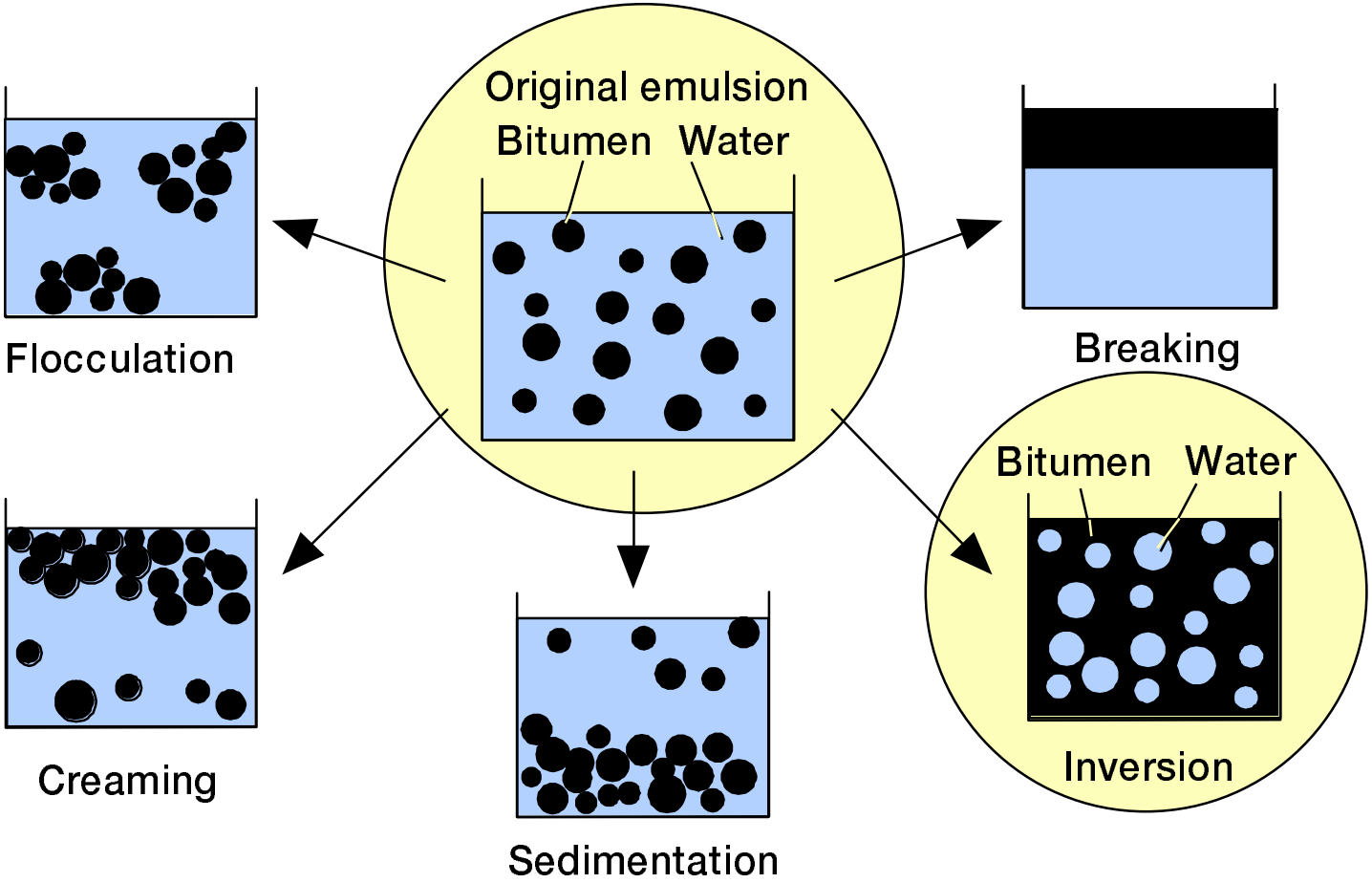

WÄRTSILÄ

Orimulsion - HFO

Property	Unit	Orimulsion 400 (Typical)	HFO (Typical max.)
Density	kg/m^3 at 15°C	1010	990
Viscosity	cSt/50°C	350	730
Water	%-vol	29	1.0
Sulphur (S)	%-m	2.7	4.0
Ash	mg/kg	0.14	0.08
Vanadium (V)	mg/kg	300	300
Sodium (Na)	mg/kg	30	50
Al + Si	mg/kg		30
Magnesium (Mg)	mg/kg	6	
CCAI			870
Lower heat value	MJ/kg	27.6	39.8

Source: Orimulsion values by BITOR
HFO values from WNSFI-S database with about 500 HFO analysis from power plants with WV32 and W46 engines. About 80 % of the analysis are below "Typical max."

Energy resources

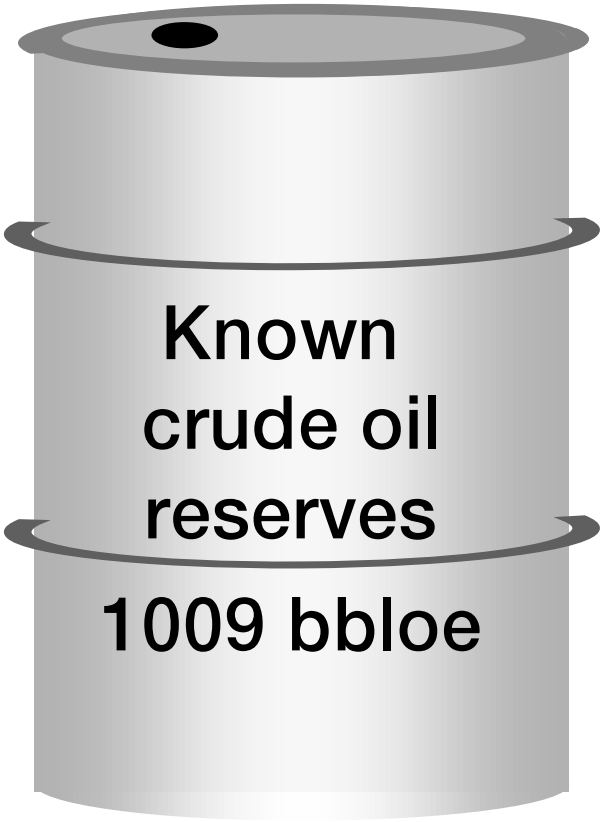

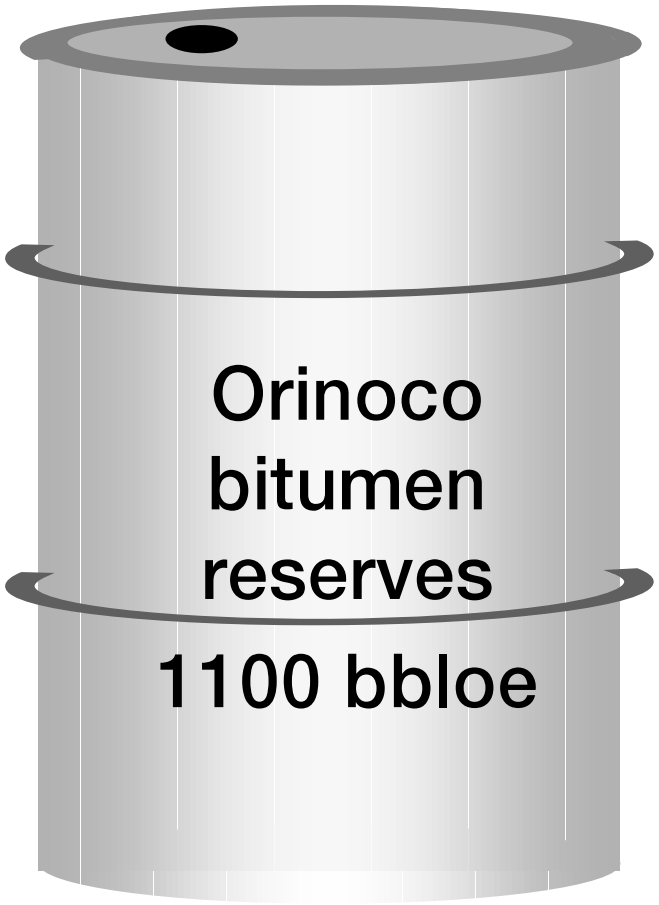

WÄRTSILÄ

Relative fuel costs October 2000

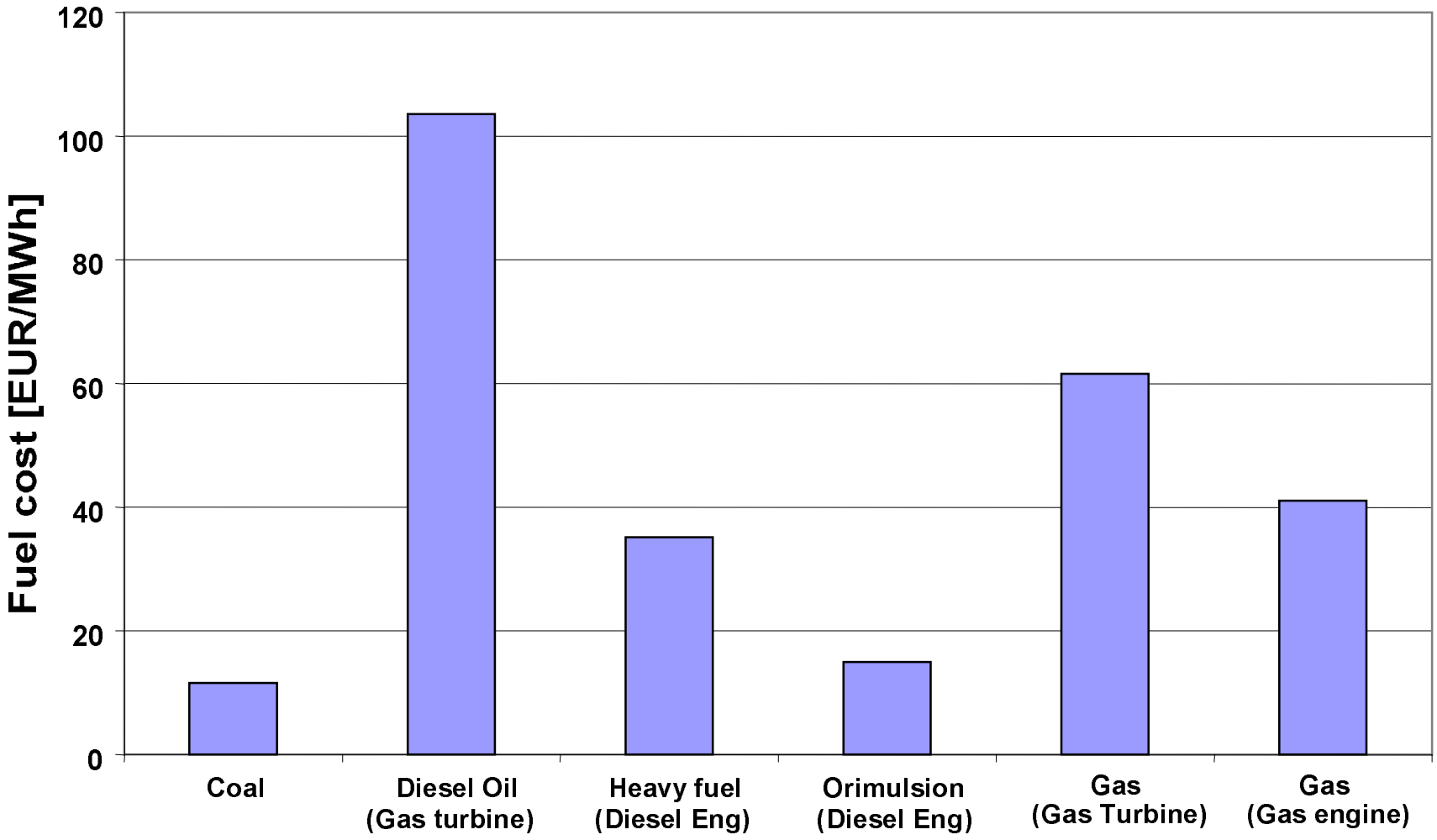

Technology

WÄRTSILÄ

Common Rail system layout for Orimulsion

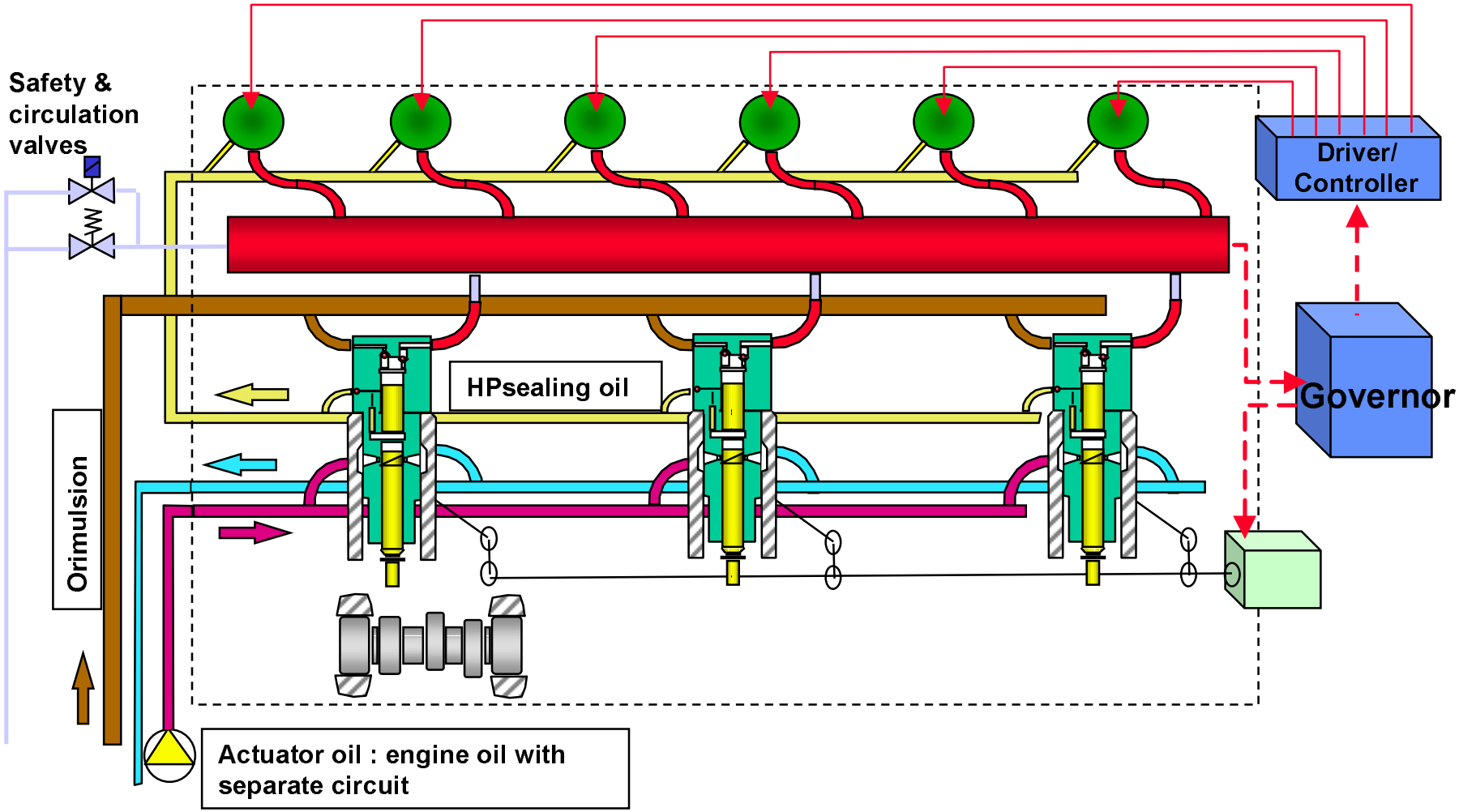

Technology

WÄRTSILÄ

Alternatives of solar energy

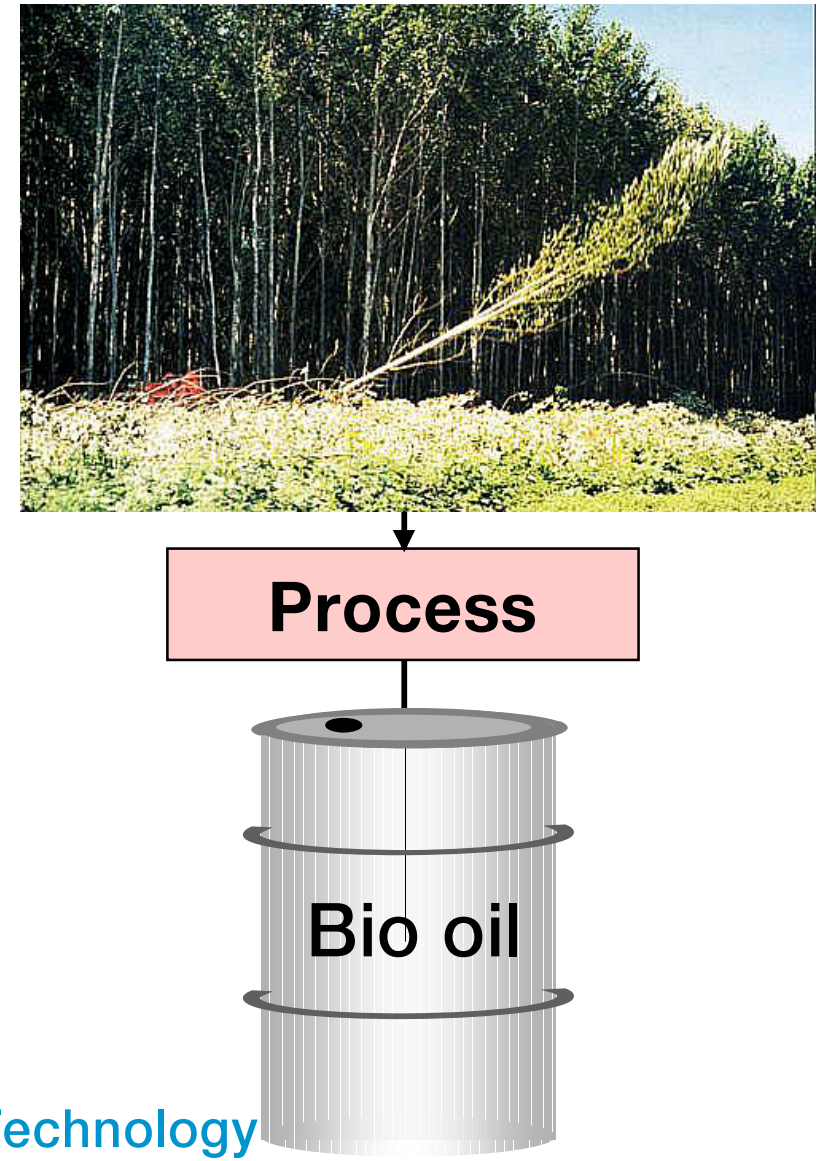

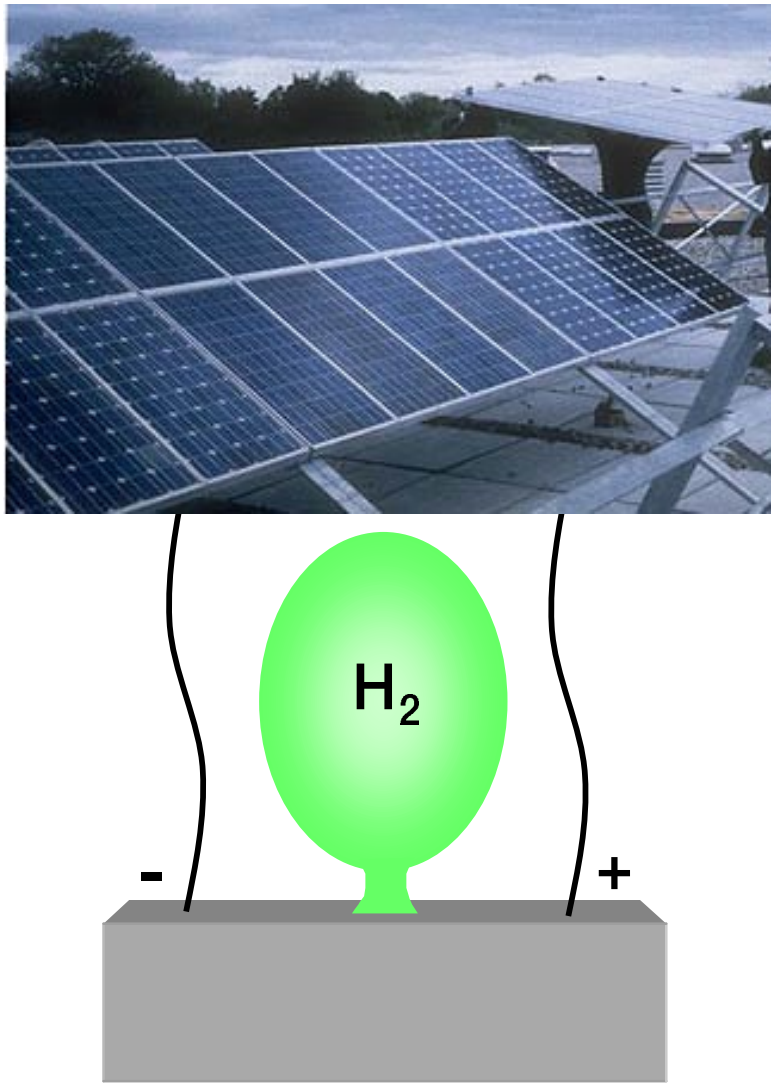

Technology

WÄRTSILÄ

The reciprocating engine

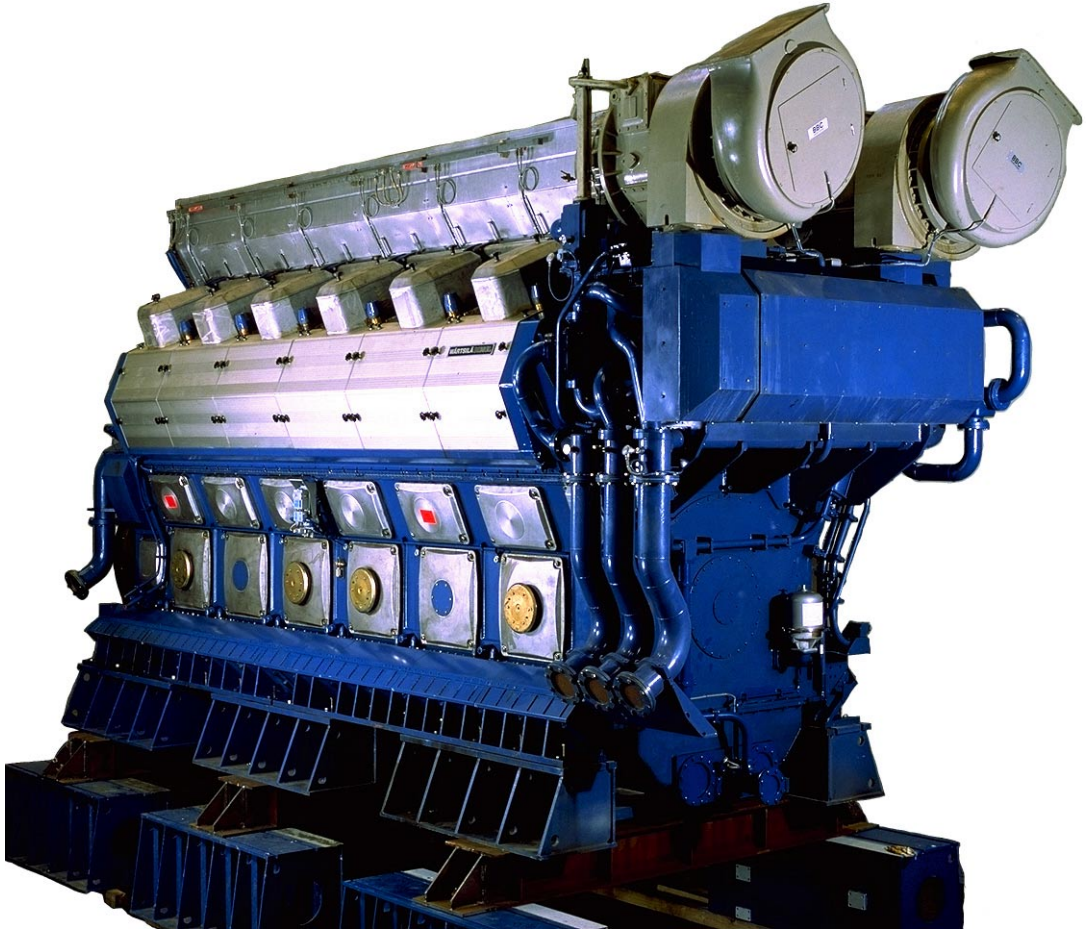

Equal or best on all possible fuels

Technology

WÄRTSILÄ