December 1999

Environmental Technology Verification Report

Katec, Inc. Aerosolv®
Aerosol Can Recycling System

Prepared by

Department of Toxic Substances Control

Under a cooperative agreement with

U.S. Environmental Protection Agency

December 1999

Environmental Technology Verification Report

Katec, Inc

Aerosolv®
Aerosol Can Recycling System

By

California Environmental Protection Agency
Department of Toxic Substances Control
Office of Pollution Prevention and Technology Development
Sacramento, California 85814-0806

Notice

The U.S. Environmental Protection Agency (EPA), through its Office of Research and Development has financially supported and collaborated in the extramural program described here. This document has been peer reviewed by the Agency and recommended for public release. Mention of trade names or commercial products does not constitute endorsement or recommendation by the EPA for use.

This verification is limited to the use of the Katec Aerosolv® Aerosol Can Recycling System for treatment of waste aerosol which contain paints or non-halogenated hydrocarbon lubricants and cleaners. EPA and Department of Toxic Substances Control (DTSC) make no express or implied warranties as to the performance of the Katec Aerosolv® Aerosol Recycling System technology. Nor does EPA and DTSC warrant that the Katec Aerosolv® Aerosol Can Recycling System is free from any defects in workmanship or materials caused by negligence, misuse, accident or other causes.

Foreword

The U.S. Environmental Protection Agency (EPA) is charged by Congress with protecting the Nations's air, water, and land resources. Under a mandate of national environmental laws, the Agency strives to formulate and implement actions leading to a compatible balance between human activities and the ability of natural systems to support and nurture life. To meet this mandate, the EPA's Office of Research and Development (ORD) provides data and science support that can be used to solve environmental problems and to build the scientific knowledge base needed to manage our ecological resources wisely, to understand how pollutants affect our health, and to prevent or reduce environmental risks.

The Environmental Technology Verification (ETV) Program has been established by the EPA, to verify the performance characteristics of innovative environmental technologies across all media and to report this objective information to the permitters, buyers, and users of the technology, thus substantially accelerating the entrance of new environmental technologies into the marketplace. Verification Organizations oversee and report verification activities based on testing and Quality Assurance protocols developed with input from major stakeholders and customer groups associated with the technology area. At present, there are twelve environmental technology areas covered by ETV. Information about each of the environmental technology areas covered by ETV can be found on the Internet at http://www.epa.gov/etv.htm

Effective verifications of pollution prevention and treatment technologies for hazardous waste are needed to improve environmental quality and to supply cost and performance data to select the most appropriate technology. Through a competitive cooperative agreement, the California Department of Toxic Substances Control (DTSC) was awarded EPA funding and support to plan, coordinate, and conduct such verification tests, for "Pollution Prevention and Waste Treatment Technologies" and report the results to the community at large. Information concerning this specific environmental technology area can be found on the Internet at http:\|www.epa.gov/etv/03/03_main.htm.

The following report reviews the performance of the Katec, Inc. Aerosolv® Aerosol Can Recycling System. The Aerosolv® System is used for puncturing and draining hazardous waste aerosol cans such that the cans may be recycled as scrap metal.

Acknowledgment

DTSC wishes to acknowledge the support of all those who helped plan, implement the verification activities, and prepare this report. In particular, a special thanks to Ms. Norma Lewis, Project Manager, and Mr. Sam Hayes and Ms. Lauren Drees, Quality Assurance Managers, of EPA's National Risk Management Research Laboratory in Cincinnati, Ohio.

DTSC would also like to thank the U.S. Navy Public Works Center, San Diego for their support and for providing the facility and necessary resources to conduct the verification field test. Additionally DTSC would like to thank Mr. Michael Campbell of Katec, Inc. for his participation in this Environmental Technology Verification Pilot Project.

THE ENVIRONMENTAL TECHNOLOGY VERIFICATION PROGRAM

U.S. Environmental Protection

ETV JOINT VERIFICATION STATEMENT

TECHNOLOGY TYPE:	**AEROSOL CAN PUNCTURING AND DRAINING**
APPLICATION:	**TREATMENT OF HAZARDOUS WASTE AEROSOL CANS CONTAINING PAINTS OR NON-HALOGENATED HYDROCARBON LUBRICANTS AND CLEANERS**
TECHNOLOGY NAME:	**AEROSOLV® AEROSOL CAN RECYCLING SYSTEM**
COMPANY:	**KATEC, INC.**
ADDRESS:	**P.O. BOX 3399** PHONE: **(800) 843-6808**
	VIRGINIA BEACH, VA 23454 FAX: **(757) 428-5757**
WEB SITE	**http://www.aerosolv.com**
EMAIL:	**katec@aerosolv.com**

The U.S. Environmental Protection Agency has created the Environmental Technology Verification (ETV) Program to facilitate the deployment of innovative or improved environmental technologies through performance verification and information dissemination. The goal of the ETV Program is to further environmental protection by substantially accelerating the acceptance and use of innovative, improved, and more cost-effective technologies. The ETV Program is intended to assist and inform those individuals in need of credible data for the design, distribution, permitting, and purchase of environmental technologies.

ETV works in partnership with recognized testing organizations to objectively and systematically document the performance of commercial ready environmental technologies. Together, with the full participation of the technology developer, they develop plans, conduct tests, collect and analyze data, and report findings. Verifications are conducted according to an established workplan with protocols for quality assurance. Where existing data are used, the data must have been collected by independent sources using similar quality assurance protocols.

EPA's ETV Program, through the National Risk Management Research Laboratory (NRMRL), has partnered with the California Department of Toxic Substances Control (DTSC) under an ETV Pilot Project to verify pollution prevention, recycling, and waste treatment technologies. This verification statement provides a summary of performance results for the Katec, Inc. **Aerosolv® Aerosol Can Recycling System**.

TECHNOLOGY DESCRIPTION

The Katec, Inc. MODEL 6000 AEROSOLV® AEROSOL CAN RECYCLING SYSTEM (hereinafter referred to as the Aerosolv® System) is a waste aerosol can puncturing and draining technology. The technology punctures and drains waste aerosol cans while collecting their liquid contents in a storage drum and treating gases and vapors with a carbon filter. Treated waste aerosol cans may then be recycled as scrap metal. The collected liquids and used carbon filters are classified as hazardous or non-hazardous waste and managed accordingly. The system evaluated consists of four components: the Aerosolv® Puncturing Unit, a liquid collection drum, a coalescing filter and flexible hose, and a carbon canister with a Colorimetric Indicator. The liquid collection drum, a standard 55-gallon closed-head drum, is supplied by the user. Katec also provides an instruction manual on how to operate and maintain the system.

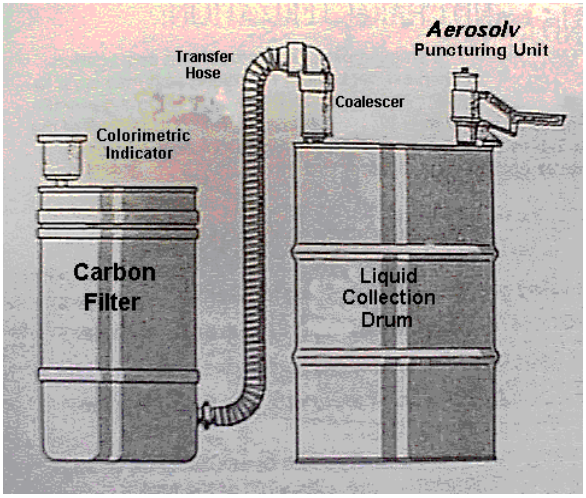

The *Aerosolv® Puncturing Unit* screws into the 2-inch bung hole of a standard 55-gallon drum (i.e., the liquid collection drum). To operate the Aerosolv® Puncturing Unit, the spray nozzle is first removed from an aerosol can, then the can is placed upside down into the top of the unit. The sliding top plate assembly is swung over the can and then depressed to push the can down against a flat silicone gasket inside the unit. After the aerosol can is secured in place, a spring-loaded handle on the unit is pushed down to pierce the dome of the can with a carbide-tipped puncture pin. Gradually releasing the handle allows the aerosol can contents to discharge through the bottom of the unit into the liquid collection drum. The handle must be released slowly to avoid rapid release of the can contents and the potential for uncontrolled releases of the gases and liquids. As the can is emptied, vapors and gases pass from the collection drum through the coalescing filter into the carbon filter. After the contents of the can have been allowed to drain (approximately 30 seconds to two minutes), the can is removed from the unit for recycling as scrap metal. For viscous materials such as paint, the can should be vigorously shaken before puncturing and more than one puncture hole may be necessary. To make additional drain holes the can is rotated and punctured again before being removed from the unit.

EVALUATION DESCRIPTION

The evaluation of the Model 6000 Aerosolv® System was designed to provide the data necessary to draw conclusions on the technology's performance, reliability and safety, as well as to identify the critical operating parameters and conditions. The evaluation consisted of a field test to provide independent data on the technology's performance and safety. Supporting documents and information submitted by Katec which describe their technology and its intended operation and maintenance were also reviewed. Additionally, the Aerosolv® 6000 Instruction Manual, the field test health and safety plan, and the field test results were reviewed with respect to protection of worker health and safety.

DTSC prepared the Technology Evaluation Field Test Plan which identified specific field test objectives, data quality objectives, testing procedures, and roles and responsibilities for performing the field test. Development of the field test plan was coordinated with Katec, Inc. and the U.S. Navy Public Works Center, San Diego (Navy), as well as with the ETV Program.

DTSC assumed the primary oversight role and was responsible for independent, third party verification of the field test. The Navy provided the necessary resources for conducting the field test. The Navy conducted the field tests during the period from August 3 through November 29, 1998 at the U.S. Navy Public Works Center facility in San Diego, California. The Navy is a Katec customer and agreed to provide facilities, staff, and waste aerosol cans from their hazardous waste storage facility for conducting the field test. Following the completion of the field test, the Navy submitted their report providing the field test data collected and a summary of field test results.

The performance of the Aerosolv® System was evaluated for three categories of aerosol can products: paints; hydrocarbon cleaners and lubricants; and chlorinated solvent cleaners. The selection of specific products to be used for the field tests was based on the availability of a sufficient quantity of the waste aerosol cans at the Navy storage facility, and the desire to test the performance and safety of the technology on products with a range of physical and chemical properties. Additionally, the selection of specific products within each product category was based on the need to gather data on emissions, carbon capacity, and the effectiveness of the Colorimetric Indicator. Eco Sure brand high solids enamel and primer paints, and So Sure brand standard lacquer and enamel paint products were selected to represent the paint products category. These paints contained propane, butane, isobutane and dimethyl ether propellants; aliphatic and aromatic hydrocarbons; and ketones and other oxygenated solvents. Some of the paints contained dichloromethane. Brakleen, manufactured by CRC Chemicals, was selected to represent the chlorinated solvent cleaner category and contained primarily carbon dioxide propellant, tetrachloroethene, and trichloroethene, along with some hydrocarbon solvents. Corrosion Preventative Compound (CPC) manufactured by LHB Industries was selected to represent the hydrocarbon cleaners and lubricants category. The CPC contained propane, butane, isobutane, and Freon propellants; aliphatic and aromatic hydrocarbons; and Freon, aliphatic, and olefinic chlorinated solvents.

A series of seven (7) test runs were conducted to evaluate the Katec Aerosolv® System for treating the three types of aerosol can products. During the seven test runs a total of 2270 waste aerosol cans were punctured and drained using the Aerosolv® System. This included 1690 paint aerosol cans, 350 CPC aerosol cans and 230 Brakleen aerosol cans. For each of the three product types, field test measurements were made to assess removal effectiveness, system capture efficiency, effectiveness of the carbon filter and Colorimetric Indicator, and protection of worker heath and safety. Field test measurements made during each test run consisted of:

- Weighing each aerosol can before and after treatment to determine the amount removed.
- Determining the tare weight of a representative number of cans of each product type.
- Weighing the Aerosolv® System before and after each test run to determine the amount captured.
- Continuously monitoring total hydrocarbon emissions immediately downwind of the Aerosolv® Puncturing Unit and at the carbon exhaust using a Total Vapor Analyzer with a Flame Ionization Detector (FID) calibrated to methane.
- Collecting personal monitoring and area samples to evaluate worker exposure during operation of the Aerosolv® System for each of the three product types. Samples were collected and analyzed using OSHA Methods 07 and 48 for the target constituents expected to be in the products tested.
- GC/MS analysis by EPA Method 8260 of liquid collection drum samples for each product type to confirm the composition of the products being tested.
- Monitoring wind speed with a Met-One wind speed indicator and Campbell Scientific data logger .

Details of the evaluation, including data summaries and discussion of results may be found in the report entitled "Environmental Technology Verification Report, Aerosolv® Aerosol Can Recycling System ."

VERIFICATION OF PERFORMANCE

Performance results of Katec, Inc.'s Model 6000 Aerosolv® Aerosol Can Recycling System are as follows:

- *Removal To 3% Capacity:* The Aerosolv® System effectively removed the residual contents for waste aerosol cans less than 25% full. In six of the seven test runs conducted for the field test, the Aerosolv® System removed the residual contents in aerosol cans runs to below 3% of their original net contents (upper 95% confidence limit of the mean), the federal definition of an empty container. For the one paint test run which did not meet this objective, Test Run #1, the Aerosolv® System removed the residual contents to 3.41% (upper 95% confidence limit). As expected due to higher solids content in paint products, the Aerosolv® System was less effective in removing residuals from paint products than for the other two product types tested. Additionally, the two paint test runs involving fuller cans showed higher percent residuals remaining.

- *Capture Efficiency:* The Aerosolv® System captured 83.2%, 96.8% and 94.9% (lower 90% confidence limits of the means) of the liquid and gaseous contents removed from the respective paint, CPC and Brakleen products tested. The amounts not captured were lost to the atmosphere due to fugitive emissions around the puncturing device or emissions from the carbon filter.

- *Carbon Filter Effectiveness:* The carbon filter was effective in capturing emissions from the Aerosolv® System during the puncturing and draining aerosol cans. The capacity of the carbon filter, however, was limited. Plots of the breakthrough curves indicate that the emissions increase rapidly as the emission levels approach the carbon filter changeout criterion of 100,000 ppm total hydrocarbon emissions. The field test results show that the Aerosolv® System can process at least 187 waste aerosol paint cans (lower 90% confidence limit) with an average fullness of 17% before the filter reaches the changeout criterion. The field test results also indicate that the mass adsorbed on the carbon filter before changeout was about 60% greater for the CPC products tested than for the paint products. This is probably due to the propellant in the CPC product tested being one that is known to strongly adsorb onto carbon, while other propellants do not adsorb as strongly. A filter was not saturated during the Brakleen aerosol product test runs and a relatively low mass of tetrachloroethene was adsorbed onto the carbon filter.

- *Carbon Filter Monitoring:* The Colorimetric Indicator did not work as claimed and did not effectively monitor the carbon filter for breakthrough. Based on the field testing experience, the best approach to determine when to replace the carbon filter is to continually monitor the carbon filter exhaust with a TVA-FID monitor (or equivalent). The next best approach would be to weigh the carbon filter before and during use to determine when it has reached capacity.

- *Katec Aerosolv® Puncturing Unit:* Based on observations during the field test, certain mechanical components of the Aerosolv® Puncturing Unit lack reliability. The lock knob failed on one Aerosolv® Puncturing Unit after less than 350 cans and failed on another after approximately 1000 cans. In each case, the failure rendered the unit inoperable. On another unit, the puncture pin was observed to protrude into the barrel of the unit when in the retracted position, preventing proper operation.

- *Katec Aerosolv® System Compatibility with Aerosol Can Products:* Based on observations made during the field test, the Aerosolv® System is not compatible with compounds present in chlorinated solvent products or with hydrocarbon cleaners and lubricants which contain chlorinated propellants. The hydrocarbon cleaner/lubricant used during the field test contained Freon propellants as well as Freon-113 solvent, while the Brakleen product contained tetrachloroethene. For these product types the gasket in the unit swelled such that a can would not seal properly before puncturing. It is unknown whether acetone or other ketones also present in the hydrocarbon lubricant/cleaner might have also been incompatible with the gasket material. Because of the risk of uncontrolled emissions during the puncturing operation, the Aerosolv® System should not be used for products containing halogenated compounds or other constituents which are not compatible with the seal and gasket materials.

- *Liquid Collection Drum:* The technology's performance and safety when the liquid collection drum had a minimum of headspace was not fully evaluated during the field test. The 55-gallon liquid collection drums used during the field test were never filled to more than 29% of their capacity, well below the 70% maximum capacity specified in the Model 6000 Instruction Manual. Reduced headspace would mean higher pressures in the liquid collection drum during puncturing operations and consequently a higher potential for emissions and releases around the puncturing unit's gasket and seals.

- *Worker Health and Safety*: Based on field test results, it could not be determined that potential exposures will not occur in the absence of appropriate engineering and administrative controls, or personal protective equipment. Therefore, each specific operation should be evaluated to determine the appropriate controls and personal protective equipment required to address potential worker health and safety concerns.

Results of the verification show that the Katec, Inc. Model 6000 Aerosolv® Aerosol Can Recycling System is capable of treating hazardous waste aerosol cans which are less than 25% full such that they are non-hazardous and may be recycled as scrap metal. The Aerosolv® System did not function properly for use with aerosol can products containing halogenated hydrocarbons because of the incompatibility of these solvents or propellants with the seal materials used in the Aerosolv® Puncturing Unit. End-users should follow procedures for operating and maintaining the technology described in Katec, Inc.'s Aerosolv® 6000 Instruction Manual.

End-users should contact their appropriate local, state, or federal regulatory authority regarding required permits for hazardous waste treatment and air emissions, and regarding the management of the collected liquid residuals, spent carbon filters, and treated aerosol cans.

Originally Signed by
E Timothy Oppelt
December 21, 1999

E. Timothy Oppelt Date
Director
National Risk Management Laboratory
Office of Research and Development
United States Environmental
Protection Agency

Originally Signed by
James Allen
December 24, 1999

James T. Allen, Ph.D., Chief Date
Office of Pollution Prevention
and Technology Development
Department of Toxic Substances Control
California Environmental Protection Agency

Availability of Verification Statement and Report

Copies of the public Verification Statement and
Verification Report are available from the following:

1. **U.S. EPA**

   Web site: http://www.epa.gov/etv/library.htm *(electronic copy)*

2. **Department of Toxic Substances Control**
   Office of Pollution Prevention and
   Technology Development
   P.O. Box 806
   Sacramento, California 95812-0806

   Web site: http://www.dtsc.ca.gov/sppt/opptd/etv/txppetvp.htm
   or http://www.epa.gov/etv *(click on partners)*

(Note: Appendices are not included in the Verification Report
and are available from DTSC upon request.)

NOTICE: Verifications are based on an evaluation of technology performance under specific, predetermined criteria and the appropriate quality assurance procedures. EPA and Cal/EPA make no expressed or implied warranties as to the performance of the technology. The end-user is solely responsible for complying with any and all applicable federal, state, and local requirements. Mention of commercial product names does not imply endorsement.

TABLE OF CONTENTS

Notice ii

Foreword iii

Acknowledgment iv

VERIFICATION STATEMENT v

Executive Summary 1

Section 1. Introduction 4

Section 2. Description of Technology 6

Section 3. Field Test Verification Objectives 10

Section 4. Verification Activities and Results 12

4.1 Aerosol Can Products Tested 12
4.2 Field Test Operations. 15
4.3 Field Test Runs Conducted 18
4.4 Liquid Collection Drum Sample Analyses 19
4.5 Results: Objective 1, Removal Effectiveness 20
4.6 Results: Objective 2, System Capture Efficiency 24
4.7 Results: Objective 3, Carbon Filter Effectiveness 25
4.8 Results: Objective 4, Assess Worker Health & Safety 28
4.9 Field Test Observations: Equipment Design and Operation 30

Section 5. Regulatory Considerations 33

5.1 Regulation of Waste Aerosol Cans 33
5.2 Hazardous Waste Treatment Permit Requirements 33
5.3 Hazardous Waste Management Benefit 34
5.4 Air District Permit Requirements 35

Section 6. Conclusions 37

TABLES

Table 1 Colorimetric Indicator Potassium Permanganate on Zeolite Efficiency Rating and Theoretical Capacity 9

Table 2 Aerosol Can Products To Be Tested 12

Table 3 Typical Constituents of Interest For Classes of Aerosol Cans Being Evaluated 13

Table 4 Summary of Aerosol Can Products Treated for Field Test Runs 18

Table 5 Analytical Results of Samples Collected from Liquid Collection Drum Liquids, EPA Method 8260 20

Table 6 Summary of Residual Fraction and Removal Efficiency Results 22

Table 7 Katec Aerosolv® Technology Field Tests - System Capture Efficiency Results 24

Table 8 Katec Field Test Results: Carbon Filter Performance Summary 26

FIGURES

Figure 1 Schematic of Katec Aerosolv® Aerosol Can Recycling System 6

Figure 2 Schematic of Katec Aerosolv® Puncturing Unit 7

Figure 3 Aerosolv Puncturing Unit, Liquid Collection Drum and Coalescing Filter Shown with Monitoring Equipment During Field Test 17

Figure 4 Carbon Filter with Colorimetric Indicator Shown with Monitoring Equipment During Field Testt 17

Figure 5 Inner O-ring Showing Wear 31

Figure 6 Outer O-ring 31

Figure 7 Carbon Filter with Upper Fiber Layer Removed 32

Figure 8 Carbon Filter with Top Removed 32

APPENDICES

Appendix A: Katec Field Test Results

Appendix A-1: Tare Weight, Residual and Removal Fraction: Objective 1
Appendix A-2: Assembly Weight Measurements, Amount Captured : Liquid Collection Drum and Carbon Filter
Appendix A-3: Aerosolv® System Loading (Pre- and Post-Treatment Aerosol Can Weights)
Appendix A-4: Carbon Filter Exhaust FID Monitoring Data Plots
Appendix A-5: Fixed FID Downwind Monitoring Data Plots and Summary
Appendix A-6: Wind Monitoring Data Plots

Appendix B: Field Test Plan

Technology Evaluation Field Test Plan for Katec Aerosolv® Aerosol Can Puncturing & Draining Technology, July 28, 1998; Department of Toxic Substances Control, Office of Pollution Prevention and Technology Development.

Appendix C: U.S. Navy Field Test Report

Aerosolv® Aerosol Can Recycling Technology, Field Test Demonstration, Summary of Results, August 5, 1998 - November 29, 1998, dated January 28, 1999; George A Weaver Jr. and Christina Graulau, Navy Public Works Center Environmental Department, San Diego.

Note: Appendices are not included in the Verification Report and are available upon written request to DTSC at the following address:

Department of Toxic Substances Control
Office of Pollution Prevention and
Technology Development
P.O. Box 806
Sacramento, California 95812-0806

LIST OF ABBREVIATIONS AND ACRONYMS

ACGIH	American Conference of Governmental Industrial Hygienists
ALARA	as Low as Reasonably Attainable
APCD	Air Pollution Control District
AQMD	Air Quality Management District
BACT	Best Available Control Technology
CCR	California Code of Regulations
CFC-113	1,1,2-trichloro-1,2,2-trifluoroethane
CFR	Code of Federal Regulations
CPC	Corrosion Preventative Compound
DL`	Detection Limit
DTSC	California Department of Toxic Substances Control
EPA	United States Environmental Protection Agency
EPCRA	Emergency Planning and Community Right-to-Know Act
ETV	Environmental Technology Verification
FID	Flame Ionization Detector
GC/MS	Gas Chromatograph / Mass Spectrometer
HML	Hazardous Materials Laboratory
IDLH	Immediately Dangerous to Life and Health
IH	Industrial Hygienist
LCL	Lower Confidence Limit
LEL	Lower Explosive Limit
LHB	LHB Industries, Berkeley, Missouri
mg/kg	milligrams/kilogram
MSDS	Material Safety Data Sheet
NIOSH	National Institute for Occupational Safety and Health
NRMRL	National Risk Management Research Laboratory
NSR	New Source Review
ORD	EPA's Office of Research and Development
OSHA	Occupational Safety and Health Administration
PEL	Permissible Exposure Limit
ppm	Parts per Million
PSD	Prevention of Significant Deterioration
RCRA	Resource Conservation and Recovery Act
SOP	Standard Operating Procedure
STEL	Short Term Exposure Limit
TBACT	Best Available Control Technology for Toxics
TVA	Total Vapor Analyzer
TWA	Time Weighted Average
UCL	Upper Confidence Limit
U.S. EPA	United States Environmental Protection Agency
VOA	Volatile Organics Analysis
VOC	Volatile Organic Compound

Executive Summary

The U.S. Environmental Protection Agency (EPA) is charged by Congress with protecting the nation's natural resources. EPA created the Environmental Technology Verification (ETV) Program to facilitate the deployment of innovative technologies through performance verification and information dissemination. The goal of the ETV Program is to enhance environmental protection by substantially accelerating the acceptance and use of innovative, improved, and cost-effective technologies. The ETV Program is intended to assist and inform those individuals in need of credible data for the design, distribution, permitting, and purchase of commercially-ready environmental technologies.

EPA's ETV Program, through the National Risk Management Research Laboratory (NRMRL), has partnered with the California Department of Toxic Substances Control (DTSC) under an ETV Pilot Project to verify pollution prevention, recycling, and waste treatment technologies. The Pilot Project focuses on, but is not limited to, several EPA "Common Sense Initiative" industry sectors: printing; electronics; petroleum refining; metal finishing; auto manufacturing; and iron and steel manufacturing.

Candidate technologies for these programs originate from both the private and public sectors and must be market-ready. Through the ETV Pollution Prevention, Recycling, and Waste Treatment Pilot Project, developers are given the opportunity to have the performance of their technology or product tested and evaluated under realistic laboratory or field conditions. By completing the verification and distributing the results, EPA establishes a baseline for acceptance and use of these technologies.

This pilot project evaluates the performance of the Model 6000 Aerosolv® Aerosol Can Recycling System manufactured and distributed by Katec, Inc. The objectives of this evaluation is to verify, through field testing the following performance parameters:

- Removal Effectiveness. The ability of the Aerosolv® System to treat aerosol cans to less than 3.0% of the original can contents or capacity, the federal definition of an empty container; also, the percent of the contents in untreated waste aerosol cans that the Aerosolv® System can remove.

- System Capture Efficiency. The ability of the Aerosolv® System to capture 90% or greater of the gaseous and liquid contents removed from the waste aerosol cans.

- Carbon Filter Effectiveness. The amount of aerosol cans and their contents that the Aerosolv® System can process before the carbon filter becomes saturated and needs to be replaced;

- Carbon Filter Monitoring. The ability of the Katec, Inc. Colorimetric Indicator to determine when the carbon filter is spent and needs replacement.

- Worker Health & Safety. The ability of the Aerosolv® technology to operate in compliance with levels and standards established in state and federal regulations for protection of worker health and safety.

Technology Description

The Katec, Inc. **MODEL 6000 AEROSOLV® AEROSOL CAN RECYCLING SYSTEM** is a waste aerosol can puncturing and draining technology. The technology punctures and drains waste aerosol cans while collecting their liquid contents in a storage drum and treating gases and vapors with a carbon filter. Treated waste aerosol cans may be recycled as scrap metal. The collected liquids and used carbon filters are classified as hazardous or non-hazardous waste and managed accordingly. The system that was evaluated consists of five components: The Aerosolv® Puncturing Unit, a liquid collection drum, a coalescing filter and flexible hose, a carbon canister, and a Colorimetric Indicator. The liquid collection drum, a standard 55-gallon closed-head drum, is supplied by the user.

Evaluation Approach

The evaluation consisted of:

- Review of the Katec Inc. Model 6000 Instruction Manual;
- Development of a Field Test Plan by DTSC to independently evaluate the technology with respect to identified performance objectives for removal effectiveness, system capture efficiency, carbon filter effectiveness, and protection of worker health and safety;
- Review of the Health and Safety Plan developed by the U.S. Navy Public Works Center (Navy) for the Field Test;
- Implementation of the Field Test Plan by the Navy at their facility in San Diego. The field test included seven separate test runs treating of over 2000 waste aerosol cans and three different types of aerosol can products: paints, hydrocarbon lubricants and cleaners, and chlorinated solvent cleaners;
- Independent oversight of the field test by DTSC staff.

Verification of Performance

Performance results of the Katec, Inc.'s Model 6000 Aerosolv Aerosol Can Recycling System are as follows:

- *Removal To 3% Capacity:* The Aerosolv® System effectively removed the residual contents for waste aerosol cans less than 25% full. In six of the seven test runs conducted for the field test, the Aerosolv® System removed the residual contents in aerosol cans runs to below 3% of their original net contents (upper 95% confidence limit of the mean), the federal definition of an empty container. For the one paint test run which did not meet this objective, Test Run #1, the Aerosolv® System removed the residual contents to 3.41% (upper 95% confidence limit). As expected due to higher solids content in paint products, the Aerosolv® System was less effective in removing residuals from paint products than for the other two product types tested. Additionally, the two paint test runs involving fuller cans showed higher percent residuals remaining.

- *Capture Efficiency:* The Aerosolv® System captured 83.2%, 96.8% and 94.9% (lower 90% confidence limits of the means) of the liquid and gaseous contents removed from the respective paint, CPC and Brakleen products tested. The amounts not captured were lost to the atmosphere due to fugitive emissions around the puncturing device or emissions from the carbon filter.

- *Carbon Filter Effectiveness:* The carbon filter was effective in capturing emissions from the Aerosolv® System during the puncturing and draining aerosol cans. The capacity of the carbon filter, however, was limited. Plots of the breakthrough curves indicate that the emissions increase rapidly as the emission levels approach the carbon filter changeout criterion of 100,000 ppm total hydrocarbon emissions. The field test results show that the Aerosolv® System can process at least 187 waste aerosol paint cans (lower 90% confidence limit) with an average fullness of 17% before the filter reaches the changeout criterion. The field test results also indicate that the mass adsorbed on the carbon filter before changeout was about 60% greater for the CPC products tested than for the paint products. This is probably due to the propellant in the CPC product tested being one that is known to strongly adsorb onto carbon, while other propellants do not adsorb as strongly. A filter was not saturated during the Brakleen aerosol product test runs and a relatively low mass of tetrachloroethene was adsorbed onto the carbon filter.

- *Carbon Filter Monitoring:* The Colorimetric Indicator did not work as claimed and did not effectively monitor the carbon filter for breakthrough. Based on the field testing experience, the best approach to determine when to replace the carbon filter is to continually monitor the carbon filter exhaust with a TVA-FID monitor (or equivalent). The next best approach would be to weigh the carbon filter before and during use to determine when it has reached capacity.

- *Katec Aerosolv® Puncturing Unit:* Based on observations during the field test, certain mechanical components of the Aerosolv® Puncturing Unit lack reliability. The lock knob failed on one Aerosolv® Puncturing Unit after less than 350 cans and failed on another after approximately 1000 cans. In each case, the failure rendered the unit inoperable. On another unit, the puncture pin was observed to protrude into the barrel of the unit when in the retracted position, preventing proper operation.

- *Compatibility with Aerosol Can Products:* Based on observations made during the field test, the Aerosolv® System is not compatible with compounds present in chlorinated solvent products or with hydrocarbon cleaners and lubricants which contain chlorinated propellants. The hydrocarbon cleaner/lubricant used during the field test contained Freon propellants as well as Freon-113 solvent, while the Brakleen product contained tetrachloroethene. For these product types the gasket in the unit swelled such that a can would not seal properly before puncturing. It is unknown whether acetone or other ketones also present in the hydrocarbon lubricant/cleaner might have also been incompatible with the gasket material. Because of the risk of uncontrolled emissions during the puncturing operation, the Aerosolv® System should not be used for products containing halogenated compounds or other constituents which are not compatible with the seal and gasket materials.

- *Liquid Collection Drum:* The technology's performance and safety when the liquid collection drum had a minimum of headspace was not fully evaluated during the field test. The 55-gallon liquid collection drums used during the field test were never filled to more than 29% of their capacity, well below the 70% maximum capacity specified in the Model 6000 Instruction Manual. Reduced headspace would mean higher pressures in the liquid collection drum during puncturing operations and consequently a higher potential for emissions and releases around the puncturing unit's gasket and seals.

- *Worker Health and Safety*: Based on field test results, it could not be determined that potential exposures will not occur in the absence of appropriate engineering and administrative controls, or personal protective equipment. Therefore, each specific operation should be evaluated to determine the appropriate controls and personal protective equipment required to address potential worker health and safety concerns.

Section 1.
Introduction

Background

Aerosol cans which have not been properly emptied present a disposal problem due to their remaining hazardous contents, including their pressurized propellants which may be reactive or flammable. Waste aerosol cans which are not considered empty under state and federal regulations may be considered hazardous wastes and must be managed accordingly. If disposed of as hazardous waste, their quantities and resulting bulk make disposal costly. As an alternative, technologies have been developed to puncture and drain the aerosol cans, allowing the drained can to be recycled as scrap metal and the residual liquids to be collected for proper management. Some systems have been developed which capture the gaseous emissions from the puncturing and draining operation.

Aerosolv® Aerosol Can Recycling System

Katec, Inc. has developed the Aerosolv® Aerosol Can Recycling System (Aerosolv® System) to meet the need for management of spent aerosol cans. Katec's Aerosolv® Puncturing Unit threads onto the two inch bung hole of an industry standard 55-gallon drum. A can is placed into the unit, and a lever arm is manually depressed to puncture the can. Liquid from the punctured can is forced out by residual pressure, or gravity drains, into the drum. Aerosol droplets are trapped by a coalescing filter which screws onto the 3/4 inch bung hole of the drum. Vapors and propellant gases pass through the coalescing filter and into a carbon filter where they are adsorbed.

Evaluation Approach

The evaluation of the Aerosolv® System was designed to provide the data necessary to draw conclusions on the technology's performance, reliability and safety. Additionally, the critical operating parameters and conditions related to the technology's performance, reliability and safety were to be identified. The evaluation included a review of supporting documents and information submitted by Katec which describes their technology and its intended operation and maintenance, and a field test to provide independent data on the technology's performance and safety. A key document which Katec submitted, the Aerosolv® 6000 Instruction Manual, was reviewed and revised several times over the course of the evaluation.

The field test was carried out at the U.S. Navy (Navy) Public Works Center, San Diego. The Navy is a Katec customer and agreed to provide facilities, staff, and waste aerosol cans from their hazardous waste storage facility for conducting the field test. Prior to commencing the field test, the Department of Toxic Substances Control (DTSC) prepared a Field Test Plan to identify specific field test objectives, data quality objectives, testing procedures, and roles and responsibilities for performing the field test. The Navy assumed overall responsibility for conducting the field test. DTSC staff provided independent oversight and were present to observe many, but not all, of the field test activities. The agreed-upon Field Test Plan specified that the Navy would record all measurements and observations made during the field test. Following the completion of the field test, the Navy submitted their report providing the field test

data collected and a summary of field test results. The Navy also provided field log notes compiled by the Navy industrial hygienist during the field test. Additionally, DTSC staff observations made during the field test were included as part of the evaluation.

Previous versions of the technology which Katec has marketed had been modified and did not contain the carbon filter component. Therefore, reliability and performance information was only obtained through the above referenced field testing. No data were available to assess long term reliability and performance of the specific Aerosolv® System being evaluated.

Section 2.
Description of Technology

The Katec, Inc. **MODEL 6000 AEROSOLV® AEROSOL CAN RECYCLING SYSTEM** (hereinafter referred to the Aerosolv® System) is a waste aerosol can puncturing and draining technology. The technology punctures and drains waste aerosol cans while collecting their liquid contents in a storage drum and treating gases and vapors with a carbon filter. Treated waste aerosol cans may be recycled as scrap metal. The collected liquids and used carbon filters are classified as hazardous or non-hazardous waste and managed accordingly. The system that was evaluated consists of five components: The Aerosolv® Puncturing Unit, a liquid collection drum, a coalescing filter and flexible hose, a carbon canister, and a Colorimetric Indicator. The liquid collection drum, a standard 55-gallon closed-head drum, is supplied by the user. A diagram of the system is shown in Figure 1. Katec also supplies an instruction manual on how to operate and maintain the system.

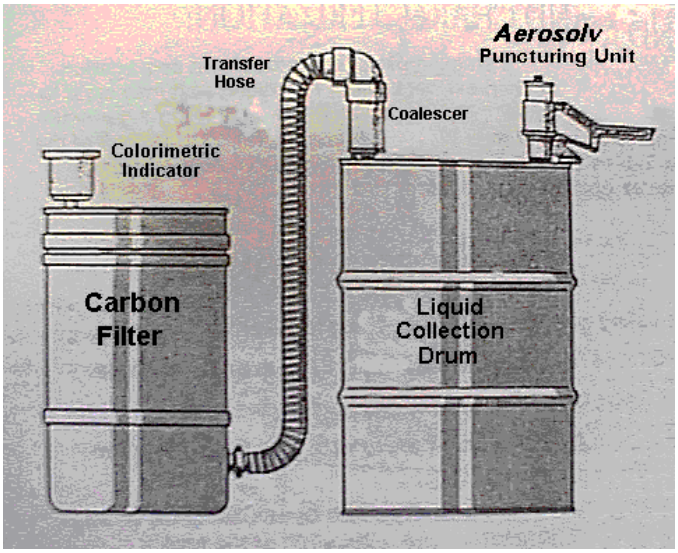

Figure 1. Schematic of Katec Aerosolv® Aerosol Can Recycling System

Aerosolv® Puncturing Unit. The Aerosolv® Puncturing Unit screws into the 2-inch bung hole of a standard 55-gallon drum (i.e., the liquid collection drum). To operate the Aerosolv® Puncturing Unit, the spray nozzle is first removed from an aerosol can, then the can is placed upside down into the top of the unit. The sliding top plate assembly is swung over the can and then depressed to push the can down against a flat silicone gasket inside the unit. After the aerosol can is secured in place, a spring-loaded handle on the unit is pushed down to pierce the dome of the can with a carbide-tipped puncture pin. As the can is emptied, vapors and gases pass from the collection drum through the coalescing filter into the carbon filter. After the contents of the can have been allowed to drain (approximately 30 seconds to two minutes), the can is removed from the unit and managed as scrap metal which may be recycled.

Replaceable seals are provided at two locations to prevent releases of gases and liquids during puncturing: (1) the flat annular shaped gasket composed of silicone is set within the unit to provide a seal around the shoulder of the inserted can, and (2) two Viton O-rings seal the

annulus around the puncture pin, which is replaceable and housed in a Teflon sleeve. A primary function of the two Viton O-rings is to retain grease packing around the puncture pin for smooth operation.

The body, cap and handle of the unit are cast aluminum. A lock knob located on the side of the unit turns a set screw onto the slide bar of the sliding top plate assembly to secure the aerosol can in place. The sliding top plate assembly consists of the cap, slide bar and sealing knob. The sealing knob, located on top of the cap, is turned to press the aerosol can further down into the unit onto the silicone gasket to form a seal, and to push open a spring-loaded check valve at the base of the unit. The check valve has a flat Teflon® seal which when open allows the contents from the punctured can to pass into the collection drum. When the can is removed, the valve is intended to seat against the bottom of the unit preventing or reducing escape of vapors when the unit is not in operation.

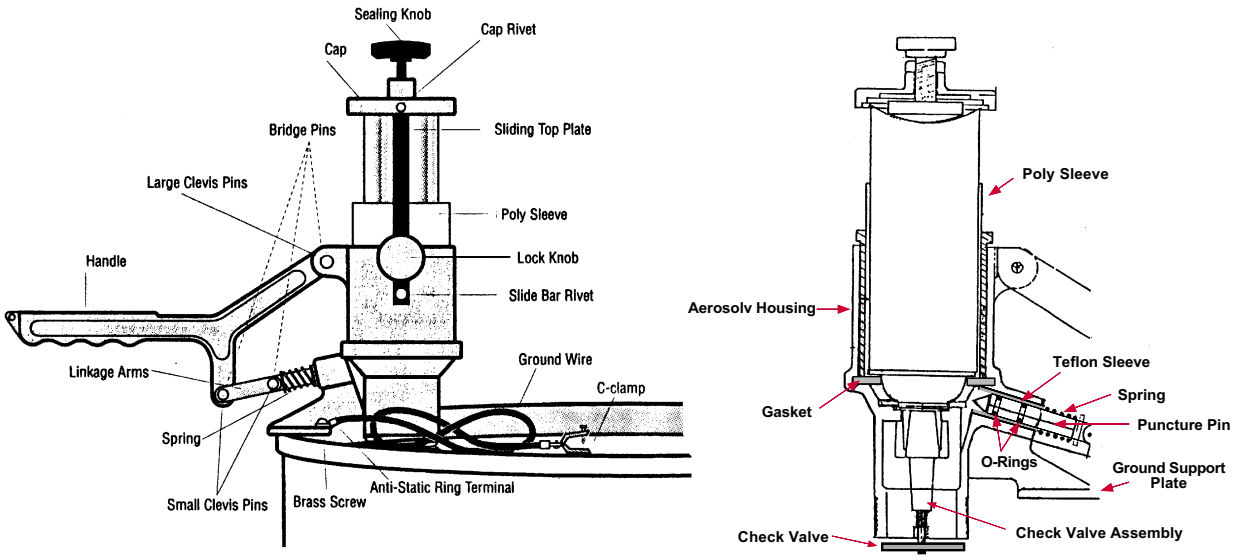

Source: Katec Inc. Aerosolv Instruction Manual

Figure 2. Schematic Diagram of Aerosolv Puncturing Unit

55-gallon closed-head drum. Liquids released from the punctured aerosol can are collected in a standard 55-gallon liquid collection drum. To ensure adequate headspace for discharged gases, the drum is changed when it has reached 70% of capacity (a minimum of 17 gallons or 10 inches of headspace).

Coalescing Filter. The coalescing filter screws into the 3/4-inch bung hole of the liquid collection drum and is connected to the carbon filter inlet with a 2-inch diameter hose. Gases and vapors from the punctured cans pass from the liquid collection drum through the coalescing filter prior to entering the carbon canister. The coalescing filter is intended to coalesce aerosol droplets such that they drain back into the liquid collection drum, and to allow only vapors and gases to pass into the carbon filter.

Carbon Filter. The carbon filter is used to treat gases and vapors that are generated from the puncturing and draining operation. It is constructed from a 30-gallon high-density polyethylene

drum and contains three layers of activated carbon, each approximately eight to ten inches thick. The carbon layers are separated by a total of four 2-inch layers of Dual Denier fiber. According to Katec, a total of 41 pounds of 4-millimeter pelletized activated carbon is used in the filter.

Colorimetric Indicator. The Colorimetric Indicator is intended to monitor the carbon filter and to indicate when the carbon filter needs to be replaced (i.e., when the filter has become saturated). Vapors that escape the carbon must pass through the Colorimetric Indicator before exiting the system. The operator is supposed to check a clear window in the side of the cartridge for a color change. A label next to the window shows adjacent black and bright pink colors which are supposed to represent whether the cartridge is expended or not. Katec refers to the Colorimetric Indicator as a "carbon cartridge." The indicator material consists of hydrated zeolite (clinoptilolite) granules impregnated with 6% by weight of potassium permanganate. The indicator material is manufactured by Cameron Yakima, Inc. and is sold primarily for odor control. Potassium permanganate, purple in color, is an oxidizing agent which generally reacts more readily with organic compounds containing oxygen than with other compounds present in the cans tested. The permanganate reaction product is dull brown in color. Table 1 shows the relative ability of different chemicals to react with the colorimetric indicator material.

According to this table, the indicator should react well with ethers, such as dimethyl ether propellant; with ketones, such as acetone or methyl ethyl ketone; with alcohols, such as isopropanol; and with olefins, such as ethylene. It would react poorly with aromatic compounds such as xylenes; with chlorinated hydrocarbons such as tetrachloroethene or Freon-12; or with aliphatic hydrocarbons such as propane propellant or octane.

TABLE 1

Colorimetric Indicator
Efficiency Rating and Theoretical Capacity of Potassium Permanganate on Zeolite

Chemical Compound	Efficiency Rating	Theoretical Capacity, weight %
Acetaldehyde	high	20
Acetic acid	high	21.5
Acetone	high	18.4
Ammonia	medium	3
amyl acetate	high	12.5
amyl alcohol	high	12
amyl ether	high	13.6
aniline	low	1
Arsine	high	14
benzene	high	0.6
borane	high	3.2
bromine		32
butadiene	medium	3.6
butane	**low**	**0.5**
butanone	high	16.2
butryric acid	high	17.5
butyl acetate	high	17.5
butyl alcohol	high	15.3
butyl ether	high	14.5
butylene	medium	3.2
butyraldehyde	high	16.2
caprilic acid	high	15.7
caprioc acid	high	14.1
carbon dioxide	low	
carbon disulfide	low	1.5
carbon monoxide	medium	10
carbon tetrachloride	**low**	
chlorine		19.3
chloroform	low	5
chloroprene	medium	5
crotonaldehyde	high	12.1
cyclohexane	medium	3.2
cyclohexanol	high	12
cyclohexanone	high	12.5
cyclohexene	high	10
decane	**low**	**3.5**
diethyl ketone	high	12.5
diethylamine	high	5.5
diethylene triamine	high	5
dimethyl sulfoxide	high	12
ethane	low	0.1
ethanolamine	high	8.2
ether	high	15.5
ethyl acetate	high	16.5
ethyl acrylate	high	12.5
ethyl alcohol	high	12
ethyl ether	high	15.5
ethyl formate	high	16.5
ethyl mercaptan	high	16
ethyl silicate	high	6.5
ethylene	medium	3.8
ethylene diamine	high	5.5
ethylene oxide	high	12.4
formaldehyde	high	23.6
formic acid	high	27.5
heptane	**medium**	**3**
heptylene	medium	9

Chemical Compound	Efficiency Rating	Theoretical Capacity, weight %
hexane	**medium**	**3**
hexylene	medium	3.3
hydrogen	high	0.8
hydrogen cyanide	high	8
hydrogen selenide	high	20.2
hydrogen sulfide	high	14.5
indole	medium	3.2
iodoform	high	16.5
isoprene	medium	3
isopropyl alcohol	high	13
isovaleric acid	high	12.6
keronane	medium	8
lactic acid	high	10
mercaptans	high	14
methane	low	0
methyl acetate	high	16.5
methyl acrylate	high	12.7
methyl alcohol	high	12.5
methyl chloride		5
methyl cyclohexane	medium	3.3
methyl cyclohexanone	high	13.5
methyl ether	**high**	**15.6**
methyl ethyl ketone	**high**	**18.4**
methyl isobutyl ketone	high	18.4
nicotine	high	25.5
nitric acid		6.3
nonane	**low**	**3**
octalene	medium	9.2
octane	**low**	**3**
palmitic acid	high	13
pentane	low	2.2
pentanone	high	14.8
pentene	**medium**	**7.6**
pentyne	high	6.7
perchloroethylene	**low**	**0.1**
phenol	high	16.2
phosgene	high	10
propane	low	0.5
propionaldehyde	high	14.1
propionic acid	high	14.7
propyl acetate	high	15.3
propyl alcohol		13.8
propyl ether	high	14.1
propyl mercaptan	high	15.2
propylene	medium	8
putrescine	high	15
pyridine	high	5.3
skatole	medium	4.3
stibine	high	22.4
sulfur dioxide	high	26
trimethyl amine	high	5.3
turpentine	medium	8
uric acid	high	22.5
valeraldehyde	high	13.9
valeric acid	high	14.8
xylene	low	0.6

Notes:
1) Data Source: Cameron Yakima, Inc (colorimetric indicator manufacturer)
2) Chemicals present in tested aerosol can products shown in bold

Section 3.
Field Test Verification Objectives

***Objective 1* - Removal Effectiveness**

- **Removal to 3% of Capacity** *(Objective 1a)***.** For each aerosol can product evaluated, determine the ability of the Aerosolv® System to treat aerosol cans to less than 3.0% of the original can contents or capacity, the federal definition of an empty container. Establish with a 95% confidence level that the mean percentage of the original can contents remaining in the can after treatment is 3.0% or less.

- **Removal Efficiency** *(Objective 1b)*. *Removal efficiency* is the percent of the contents of the untreated waste aerosol cans that is removed from the cans by the Aerosolv® System. For each class of aerosol product to be evaluated, determine the mean removal efficiency at the 95% confidence level.

***Objective 2* - System Capture Efficiency**

- S*ystem capture efficiency is* the percent of the gaseous and liquid contents removed from the untreated aerosol cans that is captured by the Aerosolv® System. For each aerosol can product tested, measure the system capture efficiency to within +/- 1%. Establish with a 90% confidence level whether the mean capture efficiency is 90% or greater.

***Objective 3* - Carbon Filter Effectiveness**

- Determine the total mass of the contents of waste aerosol cans processed by the Aerosolv® System (mass loading) resulting in carbon filter breakthrough emissions up through the carbon filter changeout criteria of 100,000 ppm total hydrocarbon emissions established for the field tests *(Objective 3a)*.

- Measure the total organic vapor concentrations in carbon filter breakthrough emissions to assess their risk to worker health and safety, and to serve as the basis for establishing appropriate criteria for replacement of the carbon filter during operation of the technology, consistent with the 90% system capture efficiency *(Objective 3b)*.

- Assess the adequacy of the established Standard Operating Procedures (SOPs) in determining when the carbon filter is spent and needs replacement *(Objective 3c)*.

***Objective 4* - Assess Worker Health & Safety**

- Determine the capability of the Aerosolv® System to operate such that the concentrations of the vapor/gaseous emissions within the operator's breathing zone do not exceed the Cal OSHA- or federal-OSHA Permissible Exposure Limits (PELs), STEL, IDLH and Ceiling Limits or the allowable daily exposure, D, for constituents of concern present in each class of aerosol can to be evaluated for certification. Where PELs are unavailable for certain constituents, recommended Time-Weighted Averages (TWAs) established by NIOSH or ACGIH would be applied. ALARA (as low as reasonably achievable) concentration limits would apply if a PEL or TWA is unavailable for a constituent *(Objective 4a)*.

- Determine the capability of the Aerosolv® System to operate such that the concentrations of the vapor/gaseous emissions within the operator's breathing zone do not exceed other regulatory limits including the STEL, IDLH and Ceiling Limits, established by Cal OSHA, federal OSHA, or NIOSH for worker exposure *(Objective 4b)*.

- Determine the potential for emissions from operation of the Aerosolv® System to exceed 10% of the LEL *(Objective 4c)*.

- Determine the effectiveness of the technology in preventing releases of the liquid contents of the aerosol cans *(Objective 4d)*.

Section 4.
Verification Activities and Results

The Katec, Inc. Aerosolv® System was evaluated in accordance with the Technology Evaluation Field Test Plan, dated July 28, 1998. DTSC staff developed the Field Test Plan in coordination with Katec, Inc. and the Navy. Additionally EPA Environmental Technology Verification (ETV) Program staff reviewed and approved the draft Field Test Plan before it was finalized. Appendix B, the Field Test Plan, is not included in this report, but is available upon request from DTSC.

The Navy conducted the field tests during the period from August 3 through November 29, 1998 at the U.S. Navy Public Works Center facility in San Diego, California. Except for the wind speed monitoring and analysis of liquid collection drums samples, the Navy was responsible for implementing all aspects of the Field Test Plan. DTSC staff were present on site as an independent evaluator to observe important aspects of the field testing procedures, but were not present during all of the field testing activities. Deviations noted from the approved Field Test Plan are discussed in the sections below.

4.1 Aerosol Can Products Tested

Katec and the Navy requested that the performance of the Aerosolv® System be evaluated for three categories of aerosol can products: paints; hydrocarbon cleaners and lubricants; and chlorinated solvent cleaners. Table 2 gives the products and corresponding constituents which were specified for testing in the approved Field Test Plan.

Table 2: Aerosol Can Products Specified for Testing in Field Test Plan

Run #	Product Name (Manufacturer)	Aerosol Can Product Class	Constituents *product :*	Constituents *propellant:*
1, 2 & 3	Eco Sure and So Sure paints (LHB); containing only the constituents shown in the right hand column	Paints	xylene methyl isoamyl ketone methyl isobutyl ketone methyl propyl ketone n-butanol Aromatic 100 Aromatic 150 1,2,4 trimethyl benzene	dimethyl ether
4 & 5	So Sure (LHB) Corrosion Preventative Compound	Non-halogenated Hydrocarbon Cleaners & Lubricants	aliphatic mineral spirits (naptha)-38% barium sulfate <1% trichlorotrifluoroethane-37%	chlorodifluoromethane-16.4%
6 & 7	Brakleen (CRC Industries)	Chlorinated Solvent Cleaners	tetrachloroethene Stoddard solvent	carbon dioxide

Table 3 lists typical constituents found in the three types of products and their corresponding properties, based on MSDS's for aerosol can products found at the Navy hazardous waste storage facility.

TABLE 3
Typical Constituents of Interest For Classes of Aerosol Cans Being Evaluated

AEROSOL CAN CLASS	CONSTITUENT OF INTEREST	OSHA PEL	Cal OSHA PEL	NIOSH TWA	CEILING	STEL	IDLH	LEL	Ionization Potential	Relative Response Factor
		ppm ("*" indicates mg/m3)							(meV)	FID
PAINTS	propane	1000		1000			2100	21000	11.07	1.43
	butane		800	800				16000	10.63	1.81
	isobutane		800	800				16000	10.57	1.85
	dimethyl ether							34000		
	dichloromethane	500	25	ALARA	1000		2300	130000	11.35	0.78
	toluene	200	25	100	300	150	500	11000	8.82	2.97
	xylenes	100	100	100		150	900	11000	8.56	2.93
	methyl ethyl ketone	200	200	200		300	3000	14000	9.53	1.89
	2-butoxyethanol	50	25	5			700	11000	10	
	methyl isobutyl ketone	100	50	50		75	500	12000	9.3	1.84
	methyl isoamyl ketone		50						9.28	
	methyl propyl ketone	200	200	150			1500	15000	9.53	
	1,2,4-trimethylbenzene		25	25				9000	8.27	
	N-butanol	100	50		50		1400	14000	10.04	1.2
	N-Butyl Acetate	150	150	150		200	1700	17000	10	1.56
	VM&P Naphtha		300	350 *	1800 *			12000		
	Aromatic 150									
	Aromatic 100									
	Light Aromatic Naphtha		100							
	Petroleum Distillates (Naphtha)	500	100	350 *	1800 *		1100	11000		
	Stoddard Solvent	500	100	350 *	1800 *		20000 *			
NON-HALOGENATED lubricants & cleaners	Liquefied Petroleum Gas	1000		1000			2000	20000		
	Stoddard Solvent	500	100	350 *	1800 *		20000 *			
	Kerosene			100 *				7000		
	Naptha									
	2-butoxyethanol		25						10	
	4-hydroxy-4-methyl-2-pentanone	50					1800	18000		
	2-Butanol	150	100	100		150	2000	17000	10.1	1.2
	solvesso		5							
	aromatic petroleum distillate									
	aliphatic petroleum distillate									
	propane	1000		1000			2100	21000	11.07	1.43
	isobutane		800	800				16000	10.57	1.85
HALOGENATED solvent cleaners	propane	1000		1000			2100	21000	11.07	1.43
	butane		800	800				16000	10.63	1.81
	isobutane		800	800				16000	10.57	1.85
	Stoddard Solvent	500	100	350 *	1800 *		20000 *			
	tetrachloroethene	100	50	ALARA	200		150		9.32	1.06
	trichloroethene	100	25	ALARA	200		1000	80000	9.45	0.94
	Freon-113	1000	1000	1000		1250	2000		11.99	1.38
	Freon-11	1000	1000	1000			2000		11.77	
	Freon-12	1000	1000	1000			15000		11.75	0.21

The selection of specific products to be used for the field tests was based on the availability of a sufficient quantity of the waste aerosol cans at the Navy storage facility, and the desire to test the performance and safety of the technology on products with a range of physical and chemical properties. Additionally, the selection of specific products within each product category was based on the need to gather data on emissions, carbon capacity, and the effectiveness of the Colorimetric Indicator.

The aerosol can products which were actually used for the field tests are discussed below. Based on analysis of the liquid collection drum samples (Section 4.4) these products contained constituents besides those specified in the approved Field Test Plan.

4.1.1 Paints

The paints tested contained a mixture of aromatic and aliphatic hydrocarbons such as toluene, xylenes, and naphtha; low and medium boiling point ketones such as acetone and methyl ethyl ketone; paint solids; and occasionally dichloromethane. Some of the paints included dimethyl ether propellant, while others included propane/butane/isobutane propellant. The dimethyl ether propellant and the ketones were intended to provide a positive test for the colorimetric indicator, where a color change would be most likely to occur (see Table 1). Due to the wide variety of colors and dates of manufacture of paints selected by the Navy, it was not possible to predetermine with certainty all ingredients that might have been in the paints. Two lines of paint, manufactured by LHB Industries, St. Louis, MO, were chosen for testing: Eco Sure and So Sure.

Eco Sure paints are a line of low VOC, high solids enamel and primer paints. The paints are available in a wide variety of colors. According to LHB and a review of several MSDS's, the ingredients in Eco Sure paints have varied over time and between colors. During the field test, the Navy used a variety of colors and ages of Eco Sure paints. MSDS information for each type of paint used was unavailable. Older Eco Sure paints used a propane/butane/isobutane mixture as a propellant, while newer Eco Sure paints use dimethyl ether as a propellant due to its properties as solvent as well as a propellant.

So Sure paints are standard lacquer and enamel paints. As with Eco Sure paints, LHB has varied the ingredients in their So Sure paints over time and the Navy used a variety of colors and ages of paints during the field test. Many So Sure paints contain a propane/butane/isobutane mixture as a propellant, while some may contain dimethyl ether as a propellant, usually along with propane.

4.1.2 Hydrocarbon Cleaners and Lubricants

A Corrosion Preventative Compound (CPC) manufactured by LHB Industries was chosen to represent the hydrocarbon cleaners and lubricants. The CPC selected was intended to contain solvents and propellant which were not expected (based on the information in Table 1) to react with the Colorimetric Indicator. Both the solvents and propellant were expected to adsorb well on carbon. Although the Field Test Plan specified use of a single type of CPC, the Navy used four types of CPC's to obtain a sufficient number of cans for testing. Although these CPC's contained different ingredients than what was specified in Table 3, this change did not have a

significant impact on results obtained from the field tests or the conclusions reached regarding technology performance.

4.1.3 Chlorinated Hydrocarbon Solvent Cleaners

A chlorinated hydrocarbon solvent cleaner, Brakleen, manufactured by CRC Chemicals, Warminster, PA, was chosen for the field test. Brakleen was selected to contain high-boiling solvents which were expected to adsorb very well on carbon, but not to react with the Colorimetric Indicator. The product was also chosen to contain carbon dioxide propellant which does not adsorb on carbon, does not react with the Colorimetric Indicator material, and is not detected by the Flame Ionization Detector used for monitoring total hydrocarbon emissions.

Brakleen contains primarily tetrachloroethene along with some Stoddard solvent and carbon dioxide propellant. While not present on the MSDS's provided by the Navy, trichloroethene was also found in collected liquids from treatment of the Brakleen aerosol cans. Although not detected, the Brakleen was also suspected to contain small amounts (<2%) of oxygenated stabilizers and inhibitors such as 1,4-dioxane or 1,3-dioxolane.

4.2 Field Test Operations.

A series of seven (7) test runs were conducted to evaluate the Katec Aerosolv® System for treating the three types of aerosol can products. While the Field Test Plan specified that three paint test runs would be carried out on a mixture of Eco Sure and So Sure paints to provide three replicate data sets, the Navy decided to carry out two of the paint test runs on Eco Sure paints and one on So Sure paint. This deviation from the Field Test Plan affected the results and conclusions for removal effectiveness, and is discussed further under Section 4.5.

Prior to conducting these test runs the Aerosolv® System was operated during period of August 3-4, 1998 to familiarize Navy staff with field test setup and procedures, and to provide a short break-in period for the new equipment to be used. About two dozen mostly full aerosol cans were treated during this period. During the pre-test period the two Total Vapor Analyzers (TVA) were set up and calibrated to monitor hydrocarbon emissions using a Flame Ionization Detector (FID): (1) immediately downwind from the Aerosolv® Puncturing Unit, and (2) between the carbon filter exhaust port and the colorimetric indicator. The TVAs were calibrated using methane as a calibrant gas. These same procedures were used during the field test runs. Figures 3 and 4 show the relative setup of the monitoring equipment used during the field test.

Two Total Vapor Analyzers (TVAs) operating in the Flame Ionization Mode were used during each of the seven field test runs while aerosol cans were being punctured and drained. The TVA's were used to measure and record total hydrocarbon emission concentrations at a fixed location near the puncturing unit and at the carbon filter exhaust port. The TVA monitoring at the Aerosolv® Puncturing Unit was placed immediately downwind and at an elevation no more than 6 inches above the elevation of the puncturing unit. The data recorders for the TVA monitors recorded concentration levels at frequencies ranging from 1 to 5 seconds. During some test runs the TVA was used only intermittently to measure carbon filter emissions.

A 500 lb. capacity drum scale with a readability of 0.1 lb (Digi Matex Inc. Model S-NL with Ohaus I-10 readout) was calibrated at a local scale company and delivered to the field test site

during the pre-test period. Calibration weights used were accurate to 0.1 lb. An additional set of secondary calibration weights were made up on-site from a series of barbell weights and used for checking calibration before each set of measurements. To establish that this scale maintained its calibration throughout out the field tests the scale company performed an on-site calibration at the end of the field tests. The drum scale was used to weigh the Aerosolv® System in two parts at the beginning and end of each test run: (1) the Aerosolv® Puncturing Unit, liquid collection drum and coalescing filter, and (2) the carbon filter, colorimetric indicator and connecting hose. These components were sometimes also measured at the beginning or end of a day's operation as an additional check and to assess whether any weight changes occurred between operating periods. Additionally the Field Test Plan called for the drum scale to be used to weigh groups of waste aerosol cans in bulk receptacles before and after treatment as a check on the individual can weights. The bulk receptacles data, however, could not be used because these measurements were either not taken consistently or not clearly recorded.

A Mettler PM 2000 laboratory scale with a 500 gram capacity and a resolution of 0.01 grams was provided by the Navy to weigh each aerosol can treated during the seven test runs before and after treatment, and for measuring the tare weights of selected treated cans from each of the three product categories tested. A set of class "S" weights were used to calibrate the scale prior to each set of weight measurements. All waste aerosol cans used for the seven test runs were weighed both before and after being punctured and drained. Although the Field Test Plan called for recording the time of all weight measurements the Navy generally did not record the times in their data log. The Field Test Plan also called for weighing of the aerosol cans immediately after treatment. Generally this was not done during Test Runs #1 and #2. Treated cans during these test runs were placed in bulk receptacles for weighing at a later time, sometimes days or weeks.

A Campbell Scientific data logger and Met-One wind speed sensor with a 1 mph threshold was set to continuously monitor windspeed during each of the test runs while aerosol cans were being punctured and drained. The windspeed indicator was fixed at a location immediately above the liquid collection drum and about 12 inches above the top elevation of the Aerosolv® Puncturing Unit. The data logger continuously recorded 15-minute average windspeeds for the duration of each of the field test runs.

Navy Industrial Hygiene staff collected breathing zone samples to evaluate worker exposure during operation of the Aerosolv® System. For the three product types, both long and short term exposure samples were collected and analyzed using OSHA Methods 07 and 48 for the set of target constituents expected to be contained in the specific product being tested.

The Navy also collected area samples for analysis of specific target analytes using OSHA Methods 07 and 48. This effort was outside the scope of the Field Test Plan. DTSC did not review or approve a protocol for this purpose. These area samples were collected from the area downwind of the puncturing unit (co-located with the fixed TVA monitor), from the liquid collection drum headspace, from the carbon exhaust port both before and after the saturation indicator, and from the inlet port of a spent carbon bed. Details on all specific activities conducted by the Navy Industrial Hygiene staff during the field test and their corresponding results are presented in the January 28, 1999 report, "Aerosolv® Aerosol Can Recycling Technology, Field Test Demonstration, Summary of Results, August 5, 1998 - November 29,

1998, Navy Public Works Center Environmental Department, San Diego". The results of the Navy Industrial Hygiene sampling efforts are discussed in Section 4.8.

Figures 3 and 4, photographs taken of the Katec's Aerosolv® System during the field test, show the individual system components. Also shown in these figures are the locations of the monitoring instruments used during the field tests relative to these components.

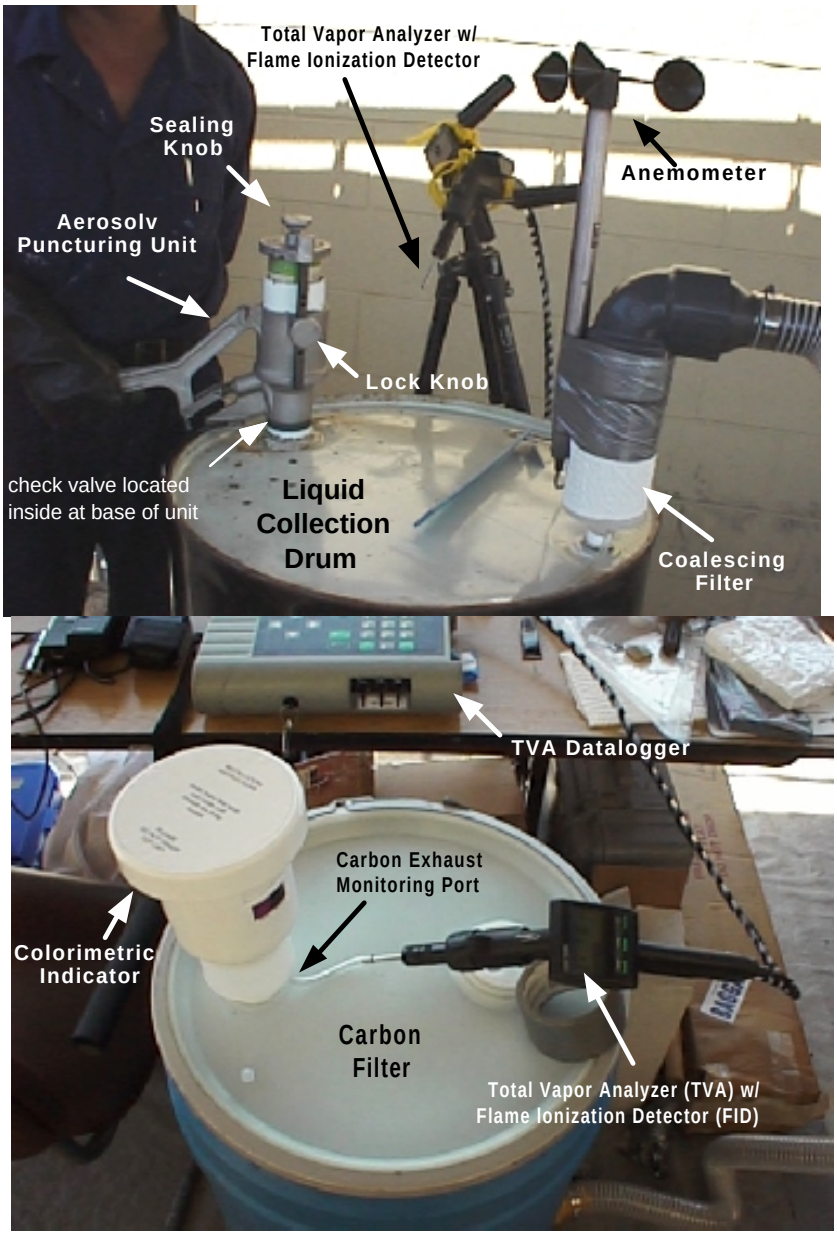

Figure 4. Carbon Filter with Colorimetric Indicator Shown with Monitoring Equipment During Field Test

During each of the three sets of test runs composite liquid samples were collected from the liquid collection drum for GC/MS analysis by EPA Method 8260. These sample results were intended as a check on whether the aerosol can products used in the field test runs contained only the ingredients shown in Table 3. These analyses were also intended as a check that additional constituents were not present in significant quantities which should have been included in the industrial hygiene sample analyses.

4.3 Field Test Runs Conducted

A breakdown of the aerosol can products treated by the Katec Aerosolv® Aerosol Can Puncturing & Draining Technology during the seven field test runs is given in Table 4, below.

Table 4
Summary of Aerosol Can Products Treated in Field Test Runs

Aerosol Can Product	Test Run	# Cans Treated	Pre-Treatment Weight (grams)		Estimated(1) Percent Fullness	
			Mean	Std. Dev.	Mean	Std. Dev.
Eco-Sure Paints -misc.	1	350	194.58	81.33	26%	25%
So-Sure Paints - misc.	2	1023	142.56	33.30	11%	10%
Eco-Sure Paints -misc.	3	317	199.19	75.88	33%	25%
Corrosion Preventative Compound	4	250	275.62	134.47	42%	33%
Corrosion Preventative Compound	5	100	458.58	99.31	87%	24%
Brakleen	6	182	229.08	212.04	22%	39%
Brakleen	7	48	650.44	6.12	100%	1%
Totals:		**2270**				

(1) Based on the mean of manufacturer's net content weights for aerosol cans used for the tare weight measurements.

During the seven test runs a total of 2270 waste aerosol cans were punctured and drained using the Aerosolv® System. This included 1690 paint aerosol cans, 350 Corrosion preventative Compound aerosol cans and 230 Brakleen aerosol cans. Although the Field Test Plan specified limiting the testing to cans no fuller than 25% of the original net content weight, the above data indicate that this limit was exceeded on the average in 5 of the 7 test runs.

During development of the Field Test Plan, Katec requested that testing be limited to aerosol cans that are less than 25% full. This request was partly due to a concern that full or greater than half-full aerosol cans represent a higher risk for leaks/releases of the liquid or gaseous contents during treatment. Katec also has stated that the fuller waste aerosol cans are not representative of near-empty cans that would be treated by the typical Aerosolv® System user. When the field tests began, however, Katec and the Navy realized that testing could be completed in a much shorter time if fuller cans were used in the field tests. Testing of fuller cans would require fewer cans be treated per test run to collect the 44 pounds required to determine the capture efficiency (see section 4.6). DTSC agreed to the proposed change since it was beneficial to test cans with a greater range of fullness and it would not adversely affect quality of the field test data obtained or the evaluation results.

4.4 Liquid Collection Drum Sample Analyses

The chemicals that were expected to be present in the tested products based on MSDS's provided by the Navy were identified in the Field Test Plan and are shown in Table 2. The choice of aerosol can products to test was based, in part, on the Navy's worker exposure air sampling plan, and the limited list of compounds that the Navy's Industrial Hygiene Laboratory could analyze using OSHA Method 7 (GC/FID). If other chemicals of potential health and safety interest were present but not among those included in the analyses, under-reporting of potential exposures could result. To confirm that the aerosol can products supplied by the Navy for testing contained only the constituents agreed upon in the Field Test Plan, composite liquid samples were collected from the liquid collection drums for each product type.

For the paint products, one composite liquid sample was collected at the conclusion of Test Run #1 and one sample after the conclusion of Test Run #3. For the CPC and the Brakleen, one sample was collected following the completion of the two test runs on each product type. Samples were collected using a composite liquid waste sampler (COLIWASA), and placed into 40-milliliter VOA vials. Split samples were provided to the DTSC Hazardous Materials Laboratory (HML) and the Navy for analysis. HML analyzed all four samples, while the Navy had only the first paint sample along with the CPC and Brakleen samples analyzed. Each laboratory used EPA SW-846 Method 8260 to perform a screening level analysis. Due to the highly concentrated nature of the liquids, sample dilution was necessary prior to analysis, resulting in relatively high detection limits. Results of these analyses are shown in Table 5.

Constituents found in the paint collection drum liquids which were <u>not</u> included in the Navy's workplace and carbon exhaust air monitoring include dichloromethane (3200 mg/kg), 4-methyl-2-pentanone (13000 - 17000 mg/kg), and tetrachloroethene (140 mg/kg). Dichloromethane was not detected in the liquids collected during Test Run #1, but was detected in the composite sample of liquids collected for Test Runs #1, #2 and #3. Therefore Dichloromethane was present in the paint products treated during Test Run #2 or #3. MSDSs of LHB Eco Sure or So Sure paints of the general types selected by the Navy for the field test show that some older products may have contained up to 45% dichloromethane (e.g., So Sure Red Lacquer 11136). A LHB representative confirmed that, while such products are no longer formulated with dichloromethane, older cans did include this chemical in the formulation. Similarly, dichloromethane was found in CPC liquids and 1,1,1-trichloroethane was found in Brakleen but not included as air monitoring analytes.

Table 5

ANALYTICAL RESULTS OF SAMPLES COLLECTED FROM LIQUID COLLECTION DRUM LIQUIDS, EPA METHOD 8260

		HML ANALYSES				U.S. NAVY ANALYSES		
PRODUCT TYPE:		PAINTS	PAINTS	CPCs	BRAKLEEN	PAINTS	CPCs	BRAKLEEN
TEST RUNS:		#1	#1-3	#4-5	#6-7	#1	#4-5	#6-7
	AIR SAMPLING ANALYTE	Concentration						
CONSTITUENT		mg/kg	mg/kg	mg/kg	mg/kg	mg/kg	mg/kg	mg/kg
Acetone	Yes	2600						
Carbon Tetrachloride	No	130						
cis-1,2-Dichloroethene	No	60						
Dichloromethane	No		3200	3500			700	
Ethylbenzene	Yes	36000	21000	310		40000	160	
Freon-11	No			29000			1230	
Freon-12	Yes			7300			10500	
Isopropylbenzene	No	1700	1300					
p-Isopropyltoluene	No	40						
4-methyl-2-pentanone	yes	13000	17000					
Naphthalene	No	850	610	2900			670	
N-Propylbenzene	No	2400	1700					
Tetrachloroethene	No/Yes	140		120	580000		60	38100
Toluene	Yes	61000	110000	11000		80000	7900	
1,1,1-trichloroethane	No	1200					610	
Trichloroethene	No				650		90	200
1,2,4-trimethylbenzene	Yes	11000	3500	410			230	
1,3,5-trimethylbenzene	Yes	5600	2100	110			50	
m & p-Xylenes	Yes	99000	54000	960				
o-Xylene	Yes	28000	17000	270				
Xylenes	Yes					150000	650	
TENTATIVELY IDENTIFIED CONSTITUENTS								
Alicyclic HCs	Yes	identified	identified	identified				
C5-C11 Aliphatic HCs	Yes	identified						
C6-C11 Aliphatic HCs	Yes			identified				
C7-C13 Aliphatic HCs	Yes		identified					
Alkyl Benzenes	No	identified	identified					
Freon-112	No			identified				
Freon-113	Yes			identified			identified	
Indan	No		identified					
Methyl indan	No		identified					

notes:

Blanks indicate that compound was not detected; detection limits (DL) for these analyses are given below.

HML Analyses:

- paints, test run #1, DL = 3900 mg/kg for ketones, otherwise 390 mg/kg
- paints, test runs #1-3, DL = 3000 mg/kg for ketones; 1600 mg/kg for chlorinated hydrocarbons; otherwise 300 mg/kg
- CPCs, DL = 3500 mg/kg for ketones & chlorinated hydrocarbons; otherwise 390 mg/kg
- Brakleen, DL = 1600 mg/kg

Navy Analyses:

- paints, test run #1, DL = 5,000-10,000 mg/kg for hydrocarbons & chlorinated solvents; 50,000-100,000 mg/kg for ketones & ethers
- CPC, DL = 25-250 mg/kg; Brakleen, DL = 50-500 mg/kg

4.5 Results: Objective 1, Removal Effectiveness

The field tests evaluated the capability of the Aerosolv® System to treat aerosol cans to less than 3.0% of the original can contents, the federal definition of an empty container. Also evaluated was the removal efficiency of the system, or the fraction of the untreated can contents that is removed by the technology.

The 3% criterion was evaluated using a subset of all the cans tested. For each product category 75 cans were randomly selected from the inventory of treated aerosol cans. The Field Test Plan allowed for these cans to be selected from one or more of the test runs specified for each product

category. For paints, cans were randomly selected from all three test runs. For CPCs, cans were randomly selected from both test runs. For Brakleen, cans were randomly selected only from one of the test runs, Test Run # 6. Excluding Test Run # 7 appears appropriate since Test Run # 6 included cans of varied fullness, while only full, unused Brakleen cans were treated during Test Run # 7. However, a review of the data indicated that the cans selected from Test Run # 6, averaged only 2% full, which meant that the aerosol cans were below the 3% criterion prior to treatment. Although this deviation from the Field Test Plan presents some concern, the tare weight and post treatment weight data could be used to determine the removal effectiveness for the Brakleen cans treated in Test Runs # 6 and # 7 . This result is presented below in the discussion under Objective 1a for the chlorinated solvent category.

The selected cans were cleaned to remove any remaining residuals after treatment, then dried and weighed to determine their tare weights. Removal effectiveness was calculated for each can based on its weight before and after treatment and its tare weight. The Field Test Plan deferred to the Navy to develop the procedure determining the tare weight. The developed procedure involved cutting the tops of the aerosol cans off with a kitchen-type can opener and then cleaning the cans with naptha solvent using a commercial parts-cleaner supplied by Safety-Kleen. This procedure worked adequately for cleaning the CPC and Brakleen aerosol cans. For paint aerosol cans, however, use of a paint remover product was necessary and the procedure was modified accordingly. DTSC staff checked the cans following cleaning to ensure that they were adequately cleaned for the tare weight determinations. Because of discrepancies in the recorded pre- and post-treatment weights, several of the selected cans had to be excluded from the analysis.

The approved Field Test Plan specified weighing aerosol cans immediately after treatment. Treated aerosol cans not immediately weighed after treatment may have lost a fraction of their weight due to volatiles loss during storage. Such weight losses would bias the removal effectiveness result. Because the Navy did not record the times when all of the treated aerosol cans were weighed it is not possible to assess the magnitude of this bias. This is an issue only with Test Runs #1 and #2, when treated aerosol cans were not weighed immediately after treatment. For Test Runs #3 through # 7 treated aerosol cans were generally weighed at the end of the day's operation or earlier. For Test Runs #1 and #2 the results would be biased low for Objective 1a (removal to 3% capacity), and biased high for Objective 1b (removal efficiency). No corrections in the results have been made to account for this potential bias.

Table 6

Summary of Residual Fraction and Removal Efficiency Results

Test Runs	sample number (n)	% Fullness		Tare Weight (g)		Residual Fraction[3]			Removal Efficiency		
		Mean	Std. Dev.	Mean	Std. Dev.	Mean	Std. Dev.	UCL[4]	Mean	Std. Dev.	LCL[4]
Paints											
Paints, Test Run # 1	19	21.8%	21.0%	110.14	3.16	2.68%	1.85%	**3.41%**	82.2%	12.6%	**77.2%**
Paints, Test Run # 2	41	9.1%	10.5%	106.65	4.31	0.83%	0.63%	**0.99%**	86.9%	11.3%	**81.6%**
Paints, Test Run # 3	13	19.1%	8.7%	106.65	3.08	1.87%	0.76%	**2.25%**	88.0%	8.7%	**83.7%**
Test Runs #1, #2 & #3	73	14.2%	14.8%	107.99	4.11	1.50%	1.35%	**1.76%**	85.9%	11.3%	**83.7%**
Hydrocarbon Lubricant[1]											
Test Runs # 4 & # 5	74	55.6%	35.5%	103.89	2.49	0.76%	0.40%	**0.84%**	98.0%	1.4%	**97.8%**
Chlorinated Solvent[2]											
Test Runs # 6	75	2.0%	1.9%	111.46	0.83	0.53%	0.13%	**0.55%**	64.7%	15.2%	**61.8%**

Notes:
1. Mixture of hydrocarbons ("Corrosion Preventative Compound")
2. Perchloroethylene ("Brakleen")
3. Fraction of the original (nominal) can contents remaining after treatment
4. The Upper and Lower 95% Confidence Limits (UCL and LCL)

The data and results for Objective 1 are summarized in Table 6, and discussed below.

Objective 1a - Removal to 3% Capacity

The upper 95% confidence limit of the mean fraction (percentage) of the original contents remaining in the treated cans was determined for each product category. The objective was considered met if the upper 95% confidence limit of the mean was less than 3%, the federal definition of an empty container.

Paint Product Category. Based on the set of 73 randomly selected cans, 5 of 19 cans from Test Run #1, and 1 of 13 cans from Test Run #3 had greater than 3% of the original can contents remaining after treatment. All 41 cans from Test Run #2 contained less than 3% after treatment.

The mean and standard deviation for the fraction remaining in the aerosol cans after treatment were determined for each paint test run. The upper 95% confidence limit of the means were calculated to be 3.41%, 0.99%, and 2.25% in Test Runs #1, #2, and #3, respectively. Thus, in one of the three paint test runs the Aerosolv® System did not meet Objective 1a. For Test Run #1 the confidence was only 77% that the mean was 3% or less (i.e., the upper 77% confidence limit of the mean was 3%). The varied removal effectiveness may be due to the differences in the paint products treated in the three test runs. Test Runs #1 and #3 involved the treatment of Eco Sure brand paints which include high solids paints, while Test Run #2 involved treatment of So Sure brand paints with lower solids content. Additionally, the waste aerosol cans treated during Test Runs #1 and #3 averaged 21.8% full and 19.1% full, respectively, which were significantly fuller than the average 9.1% fullness of cans treated during Test Run #2.

The Field Test Plan specified three replicate test runs. As discussed above, the aerosol cans treated during the three test runs differed in terms of the products tested and the average fullness.

Therefore, it is not appropriate to combine the results from all three test runs. Since the aerosol cans treated in Test Runs #1 and #3 appear similar it may be appropriate to combine these results. The upper 95% confidence limit of the mean for Test Runs #1 and #3 combined is 2.81%.

Hydrocarbon Lubricant & Cleaners Category. Field test results show that the Aerosolv® System removed residuals in CPC aerosol cans to an average of 0.84% of their original contents (upper 95% confidence limit), well below 3%, the federal definition of an empty container.

Chlorinated Solvent Category. The Field Test Plan required that all cans selected for this determination contain significantly greater than the 3% criterion or federal definition of an empty container. Field test data indicate that the Brakleen aerosol cans selected by the Navy from Test Run # 6 for determining removal effectiveness contained an average of less than 2% of their original net contents. This data alone could not support a conclusion regarding removal effectiveness. However, the tare weight data in conjunction with post treatment weight data for cans treated in Test Runs # 6 and # 7 could be used to conclude that Objective 1a was achieved. This was possible because all the cans treated in the two test runs were the exact same product, and consequently there was relatively small deviation in the measured tare weight for these cans (i.e., the standard deviation was only 0.83 grams for the 75 cans measured). There were 110 cans, approximately half of the cans used for the two test runs, that were greater than 3% full. The average fullness of these cans was about 74%. Using the mean tare weight of 111.46 grams, the percent of original contents remaining in these treated cans averaged less than a percent (0.72%), with a standard deviation of about a third of a percent (0.35%). The maximum percent remaining determined for any of these cans was 1.93%. Based these results, the Aerosolv® System effectively removed or emptied the residuals from Brakleen aerosol cans to below the 3% criterion.

<u>Objective 1b - Removal Efficiency</u>

Removal efficiency, the percent of the waste aerosol can contents that the Aerosolv System removed, was evaluated for each product category. The 95% lower confidence limit of the mean removal efficiency for each product category was determined based on the results for the groups of randomly selected treated cans from each test run.

Paints Aerosol Can Products. The lower 95% confidence limit of the mean removal efficiency determined for paint test runs was 77.2% in Test Run #1, 81.6% in Test Run #2, and 83.7% in Test Run #3.

Hydrocarbon Lubricant & Cleaners Category. The lower 95% confidence limit of the mean removal efficiency determined for the two CPC test runs was 97.8% .

Chlorinated Solvent Category. The lower 95% confidence limit of the mean removal efficiency determined for one of two Brakleen test runs was 61.8%. This relatively low result is due to the near-empty waste aerosol cans selected from Test Run # 6 for this analysis. The calculated removal efficiency becomes proportionately less when the denominator (can fullness) is reduced, as is the case with near-empty cans.

4.6 Results: Objective 2, System Capture Efficiency

System capture efficiency, the percent of the contents removed from the cans that the Aerosolv System captures either as liquids or adsorbed on the carbon filter, was determined for each product type. Using the weights of the aerosol cans before and after treatment and weights of the liquid collection drum and carbon filter assemblies, capture efficiency was measured to within +/- 1% for each test run conducted. The lower 90% confidence limit of the mean capture efficiency was determined for each set of test runs. Table 7, below, summarizes the results obtained during the seven test runs for determining capture efficiency.

Table 7

Katec Aerosolv Technology Field Tests - System Capture Efficency Results

Product Category	Test Run	# Cans Treated	Mass Removed (lbs.)[3]	Mass Captured (lbs.)[4]	System Capture Efficiency				
					Test Run	Category Mean	Std. Dev.	t_{crit}[2]	LCL[1]
Paint	**1**	350	57.61	51.0	88.5%				
	2	1023	75.96	63.8	84.0%				
	3	317	55.94	53.1	94.9%	**89.1%**	5.5%	1.89	**83.2%**
Hydrocarbon Lubricant	**4**	250	93.16	90.3	96.9%				
	5	100	77.45	75.1	97.0%	**96.9%**	0.1%	3.08	**96.8%**
Chlorinated Solvent	**6**	182	45.88	44.5	97.0%				
	7	48	56.39	55.9	99.0%	**98.0%**	1.5%	3.08	**94.9%**
	Totals:	**2270**	**462.38**	**433.6**					

Notes:

1. LCL is the Lower 90% Confidence Limit of the mean
2. $t_{critical}$ used to determine the LCL is the t-value (Students t-distribution) for an alpha = 0.1 and n-1 degrees of freedom
3. The mass removed is based on data obtained from a laboratory balance with an accuracy and precision of +/- 0.01 gm
4. The mass captured is based on data obtained with a drum scale having an accuracy and precision of +/- 0.1 lb.

All seven test runs were used to determine the capture efficiency of the Aerosolv® System for treating the three types of products. Replicate test runs were necessary to evaluate variance in system capture efficiency. Due to the higher variability expected in paint products, three runs were conducted to calculate the capture efficiency for the paints while only two test runs each were conducted for the other two products tested. To determine capture efficiency the Field Test Plan specified that the treatment system must collect or capture a minimum of 44 lbs. for each test run. This requirement was due to the resolution of drum scale and the desired accuracy of +/- 1% for the capture efficiency calculation.

Paint Products Category. The capture efficiencies measured for paints in Test Runs #1, #2 and #3 were 88.5%, 84.0% and 94.9%, respectively. The mean of the capture efficiencies measured for the three paint test runs was 89.1% with a standard deviation of 5.5% and a lower 90% confidence limit of 83.2%.

Hydrocarbon Lubricant & Cleaners Category. The capture efficiencies measured for CPC products in Test Runs #4 and #5 were 96.9% and 97.0%. The mean capture efficiency for the two CPC test runs was 96.9% with a standard deviation of 0.1% and a lower 90% confidence limit of 96.8%.

Chlorinated Solvent Category. The capture efficiencies measured for Brakleen in Test Runs #6 and #7 were 97.0% and 99.0%. The mean capture efficiency for the two Brakleen test runs was 98.0% with a standard deviation of 1.5% and a the lower 90% confidence limit of 94.9%.

4.7 Results: Objective 3, Carbon Filter Effectiveness

The Field Test Plan specified changeout of the carbon filter (i.e., replacement) when the total hydrocarbon concentration in the exhaust reached 10% of the inlet concentration, or when concentration levels specified in the field test Health & Safety Plan for protection of worker health and safety were exceeded. When the changeout criterion was reached, the carbon was considered to be saturated and to have reached its useful capacity.

For test runs involving paints and CPC's the carbon filter inlet concentrations were expected to approach 100% as propellants and vapor displace the air initially present in the system. For these test runs the carbon filter was replaced when the total hydrocarbon concentration in the exhaust reached 10% or 100,000 ppm. For the test runs involving Brakleen which is primarily composed of tetrachloroethene and carbon dioxide propellant, the maximum inlet concentration was expected to be 20,000 ppm based on tetrachloroethene's vapor pressure of 14 mm Hg. Thus, for the Brakleen tests runs the carbon filter was to be replaced when exhaust concentrations measured 2000 ppm with the TVA FID.

A new unused carbon filter and Colorimetric Indicator were installed at the start of each set of test runs for each product type, and during each test run when the carbon changeout criterion was reached. Prior to use of the carbon filter, the carbon filter assembly (carbon filter, Colorimetric Indicator and assembly hose) was weighed. During each test run the TVA FID was used to measure total hydrocarbon concentrations between the carbon filter exhaust port and the Colorimetric Indicator. When concentrations exceeded 2000 ppm during Test Runs #1 through #5, the TVA monitor was equipped with a 50:1 dilutor and recalibrated. With the 50:1 dilutor installed, a TVA reading of 2000 ppm indicates an actual concentration of 100,000 ppm. When exhaust concentrations consistently exceeded 100,000 ppm or 10% of the inlet concentration, the carbon filter was considered spent and replaced. The spent carbon filter assembly was then disconnected and weighed to determine the mass of vapors and gases which had been adsorbed by the carbon filter. The test run was continued after a fresh carbon filter and Colorimetric Indicator were installed. Use of a carbon filter was continued through a subsequent test run(s) for the same product type until the changeout criterion was reached. During each test run, the specific aerosol cans treated while each carbon filter was being used were recorded in the Navy Industrial Hygienist's field log. Additionally, the Colorimetric Indicator was periodically checked during the test runs to determine if any significant color change had occurred to indicate that the carbon filter had reached its capacity.

Field test results for the objectives on carbon filter effectiveness for the three product types are discussed below:

Objective 3a

Carbon filter capacity was determined in terms of the total number of waste aerosol cans processed and the total mass of aerosol can contents removed by the Aerosolv®System before carbon filter changeout was required. Additionally the total mass adsorbed on each carbon filter used during the field test was determined to evaluate filter adsorption capacity for each of the products tested. Table 8, below, summarizes carbon filter performance results for each of the carbon filters used in the field test runs:

Table 8
Katec Field Test Results: Carbon Filter Performance Summary

Product Category	Carbon Filter ID #	Test Run	# Cans Treated	Average Fullness	# Cans Treated per Filter	Mass of Can Contents (lbs.) Removed by System		Mass Adsorbed to Filter (lbs.)	
						During Test Run	Total per Filter	During Test Run	Total per Filter
Paint	1	1	318	23%	318	46.4	46.4	7.0	7.0
	2	1	32	54%		11.2		1.7	
		2	205	17%	237	22.8	34.0	5.1	6.8
	3	2	529	9%	529	33.2	33.2	6.8	6.8
	4	2	289	11%		20.0		6.5	
		3	6	37%	295	1.3	21.3	-	6.5
	9	3	185	30%	185	33.5	33.5	4.9	4.9
	Mean				**313**		**33.7**		**6.4**
	Std. Dev.				**131**		**8.9**		**0.9**
HydroCarbon/	5	4	250	42%	250	93.2	93.2	12.1	**12.1**
Lubricant	6	5	100	87%	100	77.4	77.4	11.3	11.3
Chlorinated	8	6	182	22%		45.9		1.0	
Solvent		7	48	100%	230	56.4	102.3	0.8	1.8
TOTALS:			**2144**			**441.3**		**57.2**	

Notes:
(1) Only 6 aerosol cans were treated during Test Run #3 while Carbon Filter #4 was installed on 9/2/98 before saturation occurred; however, testing of the system continued for an additional 126 aerosol cans before Carbon Filter #4 was replaced.
(2) Carbon Filter #6 was not saturated (exhausted) at conclusion of test run
(3) Carbon Filter #8 was not saturated (exhausted) at conclusion of test run
(4) There was no Carbon Filter #7

Carbon filter effectiveness results for each aerosol can product evaluated is discussed below:

Paint Aerosol Can Products. During the paint test runs a total of 5 filters were saturated and required changeout. The average (mean) amount of aerosol can contents processed by the Aerosolv® System before each filter became saturated was 33.7 lbs. with a standard deviation of 8.9 lbs. Therefore, the system can process 25.2 lbs of paint aerosol can contents before the filter is saturated (lower 90% confidence limit).

The average (mean) number of aerosol cans processed by the Aerosolv® System before each filter became saturated was 313 with a standard deviation of 131. Using the number of cans to assess filter capacity without indicating the fullness of the cans processed would be misleading. The average fullness of cans processed for each of the filters saturated varied from 9% for Filter #3 to 30% for Filter #9. The average fullness of the 1564 cans processed during the use of the 5

saturated carbon filters was 17%. Therefore, the system can process at least 187 waste aerosol paint cans (lower 90% confidence limit) with an average fullness of 17% before the filter is saturated.

Carbon Capacity was also evaluated in terms of mass of volatiles from aerosol paint products adsorbed prior to changeout (saturation). For the saturated filters the average mass adsorbed was 6.4 lbs with a standard deviation of 0.9 lbs. Therefore the carbon filter can adsorb 5.6 lbs before it becomes saturated (lower 90% confidence limit).

Hydrocarbon Lubricant & Cleaners Category. Only one of the two carbon filters used, filter # 5, was saturated during the two CPC test runs. This filter adsorbed 12.1 lbs while the Aerosol® System processed 250 waste aerosol cans with an average fullness of 42% before this carbon filter was replaced. Filter #6 which was also used did not reach capacity at the end of Test Run #6. At the end of this test run 100 waste aerosol cans with average fullness of 87% had been processed and the filter had adsorbed 11.3 lbs. These results indicate that the carbon filter had about a 60% greater capacity for this type of aerosol can product than for the paint products tested. This is consistent with the data from Table 3 that which shows that the CPC tested contained halogenated propellants which are expected to adsorb strongly to carbon. Other hydrocarbon lubricant and cleaner products may not contain propellants which adsorb strongly to carbon, and consequently carbon filter capacity for these products would be less.

Chlorinated Solvent Category. Only one carbon filter was used during the two Brakleen test runs and it did not reach saturation. At the end of the two test runs during which this filter was used, 230 waste aerosol cans with 38% average fullness had been processed. Only 1.8 lbs were adsorbed onto the filter, indicating it had more capacity. These results would be expected for Brakleen aerosol can products since (1) the propellant, carbon dioxide, is not adsorbed by carbon, and (2) the primary ingredient, tetrachloroethene, is a relatively high boiling liquid which would not be expected to volatilize a great deal over the short duration of these two test runs.

Objective 3b

The total hydrocarbon concentrations in carbon filter emissions at breakthrough were measured to serve as the basis for establishing appropriate criterion for replacement of the carbon filter during operation of the technology. Plots of the TVA monitoring of the carbon filter exhaust are included in Appendix A-4. Generally, once concentrations measured in the carbon exhaust reached a few hundred ppm there was a relatively rapid increase in concentration to the 100,000 ppm carbon changeout criterion. For carbon filter #1, for example, carbon filter emission concentrations reached 200 ppm after 291 cans, but then reached 100,000 ppm in about 60 minutes of operation while processing only 27 additional aerosol cans.

During the paint test runs the Navy (reference report) collected a total of 5 carbon tube samples for analysis of specific target analytes (OSHA Method 07) to assess emissions from the carbon filter. These samples were not part of the approved Field Test Plan and were taken without an agreed upon sample collection and analysis protocol. Three of the five samples were collected after the Colorimetric Indicator and were therefore subject to dilution from the atmosphere. Additionally, the TVA monitor indicated very low carbon exhaust emissions when cans were being punctured and these samples were being collected (0 to 20 ppm). The remaining two samples were taken from the exhaust port prior to the Colorimetric Indicator using the same

monitoring port that was used for the TVA monitor. Neither sample found detectable levels of analytes. One these two samples (PW980837) was taken during for a 5 minute period in Test Run #1 when two cans, 27% (can # 22) and 15% (can # 12) full, were punctured. The average FID measurement for the five minute period prior to removing the TVA probe from the exhaust port and just before taking the charcoal tube sample was approximately 2200 ppm. The Navy IH log indicates that the other sample (PW980808) was taken for a 15 minute period during the pre-test period during when cans were not being punctured and carbon exhaust emissions were low (2-3 ppm).. There is no assurance that these charcoal tube samples were collected from gases being discharged from the carbon canister and not from the atmosphere via the saturation indicator. Because the aerosol can puncturing unit on the inlet side of the carbon filter is designed to be sealed when cans are not being punctured, the source of the actual sample may well have been the atmosphere and not the carbon filter. Consequently, because of the above-mentioned concerns these samples cannot be considered representative of the carbon exhaust emissions and are not included in this report.

Objective 3c

Assess the adequacy of the established Standard Operating Procedures (SOPs) in determining when the carbon filter is spent and needs replacement.

Katec, Inc. requested that DTSC evaluate their Colorimetric Indicator as the primary method for determining when the carbon filter has reached capacity and requires replacement. According to Katec, Inc. the color of the media in the indicator's display window changes from a magenta to black when the filter becomes saturated and needs to be replaced. As discussed in Section 2, Description of Technology, the permanganate reaction product is not black, but dull brown in color. During the seven field test runs six carbon filters were replaced when total hydrocarbon emissions measured with an FID reached 100,000 ppm. DTSC staff and Navy operators routinely checked the Colorimetric Indicators that were used for these filters during the test runs and upon changeout of each carbon filter. A significant color change was never observed. DTSC staff field notes as well as the Navy Industrial Hygienist's field log document that there were no visual color changes observed in the indicators during any of the test runs to indicate that a carbon filter was saturated and needed to be replaced.

The results are conclusive for paint aerosol can products and for hydrocarbon lubricants and cleaners that the colorimetric indicator is not an appropriate device for determining when to replace the carbon filter. For halogenated products the effectiveness of the indicator could not be determined because the carbon filter used for both Test Runs # 6 and #7 involving Brakleen aerosol cans never reached its capacity nor had significantly high levels of breakthrough emissions.

Based on the field test results, appropriate methods for monitoring the carbon filter would include (1) continuously monitoring the carbon filter exhaust, or (2) weighing the carbon filter before use and periodically during use. A more problematic, but still possible, method would be to limit the fullness of the cans and to count the number of cans treated before carbon replacement.

4.8 Results: Objective 4, Assess Worker Health & Safety

The primary sources of emissions that may present a hazard to worker health and safety during operation of the Aerosolv® System are the fugitive emissions from the Aerosolv® Puncturing Unit and emissions from the carbon filter. To evaluate actual worker exposure for the specific conditions encountered during the test runs the Navy collected personal monitoring samples in the operator's breathing zone, both long and short term exposure samples. Selected area samples were also collected from several locations, including immediately downwind of the Aerosolv® Puncturing Unit and at the carbon filter exhaust. These charcoal tube samples were analyzed in accordance with OSHA Method 07 for specific constituents expected to be found in the product(s) being tested. The analytes which were included in these analysis are indicated in Table 5. The detailed results of these analyses are provided in Appendix C, the U.S. Navy Field Test Report (not included in report, available upon request)

In addition to the personal and area sampling, continuous monitoring and recording organic vapor analyzers with a flame ionization detector (FID) were used to qualitatively assess total hydrocarbon emissions immediately downwind of the Aerosolv® Puncturing Unit and at the carbon exhaust during each field test run. The monitoring location immediately downwind of the puncturing unit (see Figure 3) represented the area where the high potential breathing zone exposure might occur. These data are presented in Appendices A-4 and A-5 (not included in report, available upon request). As a conservative assumption, the relative concentrations of chemical constituents in the fugitive emissions from the puncturing unit during the puncture of a can be estimated to be about the same as the relative concentrations of the ingredients in the can.

The windspeed was continuously monitored to qualitatively assess whether the FID measurements of hydrocarbon emissions downwind of the Aerosolv® Puncturing Unit were adversely diluted by wind conditions. The wind speed data logger continuously recorded 15-minute average windspeeds for the duration of each of the field test runs. These results are presented in Appendix 6 - Wind Speed Data. Mean wind speeds recorded during the seven test runs ranged between 1.6 to 2.5 mph. These data indicate some downwind dilution occurred. However, windspeeds were sufficiently low that the FID measurements were considered useful in assessing potential hydrocarbon emissions levels.

DTSC Industrial Hygiene staff participated in the development of the Field Test Plan, reviewed the Site Health and Safety Plan for the field test, and reviewed the report that the Navy submitted providing the field test data collected and a summary of the field test results. The conclusions of this review with respect to the specific objectives follow.

Objectives 4a and 4b. Determine Worker Exposure Levels. The data do not support the objective that occupational exposed individuals will not be exposed beyond occupational exposure levels. The worker breathing zone monitoring results to evaluate worker exposures during the field test do not indicate an overexposure with respect to the levels and standards established in state and federal regulations for protection of worker health and safety (see Table 2). However, the chemical speciation monitoring of the worker was done primarily upwind, did not fully reflect the aerosol can contents, and is not readily correlated to the direct read instruments.

Objective 4c. Determine Whether Emissions Exceed 10% of the Lower Explosive Limits (LEL). The data submitted by the Navy are not adequate to support a conclusion that emissions from operations of the Aerosolv® System would limit exposure to less than 10% of the LEL. Only results of the TVA 1000 monitoring, not a direct read LEL meter, were reported. The relative response of the TVA 1000 to the expected gases and propellants (e.g., propane and butane) should be considered.

Objective 4d. Determine Effectiveness in Preventing Liquid Releases. If the spring-loaded handle is slowly released after puncturing the aerosol can and the seals and O-rings are properly maintained, the unit will be effective in preventing releases of the liquid contents of the aerosol cans.

DTSC Industrial Hygiene staff also assessed the occupational health and safety in the operation of the Aerosolv® System. A number of occupational health and safety recommendations were made which include operation of the Aerosolv® System outdoors (no structures / walls near the unit) with cans not more 25% full, and not containing herbicides, pesticides adhesives or corrosives (See Section 6, Conclusions).

4.9 Field Test Observations: Equipment Design and Operation

During the field test observations were made on how the Aerosolv® System and its components were operated and maintained, and potential problems with performance and reliability were identified.

Operational Procedures

The field test plan specified that the operator was to follow the Katec, Inc. Aerosolv® 6000 Instruction Manual for operating the technology. DTSC staff did not observe Navy PWC staff referring to the Katec Instruction Manual during the field tests. The operator did not routinely check the conditions of the puncture pin or the O-rings which prevent leakage from around the puncture pin. The Instruction Manual specifies that these are to be inspected and cleaned after puncturing 500 cans. Although the manual does not mention rotating the can in the unit and puncturing the can with more than one hole, Navy personnel punctured some cans with two or three holes to facilitate draining.

Aerosolv® Puncturing Unit

Puncturing and Draining Operation. Gradually releasing the handle allows the aerosol can contents to discharge through the bottom of the unit into the liquid collection drum. The handle must be released slowly to avoid rapid release of the can contents and the potential for uncontrolled releases of the gases and liquids. For viscous materials such as paint, the can should be adequately shaken before puncturing and more than one puncture hole may be necessary. To make additional drain holes the can is rotated and punctured again before being removed from the unit.

Lock and Sealing Knobs. The *lock knob* on the first Aerosolv® Puncturing Unit failed after approximately 320 cans and failed on the second unit after approximately 1000 cans. In both cases the puncturing unit was rendered unusable and had to be replaced so that the field test

could continue. The *sealing knob* failed during Test Run #2 but the unit was not replaced at that time. The steel screws associated with the *lock knob* and *sealing knob* screw into a threaded hole in the cast aluminum body and cap of the unit; no threaded steel sleeves or inserts are used. Consequently, the threaded holes in the cast aluminum tend to strip out with repeated tightening and loosening of the knobs. When this occurs, the body or cap requires replacement. Katec, Inc. has advised DTSC that the manufacturing process has been modified for future Aerosolv® Puncturing Units to install HeliCoil inserts in the body and cap to prevent this problem from occurring.

Puncture Pin. DTSC staff inspected the Aerosolv® Puncturing Units used at the end of the field test. On two of the units, the puncture pin protruded beyond the inner edge of the can shoulder gasket. On these units the puncture pin appears to impede the insertion of the aerosol can into the barrel of the unit, preventing the can shoulder gasket from sealing adequately. During the field tests (8/25/98) the operator experienced difficulty in getting a newly installed unit to work properly, most likely due to this problem. Because the aerosol can must be pushed down far enough into the barrel of the unit to cause the spring-loaded check valve to open, such a condition could prevent proper opening of the check valve, thereby restricting flow of the liquid and gases released during puncture into the liquid drum below.

Check Valve. The check valve is composed of a spring-loaded, Teflon® disk. Due to the material's rigidity, the disk does not form a positive seal along the contact surface at the base of the Aerosolv unit. Consequently, release of head-space volatiles can occur when the system is idle or during periods of non-use. The liquid collection drum assembly which includes the attached Aerosolv® Puncturing Unit, was weighed before and after periods of non-use to determine the amount of such losses:

Test Run #3: 0.4 lbs lost between 13:22 on 9/22/98 and 13:12 on 10/7/98
Test Run #4: 0.3 lbs lost between 15:49 on 8/25/98 and 8:21 on 8/28/98;
Test Run #5: 0.6 lbs lost between 15:39 on 8/28/98 and 10:43 on 8/31/98;

O-ring Wear and Compatibility. During inspection of the units, severe wear of the inner O-ring on Aerosolv® Puncturing Unit #2 was observed. Figures 5 and 6 show pictures of the inner and outer O-rings that were inspected.

Figure 5
Inner O-ring Showing Wear

Figure 6
Outer O-ring

This particular unit had been used for puncturing paint cans and was replaced when the *lock knob* failed after puncturing approximately 1000 cans. The O&M Manual specifies that the O-rings are to be inspected every 500 cans. Inspections of the O-rings were not observed during the field test nor indicated in the Navy's field logs. Katec indicates that the composition of the O-rings, is Viton®, a fluorocarbon rubber manufactured by E.I. Dupont de Nemours Company. According to the manufacturer, Viton® may not be appropriate for use with certain constituents found in aerosol cans, such as ketones (e.g., acetone, MEK MIBK, and MIAK) and low molecular weight esters and ethers, (e.g., methyl t-butyl ether). If the O-rings fail, there is a potential for release of can contents during puncturing through the annular space around the puncturing pin. Consequently, O-ring maintenance should be performed according to the manufacturer's recommendations.

Silicone Gasket Performance and Compatibility. According to Katec's submittals, the annular flat-shaped gasket which is intended to provide a seal around the inserted aerosol can, is composed of silicone rubber. Information obtained from Watson-Marlow, Inc., a distributor, indicates that silicone is incompatible with a wide variety of organic solvents, including chlorinated solvents. During the tests of the technology on CPC and on Brakleen, the gasket swelled and deformed. The deformation was significant enough to prevent the can from seating properly in the unit and the gasket had to be replaced twice during the CPC test runs and twice during the Brakleen test runs.

Carbon Filter Construction

At the end of the field test, the top of a carbon filter was removed to observe the composition and construction of the carbon filter media. Figures 7 and 8, photographs of the carbon filter inspected, show the fiber layers to be poorly placed in the filter. Void spaces in the carbon filter result from the placement of the fiber support matrix that separates the layers of carbon fiber, and a mismatch between the square shape of the filter matrix and the circular cross-section of the container. As a consequence, there is potential for short circuiting of the gases in the carbon bed which may shorten the time to breakthrough.

Figure 7
Carbon Filter with Upper Fiber Layer Removed

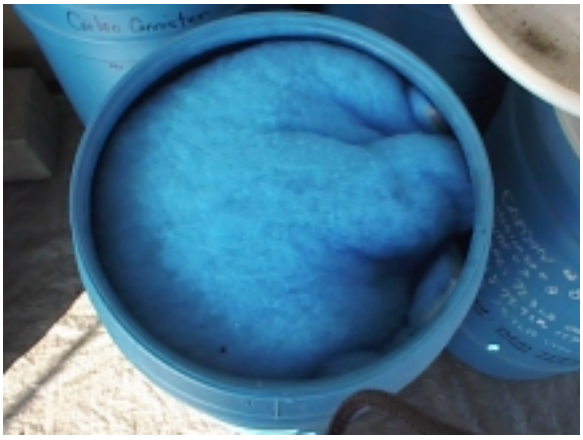

Figure 8
Carbon Filter with Top Removed

Section 5.
Regulatory Considerations

5.1 Regulation of Waste Aerosol Cans

Non-empty waste aerosol cans may be regulated as hazardous wastes under both federal and state regulations. EPA regulates waste aerosol cans on the basis of ignitability, toxicity, and reactivity. However, waste aerosol cans are exempt from federal regulations if they meet the federal definition of an empty container contained in §261.7(b)(iii)(A) of RCRA:

> "No more than 3 percent by weight of the total capacity of the container remains in the container or inner liner if the container is less than or equal to 110 gallons in size, or"

Therefore waste aerosol cans which have been emptied to meet this definition are not regulated under federal law.

Under California regulations, CCR 66261.7(m)(1) Contaminated Containers,

> "Provided that they are not a RCRA regulated hazardous waste, as defined in Section 66260.10 of this division, aerosol containers are exempt from regulation under this division and Chapter 6.5 of Division 20 of the Health and Safety Code if the aerosol container was emptied of the contents and propellant to the maximum extent practical **under normal use** (i.e., the spray mechanism was not defective and thus allowed discharge of the contents and propellant)."

Therefore, waste aerosol cans which meet the federal definition of an empty container **and** have been emptied to the maximum extent practical, either through normal use or treatment, are exempt from regulation as a hazardous waste.

5.2 Hazardous Waste Treatment Permit Requirements

Treatment of hazardous waste in California requires a treatment permit or other authorization from DTSC. A specific exemption exists for treatment of spent waste aerosol cans. Under Health and Safety Code section 25201.14(a)(1), the following activities are exempt from the Health and Safety Code:

"puncturing, draining, or crushing of aerosol cans, at ambient temperature, subject to both of the following:

> (A) The equipment used is designed to capture the gaseous and liquid contents of the cans, prevent fires, explosion, and unauthorized releases of hazardous constituents, and prevent worker exposure to hazardous materials released from the cans, and is certified by the department for use in compliance with this section pursuant to Section 25200.1.5. . .,
>
> (B) The aerosol cans are recycled as scrap metal."

This is a conditional exemption. A generator treating aerosol cans under this exemption must comply with Health and Safety Code Sections 25201.5(d) and (e) which specify the applicability, operational, record keeping, and notification and reporting requirements. The generator must also comply with the conditions specified in the certification.

The exemption under Health and Safety Code section 25201.14 for treatment of aerosol cans using a certified technology is limited to waste aerosol cans generated on site. A hazardous waste treatment or storage facility managing wastes generated at other locations does not qualify for this exemption.

In addition, this exemption is only for treatment which is not subject to federal permit requirements. According to information from the EPA's RCRA, Superfund & EPCRA Hotline Training Module (EPA530-R-049, PB98-108 046, November 1997), "If the aerosol can is holding a compressed gas, it is unclear whether the act of venting to render the can empty would constitute treatment. This question must be answered by the appropriate EPA Region or authorized state. When the aerosol can is holding a liquid, the applicability of the regulations depend on whether the can is being sent for scrap metal recycling of disposal. If the can is sent for scrap metal recycling, the can and its contents are exempt from regulation as a scrap metal under [40 CFR] 261.6(a)(3)(iii). The act of emptying the can may be an exempt recycling activity under 261.6(c), and any residues from emptying the can would be regulated if they are listed or exhibit a characteristic of hazardous waste." A generator may contact DTSC's Resources Recovery Unit for more information on determining the applicability of the federal recycling exemption to their activities.

Another exemption from federal permit requirements exists for generators treating wastes generated on site. If the aerosol can is generated on site, and the puncturing is carried out in a tank or container in conformance with 40 CFR 262.34, the generator does not need a federal hazardous waste treatment permit for this activity.

5.3 Hazardous Waste Management Benefit

Although the Aerosolv® System treats waste aerosol cans for recycling as scrap metal, there may not be a significant net reduction in hazardous waste generated. This is due to the spent carbon filters which must be managed as hazardous waste if they meet a hazardous waste criterion or listing. The following analysis is presented based upon results of field testing.

Each aerosol can treated and recycled as scrap metal prevents 107 grams of metal (the average tare weight determined for paint aerosol products in the field test) from being disposed as hazardous waste. However, each time a carbon filter is replaced when it becomes saturated approximately 65 pounds of hazardous waste are generated. This offsets the benefit of recycling the cans as scrap metal. In the case of the aerosol paint cans treated during the field tests, approximately 200 waste aerosol cans were treated before each carbon filter became saturated (the 90% confidence limit of the mean was 187 cans per filter). Thus the amount of hazardous waste recycled as scrap metal for each filter used was 47 pounds (200 cans x 107 grams steel/can) versus the 65 pounds of hazardous waste generated for each spent filter. This results in a net increase in hazardous waste of 18 pounds.

If the average fullness of cans treated is significantly less than those used in the field tests, then more cans could be treated per filter. In this case there may be a net reduction of hazardous waste generated, depending on the total number of cans that are processed before filter saturation.

5.4 Air District Permit Requirements

Air emissions from aerosol can puncturing and draining operations in California are regulated by the local air pollution control district (APCD) or air quality management district (AQMD). There are 35 separate air districts located in 14 air basins in California. Each air district has their own set of rules for the control of emissions from any project within their district. Depending on the air district in which the technology is to be operated and the amount and types of aerosol cans being punctured and drained, a permit to operate from the local air district may be required.

Hydrocarbon emissions from aerosol can puncturing and draining operations are classified criteria pollutants. For criteria pollutants, air district rules to control emissions from both new sources and modification of existing sources are generally divided into two programs: (1) New Source Review (NSR) addresses permitting requirements for sources sited in non-attainment areas, and (2) Prevention of Significant Deterioration (PSD) addresses sources sited in areas which are in compliance with national air quality standards for criteria pollutants. In general, criteria pollutants are those for which there are national and state ambient air quality standards. Those areas where air quality meets the federal standards are PSD areas. Air districts that do not meet the standards for criteria pollutants are non-attainment and NSR applies. A permit to operate and the application of Best Available Control Technology (BACT) is a primary NSR requirement. To obtain a permit to operate in a non-attainment area an offset may be required. Where PSD applies, districts set threshold levels for emissions of criteria pollutants for requiring a permit to operate or BACT. California air districts have not established specific BACT's for aerosol can puncturing and draining technologies. For different types of sources involving similar air emissions, districts have established activated carbon treatment as BACT. Currently, districts regulate aerosol can puncturing and draining operations on a case-by-case basis. If activated carbon treatment were required as BACT, the district would include the method of monitoring the carbon for breakthrough and the specific criteria for changeout of the activated carbon filter. The user would need to comply these BACT requirements in addition to meeting the specific criteria set forth in the certification conditions.

Air districts also regulate sources of air toxic emissions. Best Available Control Technology for Toxics (TBACT) is required on sources of air toxic emissions which have health risks that exceed levels specified by the district. Some constituents found in aerosol can products would be considered air toxics by the districts. Additionally, air districts have specific prohibitory rules such as visible emission standards and mass loading standards as well as nuisance rules which must be complied with.

After defining a project and specifying the basic equipment, the applicant needs to calculate both separate emissions from each component of the source and a total for the project to determine the applicability of various permit requirements. In some cases, no control requirements may apply. If a source is small enough, it may be exempt from any permit requirements. In some cases the applicant may have to submit a complex application containing an analysis for control technology requirements (e.g., BACT and TBACT), air quality analysis, and proposal for air

quality impact mitigation. The analysis would include a justification of the applicant's proposed BACT or TBACT.

The above discussion is not intended to be comprehensive. The potential user or permit applicant should contact their local AQMD or APCD to determine if a permit to operate would be required and what permit conditions might be imposed.

Section 6.
Conclusions

6.1 Removal To 3% Capacity

The Aerosolv® System effectively removed the residual contents for waste aerosol cans less than 25% full. In six of the seven test runs conducted for the field test, the Aerosolv® System removed the residual contents in aerosol cans runs to below 3% of their original net contents (upper 95% confidence limit of the mean), the federal definition of an empty container. For the one paint test run which did not meet this objective, Test Run #1, the Aerosolv System removed the residual contents to 3.41% (upper 95% confidence limit). As expected due to higher solids content in paint products, the Aerosolv® System was less effective in removing residuals from paint products than for the other two product types tested. Additionally, the two paint test runs involving fuller cans showed higher percent residuals remaining. Because the aerosol cans treated during the three paint test runs differed in terms of the products tested and the average fullness, it is not appropriate to combine the results from all three test runs. Since the aerosol cans treated in Test Runs #1 and #3 appear similar it may be appropriate to combine these results. The upper 95% confidence limit of the mean for Test Runs #1 and #3 combined was determined to be 2.81%.

6.2 Capture Efficiency

The Aerosolv® System captured 83.2%, 96.8% and 94.9% (lower 90% confidence limits of the means) of the liquid and gaseous contents removed from the respective paint, CPC and Brakleen products tested. The amounts not captured were lost to the atmosphere due to fugitive emissions around the puncturing device or emissions from the carbon filter.

6.3 Carbon Filter Effectiveness

The carbon filter was effective in capturing emissions from the Aerosolv® System during the puncturing and draining aerosol cans. The capacity of the carbon filter, however, was limited. Plots of the breakthrough curves indicate that the emissions levels increased rapidly as the emissions levels approach the changeout criterion of 100,000 ppm total hydrocarbons. The field test results show that the Aerosolv® System can process at least 187 waste aerosol paint cans (lower 90% confidence limit) with an average fullness of 17% before the filter reaches the changeout criterion. The field test results also indicate that the mass adsorbed on the carbon filter before changeout was about 60% greater for the CPC products tested than for the paint products. This is probably due to the propellant in the CPC product tested being one that is known to strongly adsorb onto carbon, while other propellants do not adsorb as strongly. A filter was not saturated during the Brakleen aerosol product test runs and a relatively low mass of tetrachloroethene was adsorbed onto the carbon filter.

6.4 Carbon Filter Monitoring

The Colorimetric Indicator did not work as claimed and did not effectively monitor the carbon filter for breakthrough. Based on the field testing experience, the best approach to determine when to replace the carbon filter is to continually monitor the carbon filter exhaust with a TVA-

FID monitor (or equivalent). The next best approach would be to weigh the carbon filter before and during use to determine when it has reached capacity. Because of the variations in sizes and fullness of waste aerosol cans, the use of can counting to monitor the carbon would be a more difficult method for monitoring the carbon. If a TVA-FID is used to monitor the carbon exhaust, the monitoring should be continuous to detect the rapid increase in emissions after exhaust concentrations reach a few hundred ppm.

6.5 Katec Aerosolv® Puncturing Unit

Based on observations during the field test, certain mechanical components of the Aerosolv® System lack reliability. The lock knob failed on one Aerosolv® Puncturing Unit after less than 350 cans and failed on another after approximately 1000 cans. In each case, the failure rendered the unit inoperable. On another unit, the puncture pin was observed to protrude into the barrel of the unit when in the retracted position, preventing proper operation.

6.6 Katec Aerosolv® System Compatibility with Aerosol Can Products

Based on observations made during the field test, the Aerosolv® System is not compatible with compounds present in chlorinated solvent products or with hydrocarbon cleaners and lubricants which contain halogenated propellants. The hydrocarbon cleaner/lubricant used during the field test contained Freon propellants as well as Freon-113 solvent, while the Brakleen product contained tetrachloroethene. For these product types the gasket in the unit swelled such that a can would not seal properly before puncturing. Because of the risk of uncontrolled emissions during the puncturing operation, the Aerosolv® System should not be used for products containing halogenated compounds or other constituents which are not compatible with the seal and gasket materials.

6.7 Liquid Collection Drum

The technology's performance and safety when the liquid collection drum had a minimum of headspace was not fully evaluated during the field test. The 55-gallon liquid collection drums used during the field test were never filled to more than 29% of their capacity, well below the 70% maximum capacity specified in the Model 6000 Instruction Manual. Reduced headspace would mean higher pressures in the liquid collection drum during puncturing operations and consequently a higher potential for emissions and releases around the puncturing unit's gasket and seals.

The system's performance was established with the 55-gallon size drum. Katec's instruction manual indicates that a 30-gallon drum may also be used. Additional testing of the system with a smaller 30-gallon drum and reduced headspace would be required to evaluate its performance.

6.8 Control of Fugitive Emissions During Non-use Periods

Weight measurements of both the liquid collection drum and the carbon filter assemblies indicate that significant losses of volatiles can occur during periods of non-use. To prevent such losses, the carbon filter should be disconnected from the liquid collection drum, and the inlet and exit ports of both the carbon filter and the liquid collection drum should be capped or plugged at the end of each day's operation or whenever the Aerosolv® System is not in use.

6.9 Worker Health and Safety

Based on field test results, it could not be determined that potential exposures will not occur in the absence of appropriate engineering and administrative controls, or personal protective equipment. Therefore, each specific operation should be evaluated to determine the appropriate conditions required to address potential worker health and safety concerns. Appropriate safety instructions to end-users to promote safe operation of Aerosolv® System include:

- Operate the technology out-of-doors in an open, well-ventilated area sufficiently distant from any walls or other structures such that air flow is not impeded. The operator should stand in a position upwind of the Aerosolv® System, and use site-specific engineering and administrative controls.

- Wear appropriate personal protective equipment including use of approved respiratory equipment based on the specific conditions and chemical monitoring at the job site.

- Ensure that both the Aerosolv® Puncturing Unit and the 55-gallon drum are properly bonded and grounded. If a material is used between the threads of the Aerosolv® Puncturing Unit and a metal 55-gallon liquid collection drum, the material shall be conductive (not a potential insulator such as Teflon tape) unless proper bonding is provided between these components or between each component and ground. If a non-conductive plastic 55-gallon liquid collection drum is used, the user shall determine whether a ground wire reaching the liquid inside the drum is needed to dissipate any static charge generated in accumulated liquids.

- Operators should wear safety goggles and appropriate protective clothing to provide splash protection.

- Operators should wear gloves compatible with the ingredients in the cans and the work activities conducted.

- Operators should be advised that emissions from the carbon filter exhaust and fugitive emissions near the Aerosolv® Puncturing Unit may at times exceed the lower explosive limit. As carbon filter emission concentrations approach the 100,000 ppm changeout criterion the lower explosive limit will be exceeded. Appropriate engineering and administrative controls are necessary to ensure adequate protection from fire and explosion.

P