April 2000

Greenhouse Gas Technology Verification News

NEWSLETTER Issue 4

Published by the Greenhouse Gas Technology Verification Center

A third-party verifier of greenhouse gas (GHG) technology applications supported by the U.S. EPA Environmental Technology Verification (ETV) program.

Center Begins Life Cycle Verification of Low GHG MSW Processing Facility

Could Process Replace Conventional MSW Technologies?

SUBBOR Waste Processing Digester Under Construction at Guelph, Ontario

In 1997, methane emissions from municipal solid waste (MSW) landfills accounted for 37 percent of anthropogenic methane emissions in the United States. In addition to being a significant source of GHG emissions, landfills can cause community-level odor and land use concerns, produce volatile organic compound and toxic air pollutants, and produce liquid wastes which contaminate ground water supplies.

In 1999, Super Blue Box Recycling Corp., an affiliate of Eastern Power LTD. of Ontario, Canada, contacted the Greenhouse Gas Technology Verification Center to request independent, third-party performance verification of their new MSW processing technology. The technology, referred to as Super Blue Box Recycling or SUBBOR, replaces conventional landfills with a process that rapidly degrades MSW in an enclosed multi-stage digester system (see photo). SUBBOR accepts and processes conventional unsorted MSW as received from trash collection vehicles, and produces a suite of recyclable materials, bio-gas, electricity for sale to the grid, process heat, and once processing is complete, an organic peat product that can be used as a soil amendment (see process diagram on page 4). Because SUBBOR is an enclosed treatment process, it reduces or eliminates the release of methane and other pollutants typically associated with

(continued on page 4, see SUBBOR)

Verification Activities Increase Worldwide

Widely Different Levels of GHG Verification May Occur

The verification of environmental technologies and projects appears to be increasing, and new technology verification programs are emerging around the world. Over the past two years requests for collaboration with the Center have increased significantly as countries in North America, South America, and Asia begin planning verification programs and GHG verification is addressed by 3 United Nations Groups (UNCTAD, UNEP, UNFCCC), the World Bank, the International Standards Organization, multi-national businesses like Enron, Dupont and BP/Amoco, and verification organizations including US EPA's ETV Program (12 separate organizations), ETV Canada, DNV, Ecosecurities, Lloyds Register, SGS, and others.

"The Center interacts with most of these organizations," says Stephen Piccot, GHG Center Director, "and it's apparent that verification has widely different meanings to these different organizations." Recently, Mr. Piccot was invited, along with representatives of other verification organizations, to the UNFCCC headquarters in Bonn (see photo on page 3) where verification approaches proposed by the various participants were described. "Approaches varied widely, from a program executed entirely by private sector organizations, to one where governments and/or the UN maintain

(continued on page 3, see Verification)

Center to Verify New Air to Fuel Ratio Controller for IC Engines

In February 2000, the MIRATECH Corporation submitted it's GECO 3001 air-to-fuel ratio controller for performance verification by the Center. The controller is applicable to lean-burn IC engines, and according to MIRATECH, can reduce fuel consumption, production of GHGs and other pollutants, lube oil nitration, and engine maintenance cost. MIRATECH claims the GECO 3001 allows for improved management of air to fuel ratio during engine speed and load variation, and that its closed-loop exhaust oxygen feedback balances operational concerns of fuel economy, maintenance and emissions.

The GECO 3001 Controller Applied to a Gas-Fired IC Engine

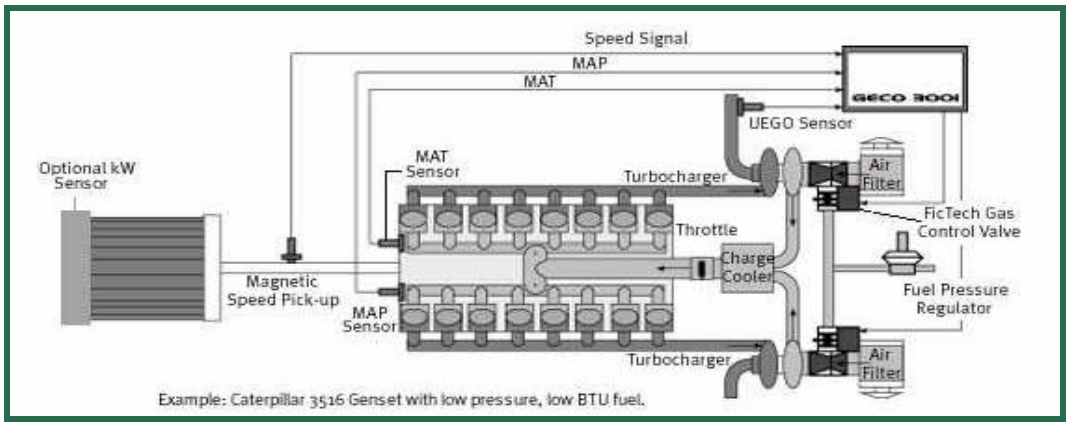

The performance of the GECO 3001 controller will be based on a comparative analysis between a test engine (with the controller installed) and an identical control engine (without the controller installed). For both engines, the Center will quantify fuel savings, criteria pollutant emissions, GHG emissions and emission reductions, and operational performance. The evaluation will characterize, via measurements and other means, fuel consumption rates, GHG, NO_X, CO, and THC emission rates, lubrication oil analysis, engine efficiency, operational availability, and maintenance requirements. The evaluation will be conducted over a 3-month period at a natural gas transmission station located in the southern United States, and should be completed before the end of 2000.

Interest in Early Action Continues to Build

According to Inside EPA Weekly Report (Volume 21, No.10), the GHG debate in the U.S. appears to be turning away from disagreements over the Kyoto Protocol, and toward a discussion of actions that can be taken voluntarily on the domestic front. The publication notes that both environmentalists and industry may begin to reach more common ground this year on tackling global warming domestically from outside the Kyoto Protocol. This would include the use of voluntary actions, government assistance that does not involve traditional command and control strategies, and possibly, a domestic GHG trading program. Chairman of the Senate Environment & Public Works Committee, Bob Smith (R-NH), may pave the way this year by introducing a new early action crediting bill. This would be in addition to early action bills submitted over the last two years by Democratic and Republican Party leaders.

"This all agrees with the feedback we get from our industry stakeholders," said Stephen Piccot, GHG Center Director. "Industry folks seem to be looking for the best alternatives for GHG reductions, especially the technologies that reduce GHG emissions at the lowest cost. They are very engaged in the process we use to locate these types of technologies for verification testing." Piccot added that "the same sort of consensus seems to be emerging between government, industry, and environmental groups in Canada and Europe."

New Electricity Generation Stakeholder Group Meets

The first meeting of the Center's Electricity Generation Stakeholder Group was held on November 9, 1999 in Arlington, Virginia (see photo). About 30 individuals in attended including Center staff and Stakeholder members. The primary goals of the meeting were to determine which technologies the Center should verify, and which verification strategies and parameters are of most interest.

A highlight of the meeting was the technology voting exercise. The Center presented a list of technology areas and types to the group, and asked all participants to vote on which technologies were most in need of verification. The top rated technologies, most of which are related to distributed electrical generation (DG) are:

Diane Wood of Honeywell Power Systems Inc. discusses upcoming microturbine verification test with USEPA staff David Kirchgessner and William Rhodes at the Electricity Generation Stakeholder Meeting

1. Microturbines (gas and diesel)
2. PEM Fuel Cells (gas and dual fuel)
3. Energy Efficiency Improvements
4. Small Industrial Turbines (gas and diesel)
5. Hybrid DG Systems (fully integrated)
6. Reciprocating Engines (diesel and gas)
7. Fuel Reformers

Stirling engines received a moderate level of interest, while technologies in other areas (SF_6, landfill gas, manure management) received fewer votes.

Participants in the group included large and small electricity generators, vendors of fuel cells, turbines, microturbines, stirling engines, IC engines, MSW management, and other technologies, federal and other government organizations, technology finance organizations, and others. As a result of the meeting, the Center is assessing several DG technologies and advanced power generation systems for possible verification testing. The goal is to make final selections by late 2000.

Verification

(continued from page 1)

oversight and publish verification guidelines." At a recent international GHG verification workshop in Vancouver, Canada, an effort to establish an international working group to coordinate GHG verification activitries was proposed, and more recently, an international committee was formed to address GHGs from an ISO 14000 perspective. A reoccurring concern expressed by organizations participating in GHG verification, trading, and emission reduction project activities is that without some international GHG verification guidelines, technology and project-based verifications could vary considerably, undermining the credibility and value of potential future GHG trades, and reducing the credibility of emission reduction claims made by technology vendors and CDM project participants.

UNFCCC expects to present monitoring, reporting, and verification guidelines for the Kyoto Protocol at the upcoming 6th Conference of The Parties being held in The Hague, Netherlands this fall.

UNFCCC Headquarters in Bonn, Germany

SUBBOR Process Diagram

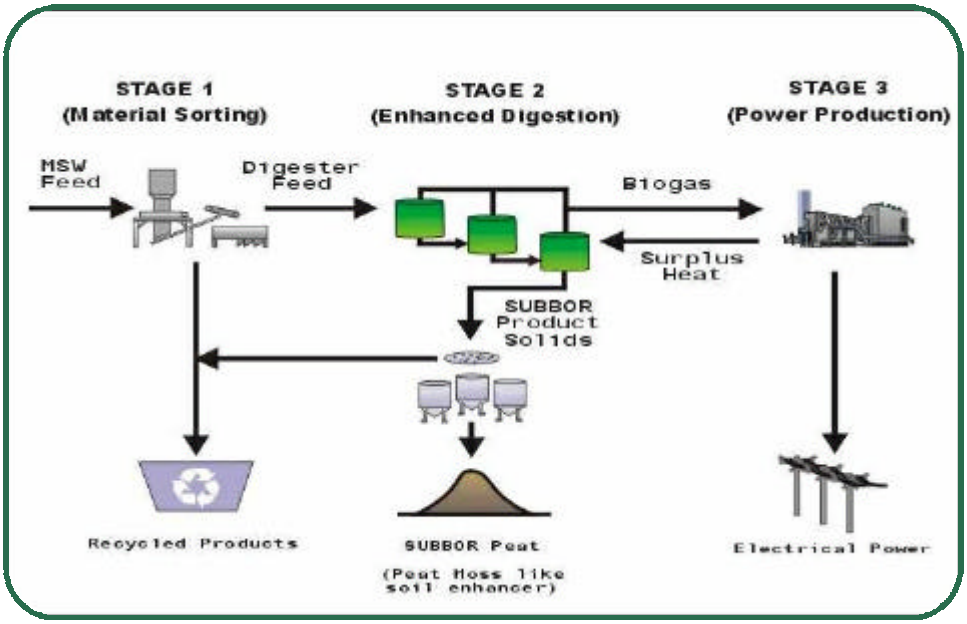

SUBBOR

(continued from page 1)

conventional MSW disposal technologies such as landfills or incinerators. It also mitigates odors, ground water contamination from landfill leachate, and, due to a relatively small footprint, reduces land use. Bruce Holbein, SUBBOR's Director of Technology for a facility under construction at Guelph, Ontario says, "SUBBOR virtually eliminates waste streams; the relatively low emissions from biogas combustion for electricity production is an emission that, if not produced by SUBBOR, would occur at electricity generation stations." Holbein added, "MSW accounts for about 5 percent of Canada's total GHG emissions, so the potential to reach a 5 percent reduction commitment under the Kyoto protocol makes the SUBBOR verification highly significant for Canada."

The GHG Verification Center will conduct a verification of the new Guelph facility to identify and measure emissions of CH_4 and other GHGs, criteria pollutants including NO_X, SO_2, and total hydrocarbons, and, if present, dioxin. GHG and criteria pollutant emissions from operations associated with the facility will also be determined including garbage collection and delivery operations, and processing and finishing of final products from the recycled materials. An independent Stakeholder advisory panel, made up of MSW technical and policy experts, will assist in the planning and peer review of the SUBBOR verification. Sushma Masemore, Verification Project Director said, “The panel will help ensure we address the issues important to those that have a stake in MSW management technologies, and will help ensure a broadly acceptable and transparent verification occurs.” At the recent Globe 2000 meeting in Vancouver, Canada, Greg Vogt, President of SUBBOR and developer of the SUBBOR technology said, "We're proud that Eastern Power can offer this breakthrough technology to the world, and we have confidence our process will perform well. On the other hand, we know that customers need credible independent verification data to support a decision to invest in SUBBOR rather than conventional landfills. This is why we sought out the GHG Center and are stepping up to the plate to be verified by US EPA's credible and independent ETV program.”

GHG emissions will be determined by the Center via direct process measurements of all significant release points within the SUBBOR facility at Guelph. Emission reductions will be determined by comparing measured emissions with estimated emissions for a suite of conventional baseline MSW management options. Emissions from the suite of baseline technologies will be determined using an internationally accepted and peer- reviewed waste decomposition and life cycle model. Baseline technologies include conventional landfill technologies both with and without gas recovery and use, MSW combustion facilities, and a combination of options involving various conventional recycling alternatives.