SRI/USEPA-GHG-QAP-10
November 2000
Final

Greenhouse Gas Technology Verification Center

A U.S. EPA Sponsored Environmental Technology Verification Organization

Test and Quality Assurance Plan
Honeywell Power Systems Inc.
Parallon® 75 kW Turbogenerator

Prepared By:
Southern Research Institute
Greenhouse Gas Technology Verification Center
PO Box 13825
Research Triangle Park, NC 27709 USA
Telephone: 919/806-3456

Reviewed By:
Honeywell Power Systems Inc. ☒
GHG Center Industry Stakeholder Group ☒
U.S. EPA Office of Research and Development ☒

☒ indicates comments are integrated into Plan

Greenhouse Gas Technology Verification Center

A U.S. EPA Sponsored Environmental Technology Verification (ETV) Organization

Test and Quality Assurance Plan
Honeywell Power Systems Inc.
Parallon® 75 kW Turbogenerator

This plan is reviewed and approved by the Greenhouse Gas Technology Verification Center Technical Staff, the Q/A Manager, the Center Director, the U.S. EPA Pilot Manager, and the U.S. EPA Pilot Quality Manager.

Original signed by:

_____ _____

Stephen Piccot Date
Center Director
Southern Research Institute
Greenhouse Gas Technology Verification Center

Original signed by:

_____ _____

David Kirchgessner Date
Pilot Manager
U.S. EPA

Original signed by:

_____ _____

Sushma Masemore Date
Project Manager
Southern Research Institute
Greenhouse Gas Technology Verification Center

Original signed by:

_____ _____

Nancy Adams Date
Pilot Q/A Manager
U.S. EPA

Original signed by:

_____ _____

Ashley Williamson Date
Q/A Manager
Southern Research Institute

Test Plan Final: November 2000

TABLE OF CONTENTS

Page

1.0 INTRODUCTION 1-1
1.1. BACKGROUND 1-1
1.2. PERFORMANCE VERIFICATION PARAMETERS 1-3
1.3. PARALLON 75 KW TURBOGENERATOR TECHNOLOGY DESCRIPTION 1-4
1.4. TEST FACILITY DESCRIPTION 1-6
1.5. ORGANIZATION 1-8
1.6. SCHEDULE OF ACTIVITIES 1-9

2.0 VERIFICATION APPROACH 2-1
2.1. OVERVIEW OF THE VERIFICATION STRATEGY 2-1
2.2. POWER PRODUCTION PERFORMANCE 2-4
2.2.1. Electrical Power Output and Efficiency at Selected Loads 2-4
2.2.2. Total Electrical Energy Generated 2-7
2.2.3. Electricity Offset From the Grid 2-8
2.2.3.1. Transmission and Distribution Line Losses 2-11
2.3. POWER QUALITY PERFORMANCE 2-11
2.3.1. Electrical Frequency Output 2-12
2.3.2. Voltage Output and Transients 2-13
2.3.3. Voltage and Current Total Harmonic Distortion 2-14
2.3.4. Power Factor 2-15
2.4. OPERATIONAL PERFORMANCE 2-16
2.5. EMISSIONS PERFORMANCE 2-17
2.5.1. Annual Emission Reductions for Test Site 2-18
2.5.2. Annual Emission Reductions For Model Regions 2-20

3.0 DATA QUALITY 3-1
3.1. DATA QUALITY OBJECTIVES AND DATA QUALITY INDICATORS 3-1
3.2. DETERMINATION OF DATA QUALITY INDICATORS 3-5
3.2.1. Turbogenerator Power Output 3-5
3.2.2. Mass Flow Rate 3-8
3.2.3. Fuel Heating Value 3-8
3.2.4. Emissions Measurements 3-10
3.2.5. Other Measurements 3-11
3.2.5.1. Power Quality Measurements 3-11
3.2.5.2. Gas Compressor Electric Power Consumption 3-11
3.2.5.3. Gas Compressor Methane Leak Measurements 3-12
3.2.5.4. Meteorological Data Collection 3-12
3.2.5.5. Fuel Gas Pressure 3-13

4.0 SAMPLING PROCEDURES 4-1
4.1. CONTROL TEST PROCEDURES 4-1
4.2. FUEL GAS SAMPLING PROCEDURES 4-1
4.3. EXHAUST STACK EMISSION MEASUREMENTS 4-3
4.3.1. Gaseous Sample Conditioning and Handling 4-4
4.3.2. Gaseous Pollutant Sampling Procedures 4-5
4.3.3. Calibrations and Quality Control Checks 4-6
4.3.4. Determination of Emission Rates 4-7
4.4. GAS COMPRESSOR METHANE LEAK MEASUREMENTS 4-8
4.5. DOCUMENTAION FOR TURBOGENERATOR OPERATIONAL PERFORMANCE 4-8
4.5.1. Cold Start Time 4-9

5.0 QUALITY CONTROL 5-1
5.1. POWER MEASUREMENTS 5-1
5.1.1. Installation and Set-Up 5-1
5.1.2. Sensor Diagnostics 5-1
5.1.3. Instrument Calibration 5-2
5.2. FUEL FLOW MEASUREMENTS 5-2
5.2.1. Installation and Set-Up 5-2
5.2.2. Sensor Diagnostics 5-2
5.2.3. Independent Performance Checks 5-3
5.2.4. Instrument Calibration 5-3
5.3. FUEL HEATING VALUE MEASUREMENTS 5-3
5.3.1. Sampling System Check Out Procedures 5-3
5.3.2. Instrument Calibration and Repeatability Determination 5-4
5.3.3. Independent Performance Check 5-4
5.4. EMISSION RATE MEASUREMENTS 5-4
5.5. GAS COMPRESSOR METHANE LEAK MEASUREMENTS 5-4
5.5.1. On Site QC Procedures 5-4
5.5.2. Instrument Calibration Procedures 5-5
5.6. METEOROLOGICAL DATA COLLECTION 5-6
5.6.1. Installation and Setup 5-6
5.6.2. Sensor function checks 5-6
5.6.3. Instrument Calibration 5-7
5.7. FUEL GAS PRESSURE 5-7
5.8. INSTRUMENT TESTING, INSPECTION, AND MAINTENANCE REQUIREMENTS 5-7
5.9. INSPECTION/ACCEPTANCE OF SUPPLIES AND CONSUMABLES 5-8

6.0 DATA ACQUISITION, VALIDATION, AND REPORTING 6-1
6.1. DATA ACQUISITION AND STORAGE 6-1
6.1.1. Continuous Meters 6-1
6.1.2. Emission Measurements 6-4
6.1.3. Fuel Gas Sampling 6-5
6.1.4. Gas Compressor Leak Rate Measurements 6-5
6.1.5. Operational Performance Measurements 6-5
6.2. DATA REVIEW, VALIDATION, AND VERIFICATION 6-5
6.3. RECONCILIATION WITH DATA QUALITY OBJECTIVES 6-6
6.4. ASSESSMENTS AND RESPONSE ACTIONS 6-6
6.4.1. Project reviews 6-6
6.4.2. Inspections 6-7
6.4.3. Audits 6-7
6.4.3.1. Technical System Audit 6-8
6.4.3.2. Performance Evaluation Audit 6-8
6.4.3.3. Audit of Data Quality 6-8
6.5. DOCUMENTATION AND REPORTS 6-8
6.5.1. Field Test Documentation 6-9
6.5.2. QC Documentation 6-9
6.5.3. Corrective Action and Assessment Reports 6-9
6.5.4. Verification Report and Verification Statement 6-11
6.6. TRAINING AND QUALIFICATIONS 6-12
6.7. HEALTH AND SAFETY 6-12

7.0 REFERENCES 7-1

APPENDICES

		Page
APPENDIX A	Example Test Data Output	A-1
APPENDIX B	Field Testing Log Forms	B-1
APPENDIX C	Instrument QA/QC Check Forms	C-1

LIST OF FIGURES

		Page
Figure 1-1	Turbogenerator Components	1-6
Figure 1-2	Typical Daily Power Consumption Profile	1-7
Figure 1-3	Project Organization	1-8
Figure 1-4	Verification Schedule	1-10
Figure 2-1	Electric Power Industry Fuel Mixes	2-8
Figure 2-2	Annual Operating Hours of PEPCO Power Generation Units	2-9
Figure 2-3	Monthly Trends By Fuel Types	2-10
Figure 2-4	Electricity Production Costs By Fuel Type	2-10
Figure 2-5	Determination of Power Factor	2-15
Figure 3-1	Schematic of Installation Setup	3-5
Figure 4-1	Fuel Measurement System	4-2
Figure 4-2	Gas Sampling and Analysis System	4-4
Figure 6-1	Data Acquisition System Diagram	6-1
Figure 6-2	Corrective Action Report	6-10

LIST OF TABLES

		Page
Table 1-1	Turbogenerator Physical and Electrical Specifications	1-5
Table 2-1	Permissible Variations in Power, Fuel, and Atmospheric Conditions	2-5
Table 2-2	Summary of Emissions Testing Methods	2-18
Table 2-3	Emission Rates for PEPCO Plants	2-20
Table 2-4	Emission Rates for Model Regions	2-21
Table 3-1	Data Quality Objectives	3-2
Table 3-2	Measurement Instrument Specifications and Data Quality Indicator Goals	3-3
Table 3-3	Summary of QA/QC Checks	3-7
Table 4-1	Summary of Emission Testing Methods	4-3
Table 6-1	Continuous Data to be Collected for Turbogenerator Evaluation	6-2

DISTRIBUTION LIST

U.S. EPA
David Kirchgessner
Nancy Adams

Honeywell Power Systems Inc.
Diane Wood

SRI
Stephen Piccot
Sushma Masemore
Bill Chatterton
Curt Phillips
Ashley Williamson

TRC Environmental
Mark Winter

UMCP – CEEE
Predrag Popovic

1.0 INTRODUCTION

1.1. BACKGROUND

The U.S. Environmental Protection Agency's Office of Research and Development (EPA-ORD) operates a program to facilitate the deployment of innovative technologies through performance verification and information dissemination. The goal of the Environmental Technology Verification (ETV) program is to further environmental protection by substantially accelerating the acceptance and use of improved and innovative environmental technologies. The ETV program is funded by Congress in response to the belief that there are many viable environmental technologies that are not being used for the lack of credible third-party performance data. With performance data developed under this program, technology buyers, financiers, and permitters in the United States and abroad will be better equipped to make informed decisions regarding environmental technology purchase and use.

The Greenhouse Gas Technology Verification Center (the Center) is one of 12 independent verification organizations operating under the ETV program. The Center is managed by EPA's partner verification organization, Southern Research Institute (SRI), and conducts verification testing of promising GHG mitigation and monitoring technologies. This Center's verification process consists of developing verification protocols, conducting field tests, collecting and interpreting field and other data, obtaining independent peer-review input, and reporting findings. Performance evaluations are conducted according to externally reviewed verification Test Plans and established protocols for quality assurance.

The Center is guided by volunteer groups of Stakeholders. These Stakeholders offer advice on specific technologies most appropriate for testing, help disseminate results, and review Test Plans and Verification Reports. The Center's Executive Stakeholder Group consists of national and international experts in the areas of climate science, and environmental policy, technology, and regulation. It also includes industry trade organizations, environmental technology finance groups, governmental organizations, and other interested groups. The Executive Stakeholder Group helps identify and select technology areas for verification. For example, the oil and gas industry was one of the first areas recommended by the Executive Stakeholder Group as having a need for high quality performance verification.

To pursue verification testing in the oil and gas industry, the Center established an Oil and Gas Industry Stakeholder Group. The group consists of representatives from the production, transmission, and storage sectors. It also includes technology vendors, technology service providers, environmental regulatory groups, and other government and non-government organizations. This group has voiced support for the Center's mission, identified a need for independent third-party verification, prioritized specific technologies for testing, and identified broadly acceptable verification strategies.

One technology of interest to the Oil and Gas Industry Stakeholders was the use of microturbines as a distributed energy source. Distributed generation refers to power generation equipment, typically ranging between 5 to 10,000 kilo-watts (kW). It provides electric power at a site closer to customers than central station generation. A distributed power unit can be connected directly to the customer or to a utility's transmission and distribution system. Examples of technologies available for distributed generation include turbine generators, internal combustion engine/generators, photovoltaics, wind turbines, fuel cells, and microturbines. Distributed generation technologies provide customers one of the following main services: stand by generation (i.e., emergency backup power), peak shaving capability (generation during

high demand periods), baseload generation (constant generation), or cogeneration (combined heat and power generation).

Two specific groups within the Oil and Gas Industry Stakeholder Group expressed interest in the microturbine technology: gas production/processing and gas transmission sectors. The gas production/processing industry representatives were interested in electricity generation at remote locations where on-site power may not be readily available. These operators identified using "off-gas" that is normally vented or flared from wellhead operations, dehydration processes, and repressurization activities to supply fuel to the microturbines. A successful implementation of microturbines at these sites has the potential to result in lower environmental emissions by avoiding venting or flaring unused gas. The Stakeholders were also interested in microturbines at natural gas transmission stations where on-site power production with microturbines can offset electricity purchased from a central power plant. A portion of the compressor station's high pressure natural gas would be used to provide baseload generation or peak shaving capability. Both industry groups were interested in electricity production performance, environmental emissions, operational performance, and economics of generating on-site power versus purchasing power from centrally located power plants.

Since the formation of the Oil and Gas Industry Stakeholder Group, a second industry stakeholder group has been established – the Electricity Generation Stakeholder Group. This group is also interested in performance verification of microturbines as a distributed source of energy. This Test Plan has been designed to answer key performance verification questions from these groups by independently testing the microturbine technology.

To pursue verification testing of microturbines, the Center placed formal announcements in the Commerce Business Daily and industry trade journals, and invited vendors of commercial products to participate in independent testing. Honeywell Power Systems Inc. committed to participate in an independent verification of their microturbine. The technology is referred to as the Parallon® 75 kW Turbogenerator (Turbogenerator). This technology is designed to produce electric power in stand-alone and grid-connected applications or isolated modes. When the unit is connected to the utility grid, it supplies electrical power to the facility where it is installed, or to the grid at large, during periods when its generation exceeds the needs of the facility. When configured to operate isolated, the Turbogenerator supplies electricity to specific equipment dedicated to consume the power generated. Examples of equipment supported with this configuration include emergency lighting, fans, and electrical motors.

The performance verification test of the Turbogenerator will be carried out at a distributed energy testing facility operated by the University of Maryland, College Park - Center for Environmental Energy Engineering (CEEE). Testing will begin in November and will be completed by December 31, 2000. The CEEE test facility examines distributed energy conversion systems for buildings in cooperation with private industry and government groups. The Turbogenerator is one of the first systems to be tested, and is currently in operation at the facility. It is connected to the University's electric grid system, and is providing a portion of the building's electricity requirements. The Center will be evaluating the Turbogenerator in this configuration, and the methodology for conducting the performance evaluation is described in this document. The Turbogenerator will be reconfigured in Spring 2001 to produce both heat and power as part of CEEE's Building Cooling, Heating, and Power Demonstration project. An addendum to this document will be issued if all parties, including the absorption chiller manufacturer, agree to independent testing of the co-generation system by the Center.

This document is the full Test/Quality Assurance Plan (Plan) for the current Turbogenerator configuration. It contains detailed rationale for the selection of verification parameters, verification approach, and Quality Assurance/Quality Control (QA/QC) procedures to be implemented. This Plan

will be, or has been, reviewed by Honeywell, the host site, three members of the Center's Stakeholder groups, and the U.S. EPA QA team. Once it has been reviewed and approved, it will meet the requirements of the Center's approved Quality Management Plan (QMP) and thereby satisfies the ETV QMP requirements and conforms with U.S. EPA's standard for environmental testing (E-4). This Plan has been prepared to guide implementation of the test and to document planned test operations for the purposes of review and audit. Once testing is completed, the Center will prepare a Verification Report and Statement, which will be first reviewed by Honeywell. Once all comments are addressed, the report will be peer-reviewed by the host site, Stakeholders, and U.S. EPA QA team. Once completed, the Center Director and the U.S. EPA Laboratory Director will sign the Verification Statement, and the final Report will be posted on the Web sites maintained by the Center and the ETV program.

The remaining discussion in this section lists the performance verification parameters, and describes the Turbogenerator technology and test facility. Section 2 describes the approach for verifying each parameter, and Section 3 identifies the data quality objectives and requirements. Section 4 lists the sampling procedures for collecting measurement data and QA/QC procedures for verifying instrument performance and operation. Section 6 discusses data collection, validation, corrective action, and reporting and auditing procedures.

1.2. PERFORMANCE VERIFICATION PARAMETERS

The CEEE test facility is housed in a building that consumes from 30 to 275 kilowatt (kW) of electricity, with a daily average of about 200 kW. The lowest demand for electricity occurs when the building is not fully occupied, typically after 6:00pm. The Turbogenerator is programmed to operate between 8:00am and 6:00pm each day, and to produce 75 kW power output. The unit typically remains down during low occupancy periods to avoid feeding the electricity back to the grid when a load is not present. The operating schedule experienced at the test facility will form the basis for reporting performance results for continuous testing of the Turbogenerator.

The verification test will "include periods of controlled testing," in which the Center will intentionally modulate the unit to operate at four loads: 50, 75, 90, and 100 percent of capacity. During the controlled tests simultaneous monitoring for electric power output, fuel consumption, ambient meteorological conditions, and exhaust emissions will be performed. Average electrical power output, energy conversion efficiency, and exhaust stack emission rates will be reported for each load factor. The controlled testing period for each load is expected to be 30 minutes in duration, and the entire controlled testing period will take about 2 days to complete. This operating has been identified by Honeywell as representative of "normal operating range" where the majority of all grid parallel applications (peak shaving, base load, co-generation) are marketed.

Following the controlled testing, daily performance of the Turbogenerator will be characterized as it cycles through a 50 kW output in the early morning hours to a daily peak of about 75 kW. The Center will continuously monitor and record electric power output, fuel consumption, ambient meteorological conditions, power quality output, and operational performance for a 6 week period. The Continuous test results will report total electrical energy generated, electricity offset from the grid, power quality, and operational availability for the verification period.

The specific verification factors associated with the controlled and continuous testing are listed below. Detailed descriptions of testing and analysis methods are not provided here, but are presented in Section 2.0.

Verification Factors

- Electric Power Output Performance
- Power Quality Performance
- GHG and Conventional Air Pollutant Emission Performance
- Operational Performance

It should be noted that verification testing will occur during winter months, and relatively cool air temperatures ranging between 20 to 70 ^{o}F are expected. As a result, the test is not expected to provide information related to the unit's response to higher ambient temperatures (i.e., greater than 90 ^{o}F). Operating microturbines at elevated temperatures can result in de-rating of these units, as efficiency levels decrease. In addition, as the unit attempts to operate at these lower efficiencies, it is likely that environmental emissions introduced to the atmosphere may also increase. The Center will make every effort to capture the unit performance at highest temperatures encountered during the test.

1.3. PARALLON 75 KW TURBOGENERATOR TECHNOLOGY DESCRIPTION

Large and medium scale gas fired turbines have been used to generate electricity since the 1950s. Recently they have become a preferred source of additional generation capacity because of their ability to be quickly deployed and provide electricity at the point of use. Technical and manufacturing developments have occurred in the last decade that have enabled the introduction of microturbines, with generation capacity ranging from 30 to 200 kW. The Turbogenerator represents a new generation of compact natural gas fired microturbine with the capability to produce approximately 75 kW of 3-phase electricity at 275 volts alternating current (VAC).

The Turbogenerator operates on natural gas at a fuel pressure ranging from 75 to 125 psig. An optional booster compressor is offered which allows natural gas to be pressurized at these operating conditions. Table 1-1 summarizes physical and electrical specifications supplied by Honeywell. The Turbogenerator is marketed both as an alternative electrical generation source and as a source of back-up power. The standard Turbogenerator comes from the factory outfitted with hardware to allow it to be grid connected to the grid. A stand-alone or isolated configuration requires an optional black start battery to provide starting current to the power system.

The Turbogenerator is comprised of three main sections: a compressor, a combustor, and a power generator. In the compressor section, compressed air is mixed with fuel, and this compressed fuel/air mixture is burned in the combustor under constant pressure conditions (Figure 1-1). The resulting hot gas is allowed to expand through the turbine section to perform work, rotating the turbine blades to turn a generator which produces electricity. The compressor is mounted on the same shaft as the electrical generator, and consists of only one rotating part. Because of the inverter based electronics that enable the generator to operate at high speeds and frequencies, the need for a gearbox and associated moving parts is eliminated. The high-speed rotating shaft is supported by air-foil bearings, and does not require lubrication, as compared to the oil-lubricated bearings used in other designs. The exhaust gas exits the turbine and enters the recuperator, which captures some of the energy and uses it to pre-heat the air entering the combustor, improving the efficiency of the system. The exhaust gas then exits the recuperator through a muffler with sufficient heat energy for co-generation applications, or alternatively, for release to the atmosphere.

Table 1-1. Turbogenerator Physical and Electrical Specifications (Source: Honeywell Power Systems Inc.)		
Dimensions	Width Length Height	48.0 in. 91.9 in. 93.4 in.
Weight	Standard Power System Black Start Battery (optional) Natural Gas Compressor (optional) 120/208 Auto Transformer	2,575 lb 270 lb 350 lb 222 lb
Electrical Inputs	Power (start-up) Communications	Utility Grid or Black Start Battery (optional) SCADA (optional)
Electrical Outputs	Power Communications	275 VAC, 50/60 Hz SCADA (optional)
External Transformers Available	US	120/240 VAC ±15% (Delta), 57 – 63 Hz
		277/480 VAC ±15% (Wye), 57 – 63 Hz
	Canada	346/600 VAC ±15% (Wye), 57 – 63 Hz
	Korea	220/380 VAC ±15% (Wye), 57 – 63 Hz
	China	220/380 VAC ±15% (Wye), 47 – 53 Hz
	Europe	230/400 VAC ±15% (Wye), 47 – 53 Hz
	India	239/415 VAC ±15% (Wye), 47 – 53 Hz
	Africa	300/520 VAC ±15% (Wye), 47 – 53 Hz
Inlet Air Required	Core Engine	1220 scfm
Fuel Pressure Required	W/o Natural Gas Compressor W/ Natural Gas Compressor (optional)	75 to 125 psig 15 to 30 psia
Fuel Flow Rate	Steady State (standard day)	42 lb/hr or 16 scfm

The permanent magnet generator produces high frequency alternating current which is rectified, inverted, and filtered by the line power unit into conditioned alternating current at 275 volts. This can be converted to the voltage level required by the facility using either an optional internal transformer (120/208 VAC) or external transformers (see Table 1-1 for complete listing) for distribution. The unit supplies a variable electrical frequency of 50 or 60 Hertz (Hz). The Turbogenerator is supplied with a control system which allows for automatic and unattended operation. All operations, including start-up, synchronization with the grid, dispatch, and shutdown, can be performed manually or remotely using an optional Supervisory Control and Data Acquisition (SCADA) system.

Installation requires a suitable location and connection to a natural gas input and electrical power output. For a typical grid interconnected installation, the Turbogenerator requires: a firm, level base (concrete pad, steel rails, or other suitable supports) in a dry area with good air circulation and room for maintenance access. The Turbogenerator is anchored to the base consistent with local codes, and connected to a natural gas supply line with an external shutoff valve. If the internal transformer is used, the power output can be connected to the main circuit breaker at the facility. Otherwise, the power output is connected to an external transformer (supplied by Honeywell as optional equipment) which is then connected to the facility's power system. All installation procedures must be performed in accordance with applicable local and national codes.

Figure 1-1. Turbogenerator Components (Inverter Not Shown)

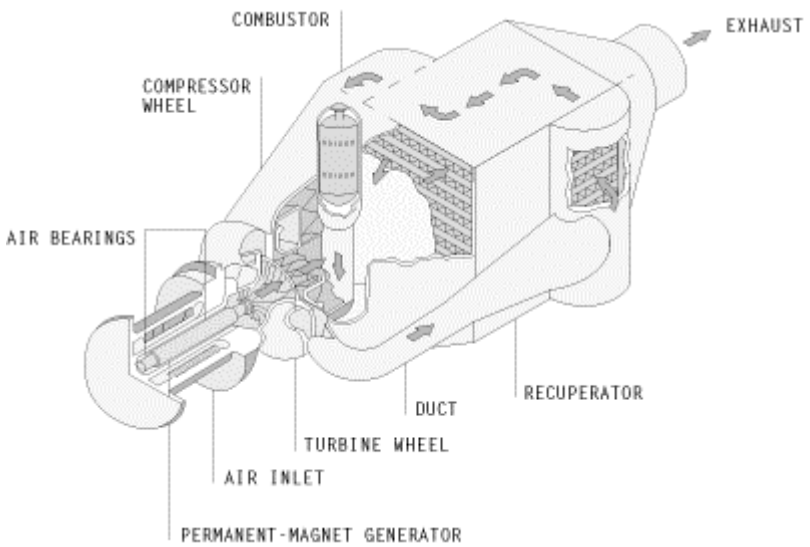

In December 2000, Honeywell plans to introduce an option that will allow grid parallel load following such that an operator will not have to be present to ensure the output of the unit will not exceed the building load during the early or latter part of the peak shaving period. This option requires an external electric meter and a SCADA. The output of the unit will automatically be adjusted such that it will not exceed the output of the building load.

1.4. TEST FACILITY DESCRIPTION

The CEEE test facility consists of a 55,000 ft^2 building that has been converted into a BCHP research and demonstration facility. It has been developed to optimize the integration of distributed generation technologies and to demonstrate the benefits and implementation issues to the engineering community, equipment manufacturers, and building owners. BCHP projects are executed in collaboration with the U.S. Department of Energy, Oak Ridge National Laboratory, and industry partners such as the ATS Engineering, Broad, Baltimore Gas and Electric, PEPCO, Washington Gas, and the Electric Power Research Institute. Installation and operation of the Honeywell Turbogenerator is one of the first series of distributed generation projects undertaken by the CEEE. Future demonstrations will investigate the integration of microturbines and fuel cells with an absorption chiller and a desiccant system. The integrated projects will examine energy efficiency from electricity production and heat utilization, indoor air quality, and control systems.

The Turbogenerator is installed to reduce the electrical consumption at the test facility. The facility has a peak electrical load of approximately 275 kW, with major electricity consumed (65 to 75 percent) by HVAC equipment, while the rest is used for lighting, convenient outlets, office, machines, and other.

Figure 1-2 illustrates a daily profile of the electricity consumed at the facility. The highest electricity consumption occurs when the building is fully occupied, between 8:00am and 6:00pm. During these periods, the Turbogenerator operates at full capacity, and generates about 75 kW. Any electrical needs in excess of the capacity of the unit is automatically supplied by the grid. During hours surrounding the building operating periods, the Turbogenerator remains down or operates at partial loads (producing between 30 and 60 kW). The decision to operate at these conditions is determined by considering the time of day and the availability of an operator to ensure that electricity produced does not exceed the consumption rate.

Figure 1-2. Typical Daily Power Consumption Profile

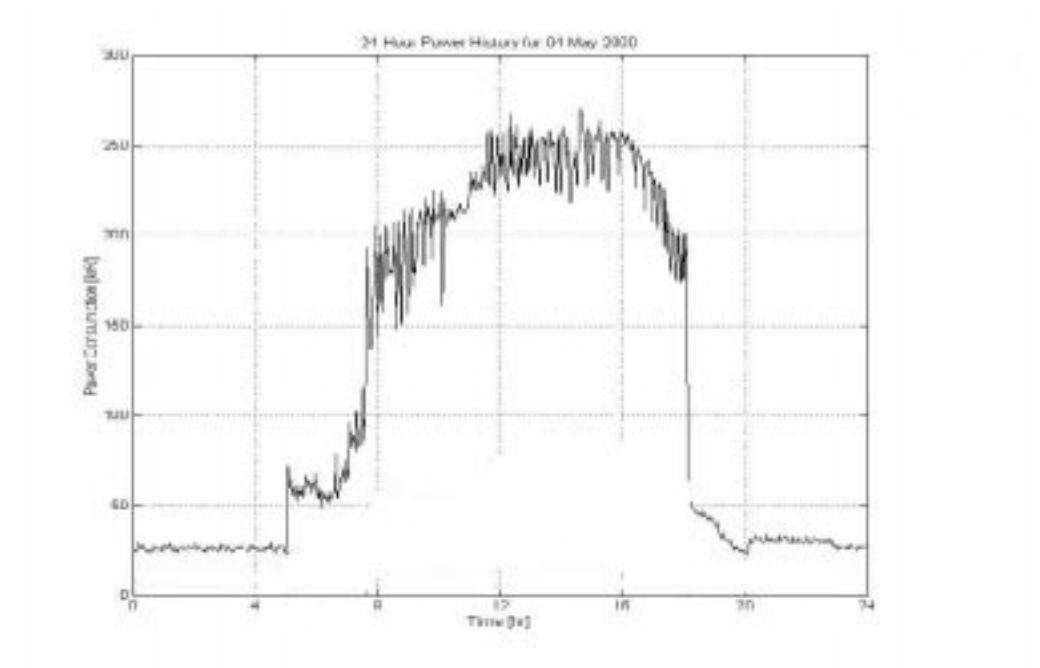

The Turbogenerator has been configured specifically for use at the test facility. The turbogenerator and the transformer are located outside of the building on concrete padding. The unit is connected in parallel with the utility grid, so that its electricity generation will directly reduce the amount of electricity that the facility must purchase from a local utility. Because it was connected in parallel with the grid, the optional starting battery was not required. Natural gas is supplied at 2 psig fuel pressure, which is within the 15 to 30 psia (Table 1-1) fuel pressure requirements with an optional booster compressor. The booster compressor will increase the gas presure to a range between 75 and 125 psig, and will be fed to the turbine for combustion. The compressor is powered directly by the 275 VAC primary output from the generator. An external transformer is added to convert the 275 VAC output from the Turbogenerator inverters to the 480 volt AC required by the facility. To facilitate the analysis and optimization of the Turbogenerator operation, the optional SCADA system has also been installed.

The Turbogenerator's performance will be monitored using a dedicated PC type desktop computer where the data from continuously monitored verification meters will be collected and compiled. These data and the Turbine operating data, continuously logged by the SCADA system, will be downloaded and analyzed on a biweekly basis. The data will also be accessible through the facility's network so that the data will be

readily available to facility personnel for operational purposes. Further discussion of measurement instruments and data acquisition, validation, and retrieval activities are provided in Sections 3 and 4.

1.5. ORGANIZATION

The project team organization chart is presented in Figure 1-3. A discussion of the functions, responsibilities, and lines of communication between the organizations and individuals associated with this verification test is provided below.

Figure 1-3. Project Organization

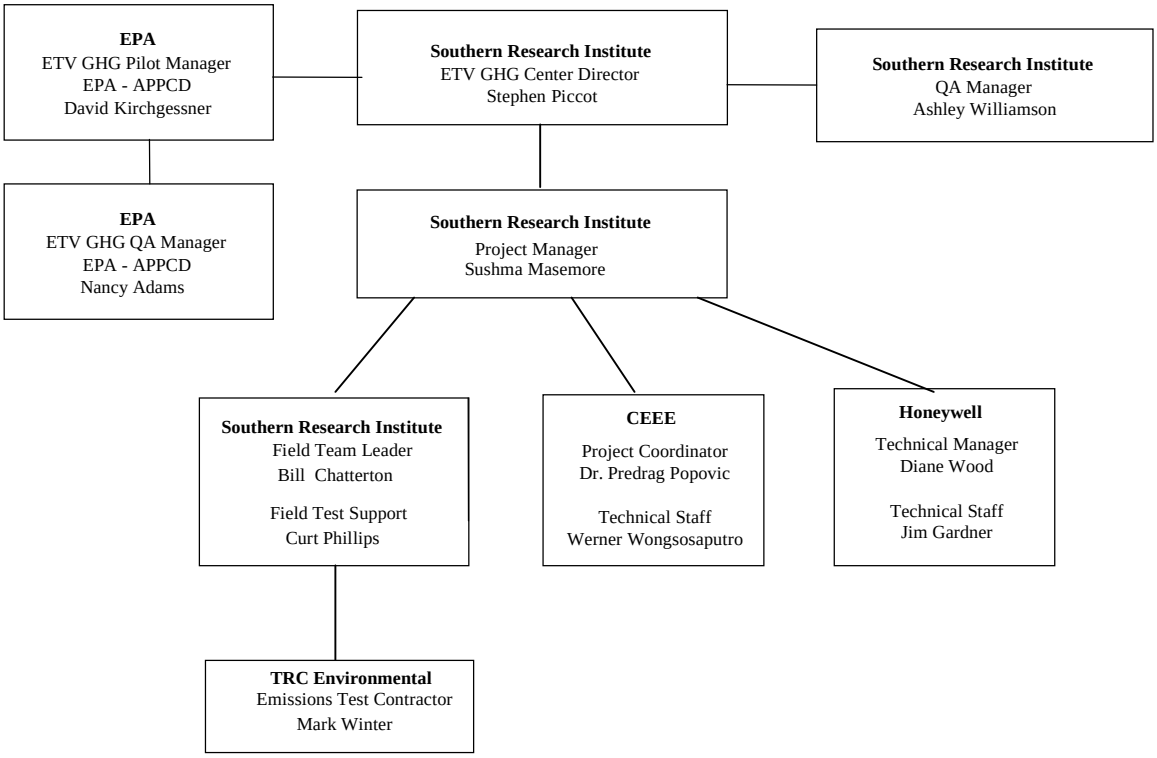

Southern Research Institute's Greenhouse Gas Technology Verification Center has overall responsibly for planning and ensuring the successful implementation of this verification test. The Center's Ms. Sushma Masemore will have the overall responsibility as the project manager. She will be responsible for quality assurance at the test site, including determination of DQOs prior to the completion of the test. Ms. Masemore will follow the procedures outlined in Section 3.0 to make this determination, and will have fully authority to repeat tests as determined necessary. Should a situation arise during the test that could affect the health or safety of any personnel, Ms. Masemore will have full authority to suspend testing. Ms. Masemore will be responsible for maintaining communication with Honeywell, EPA, and CEEE.

Mr. Bill Chatterton will serve as the Field Team Leader, and will support Ms. Masemore's data quality determination activities. Mr. Chatterton will provide field support related to all measurements data

collected, including fuel measurements, emissions testing, and efficiency determination. Mr. Chatterton has over 16 years experience in environmental testing with emphasis on emissions testing, flow measurements, field verifications, and project management. He will manage the TRC Environmental emissions testing crew and ensure that QA/QC procedures outlined in Section 5.0 are followed. Mr. Mark Winter will be the field project leader for TRC. Mr. Winter has over 10 years experience in emissions testing, with emphasis on determination of gaseous pollutants from combustion sources. Mr. Curt Phillips will assist Mr. Chatterton in the field, and will be responsible for ensuring that performance data, collected by continuously monitored instruments, are based on procedures described in Section 6.0 for data collection, storage, and retrieval practices. He will also coordinate with CEEE to ensure that the daily data stored by the DAS are being submitted to the Center's RTP office.

CEEE will provide the Turbogenerator system where all testing will be conducted. CEEE technicians will operate the Turbogenerator, maintain manual operations log, and submit data recorded by the DAS. CEEE will be available on-site to perform instrument checks if the Center determines data collected by measurements instruments are suspect. Mr. Predrag Popovic will have the full authority over the activities performed by CEEE technicians, and will coordinate with Ms. Masemore throughout the test.

The Center's Quality Assurance Manager, Mr. Ashley Williamson, will review and approve the Test Plan, and test results from the verification test. He will conduct an internal Technical Systems audit, Performance Evaluation Audit, and an Audit of Data Quality, as required in the Center's QMP. Further discussion of these audits is provided in Section 6.3. Results of the internal audits and corrective actions taken will be reported to Mr. Steve Piccot, the Center Director, and included in the final Verification Report.

EPA's APPCD is the sponsor of this ETV GHG Center, and is providing broad oversight and QA support for this verification. The EPA Pilot Manager, David Kirchgessner, is responsible for obtaining final approval of project Test Plan and reports. EPA QA Manger reviews and approves the Test Plan and final reports. The EPQ QA Manager has the authority to conduct an external audit of this verification.

Honeywell and the Center have signed a formal agreement specifying details of financial, technical, and managerial responsibilities. These details are not repeated here. Honeywell may participate as an observer during testing, but will not collect any verification data.

1.6. SCHEDULE OF ACTIVITIES

Figure 1-4 presents the schedule of activities for verification testing of the Turbogenerator. A site survey visit has already been completed. Field testing is scheduled to begin in November 2000. Although not expected, delays may occur for various reasons, including mechanical failures at the site, weather, permitting, and operational issues. Should significant delays occur, the schedule will be updated and all participants will be notified.

Figure 1-4. Verification Schedule

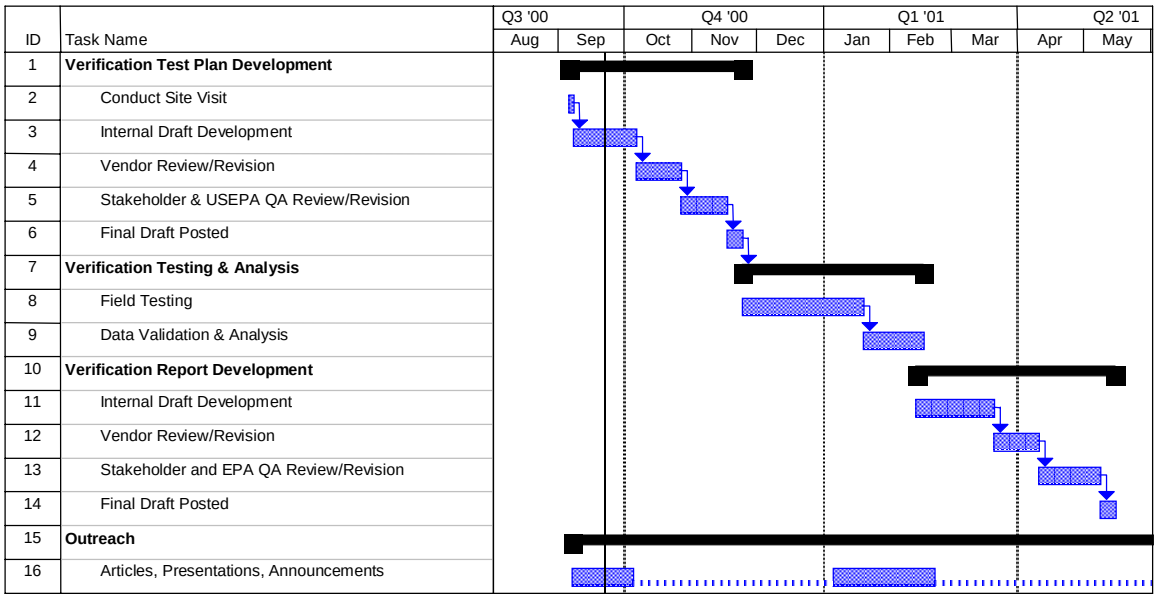

2.0 VERIFICATION APPROACH

2.1. OVERVIEW OF THE VERIFICATION STRATEGY

Microturbines are a relatively new technology, and the availability of performance data is limited and in great demand. The Center's Stakeholder groups, and other organizations with interests in distributed generation, have a specific interest in obtaining verified field data on the emissions, and technical and operational performance of microturbine systems. Performance parameters of greatest interest include electrical power output and quality, thermal-to-electrical energy conversion efficiency, exhaust emissions of conventional pollutants and greenhouse gases (GHG), GHG emission reductions, operational availability, maintenance requirements, and economic performance. The test approach described here focuses on assessing those performance parameters of significant interest to potential future customers of microturbines. As a practical matter, long-term evaluations cannot be performed, and economic performance and maintenance requirements are not evaluated.

In developing the verification strategy, the Center has applied existing standards for large gas fired turbines, engineering judgement, and technical input from industry experts. Performance testing guidelines listed in the American Society of Mechanical Engineers (ASME) - Performance Test Code for Gas Turbines (PTC22-1997) have been adopted to evaluate electric power production and energy conversion efficiency performance. Some variations in the PTC22 requirements were made to reflect the small scale of the microturbine. Exhaust stack emissions testing procedures, described in U.S. EPA's New Source Performance Standards (NSPS) for emissions from stationary gas turbines (40CFR60, Subpart GG), have also been adopted for greenhouse gas and criteria pollutant emissions testing. Power quality standards used in this verification are based on the Institute of Electrical and Electronics Engineers' Recommended Practices and Requirements for Harmonic Control in Electrical Power Systems (IEEE 519).

CEEE personnel will determine the Turbogenerator operating schedule and load factors by considering daily power needs of the facility. It is anticipated the unit will operate at full load (75 kW) during periods of full occupancy (8:00am to 6:00pm). On occasion, the unit may operate at partial loads (greater than 30 kW), particularly during early morning hours, but the exact operating schedule will be determined by site operators. Continuous monitoring of actual electrical power delivered, fuel consumed, power quality parameters, ambient conditions, and other operational parameters will be performed throughout the 6 week test period. The 6 week monitoring perios was selected to accomodate several days of emissions/load testing and enable a reasonable data capture of diffeent daily electricity demands of the site. The time series performance data will be analyzed to report net electricity generated, the variability observed in power output with ambient conditions, the quality of power generated, and the unit's ability to synchronize with the utility grid.

In addition to continuous testing, a scheduled controlled test will be performed to evaluate the Turbogenerator's performance at four selected loads within the normal operating range of the unit. During these controlled tests, simultaneous monitoring for electric power output, fuel consumption, ambient meteorological conditions, and exhaust emissions will be performed. These data will be used to compute the average electrical power output, energy conversion efficiency, and exhaust stack emission rates at each load condition. The controlled testing period at each load is expected to be 30 minutes in duration, and will be repeated 3 times. The triplicate measurements design is based on U.S. EPA NSPS guidelines for stationary gas turbines. The four operating loads at which testing will be conducted is

simply an incremental breakdown of the loads at which peak shaving power generation applications exist, and is within the normal operating range specified by the manufacturer.

The controlled and continuous tests will address the following verification factors.

- Power Production Performance
- Power Quality Performance
- GHG and Conventional Air Pollutant Emission Performance
- Operational Performance

Following is a brief discussion of each verification factor and their method of determination. Detailed descriptions of testing and analyses methods are provided sequentially in Sections 2.2 through 2.5.

Power Production Performance

Power production performance is a microturbine operating characteristic that is of great interest to purchasers, operators, and users of electricity generating systems. Key parameters that will be characterized include:

- Electrical power output and efficiency at selected loads
- Total electrical energy generated
- Electricity offset from the grid

Determinations of the above listed parameters will be based upon guidelines listed in ASME PTC22. The electrical power output (kW) will be measured with a 7600 ION Power Meter (Power Measurements Ltd.). Fuel input will be determined using a mass flow meter to monitor the natural gas flow rate. Fuel gas energy content analysis (via gas chromotragraph) will be conducted to determine the lower heating value of the fuel. Ambient temperature, relative humidity, and pressure will be measured throughout the verification period to support determination of electrical conversion efficiency as required in PTC22. The continuously logged kW readings will be integrated over the duration of the verification period to calculate the total electrical energy generated (kWh), or any sub-period thereof. Energy to electricity conversion efficiency will be determined by dividing the electrical energy output by the energy input. Electricity offset from the grid will be computed as the electricity displaced from a local utility that normally supplies electricity to the site. This will be computed as the sum of electricity generated and estimates of electricity transmission and distribution line losses. Detailed verification approach for power production performance parameters is provided in Section 2.2.

Power Quality Performance

The monitoring and determination of power quality performance is required to insure compatibility with the electrical grid, and to demonstrate that the electricity will not interfere with or harm microelectronics and other sensitive electronic equipment within the facility. Power quality data is used to report "exceptions", which are the number and magnitude of incidents that fail to meet or exceed a power quality standard chosen. The Institute of Electrical and Electronics Engineers' Recommended Practices and Requirements for Harmonic Control in Electrical Power Systems (IEEE 519) contains standards for power quality measurements that will be followed here. Power quality parameters will be determined over the 6 week verification period using the 7600 ION. The approach for verifying these parameters is described in Section 2.3. Power quality variables to be examined include the parameters listed below.

- Electrical frequency
- Voltage transients
- Voltage and current total harmonic distortion
- Power factor

Operational Performance

The Turbogenerator will be operated as a "peak shaver", and started and secured each day. The unit's ability to produce power when called upon will be documented with the following performance parameters.

- Cold start time
- Number of successful and unsuccessful starts
- Operational availability
- Safety shutdown capability

Turbogenerator start time is useful in knowing the time required to achieve full power when emergency backup power is needed or when electrical power is needed during peak demand periods. Cold start time represents the number of seconds required to obtain full power after a start command is sent to the unit. It will be verified after a minimum of 8 hours of complete shutdown has occurred (typically during each morning). The Turbogenerator will be specified to operate at full capacity, and the average duration of start times for each day will be used to report cold start time. The data will also be used to determine the number of successful starts achieved for each start opportunity provided.

Turbogenerator availability represents the percentage of time the unit is available to serve the load when called upon. Turbogenerator availability accounts for unscheduled downtimes due to failures of the unit, and is defined as the percentage of time the unit was operating relative to the total available operating hours. The Center recognizes the operational availability will be based on the test period only, and will not represent the unit's performance over long operating periods. Although it is not feasible to conduct multi-year tests that would be required to estimate the unit's long-term performance, it is believed the test period data will provide useful information for customers considering this technology.

Emissions Performance

The measurement of the emissions performance of the microturbine system is critical to the determination of the environmental impact of the technology. Emission rate measurements for nitrogen oxides (NO_x), carbon monoxide (CO), volatile organic compounds (VOC), carbon dioxide (CO_2), and methane (CH_4) will be collected in the turbine exhaust stack over a 2 day-long controlled test. Exhaust stack emissions testing procedures, described in U.S. EPA's NSPS for stationary gas turbines will be adapted to verify the following verification parameters at each load.

- NO_x Emission Rates
- CO Emission Rates
- VOC Emission Rates
- CO_2 and CH_4 Emission Rates
- Annual GHG and NO_x emission reductions

For the conventional pollutants listed above, emission rates (e.g., mass/hour, mass/heat input, and mass/power output) will be determined and reported. CO_2 and CH_4 emission rates will also be determined in the exhaust stack. Though not expectd, the potential exists that seal leaks can occur at the internal

booster compressor where natural gas is pressurized to meet Turbogenerator's fuel specifications. Manual checks for the presence of methane leaks will be determined, and significant leaks will be quantified using U.S. EPA protocol tent/bag method. Total methane emission rate will be determined as the sum of stack emissions and methane leak rates at the compressor.

Using measured GHG emission rates and projections of annual operating hours, the total annual GHG and NO_x emissions from the system will be estimated. Extrapolation and other assumptions used will be fully documented in the final report, allowing readers to make alternate assumptions and assessments if they wish. The annual emissions will be compared with "baseline" emission levels. To accomplish this, it will be assumed that electrical power supplied by the Turbogenerator is supplied by local energy sources (i.e., local power stations that would actually provide service to the test facility.). Subtraction of the annual microturbine emissions from the baseline emissions will yield an estimate of the emission reduction for the facility.

Different locations across the US will experience emission reductions that could vary significantly depending on the mix of local power supplies (i.e., coal vs. hydropower) and other factors. To address the effect of alternate fuel sources, annual emissions will be estimated for model regions which represent a diversity in electricity production in the country. Emission reductions for these model regions will be determined as described above. The procedures and guidelines used to accomplish this will be sufficiently transparent to allow individuals not located in the area of the "model sites" to calculate their own GHG emission reduction. Section 2.5 describes the sampling and analytical approach for verifying emissions performance.

2.2. POWER PRODUCTION PERFORMANCE

Power production performance evaluation will report electrical power output and efficiency at selected loads, total electric energy generated, and electricity offset from the grid. The approach for determining these parameters is discussed below.

2.2.1. Electrical Power Output and Efficiency at Selected Loads

The Turbogenerator load will be modulated to 50, 75, 90, and 100 percent of its rated capacity (75 kW). Electrical power output will be determined with the use of the 7600 ION that monitors and records instantaneous power output at the start of each minute. The electric meter will be installed between the 480 volt transformer and the utility grid (Figure 1-3). Fuel consumption rates will be measured using mass flow meters. Gas samples will be extracted at each load condition, and analyzed on site to determine the heating value of the fuel. The time synchronized measurements data will be used to compute average electrical power output and efficiency.

For determining electrical efficiency, the PTC22 mandates using electric power data collected over time intervals of not less than 4 minutes and not greater than 30 minutes (PTC22, Section 3.4.3 and 4.12.3). This restriction minimizes the uncertainty in electrical efficiency determination due to varying changes in operating conditions. The maximum permissible variations in power output, power factor, fuel input, and atmospheric conditions are shown in Table 2-1.

Table 2-1. Permissible Variations in Power, Fuel, and Atmospheric Conditions	
Measured Parameter	**Maximum Permissible Variation**
Power output	± 2 %
Power factor	± 2 %
Fuel flow	± 1 %
Barometric pressure	± 0.5 %
Ambient air temperature	± 4 °F

Continuous monitoring for these measurements will be conducted throughout the verification period to ensure the above criteria are satisfied. Should the variation in power output, ambient pressure, or temperature exceed the required levels, the controlled test will be considered invalid and the test will be repeated.

Electrical efficiency at the selected loads will be computed as shown in Equation 1 (per ASME PTC22, Section 5.3).

$$\eta = \frac{3412.14\ kW}{HI} \tag{1}$$

$where:$

$\eta = efficiency\ (\%)$

$kW = \ average\ electrical\ \ power\ output, Eqn.2\ (kW)$

$HI = average\ heat\ input\ using\ \ LHV, Eqn.3\ (Btu/hr)$

Average electrical power output will be computed as the mathematical average of the one-minute instantaneous readings over the sampling period (4 to 30 minutes), as shown in Equation 2.

$$kW = \frac{\sum_{i=1}^{i=nr} kWi}{nr} \tag{2}$$

$where:$

$kW = \ average\ electrical\ \ power\ output\ (kW)$

$kWi = instantaneous\ reading\ of\ \ the\ kW\ \ sensor\ at\ each\ minute\ (kW)$

$nr = number\ of\ \ one\ minute\ readings\ logged\ by\ the\ kW\ \ sensor$

The average heat input will be determined using data collected with a mass flow meter and a gas chromatograph. The flow meter will be installed in the fuel supply line of the Turbogenerator, and will be programmed to continuously monitor and record one-minute flow readings. The heating value of the natural gas is not expected to vary greatly at the site. Fuel gas samples will be collected at a frequency of one extraction per load condition, and is considered to be adequate for determining efficiency. The Center will obtain multiple gas samples prior to testing to determine the variability in heating values over 30 minute sampling intervals. If the variability is greater than 1 percent as specified in PTCC22, the sample frequency during controlled testing will be increased. The gas samples will be shipped to a certified laboratory for compositional analysis in accordance with ASTM Specification D1945, and lower heating value (LHV) determination using ASTM Specification D3588. Using the fuel flow rate data and the LHV results, average heat input will be computed as shown in Equation 3.

$$HI = 60\, F_m\, LHV \qquad (3)$$

where:

HI = *average heat input using LHV (Btu/hr)*

F_m = *average mass flow rate of natural gas to turbine (lbm/min)*

LHV = *average LHV of natural gas (Btu/lbm)*

Electrical Efficiency Without The Booster Compressor

Because the natural gas at the test facility is supplied at 2 psig, the Turbogenerator was supplied with an internal electrical gas compressor to boost the supplied gas to a minimum pressure of 75 psig. This internal electrical compressor is powered prior to the output transformer, directly from the 275V primary output from the generator. Consequently, the efficiency determinations described above account for energy consumed by the booster compressor.

To make the results of this test applicable to installations where high pressure gas is available (e.g., gas transmission compressor stations), it is necessary to measure the power consumed by the electrical gas compressor. This will enable efficiency and gross power output of the microturbine to be computed independent of the gas compressor. In addition, it will enable readers to examine the Turbogenerator efficiency ratings on the same basis as the ratings that are reported for similar technologies.

To measure the power requirements of the internal compressor, a separate meter will be placed inside the Turbogenerator enclosure where the electrical motor powering the compressor is located. The power consumed (kW) will be monitored at the same sampling rate as the power delivered by the unit (one reading per minute). The sum of the readings from the two power meters will represent the gross power output without the booster compressor (Equation 4). Power consumed by the booster compressor will be corrected for transformer losses due to electrical power conversion from 275 volts to 480 volts. Based on the *American Electricians' Handbook* (Twelfth Edition, pp 5-36 & 5-37), the average efficiency through a transformer in this application is expected to be 98 percent or better. Using the gross power output readings, electrical efficiency will be calculated in the same manner as shown in Equation 1.

$$\text{Gross Power Output (kW)} = kW + (kW_{comp} * TE) \qquad (4)$$

where :

kW = *power output of the generator as measured after the transformer (kW)*

kW_{comp} = *power consumed by the gas booster compressor (kW)*

TE = *transformer efficiency (98 %)*

Power Output Corrections for Standard Conditions:

The above calculations reflect power output and efficiency results at actual site conditions (i.e., temperature, pressure, and relative humidity observed during testing). For assessing the performance of this technology in different geographic regions, it is useful to correct the actual test data to rated or standard conditions. A standard temperature of 60 ^{o}F, barometric pressure of 14.7 psia, and a relative humidity of 60 percent, as defined by the International Standards Organization (ISO 2314: 1989), is often used to correct for standard conditions.

Since it is unlikely ISO conditions will be encountered during the verification, directly verified performance results will not be obtainable at standard conditions. For readers interested in such data, Honeywell will apply manufacturer developed performance curves to report the corrected power outputs. This data will be presented in a separate section of the final report, and the reader will be advised that the results have not been verified by the Center.

2.2.2. Total Electrical Energy Generated

After the controlled testing at selected loads, the Turbogenerator will be operated at full load for the remainder of the test period. The electrical power output will be continuously monitored and recorded throughout this period at a sampling rate of one measurement every 2 minutes. The measurement frequency is increased to accommodate the frequency of existing measurement instruments at the site. Continuous monitoring of ambient meteorological conditions and gas flow rate will also be performed. Time series plot of power output will be prepared, and analyzed to determine total electricity generated. Measurement periods corresponding to the controlled tests, and unscheduled downtimes unrelated to the Turbogenerator (i.e., intentional shutdowns by site operators) will be excluded from this analysis. Total electricity generated will be computed from the measured power output and the operating time (Equation 5), and will be reported in units of kilowatt-hours (kWh).

$$Total\ Electrical\ Energy\ Generated\ \ (kWh) = \sum_{i-1}^{i=nr} kWi\ Time_i \qquad (5)$$

$$\begin{aligned}
&where: \\
&kWi = instantaneous\ reading\ of\ the\ kW\ sensor\ every\ 2\ minutes\ (kW) \\
&Time_i = sampling\ interval\ (min) \\
&nr = number\ of\ two\ minute\ readings\ logged\ by\ the\ kW\ sensor
\end{aligned}$$

It is recognized that variations in ambient meteorological conditions, specifically temperature, pressure, and relative humidity, can significantly affect a gas turbine's ability to produce power. The electrical energy computation discussed above represent the combined effects of changes in such conditions, and does not provide insight on the Turbogenerator's performance during specific ambient conditions. A review of average meteorological conditions near the test facility suggests that an average temperature of about 45 ^{o}F (range of 18 to 76 ^{o}F) is expected during the test period. Relative humidity ranges from 20 to 100 percent, with an average value of about 60 percent. The barometric pressure remains relatively constant at about 30 inches Hg. Appendix A-1 summarizes the minimum, maximum, and average meteorological data for November, December, and January.

Throughout verification testing, continuous measurements for temperature, pressure, and relative humidity will be collected. The ambient monitors will be located in a close vicinity to the Turbogenerator inlet air area, such that the true condition of the combustion air can be determined. The time series meteorological data will be examined with corresponding power output data to identify potential trends in the data. Specifically, the data will be reviewed to determine if significant increases or decreases in electrical power output occur at specific temperature, pressure, and relative humidity ranges.

Significant variations in fuel pressure or gas quality are not expected during the test because the fuel source is based on a relatively consistent natural gas supply. However, continuous monitoring for fuel pressure, fuel temperature, and fuel flow rate will be maintained to ensure that fuel inlet conditions have not changed and resulted in variations in electrical power output. In addition, gas samples will be collected periodically to ensure the heating value has not changed.

2.2.3. Electricity Offset From the Grid

The power generated by the Turbogenerator will offset the electricity supplied by an electric utility. Identifying a specific power plant that experiences a displacement in electricity as a result of the electricity produced by the Turbogenerator is not possible. This is because the energy supplied by a utility has a potential to originate from the supplier's own power plants or from any number of over thousands of electric power plants in the country. To overcome this limitation, two assumptions are made.

First, it is assumed the utility operator that supplies the electricity to the end-user will experience a reduction in electricity demand as a new distributed source of energy comes on line. Potomac Electric Power Company (PEPCO) is the local power company that supplies the electricity to the test area. PEPCO power plants will serve as the baseline against which electricity offsets will be determined. Figure 2-1 shows the percentage of electricity produced from coal, oil (petroleum), and natural gas-fired units operated by PEPCO. Coal represents about 84 percent of the total generation, which is higher than the national average. Oil and natural gas fired power plants comprise the remaining portion of fuel consumed (Figure 2-1).

Figure 2-1. Electric Power Industry Fuel Mixes

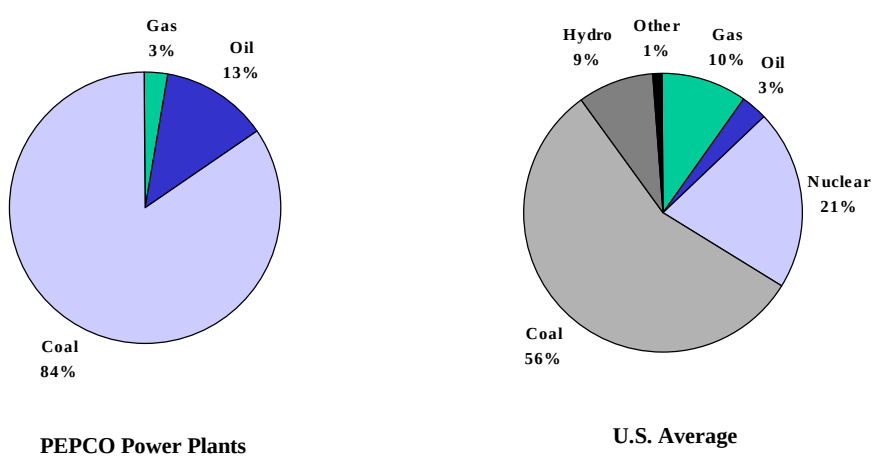

The second assumption identifies specific power generation plant(s) and fuel types that are likely to experience a displacement in electricity production. Typically, a utility operator will dispatch specific generation units or power plants as electricity demands vary with the time of day and season. Depending upon availability, the plant that produces power at the lowest cost will usually be dispatched first, and the plant that produces power at the highest cost will be dispatched last (DOE 1994). To determine which power plants serve these roles, the annual operating hours for 7 PEPCO power plants and their 22 power generation units were processed using U.S. EPA's Emissions and Generation Resource Integrated Database (EGRID), Energy Information Administration's Annual Utility Plant Operations and Design Database -Form 767 (EPA 2000 and EIA 2000), and Federal Energy Regulatory Commission's Electric Utility Annual Report - Form 1 (EPA 2000, EIA 2000a, and FERC 2000).

Based on 1998 production data available in the EPA, EIA, and FERC databases, coal and coal/oil generation units operated more than 80 percent of the total available hours in a year (Figure 2-2). In contrast, oil and gas/oil fired units logged the least hours. Based on this, it is assumed that coal and oil and dual fired gas/oil units serve the fluctuating electricity requirements. This assumption is validated by monthly trends observed for PEPCO power plants and average electricity production costs reported for each fuel type, as shown in Figures 2-3 and 2-4.

Figure 2-2. Annual Operating Hours of PEPCO Power Generation Units

(Source: EPA EGRID database)

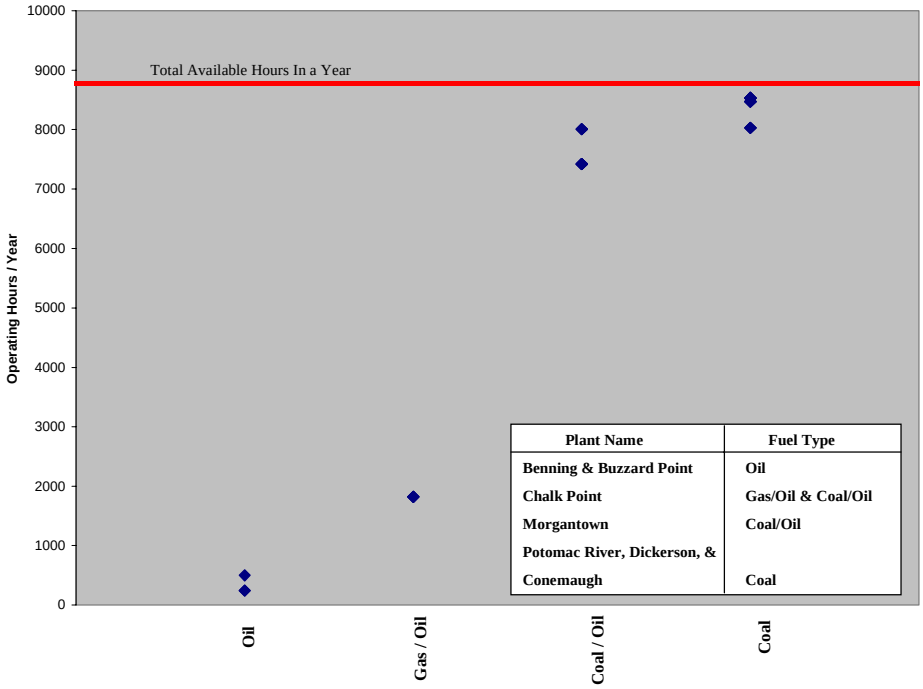

Figure 2-3 shows that over 40 percent of monthly electricity generation is supplied by coal fired units on a continuous basis, while dual fired gas/oil units were operating to meet the monthly electricity demand changes. In contrast, oil fired units were brought into service only during the peak demand periods in summer. Figure 2-4 illustrates production costs per unit of kWh produced by each fuel type. These data were obtained from FERC Form 1 and accounts for plant costs (land, structures, improvements, and equipment), production costs (operation, supervision, engineering, fuel, steam, electric), and maintenance costs (supervision, engineering, structures, boiler plant, electric plant). The cost for producing electricity with oil is highest, ranging between $0.0523 to $0.0767 per kWh, followed by dual fired gas/oil units at a rate of $0.035 per kWh. In contrast, the production costs using coal is the lowest, ranging between

$0.0149 to $0.0259 per kWh. The results of Figure 2-3 and 2-4 suggest that oil fired units are most expensive to operate, and thus are operating only during peak seasons. However, on an annual basis, dual fired gas/oil units are likely to experience a displacement in electricity production, as alternate power generation sources become available. In conclusion, the electricity produced by the Turbogenerator at the test site is assigned to displace electricity produced by gas/oil fired units.

Figure 2-3. Monthly Trends By Fuel Types

(Source: EPA EGRID database, EIA Form 767)

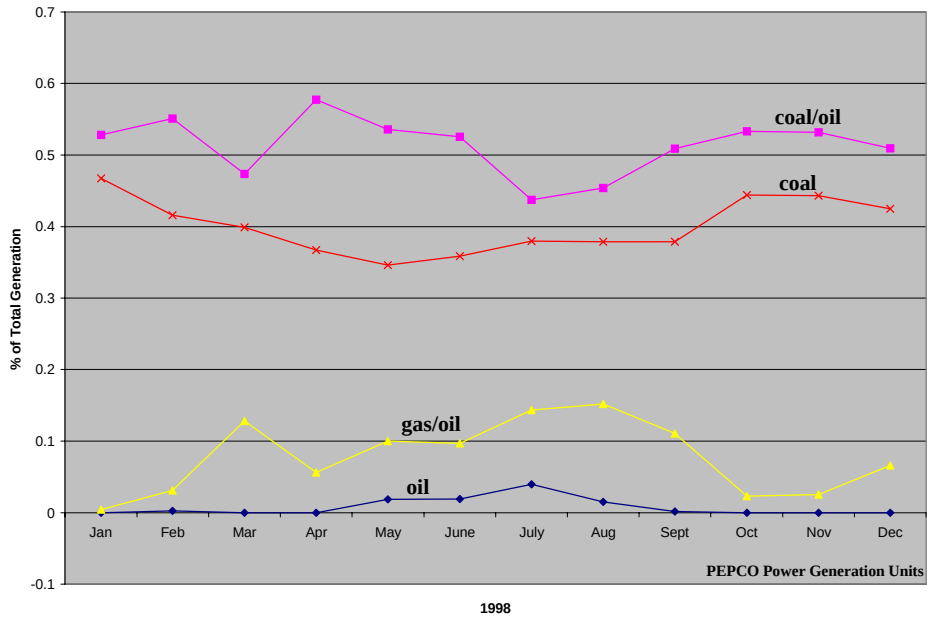

Figure 2-4. Electricity Production Costs By Fuel Type

(Source: FERC Form 1)

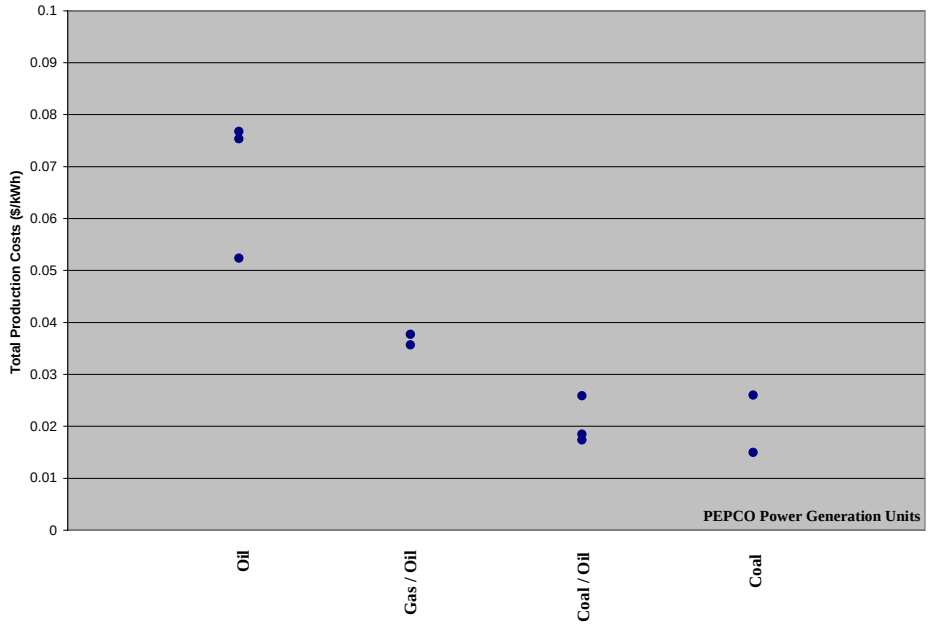

2.2.3.1. Transmission and Distribution Line Losses

The electricity generated by the baseline power plants is delivered through electrical transmission and distribution system. Electric energy losses in transformers, transmission wires, distribution wires, and other equipment are incurred as the electricity is distributed from the power plant to the end-user. Transmission lines and distribution lines are categorized by their voltage rating. Transmission lines operate at the highest voltage (generally defined as 115 kV to 765 kV), and carry electric energy from the power plants to the distribution system. Distribution systems operate at less than 69 kV and carry the electricity to the residential, commercial, and industrial customers. Power transformers are used to increase the voltage of the produced power from the generation voltage to transmission voltage, and in distribution substations to reduce the voltage of the power delivered to the distribution system. These system losses must be considered in calculating the true electricity savings and emission offset from the Turbogenerator.

To identify transmission and distribution losses, the "Annual Electric Utility Report, Form EIA-861", published by the US Department of Energy, Energy Information Administration was used (EIA 2000b). Form EIA-861, completed by each electric utility in the US, contains information on the status of electric utilities and their generation, transmission, and distribution of electric energy. Based on this data, national average electricity loss from transmission, distribution, and/or unaccounted electricity losses is estimated to be 5.1 percent (averaged from about 3100 electric utilities records). For PEPCO plants, the losses are slightly lower, at 4.7 percent. This means that for every 1 kW of electricity supplied to an end-user, about 1.047 kW must be generated at the power station.

Electricity offset will be computed as the sum of electricity generated by the Turbogenerator and transmission/distribution line losses.

2.3. POWER QUALITY PERFORMANCE

When an electrical generator is connected in parallel and operated simultaneously with the utility grid, there are a number of issues of concern. The voltage and frequency generated by the power system must be aligned the same with the power grid. While in grid parallel mode, the Turbogenerator detects the utility voltage and frequency to ensure proper synchronization before actual grid connection occurs. This is accomplished by converting high frequency electrical output to match the grid frequency and voltage at constant current. The Turbogenerator power electronics contain circuitry to detect and react to abnormal conditions that, if exceeded, cause the unit to automatically disconnect from the grid. These out-of-tolerance operating conditions include overvoltages, undervoltages, and over/under frequency. For the test situation, out-of-tolerance conditions are defined as grid voltage outside the range of 480 volts ± 10 percent and electrical frequency of 60 Hz ± 0.01 percent. To characterize the Turbogenerator's ability to maintain synchronization with the grid, voltage and frequency measurements data will be continuously collected on the utility line and compared with the Turbogenerator output. The data will be used to identify reasons for potential shutdowns.

The power factor delivered by the Turbogenerator must be of sufficient quality to allow successful operation of sensitive office equipment. The Turbogenerator electronics allows an operator to manually adjust the power factor. Typically, a power factor setting of 1.0 is used in grid parallel mode, and will be assigned during the verification. It is expected that if the grid power factor is lower than 1.0, the Turbogenerator will provide higher quality power. To determine the performance of the Turbogenerator relative to the grid, baseline measurements data (ranging between 1 to 3 hours) will be collected while the Turbogenerator is not operating. The baseline data will provide information on the grid power factor, and will be used to determine potential improvements provided by the Turbogenerator.

Similar to power factor, harmonic distortions in voltage and current must also be minimized to reduce damage or disruption to electrical equipment such as lights, motors, and office equipment. Industry standards for harmonic distortions have been established by which power generation equipment, such as the Turbogenerator, must deliver. Baseline harmonic measurements will be collected at the grid to "subtract" the harmonics produced by the Turbogenerator.

The power quality evaluation approach has been developed to account for these issues, and will report electrical frequency output, voltage output and voltage transients, power factor, and total harmonic distortion. Each parameter provides an understanding of the quality of electrical power produced by the Turbogenerator, and its ability to maintain synchronization with the electric grid system. The methods for determining these parameters are discussed below.

2.3.1. Electrical Frequency Output

Electricity supplied in the US is typically 60 Hz alternating current. Electrical frequency measurements will be monitored continuously at a rate of 1 reading per minute. The same electric meter used to monitor and record electric power output will be used to take these measurements. The data will be analyzed to determine daily maximum frequency, minimum frequency, average frequency, variance, and standard deviation. Frequency measurements will also be made on the utility supplied electric line, and analyses will be performed to determine if daily variations in frequency are observed to be a function of the time of day and/or the grid frequency. In addition to daily results, the overall maximum frequency, minimum frequency, average frequency, and standard deviation in frequency will also be reported for the entire verification period. These parameters will be calculated only for those periods when the microturbine is in operation and supplied with an electrical load.

Equation 6 will be used to compute the average frequency.

$$F = \frac{\sum_{i=1}^{i=nr} Fi}{nr} \qquad (6)$$

where:

$F =$ *average frequency (Hz)*

$Fi =$ *instantaneous frequency reading of the electric meter (Hz)*

$nr =$ *number of one minute readings logged by the electric meter*

The variance and standard deviation are related measures of how widely values are dispersed from the average value (the mean). These values provide an indication of how stable the frequency output of the Turbogenerator is maintained. The following equations will be used to compute the variance and standard deviation:

$$F\,\mathrm{var} = \frac{\sum_{i=1}^{i=nr} (F - Fi)^2}{nr - 1} \qquad Fstd = \pm\sqrt{F\,\mathrm{var}} \qquad (7, 8)$$

where:

$F\,\mathrm{var} =$ *variation in frequency (Hz)*

$Fstd =$ *standard deviation in frequency*

$F =$ *average frequency (Hz)*

$Fi =$ *instantaneous frequency reading of the electric meter (Hz)*

$nr =$ *number of one minute readings logged by the electric meter*

2.3.2. Voltage Output and Transients

An external transformer will convert the 3-phase 275 volts produced by the Turbogenerator to a 480 volt output. Traditionally, it is accepted that voltage output can vary within ± 10 percent of the standard voltage (480 volts) without causing significant disturbances to the operation of most end-use equipment. Deviations from this range are often used to quantify voltage sags and surges. A voltage transient is a subcycle disturbance (typically an over-voltage) in the alternating current (AC) waveform. As defined by ANSI Standard 1100-1992, a transient is a subcycle disturbance that is evidenced by a sharp brief change in the system voltage. They are also known as spikes or surges that are normally on the line for only 1/1000th of a second or less (less than 1 millisecond). They can be from a few to 10,000 volts-peak above or below the voltage sinewave. Voltage transients normally last only about 50 microseconds according to the ANSI C62.41-1991, which is the standard for transients in facilities operating under 600 volts $_{RMS}$. Transient overvoltages can result in equipment problems, and are caused by such events as electronic load switching, motor load switching, and lighting strikes.

Voltage output and voltage transients will be continuously monitored and recorded throughout testing using the 7600 ION meter. The 7600 ION meter will be capable of measuring 0 to 600 Volts (AC) at a rate of one reader per minute, and identifying surges up to 8 kV at a rate of one reading per 60 milli-seconds. All voltage readings will be reported as root mean square (RMS) voltage, which is the most common approach for measuring AC voltage. The total number of transient occurrences and its magnitude (greater than 480 Volts ± 10 percent) will be analyzed to quantify the following disturbances. All data will be reported on a daily basis, as well the cumulative results for the entire testing period.

- Total number of voltage disturbances exceeding ± 10 percent
- Maximum, minimum, average, and standard deviation of voltage exceeding ± 10 percent
- Maximum and minimum duration of incidents exceeding ± 10 percent

The following equations will be used to compute the average, variance, and standard deviation of the voltage output.

$$V = \frac{\sum_{i=1}^{i=nr} Vi}{nr} \qquad V\,\mathrm{var} = \frac{\sum_{i=1}^{i=nr} (V - Vi)^2}{nr - 1} \qquad Vstd = \pm\sqrt{V\,\mathrm{var}} \qquad (9,10,11)$$

where:

$V =$ *average voltage output (volts)*

$Vi =$ *instantaneous voltage reading from the electric meter (volts)*

$nr =$ *number of readings logged by the electric meter*

$V\,\mathrm{var} =$ *variation in voltage output (volts)*

$Vstd =$ *standard deviation in voltage output*

Voltage measurements will also be conducted simultaneously on the grid, at a rate of one reading per 200 micro-seconds. Voltage transients produced by the Turbogenerator will be examined to determine if such transients were also present in the grid. The power meter manufactured by Rochester Instrument Systems will be installed at the grid. The Rochester meter selected will not be capable of detecting transients with the same resolution as the Turbogenerator (i.e., one reading per 60 milli-seconds with the 7600 ION meter). Nonetheless, a comparison of data collected between the two meters will provide useful information about the origin and duration of transients occurring within 200 micro-second intervals.

2.3.3. Voltage and Current Total Harmonic Distortion

Harmonic distortion of the voltage and current results from the operation of non-linear loads and devices on the power system. Harmonic distortions can damage or disrupt the proper operation of many kinds of industrial and commercial equipment. Voltage distortion is any deviation from the nominal sine waveform of AC line voltage. A similar definition applies for current distortion; however, voltage distortion and current distortion are not the same. Each affects loads and power systems differently, and thus are considered separately.

In quantifying harmonic distortion, several parameters related to distortion are addressed, specifically the definition of a harmonic and how it is quantified. Fourier analysis breaks down a distorted waveform into a set of sine waves with two specific characteristics. The first characteristic deals with frequency of the waveform. The distorted waveform repeats itself with some basic frequency. The sine wave associated with this frequency, which is usually 60 Hz, is called the "fundamental." Each successive sine wave, or harmonic, of this particular set has a frequency that is an integer multiple of the fundamental. So, the 2nd harmonic has a frequency of 120 Hz, the 3rd is at 180 Hz, the 4th is at 240 Hz, and so on.

The second characteristic is the magnitude of the distortion, also called the harmonic distortion factor. Each of these sine waves may have a different magnitude from each other, depending on the actual distorted signal. The magnitude is determined by a harmonic analyzer. Typically, the magnitude of each harmonic is represented as a percentage of the RMS voltage of the fundamental, not the RMS voltage of the distorted waveform. The aggregate effect of all harmonics is called the Total Harmonic Distortion (THD). THD equals the RMS voltage of all harmonics divided by the RMS voltage of the fundamental, converted to a percentage.

Based on IEEE 519 Standard, Honeywell has specified values for total harmonic voltage and current distortion, as follows:

Maximum Voltage THD: 5 percent
Maximum Current THD: 5 percent

For the verification, harmonic distortion (up to the 63rd harmonic) will be recorded for all voltage and current inputs using the 7600 ION. The meter will report one minute average THD for voltage and current, and will be computed as shown below. The results will be analyzed to report the average, maximum, and minimum THD for the test period.

$$Voltage\ THD = \frac{\sum_{i=1st\ Harmonic}^{i=63rd\ Harmonic} Volt_i}{Volt_1} \qquad (12,13)$$

$$Current\ THD = \frac{\sum_{i=1st\ Harmonic}^{i=63rd\ Harmonic} Current_i}{Current_1}$$

where:

Voltage THD = one minute average voltage total harmonic distoriton (%)

Current THD = one minute average current total harmonic distoriton (%)

$Volt_i$ = RMS voltage reading for each harmonic (Volts)

$Current_i$ = current reading for each harmonic (Amps)

Grid harmonics will be measured continuously with the Rochester electric meter. Baseline measurements data collected each morning, prior to the Turbogenerator coming on line, will provide information about existing harmonics on the grid. The current and voltage harmonics present in the grid will be subtracted with the harmonics produced by the Turbogenerator, to determine true contributions from the turbine.

2.3.4. Power Factor

Power factor is the phase relationship of current and voltage in AC electrical distribution systems. Under ideal conditions, current and voltage are "in phase" which results in a power factor equal to 1.0. If inductive loads (e.g., motors) are present, power factors are less than this optimum value. Although it is desirable to maintain power factor at 1.0, the actual power factor of the electricity supplied by the utility may be much lower because of load demands of the different end users. Typical values ranging between 0.8 and 0.9 are common. Low power factor causes heavier current to flow in power distribution lines in order to deliver a given number of kilowatts to an electrical load.

Figure 2-5. Determination of Power Factor

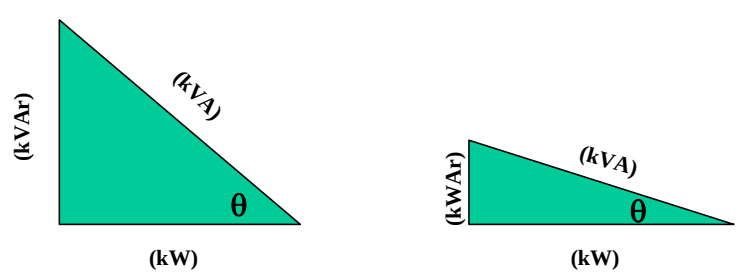

Power Factor = cosine θ

Mathematically, electricity consists of three components which form a power triangle (Figure 2-5): Real Power (kW), Reactive Power (kVAr), and Apparent Power (kVA). Real Power (kW) is the part of the triangle which results in actual work being performed, in the form of heat and energy. This is the power that is verified in Section 2.2. Reactive Power, which accounts for electromagnetic fields produced by equipment, always acts at right angle or 90° to Real Power. Reactive Power does not contribute to the work for which electricity was supplied, and the amount of current used to accomplish this work is increased, causing increased energy losses. The greater the Reactive Power, the worse the losses. Reactive Power can not be measured. Real Power and Reactive Powers create a right triangle where the hypotenuse is the Apparent Power, measured in kilovolt-amperes (kVA). The phase angle between Real Power and Apparent Power in the power triangle determines the size of the Reactive Power leg of the triangle. The cosine of the phase angle is called power factor, which is inversely proportional to the amount of Reactive Power that is being generated. In summary, the larger the amount of Reactive Power, the lower the power factor will be.

The Turbogenerator can be manually specified to deliver varying power factor. For the test, a power factor setting of 1.0 will be used. Baseline measurements of the grid power factor will be conducted to determine if the Turbogenerator is capable of supplying electricity at equal or greater power factor than the grid. Based on the conditions encountered in the field, additional testing may be performed by manually adjusting the power factor. This may consist of testing the Turbogenerator at factors ranging between 0.85 and 0.95.

2.4. OPERATIONAL PERFORMANCE

Operational performance evaluation will document cold start time, number of successful starts, Turbogenerator availability, and safety shutdown capability.

Turbogenerator start time is useful in knowing the time required to achieve full power when backup power is needed or when electrical power is needed during peak demand periods. During start-up, the power system first undergoes a power-up sequence which is performed by the Central Control Unit (CCU). The CCU performs a self-diagnostic test to make sure the power system electronics are ready for operation, and that the operator specified configuration values are correct, checks the grid voltage status, and checks the status of other processors. If all processors are functioning properly, the CCU opens the fuel valve, turns on the igniter, and begins to increase turbine speed. When the speed becomes self-sustaining, the starter is turned off and the engine accelerates to its warm-up speed. The system synchronizes with the grid, closes the main contactor, controls the fuel flow to maintain turbine speed, and delivers user-specified power output. Based on Honeywell specifications, cold start occurs within 240 seconds from the user start command.

The Center plans to verify cold start times, after a minimum of 8 hours of shutdown period has occurred. The Turbogenerator will be specified to operate at full capacity. Cold start will be measured from the time a start command is given until the time the unit reaches full load. Documentation for cold start times will be collected each morning, and the average of each morning's measurements will be used to report the Turbogenerator cold start time. Simultaneously with these measurements, site operators will document the total number of successful starts achieved. Successful starts are defined as the number of events the unit was able to deliver the requested power for a minimum of 15 minutes.

Turbogenerator availability represents the percentage of time the unit is available to serve the load when called upon. Turbogenerator availability is defined as the percentage of time the machine is unavailable due only to unscheduled downtimes. Unscheduled downtimes represent times during which the unit

failed to produce electricity. Manual logs of unscheduled downtimes and reasons for each shutdown (e.g., Was the error operator related?, would the error occur with unmanned operation? If so, how long could the unit be expected to be down until repairs can be made?) will be maintained throughout testing. These logs will be combined with continuously monitored data used to calculate Turbogenerator availability as follows:

$$Availability\ (\%) = \frac{Period\ - UD}{Period} * 100 \qquad (14)$$

$where:$

$Period = duration\ of\ testing\ period, excludes\ periods\ corresponding\ to\ controlled\ tests\ and\ other\ manual\ measurements\ (hrs)$

$UD = unscheduled\ downtime\ due\ to\ failure\ of\ the\ Turbognerator\ (hrs)$

When an electrical generator is connected in parallel and operated simultaneously with the utility grid, the generator must allow for safe and efficient coexistence of the two while they are interconnected. For this reason, it is important that the generator have control interlocks to prevent uncontrolled backfeeding of power onto the grid during periods when the grid is not energized by the utility. The Turbogenerator power electronics contain circuitry to detect and react to abnormal conditions that, if exceeded, cause the unit to automatically disconnect from the grid. To verify that the safety interconnect function of the Turbogenerator provides adequate isolation from the grid in the event of grid power loss, a test of this condition will be conducted. To accomplish this, an interruption of power from the grid will be simulated by switching it off at the interconnect switch gear. Prior to the test, the DAS will be programmed to monitor power functions at 5 second intervals, and the exact time of the beginning of the test will be noted. The response time of the Turbogenerator system will be noted both with manual time measurement (stopwatch) and with the time and data from the DAS. Facility personnel and utility personnel will be invited to monitor this test, to determine that the Turbogenerator safety system functions to their satisfaction. After the test, the DAS will be reset to its normal monitoring time intervals.

2.5. EMISSIONS PERFORMANCE

Exhaust stack emissions testing will be conducted to determine emission rates for criteria pollutants (NO_x, CO, and VOC) and greenhouse gases (CO_2 and CH_4). Stack emission measurements will be conducted at the same time as electrical power output measurements in the controlled test periods. Methane leaks are also expected at the booster compressor where the fuel gas will be pressurized. Prior to testing, screening for leaks will be performed to identify and fix major leaks. After the test is initiated, leak screening has the potential to occur at compressor seals, valves, connections, and fittings using soap screening methods and a portable hydrocarbon analyzer. If significant leaks are detected (i.e., total hydrocarbon concentration exceeding 1000 ppm), the leak rates will be quantified using "EPA Protocol for Equipment Leak Emission Estimates" (EPA 1993). Further discussion of the sampling methods to be used is provided in Section 4.6. The measured leak rates will be combined with the stack emission rate to derive total methane emission rates.

Following NSPS guidelines for evaluation of emissions from stationary gas turbines, exhaust stack emissions testing will be conducted at four points within the normal operating range of the Unit, including the minimum point in the range and peak load. As discussed in Section 2.2.1, these levels have been selected to be 50, 75, 90, and 100 percent of full load capacity. The Turbogenerator will be allowed to stabilize at each load for 15 to 30 minutes before starting the tests. To verify testing precision, three

replicate test runs (each approximately 30 minutes long) will be conducted for each parameter at each load selected. The average results of the three replicates will be reported.

The average emission rate measured during each test run will be reported in units of parts per million (ppmvd), pounds per hour (lb/hr), and pounds per kilowatt hour energy produced (lb/kWh). Reported concentrations will be corrected to 15 percent O_2 (using direct exhaust gas O_2 measurements) and ISO conditions (using ambient temperature, pressure, and humidity logged during testing). As with power production performance testing, CEEE operators will maintain steady unit operations for the duration of each test. Operating data such as fuel consumption, load factor, and power output will be logged and summarized for each test run.

All of the test procedures to be utilized in this verification are U.S. EPA Federal Reference Methods. The Reference Methods are well documented in the Code of Federal Regulations, and include procedures for selecting measurement system performance specifications and test procedures, quality control procedures, and emission calculations (40CFR60, Appendix A). Table 2-2 summarizes the standard Test Methods that will be followed.

Table 2-2. Summary of Emissions Testing Methods

Exhaust Stack			
Pollutant	**EPA Reference Method**	**Number of Loads Tested**	**Number of Test Replicates**
NO_X	20	4	3 per load (30 minutes)
CO	10	4	3 per load (30 minutes)
THC[a]	25A	4	3 per load (30 minutes)
CO_2	3A	4	3 per load (30 minutes)
CH_4	18	4	3 per load (30 minutes)
O_2	3A	4	3 per load (30 minutes)
Methane Leaks at Booster Compressor			
Pollutant	**Test Method**	**Sampling Frequency**	**Number of Test Replicates**
CH_4	EPA tent/bag protocol for equipment leak estimates	2 times each during control and continuous tests	3

[a] VOC emissions will be determined as measured THC minus measured CH_4.

2.5.1. Annual Emission Reductions for Test Site

The electric energy generated by the Turbogenerator will offset the electricity supplied by the local utility. The reduction in electricity demand will result in changes in emissions associated with producing an equivalent amount of electricity at a central power plant. If the emissions per unit of electricity associated with the Turbogenerator are less than the emissions per unit of electricity produced from an electric utility, it can be implied that a net reduction in emissions can occur at this site. Conversely, if the emissions from the Turbogenerator are greater than the emissions from the electricity utility, possibly due to the use of higher efficiency power generation equipment at the power plants, a net increase in emissions can occur. The verification approach for determining annual emission reductions associated with the Turbogenerator consists of the following two steps.

1. Project annual electricity production potential of the Turbogenerator and calculate its emissions
2. Calculate annual emissions for producing an equivalent amount of electricity at the baseline power plant(s) selected in Section 2.2.3
3. Calculate emission reductions using results from Steps 1 and 2.

Projecting the annual electricity production potential for the Turbogenerator will be the first step in calculating emission reductions. In determining this parameter, the power output measurements collected during the 6 weeks of testing will be used. These results will be extrapolated on an annual basis to project annual electric energy production potential. The average electric power output and the operational availability, verified during testing, will be used to compute this potential Equation 15.

$$Annual\ Electric\ Energy\ Projected\ (kWh) = Electric\ Energy_{measured} + Electric\ Energy_{estimated}$$
$$Electric\ Energy_{estimated} = (kW_{avg.})\ (Availability)\ (Time) \qquad (15)$$

Where:

$Electric\ Energy_{measured}$ = *total electric energy generated for test period (kWh)*

$Electric\ Energy_{estimated}$ = *estimated electric energy for remaining period (kWh)*

$kW_{avg.}$ = *average power output measured during testing (kW)*

Availability = *average operational availability measured during testing (%)*

Time = *duration of remaining period (h)*

Carbon dioxide emissions associated with this annual electrical production will be computed as follows:

$$Annual\ Emissions_{Turbogenerator} = (Annual\ Electric\ Energy\ Projected)\ (ER) \qquad (16)$$

Where:

$Emissions_{Turbogenerator}$ = *annual* CO_2 *emissions (lb/yr)*

$Electric\ Energy_{annual}$ = *projected annual electric energy (kWh)*

ER = *measured* CO_2 *emission rate, corresponding to average power output (lb/kWh)*

The power generated by the Turbogenerator will result in emission changes at the gas/oil fired plants identified in Section 2.2.3. Plant specific emission rates were extracted from U.S. EPA's Emissions and Generation Resource Integrated Database (EGRID). EGRID is developed under U.S. EPA's Acid Rain Program, which requires electric utilities to establish Continuous Emissions Monitoring (CEM) systems for measuring and reporting emissions of nitrogen oxides, sulfur dioxide, and carbon dioxide. EGRID contains air pollutant emission and fuel grid mix for thousands of individual power plants and generating units. The 1998 emissions and electricity generation data for the 7 PEPCO power plants were reviewed, and emissions per unit of electricity were compiled for oil, gas/oil plants, coal, and coal/oil plants. Table 2-3 summarizes these results, and represents the average values by fuel types.

Annual CO_2 emissions for gas/oil fired units will be determined by multiplying the emission rates listed in Table 2-3 with the annual electricity offset from grid calculated in Section 2.2.3. This is illustrated in Equation 17.

$$Emissions_{Baseline\ Units} = ER_{gas/oil\ units} * Annual\ Electricity\ Offset\ from\ Grid \quad (17)$$

where :

$Emissions_{Baseline\ Units}$ = *annual* CO_2 *and* NO_x *emissions for producing equivalent amount of electricity at gas/oil fired units whose electricity production will be displaced by the Turbogenerator (lb/yr)*

$ER_{oil\ \&\ oil/gas\ units}$ = *emission rate for gas/oil fired units, see Table 2 – 3 (lb/kWh)*

Annual Electricity Offset from Grid = annual electric energy projected for turbine multiplied by transmission and distribution line losses (1.047)

Table 2-3. Emission Rates for PEPCO Plants

	Emission Rate (lb / kWh)		
	CO_2	NO_x	SO_2
Electricity from Oil Plants	2.6455	0.0036	0.0160
Electricity from Gas/Oil Plants	2.2329	0.0065	0.0182
Electricity from Coal/Oil Plants	2.0957	0.0066	0.0211
Electricity from Coal Plants	2.2814	0.0056	0.0114
Average for All Plants	2.3030	0.0057	0.0149

Source: The Emissions and Generation Resource Integrated Database developed for the Acid Rain Program (U.S. EPA 2000)

2.5.2. Annual Emission Reductions For Model Regions

Different locations across the US will experience emission reductions that could vary significantly from the baseline assumptions. To address the impact of alternate power supplies, annual emissions will be estimated for model regions which represent a diversity in electricity production in the country. The US Department of Energy and the Environmental Protection Agency have prepared a report titled "Carbon Dioxide Emissions from the Generation of Electric Power in the United States" (DOE 2000). This report presents CO_2 emissions on the basis of total mass (tons) and output rate (pounds per kilowatt-hour). The information is stratified by the type of fuel used for electricity generation and presented for both regional and national levels. Regional level emission rates are presented by census division, and are summarized in Table 2-4. Carbon dioxide emission reductions for these model regions will be determined as described as above. The verification approach will assume the electricity produced by the Turbogenerator will displace electricity from all fuel types.

Table 2-4. Emission Rates for Model Regions

US AVERAGE

	Net Generation (Billion kWh)	Emission Rate (lb / kWh)		
	1998	**CO_2**	**NO_x**	**SO_2**
Coal	1873.91	2.117	0.0074	0.0129
Petroleum[c]	126.90	1.915	0.0025	0.0138
Gas[a]	488.71	1.314	0.0024	0.0000
Other Fuels[b]	0.22	1.378	0.0108	0.0015
Total/Average	3212.17	1.3756	0.0045	0.0077

CENSUS DIVISIONS
CO_2 Emission Rate (lb/kWh)

	New England	Middle Atlantic	East North Central	West North Central	South Atlantic	East South Central	West South Central	Mountain	Pacific Contiguous	Pacific Noncontiguous
Coal	1.934	2.062	2.113	2.262	2.026	2.060	2.214	2.179	2.158	2.229
Petroleum	1.984	1.884	2.244	1.759	1.821	1.515	3.955	2.802	2.396	1.641
Gas	1.213	1.213	1.188	1.239	1.659	1.113	1.857	1.376	1.257	1.287
Other[a]	1.339	1.502	1.124	2.422	1.377	3.244	0.151	0.005	2.140	1.661
Total	1.059	1.071	1.680	1.767	1.334	1.457	1.469	1.572	0.417	1.453

[a] Includes natural gas, waste heat, waste gas, butane, methane, propane, and other gas

[b] Includes municipal solid waste, landfill gases, and other fuels that emit anthropogenic CO_2 when burned to generate electricity

[c] Includes petroleum, petroleum coke, diesel, kerosene, liquid butane, liquid propane, oil waste, and tar oil

Source: US Energy Information Administration and U.S. DOE/EPA Report "Carbon Dioxide Emissions From the Generation of Electric Power in the United States"

3.0 DATA QUALITY

3.1. DATA QUALITY OBJECTIVES AND DATA QUALITY INDICATORS

In verifications conducted by the Center and EPA's Office of Research and Development, measurement methodologies and instrumentation are selected to ensure that desired level of data quality occurs in the final results. Data quality objectives (DQO) are stated for key verification parameters before testing commences. These objectives must be achieved in order to draw conclusions from the measurements with the desired level of confidence. This section presents the DQOs for critical verification parameters, followed by a discussion of the Data Quality Indicators (DQIs) that will be used to determine if the DQOs were met.

The process of establishing data quality objectives starts with determining the desired level of confidence in the verification parameters. The next step is to identify all measured values, which affect the verification parameters, and determine the levels of error which can be tolerated. In most cases, the errors associated with the measurement variable is also the error associated with the verification parameter (e.g., electrical power output). For a selected group of verification parameters, the errors associated with multiple measurements must be accounted to determine the cumulative effect of all measured variables on the data quality objectives. For example, electrical efficiency determination requires measurements for power output, fuel flow rate, and fuel heating value. The error associated with each measurement must be achieved to satisfy the DQO of the verification parameter (e.g., ± 0.75 percent for electrical efficiency). The technique used to determine data quality objectives are met is to satisfy the DQI goals. For this verification, DQI goals have been established for accuracy and completion, where completeness is defined as the number of valid determinations expressed as a percent of the total tests or readings conducted.

Although several verification parameters will be quantified in this test, DQOs are established for three verification parameters: electrical power output, electrical efficiency, and exhaust stack emission rates. Table 3-1 lists the DQOs for these parameters and the basis for assigning these values are discussed below.

Electrical Power Output: Precise determination of the electric power generated is required because it is a key performance parameter for the Turbogenerator. The data quality objective for this parameter is set to be ± 0.2 percent. Given a rated maximum power output of 75kW for the system, this will yield a maximum error of ± 0.15 kW, which is sufficient for determining the suitability of the unit for demand control, emergency power backup, and other applications for which it may be considered. This level of accuracy will also exceed the "typical uncertainty" as set forth in PTC22 (Section 1.3.2 – typical uncertainty for power output using gas fuel is 1.8 percent). It also exceeds the maximum permissible variation (± 2 percent) allowed in PTC22 to determine electrical efficiency (Section 2.2.1). The data quality indicator goal required to meet the DQO will consist of assessing the accuracy of the electric power meter.

Electrical Efficiency: The data quality objective for this parameter will be ± 0.75 percent. Given a specified target efficiency of 28 percent for the microturbine, this will yield a maximum error of ± 0.75 percent efficiency (i.e., for a calculated efficiency of 28 percent, the actual value could range from 27.25 to 28.75 percent). This level of accuracy will also meet the "typical uncertainty" as set forth in PTC22 (Section 1.3.1 – typical uncertainty for efficiency using gas fuel is 1.7 percent). The data quality indicator goals required to meet the DQO will consist of achieving a ± 0.2 percent accuracy goal for the power

meter (discussed above), ± 1.0 percent accuracy goal for a mass flow meter, and ± 0.2 percent accuracy goal for fuel heating valve. The Center will make every effort to meet these accuracy goals. However, if unplanned circumstances or excessive variabilities in the measurements are encountered, the DQO for electrical efficiency will be computed using Equation 1.

Exhaust Stack Emissions: EPA Reference Methods, listed earlier in Table 2-1, will be used to quantify emission rates of criteria pollutants and greenhouse gases. The Reference Methods clearly specify the sampling methods, calibration methods, and data quality checks that must be followed to achieve a data set that meets the required objectives. These Methods ensure that run-specific quantification of instrument and sampling system drift and accuracy occurs, and that runs are repeated if specific performance goals are not met. Based on the requirements of the Reference Methods, the DQOs for emission rate measurements are ± 2 percent for NO_x, ± 5 percent for CO_2, CH_4, CO, and THC measurements, and ± 10 percent for VOC. The data quality indicator goals required to meet the DQO will consist of assessing the sampling system accuracy, precision, and drift.

Table 3-1. Data Quality Objectives

Verification Parameter	Accuracy
Power Output	± 0.3 %
Electrical Efficiency	± 0.75 %
Emission Rates	
NO_x	± 2 %
CO, CO_2, and CH_4	± 5 %
VOC	± 10%

Table 3-3 lists the DQI goals associated with the measurements that will be collected in this verification, some of which will be used to assess the DQOs. All independent measurements specified with DQI goals are considered critical measurements, and essential to forming valid conclusions about the Turbogenerator performance. The operational data recorded by the SCADA system are considered non-critical, and will be used for information purposes only. The verification test requires all DQI goals to be satisfied, and the techniques used to perform this determination are discussed in the following section.

Table 3-2. Measurement Instrument Specifications and Data Quality Indicator Goals									
							Data Quality Indicator Goals		
Measurement Variable		**Operating Range Expected in Field**	**Instrument Type / Manufacturer**	**Instrument Range**	**Instrument Rated Accuracy**	**Frequency of Measurements**	**Accuracy***	**Completeness**	**How Verified / Determined**
Turbogenerator Power Output and Quality	Power	0 to 75 kW	Electric Meter/ Power Measurements 7600 ION	0 to 260 kW	± 0.20% reading	once per min	± 0.20% reading	Control tests – 100% Continuous test – 90%	Review manufacturer calibration certificates, Perform sensor function checks*** in field
	Voltage**	0 to 480 V (3-phase)		0 to 600 V	± 0.1% reading		± 0.1% reading		
	Voltage Transients**	600 to 8000 V		0 to 8000 V	not available	once per 60 mili-sec	not defined		
	Frequency**	60 Hz		57 to 63 Hz	± 0.01% reading	once per min	± 0.01% reading		
	Current**	0 to 200 Amps		0 to 200 Amps	± 0.1% reading		± 0.1% reading		
	Voltage THD**	0 to 100 %		0 to 100 %	± 1% FS	once per sec	± 1% FS		
	Current THD**	0 to 100 %		0 to 100 %	± 1% FS		± 1% FS		
	Power Factor**	0 to 1.0		0 to 1.0	± 0.5% reading	once per min	± 0.5% reading		
Booster Compressor Power Consumption	Power **	0 to 5 kW	Rochester Instrument Systems Model PCE	0 to 5 kW	± 0.25% reading		± 0.25% reading		
Utility Grid Power Quality	Voltage**	0 to 480 V	Rochester Instrument Systems Model DPMS	0 to 600 V	± 0.1% reading		± 0.1% FS		
	Frequency**	60 Hz		57 to 63 Hz	not available		not defined		
	Power Factor**	-0.75 to 0.75		0 to 1.0	± 0.008 (rated VA/input VA)		± 0.008 (rated VA/input VA)		
Ambient Meteorological Conditions	Ambient Temperature**	50 to 110 ^{o}F	RTD / Vaisala Model HMP 35A	-4 to 140 ^{o}F	± 0.2 ^{o} F		± 0.2 ^{o} F	Control tests – 100% Continuous test – 90%	Review manufacturer calibration certificates
	Ambient Pressure**	30 to 31 in Hg	SETRA Model 280E or equiv.	0 to 51 in Hg	± 0.11% FS		± 0.11% FS		
	Relative Humidity**	0 to 100 %	Vaisala Model HMP 35A	0 to 100%	± 2% (0 to 90% RH,) ± 3% (90 to 100% RH)		± 3%		

(continued)

Table 3-2. Measurement Instrument Specifications and Data Quality Indicator Goals (continued)

Measurement Variable		Operating Range Expected in Field	Instrument Type / Manufacturer	Instrument Range	Instrument Rated Accuracy	Frequency of Measurements	Data Quality Indicator Goals: Accuracy*	Data Quality Indicator Goals: Completeness	How Verified / Determined
Fuel Input	Mass Flow Rate	42 lb/hr or 16 scfm	Mass Flow Meter / Rosemount 3095	13 to 54 lb/hr or 5 to 20 scfm	± 1.0% reading	once per min	± 1.0% reading	Control tests – 100% Continuous test – 90%	Review manufacturer calibration certificates, Perform sensor function checks in field
	Gas Pressure**	1 to 3 psig	Pressure Transducer / Rosemount or equiv.	0 to 150 psig	± 0.075% FS	once per min	± 0.075% FS		
	Gas Temperature**	-20 °F to 120 °F	RTD / Rosemount Series 68	-58 to 752 °F	± 0.09% reading	twice per week	± 0.09% reading		
	LHV	94 to 98% CH_4 (20,000 to 22,400 Btu/lb)	Gas Chromatograph / HP 589011	0 to 100% CH_4	± 0.2% accuracy for CH_4 ± 0.1% repeatably for LHV	min. 1 sample at each load test, replicates every 3rd collection	± 0.2% for LHV		
Exhaust Stack Emissions	NO_x Levels	0 to 100 ppm	Chemilumunescene / TECO Model 10	0 to 100 ppm	± 0.1% FS	three 30 minute replicates per load	± 2%	Control tests - 100%	Follow EPA Reference Method calibration and QC criteria
	CO Levels	0 to 100 ppm	NDIR / TECO Model 48	0 to 100 ppm	± 0.1% FS		± 5%		
	THC Levels	0 to 100 ppm	FID / JUM Model 3-300	0 to 100 ppm	± 0.1% FS		± 5%		
	CO_2 Levels	0 to 20 %	NDIR / Teledyne Model 731R	0 to 20 %	± 0.05% FS		± 5%		
	CH_4 content	0 to 100 ppm	GC / FID HP Model 5890	0 to 100 ppm	± 0.1% FS		± 5%		
	O_2 Levels	0 to 25%	Teledyne Model 320 AR	0 to 25 %	± 0.1% FS		± 5%		
	H_2O content	0 to 50 %	Gravimetric / NA	0 to 50 %	± 0.2% FS		± 5%		
	Stack Volumetric Flow Rate	not known	Pressure Drop - EPA Method 2	>50 ft/min	± 2%		± 5%		
	Temperature	400 to 600 °F	Thermocouple / Omega Type K	up to 2100 °F	± 1% reading	twice per week	± 1% reading		
CH_4 Leaks At Gas Compressor	Screening**	0 to 100% CH_4	Bascum Turner Model CGI 201	0 to 100% CH_4	1000 to 5000 ppmv - ± 10%	4 times	1000 to 5000 ppmv - ± 10%	90%	Calibrate with a standard of known quality
	Leak Rates**	0 to 5 scfm	Rotameter, GC	0 to 5 scfm	± 5%		±10%		EPA method

FS: full scale
* Accuracy goal represents the maximum error expected at the operating range. It is defined as the sum of instrument and sampling errors.
** These variables are not directly used to assess data quality objectives, but are used to determine if data quality indicator goals for key measurements are met. They are also used to form conclusions about the Turbogenerator performance.
*** Performance checks as a means of verification implies that we will use the manufacturer's specification for accuracy unless quality control performance checks indicate a problem.

3.2. DETERMINATION OF DATA QUALITY INDICATORS

The calibration and Quality Control (QC) checks that will be used to compute the DQIs are summarized in Table 3-3. Figure 3-1 illustrates the measurements system to be employed during controlled and continuous testing. Determination of completeness, accuracy, and precision (emission testing only) calculations will be performed by the Center Field Team Leader during controlled tests. Completeness will be calculated as the number of valid determinations divided by the total number of determinations. The Center Field Team Leader will have the specific responsibility for quality assurance of the on-site field testing. If the DQI goals are not met, the Field Team Leader will have the authority to halt testing until the measurement system is corrected and proven to meet the required criteria goals.

Figure 3-1. Schematic of Installation Setup

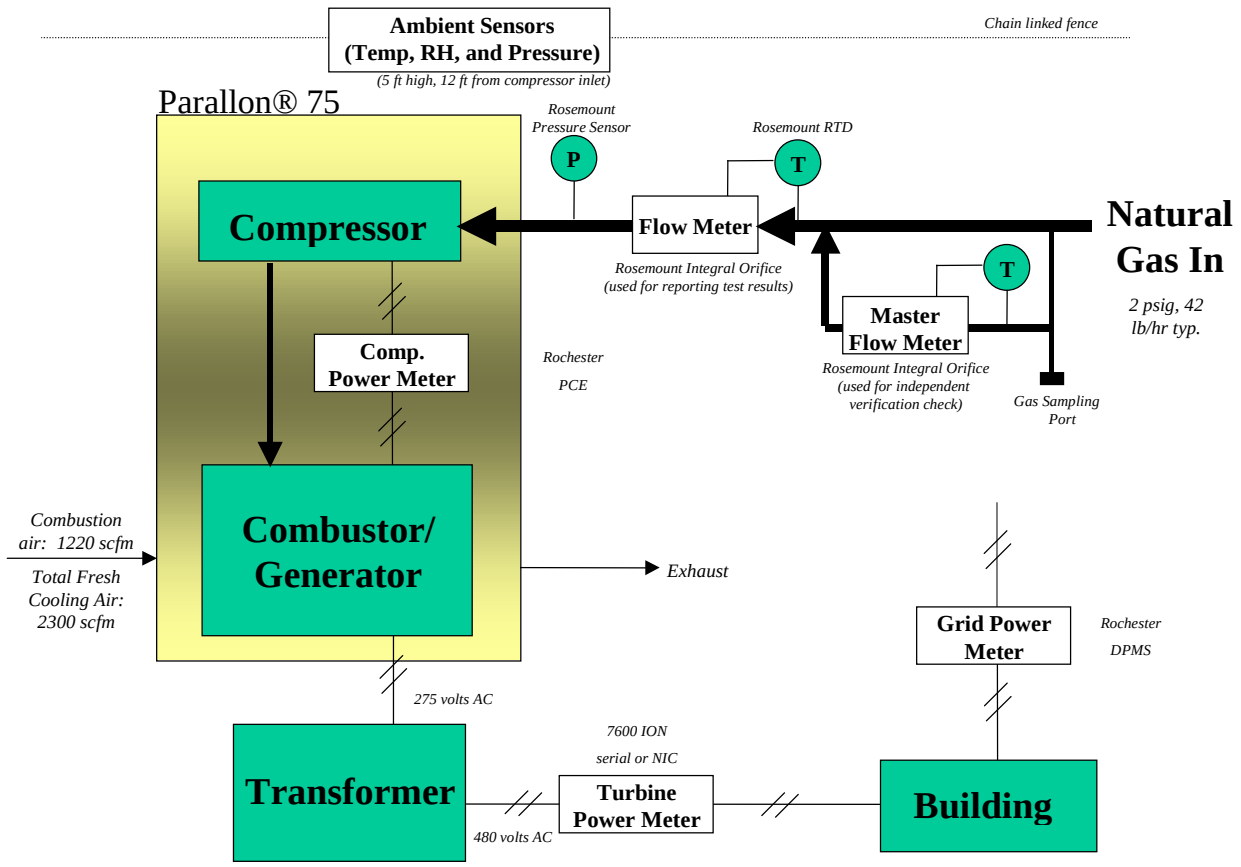

3.2.1. Turbogenerator Power Output

The electric power output will be measured by a digital power meter, manufactured by Power Measurements Ltd. (Model 7600 ION). The 7600 ION will continuously monitor the kilowatts of real power at a rate of one reading per minute. The real-time data collected by the 7600 ION will be downloaded and stored using Power Measurements' PEGASYS software. Further discussion on the communication and data acquisition is provided in Section 6.0.

The meter will be factory calibrated to IEC687 SO.2 and ANSI C12.20 CAO.2 Standards for accuracy. A certificate of compliance will be issued which certifies the instrument met or exceeded published specifications. Consistent with ISO 9002-1994 requirements, the manufacturer will supply documents illustrating calibration and traceability to national standards. The Center will review the certificate and traceability records to ensure that the ± 0.2 percent accuracy goal was achieved. The 7600 ION is manufactured for electric utility applications, and its calibration records are reported to be valid for a minimum of 1 year of use. Thus, re-calibration during the test will not be required, provided the manufacturer specified installation and setup procedures are followed. QC checks related to this activity are listed in Section 5.1, and will be performed by Center personnel. Factory calibration will be repeated at the end of the test to insure that instrument accuracy has remained within the specified limits.

Reasonableness checks will be performed by comparing the 7600 ION power output readings with the SCADA power generation output. At full load, the power meter must read about 75 kW at Standard conditions. Due to the nature of the closed electrical system, independent field verification with a second meter cannot be conducted to verify the accuracy of the 7600 power readings in the field. However, QC checks will be performed in the field for two key measurements (voltage and current output) which are directly related to the power output measurement. The sensor diagnostics will be performed at the beginning, middle, and end of the verification period using a digital multimeter (DMM). The DMM will be used to (1) check that the phase and polarity of the AC voltage inputs are correct and (2) measure each of the 3 phase voltage and currents and compare them to the readings obtained with the 7600 ION. The procedures for conducting these checks are provided in Section 5.1.2. A minimum of 5 individual voltage and current readings will be obtained at the lowest recommended operational load (50 percent) and at full load (100 percent). Accuracy will be computed as the difference between the DMM reading and the 7600 ION reading divided by the DMM reading. Average accuracy will be computed as the half-width of the 95 percent confidence interval of the mean, divided by the mean. The specified voltage and current accuracy for the 7600 ION is ± 0.1 percent, while the DMM is ± 1 percent, thus if the computed average accuracy is determined to be within ± 1 percent, the two meters will be determined to be in agreement. Consequently, the 7600 ION will be confirmed to be functioning properly, and the DQI goal will be determined to be satisfied.

Table 3-3. Summary of QA/QC Checks					
Measurement Variable		**QA/QC Check**	**When Performed/Frequency**	**Expected or Allowable Result**	**Response to Check Failure or Out of Control Condition**
Power Output		Instrument Calibration by Manufacturer	Beginning and end of test	± 0.20% reading	Identify cause of any problem and correct, or replace meter
		Sensor Diagnostics in Field	Beginning, middle, and end of test	Voltage and current checks within ± 1% reading	Identify cause of any problem and correct, or replace meter
Mass Flow Rate		Instrument Calibration by Manufacturer	Beginning and end of test	± 1.0% reading	Identify cause of any problem and correct, or replace meter
		Sensor Diagnostics	Beginning, middle, and end of test	Pass	Identify cause of any problem and correct, or replace meter
		Independent performance check with a second meter in field	Beginning, end, and 2 times during test	average accuracy between the two meters should be less than ± 1.0 %	Identify cause of discrepancy, perform sensor diagnostics, recalculate DQO for electrical efficiency
Fuel Heating Value		Replicate samples collected in field	Once during each load testing	Average accuracy between replicates should be less than ± 0.2%	Recalculate DQO for electrical efficiency
		Calibration with gas standards by laboratory	Prior to analysis of each lot of samples submitted	± 0.2% for CH_4 concentration	Repeat analysis
		Duplicate analyses performed by laboratory	Every sample	± 0.1% for LHV	Repeat analysis
Emission Rates	NO_x	Analyzer interference check NO_2 converter efficiency	Once before testing begins	±2% of analyzer span 98% efficiency	Repair or replace analyzer
		System response time test	Once before testing begins	Less than 30 seconds	Modify or repair sampling system
		Sampling system calibration error and drift checks	Before and after each test run	±2% of analyzer span	Repeat test
	CO, CO_2, O_2	Analyzer calibration error test	Daily before testing	±2% of analyzer span	Repair or replace analyzer
		System bias checks	Before each test	±5% of analyzer span	Correct or repair sampling system
		Calibration drift test	After each test	±3% of analyzer span	Repeat test
	THC	System calibration error test	Daily before testing	±5% of analyzer span	Correct or repair sampling system
		System calibration drift test	After each test	±3% of analyzer span	Repeat test
	CH_4	Calibration with gas standards by certified laboratory	Prior to analysis of each lot of samples submitted	± 2% for CH_4 concentration	Repeat analysis

3.2.2. Mass Flow Rate

The mass flow rate of the fuel supplied to the Turbogenerator will be determined using an integral orifice meter (Rosemount Model 3095). The meter will contain a 0.5 in. orifice plate which will enable flow measurements to be conducted at the ranges expected during testing (5 to 20 scfm natural gas or 13 to 54 lb/hr). The meter will be temperature and pressure compensated, providing mass flow output at standard conditions (60 ^{o}F, 14.7 psia). The meter will continuously monitor flows at a rate of one reading per minute, and will be capable of providing an accuracy of $\pm$ 1 percent reading. The meter will be fitted with a transmitter providing 4 to 20 mA output over the meter's range. This output will be wired to an A/D module attached to a dedicated personal computer.

Prior to testing, the Rosemount will be factory calibrated, and a calibration certificate traceable to the National Institute for Standards and Technology (NIST) will be obtained and reviewed to ensure the instrument rated ±1 percent accuracy was satisfied. The factory certified calibration are reported to be valid for 3 years, and thus will not require re-calibration over the duration of the test, provided manufacturer specified installation and set-up procedures are followed. Specifically, the transmitter electronics are programmed in the field to enable the meter to calculate mass from differential pressure across an integral orifice element. Rosemount's Engineering Assistant (EA) Software which is interfaced to the transmitter via a HART protocol serial modem, is used to input information about the gas being metered and its operating conditions. Specific setup parameters required in the EA are discussed in Section 5.2.2. The Center testing personnel will maintain field logs of all data entered into the EA, and subsequently transmitted to the instrument. An electronic copy of the configuration file will be maintained.

To validate the performance of the meter in the field, two forms of QC checks will be performed: (1) sensor diagnostic checks and (2) independent verification with a second meter. Sensor diagnostic checks consists of zero flow verification by isolating the meter from the flow, equalizing the pressure across the differential pressure (DP) sensors using a crossover valve on the orifice assembly, and reading the pressure differential and flow rate. The sensor output must read 0 flow during these checks. Transmitter analog output checks will also be conducted at the beginning, middle, and end of the test. In this loop test, a current of known amount will be checked against a DMM to ensure that 4 mA and 20 mA signals are produced. The procedures for conducting sensor diagnostic checks are provided in Section 5.2.2.

During testing, independent performance checks will be made using a second, master meter, which will be installed in series with the test meter. During this check, natural gas will flow through both meters while the turbine is operating, and the resulting gas flow rates will be recorded by the DAS. The master meter will be identical to the test meter, and will be calibrated at the same time. Both meters will be certified with an accuracy of $\pm$ 1 percent. A minimum of ten 1 minute flow readings will be obtained at the 50 and 100 percent operating load levels. For each paired reading, accuracy will be computed as the difference between the master meter reading and the test meter reading divided by the master meter reading. Average accuracy will be computed as the half-width of the 95 percent confidence interval of the mean, divided by the mean. If the computed average accuracy is determined to be less than the DQI goal ($\pm$1 percent), the data quality objective for electrical efficiency will be met. The accuracy of flow rates achieved will be reported as the accuracy certified by the manufacturer.

3.2.3. Fuel Heating Value

The LHV of natural gas is expected to be relatively stable (i.e., 1000 ± 10 Btu/1000 ft^3). During control testing, natural gas samples will be collected and analyzed to determine gas composition and heating value. Gas samples will be collected in 500 ml evacuated stainless steel canisters at each load by testing.

The canisters will be provided by a returned to a certified laboratory (Core Laboratories, Inc. of Houston Texas - ISO 9002 Certification Number 31012), and shipped to the laboratory for compositional and heating value analyses.

A minimum of one gas sample will be collected during the three 30 minutes load tests. Following EPA standard procedures, replicate samples will be collected every third sample to quantify potential errors introduced by manual gas sampling. These samples will be collected simultaneously to eliminate variability in results due to small changes in natural gas quality over time. Test procedures for fuel sampling are provided in Section 4.2.

The collected samples will be returned to the laboratory for compositional analysis in accordance with ASTM Specification D1945 for quantification of methane (C1) to hexanes plus (C6+), nitrogen, oxygen, and carbon dioxide. Sample gas is injected into a Hewlett Packard 589011 gas chromatograph (GC) equipped with a silicon and molecular sieve column. Components are physically separated on the columns and the resultant areas compared to the corresponding calibration data. Data acquisition is handled by an HP 339611 integrator. The useful range of the detectable concentrations (mole percent) is specified in Table 1 of the method (D1945). The GC is calibrated weekly as a continuing calibration verification check using a certified natural gas standard. Instrument accuracy is 0.02 percent full scale, but allowable method errors vary among gas constituents according to the following table.

Gas Constituent	Allowable Error (% Diff.)
nitrogen	2.0
methane	0.2
CO_2	3.0
ethane	1.0
propane	1.0
isobutane, n-butane	2.0
isopentane, n-pentane	3.0

The instrument is re-calibrated whenever its performance is outside of any of the acceptance limits listed. Calibration records will be obtained and reviewed by the Center. Records of the natural gas calibration standard will also be obtained. Sample collection canisters are leaked checked at the laboratory prior to shipment to the test site. More detail regarding quality control procedures for fuel sampling is presented in Section 5.3.1.

The compositional data are then used in conjunction with ASTM Specification D3588 to calculate the gross and net heat value, and the relative density of the gas. The accuracy of the LHV determinations using the method is related to the repeatability and reproducibility of the analysis. Specification D3588 provides complex procedures for calculating repeatability for duplicate analyses that will be used by Core Labs. The repeatability for duplicate samples is approximately 1.2 Btu/1000 ft^3, or about 0.1 percent.

Errors introduced by manual sampling in the field must also be accounted. Therefore, the overall LHV accuracy achieved will be computed using the results for the replicate samples collected in the field in addition to the duplicate analyses performed by the laboratory. Accuracy will be computed as the product of the standard error of the mean and the appropriate student-t value divided by the mean. If the computed average accuracy is determined to be less than the DOI goal ($\pm$ 0.2 percent), the data quality objective for electrical efficiency will be satisfied. Conversely, if the DQO goal was not met, DQO for electrical efficiencies will be recalculated using Equation 1.

3.2.4. Emissions Measurements

EPA Reference Methods, listed earlier in Table 2-1, will be used to quantify emission rates of criteria pollutants and greenhouse gases in the exhaust stack. The Reference Methods clearly specify the sampling methods, calibration methods, and data quality checks that must be followed to achieve a data set that meets the required objectives. These Methods ensure that run-specific quantification of instrument and sampling system drift and accuracy occurs, and that runs are repeated if specific performance goals are not met.

Specific DQOs are listed in Table 3-1 for each of the pollutants to be quantified. Table 3-2 lists the DQIs that will be used to evaluate if the DQOs were met. Assessment of the emissions data quality, integrity, and accuracy with respect to the DQOs and DQIs will be performed using a series of measurement system calibrations and QC checks. The QC checks required by the EPA Reference Methods, as summarized in Table 3-3, vary between methods and are pollutant specific. Table 3-3 lists the QC procedures required for each pollutant, the frequency of the calibrations and checks, the maximum allowable result, and corrective measures for failed checks. Satisfaction and documentation of each of the calibrations and QC checks conducted will verify the accuracy and integrity of the measurements with respect to the DQI's listed in Table 3-2, and subsequently the DQOs for each pollutant. QC requirements for each of the pollutants are described below. Section 4.3 of this plan provides details regarding sampling system components, sampling procedures, and specific calibration and QC check procedures.

In accordance with Method 20 for determination of NO_x emissions, QC requirements include an analyzer interference response check, an NO_2 converter efficiency test, system response time determination, sampling system calibration error, and sampling system drift tests. The interference and NO_2 converter efficiency tests are conducted once prior to the start of testing to verify proper analyzer function. The response time test is conducted on-site and prior to testing to verify that the system response time (i.e., the time required to route sample gas from the stack to the analyzer and obtain stable analyzer readings) is 30 seconds or less. The calibration error and drift tests are direct assessments of system accuracy conducted before and after each test run using EPA Protocol 1 gas standards.

In accordance with Method 25A for determination of THC emissions, QC requirements include sampling system calibration error and drift tests before and after each test conducted. The calibrations are direct assessments of sampling system accuracy using EPA Protocol 1 gas standards. Methane samples will be collected and analyzed using a GC/FID following the guidelines of EPA Draft Method 0040. The GC will be calibrated prior to sample analysis using certified methane standards, and the accuracy of the methane analysis is $\pm$ 2 percent. The THC and methane test results for each test period will be used to calculate VOC concentrations as THC less methane. Therefore, the DQO for VOC is 10 percent because two separate measurements are involved. Actual calibration data from the THC sampling system calibrations and the GC/FID calibrations for the methane analyses will be used to propagate error in the calculated VOC concentrations.

Emissions of CO will be determined in accordance with Method 10, and emissions of O_2 and CO_2 in accordance with Method 3A. QC criteria for CO measurements are not well defined in Method 10. Method 3A references EPA Method 6C (determination of sulfur dioxide emissions) for QC criteria, and these criteria will be followed for this testing. The criteria specified in Method 6C include determination of analyzer calibration error, sampling system bias, and calibration drift. The calibration error checks are conducted once per day of testing to verify proper instrument function. The system bias checks are conducted before and after each test run to determine overall sampling system accuracy. These pre- and post-test system calibrations are also used to determine sampling system drift during each test period.

3.2.5. Other Measurements

3.2.5.1. Power Quality Measurements

The DQI accuracy goal for voltage output is ± 0.1 percent. Given a voltage output of 480 volts, an uncertainty of ± 0.48 volts is expected for readings ranging between 0 to 600 volts. This level is sufficient to determine when the Turbogenerator has exceeded the industry accepted ± 10 percent threshold. The accuracy for power factor is ± 0.5 percent, which is sufficient to meet the ± 2 percent maximum permissible variation allowed for electrical efficiency determination by the PTC 22 method. The accuracy goal for total harmonic distortion is ± 2 percent, which is sufficient to meet the ± 5 percent level defined in the IEEE 519 standard. The 7600 ION electric meter, selected for Turbogenerator power output measurement, is capable of meeting the above stated accuracy requirements. The 7600 ION will be calibrated prior to installation in the field. Calibration certificates and records illustrating traceability to national standard will be obtained from the manufacturer, and reviewed to ensure the meter meets the specified accuracy requirements. QC checks listed in Section 5.1 will be followed to ensure proper operation in the field.

Because varying power conditions on the grid can adversely effect the power conditions at the facility and the microturbine, the grid electric power will be monitored using a multiple parameter digital power transducer. The grid power meter, manufactured by Rochester Instrument Systems (Model DPMS), will continuously monitor the kilowatts of active power at a rate of one reading per minute. The meter complies with IEC801-2, IEC801-4 Class 4 and ANSI C37.90 standards (specified to meet or exceed the accuracy requirements of these standards). The real time data collected by the meter will be downloaded and stored using the existing on-site data acquisition system. Further discussion on communication and data acquisition is provided in Section 6.0. Prior to testing, the meter will be factory calibrated, and calibration records traceable to national standards will be obtained and reviewed. Similar to the 7600, this meter will be pre-configured and ready to operate with pre-configured measurements and data collection intervals, calculations, and recording functions. Thus, it will not require extensive operator input in setting up the instrument. However, sensor diagnostics discussed in Section 3.2.1 will be performed as a QC check.

Reasonableness checks will be performed throughout testing. For example, voltage output and electrical frequency must be about 480 volts and 60 Hz, respectively. The cement readings must be about 100 to 150 amps, and the power factor must be similar to the manual setting specified in the SCADA.

3.2.5.2. Gas Compressor Electric Power Consumption

Because the parameter of primary importance regarding the operation of gas booster compressor is its power consumption, this quantity will be metered using an electronic watt transducer. The transducer, manufactured by Rochester Instrument Systems (Model PCE), will continuously monitor the kilowatts of power used by the booster compressor at a rate of one reading per minute. The meter complies with ANSI C37.90a-1974 (IEEE SWC) and BEAMA Test No. 219 standards (specified to meet or exceed the accuracy requirements of these standards). The DQI goal has been set for ± 0.25 percnet for booster compressor power measurements. Calibration records traceable to national standards will be obtained and reviewed before the meter is installed in the field to determine if the specified accuracy goal was achieved in the calibrations. Similar to the other electric meters used in this test, this meter will be pre-configured and ready to operate with pre-configured measurements and data collection intervals, calculations, and recording functions. The Center will perform sensor diagnostics discussed in Section 3.2.1 as QC checks to verify operation in the field.

3.2.5.3. Gas Compressor Methane Leak Measurements

U.S. EPA protocol for equipment leak estimates will be applied to "bag" or otherwise enclose the leaking gas emanating from the booster compressor, and directly measure the leak rate. Sampling procedures and QC procedures are discussed in Section 5.4, respectively. EPA's tent/bag method is nominally accurate to within $\pm$ 20 percent (EPA 1993), but has been shown to be capable of accuracies better than 10 percent when carefully applied (SRI 1996). Thus, the data quality indicator goal has been set at $\pm$ 10 percent for methane leak rate measurements. Although measurement frequency does not affect the accuracy of an individual measurement, a large number of measurements does improve the precision (i.e., decrease the confidence interval for the mean). For this reason, manual leak measurements will be repeated in triplicate during each of the leak screening and measurement periods planned for the overall test. Accuracy achieved will be assigned as the product of the standard error of the mean and the appropriate Students-t value divided by the mean. If the computed accuracy is determined to be less than the DQI goal ($\pm$10 percent), the required DQI goal will be met. QC procedures for key measurement equipment include calibration of the hydrocarbon analyzer used to detect methane concentrations, and calibration of the rotameter used to monitor gas flow rate into the bag. These procedures are discussed in detail in Section 5.5.2.

3.2.5.4. Meteorological Data Collection

The ambient meteorological conditions (temperature, relative humidity and barometric pressure) will be monitored using a pressure sensor and an integrated temperature/ humidity unit located in close proximity to the air intake of the Turbogenerator. The integrated temperature/ humidity unit uses a platinum 100 Ohm, 1/3 DIN RTD (resistance temperature detector) for temperature measurement. As the temperature changes, the resistance of the RTD changes. This change in resistance is detected and converted by associated electronic circuitry which provides a linear DC (4-20mA) output signal. The integrated unit uses a thin film capacitive sensor for humidity measurement. The dielectric polymer capacitive element varies in capacitance as the relative humidity varies, and this change in capacitance is detected and converted by internal electronic circuitry which provides a linear DC (4-20mA) output signal. This sensor features electronic compensation to maintain accuracy over a broad range of temperature conditions. The barometric pressure is measured by a variable capacitance sensor. As pressure increases, the capacitance decreases. This change in capacitance is detected and converted by internal electronic circuitry which provides a linear DC (4-20mA) output signal. The range and accuracy of each sensor are given in Table 3-2. The response time of the temperature and humidity sensors is 0.25 seconds and the response time of the pressure sensor is under 2 seconds. The output of these units will be wired to an A/D module attached to a dedicated personal computer.

Electrical efficiency determinations requires variability in ambient temperature and barometric pressure to be less than $\pm$ 4 ^{o}F and $\pm$ 0.5 percent, respectively. The instruments selected for the verification are capable of providing $\pm$ 2 ^{o}F for temperature and $\pm$ 0.06 percent and barometric pressure, which exceed the PTC22 requirements for meteorological data. The measurement equipment will be factory calibrated to NIST traceable standards for accuracy. Calibration certificates indicating conformance to these standards will be obtained from the laboratory, and reviewed to ensure the stated data quality indicator goal will be achieved. QC procedures for the installation and operation of this equipment in the field are discussed in Section 5.6.2. In addition, reasonableness checks will be performed by comparing the test instrument readings with the values reported by the nearest national weather station at the National Airport.

3.2.5.5. Fuel Gas Pressure

Fuel gas pressure will be monitored with a pressure transducer at a rate of one reading per minute. The readings collected by this instrument are not used to directly determine verification parameters, but are used to assess operating conditions under which field testing was performed. A Rosemount model 3051 "smart" pressure transmitter, which has a high degree of stability over time (0.25 percent in five years) will be used. The accuracy goal for the meter is to achieve a maximum error of $\pm$ 0.75 percent full scale, which will be sufficient to measure the 2 psig operating pressure.

Prior to installation in the field, the meter will be laboratory calibrated by the manufacturer, and the calibration results will be reviewed to ensure the manufacturer specified accuracy goal is met. Similar to other continuous monitoring equipment, the pressure transmitter is designed to operate continuously and unattended. Manufacturer specified startup checks and reasonableness checks will be performed in the field (i.e., fuel pressure should be about 2 psig during turbine operating periods). Routine quality control consists of daily checks for reasonableness, trends, spikes, or other changes in operation that could indicate a system problem. The data quality indictor goals will be determined met, provided the routine QC checks do not indicate sensor function failure.

4.0 SAMPLING PROCEDURES

4.1. CONTROL TEST PROCEDURES

1. In the SCADA *Generator Control* screen, select 100 percent load in the Power Command box and 1.0 in the Power Factor command box. Record these user specified settings in the log form (Appendix B-1).
2. Coordinate with emissions testing personnel to establish a start time. Record this time in the log form.
3. Continue operating the Turbogenerator at the selected load for a minimum of 4 minutes.
4. Obtain a minimum of one gas sample from the fuel supply line. Collect replicates at every third sample. Follow gas sampling procedures outlined in Section 4.2.
5. After 30 minutes of data are collected, review power output, power factor, fuel flow rate, ambient temperature, and barometric pressure to determine if all of the following criteria are satisfied:

Power output (kW)	$\pm$ 2 %
Power factor	$\pm$ 2 %
Fuel flow	$\pm$ 1 %
Barometric pressure	$\pm$ 0.5 %
Ambient air temperature	$\pm$ 4 ^{o}F

6. If the above criteria are not satisfied, continue operating the Turbine at the selected load. After each 15 minute interval, repeat Step 5 until the uncertainty criteria are met. Record the time intervals when valid data were obtained (minimum of 4 minutes and maximum of 30 minutes).
7. Verify with emissions testing personnel to determine if emissions testing QC requirements are satisfied. Establish an end time. Record this time in the log form.
8. Repeat Steps 1 through 7 by changing the operating load to 90, 75, and 50 percent. Data and calculations for each controlled test repetition will be maintained independently using the log forms provided in Appendix B-1.

4.2. FUEL GAS SAMPLING PROCEDURES

Fuel gas samples will be collected no less than once per test load condition. Samples will be collected at an access port in the fuel line (Figure 4-1). The port is downstream of a ball valve and consists of ¼-inch NPT union. At this point, fuel pressure is regulated by the facility at approximately 2 psig. Collected samples will be provided to Core Laboratories for compositional analysis and determination of LHV. The sample canisters will be provided by the laboratory and are 600 ml vessels with valves on the inlet and outlet sides. As discussed in Section 3.2.3, replicate samples will be collected every third sample, to evaluate sampling error. The canisters are designed such that they can be configured in series, thus allowing the replicates to be collected simultaneously. The following sampling and analytical procedures will be followed.

Figure 4-1. Fuel Measurement System

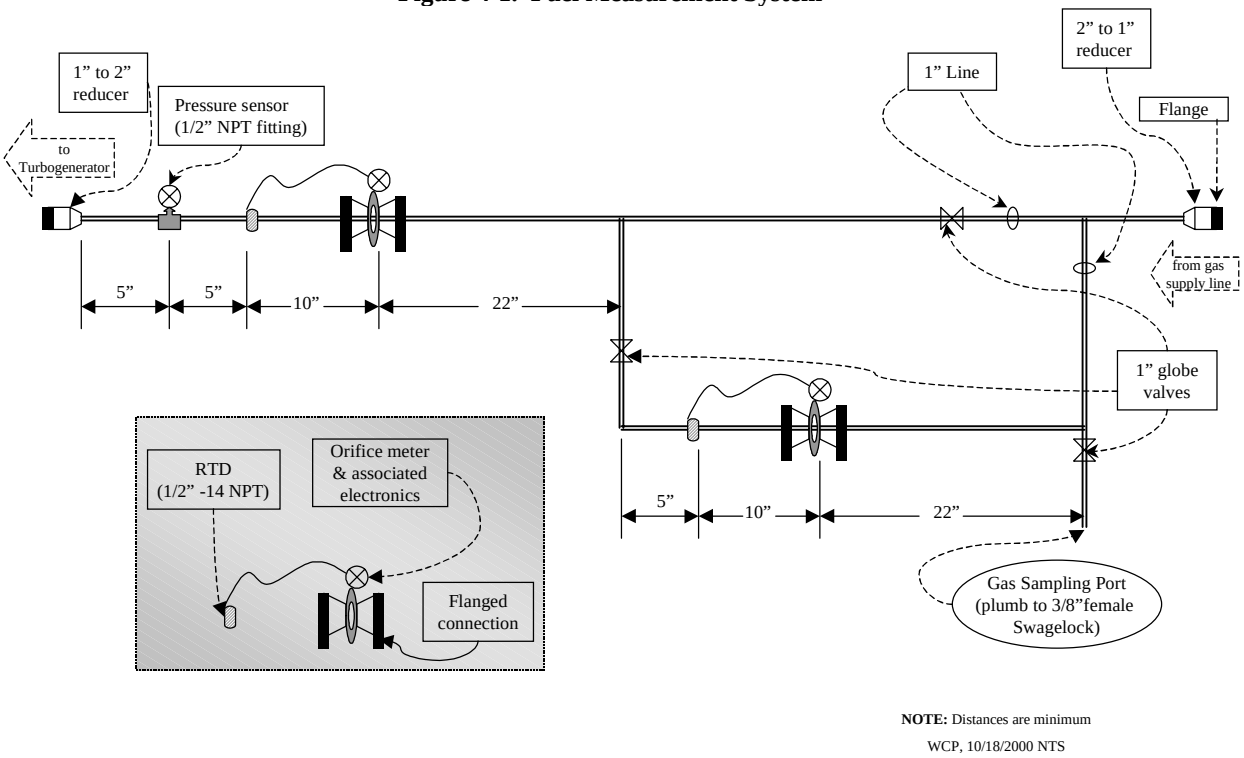

1) Attach a leak free vacuum gauge to the inlet of two pre-evacuated stainless steel sample canisters. Open each canister inlet valve and verify that the canisters are fully evacuated. Record the absolute pressures.
2) Close the inlet valves, remove the vacuum gauge, and attach a canister to the sample port on the fuel line. Attach the inlet of the second canister to the outlet of the first to enable replicate sampling.
3) Open the fuel line valve upstream of the canisters, and open the inlet and outlet valves on the first canister and just the inlet valve on the second. Wait 5 seconds to allow the canisters to fill with fuel.
4) Open the second canister outlet valve and purge the canisters for 5 more seconds. Close the canister outlet valves, the canister inlet valves, and the fuel line valve.
5) Remove canister from port. Record date, time, canister ID number, and final canister pressure (Appendix B-2) on proper chain-of-custody form (Appendix B-3).
6) Return collected samples to Core Laboratories along with completed chain-of-custody form.

Analytical Procedures:

1) Samples are received with proper chain-of-custody form and logged into the laboratory system for analysis.
2) Samples are injected and analyzed. The GC determines gas constituent concentrations based on the areas of the chromatograph peaks relative to the gas standard.
3) Duplicate analysis is conducted on one sample per lot.
4) Fuel LHV is calculated using results of each analysis and equations provided in ASTM D3588.
5) Hard copies of calibration records and LHV results will be submitted to the GHG Center.
6) Determine accuracy based on the replicates.

4.3. EXHAUST STACK EMISSION MEASUREMENTS

U.S. EPA guidance for testing emissions from stationary gas turbines will be followed. Testing will be conducted at four different turbine loads within the normal range of operation. Three test runs will be conducted for each parameter at each load selected. Nine traverse points will be selected within the 23 by 19-inch rectangular stack extension. During each test, sampling will be conducted for approximately 3 minutes at each point for a total test duration of 27 minutes. Results of the testing will be reported in units of parts per million by volume dry (ppmvd) corrected to standard day ISO conditions, and 15 percent O_2, pounds per hour (lb/hr), and pounds per kilowatt-hour (lb/kWh). Appendix A-4 illustrates an example summary of emissions testing results, and Appendices A-5 and A-6 provide example data sheets.

TRC Environmental will be contracted by the Center to perform conduct all of the stack testing. The contractor will provide all test equipment, sampling media, and labor needed to complete the testing and will operate under the supervision of a Center representative. All of the test procedures to be utilized in this verification are U.S. EPA Federal Reference Methods. The Reference Methods are well documented in the Code of Federal Regulations, include detailed procedures, and generally address the elements listed below (40CFR60, Appendices A and B).

- Applicability and principle
- Range and sensitivity
- Definitions
- Measurement system performance specifications
- Apparatus and reagents
- Measurement system performance test procedures
- Quality control procedures
- Emission calculations
- Bibliography

Each of the selected methods utilizing an instrumental measurement technique includes performance-based specifications for the gas analyzer used. These performance criteria cover span, calibration error, sampling system bias, zero drift, response time, interference response, and calibration drift requirements. An overview of each test method planned for use is summarized in Table 4-1 and discussed in more detail in the following sections. The entire Reference Method reference will not be repeated here, but will be available to site personnel during testing, and can be viewed in the Code of Federal Regulations (40CFR60, Appendix A).

Table 4-1. Summary of Emission Testing Methods

Pollutant	Reference Method	Principle of Detection	Proposed Analytical Range	Accuracy
O_2	3A	Micro-fuel Cell	0-25%	± 5%
CO_2	3A	NDIR	0-20%	± 5%
NO_x	20	Chemiluminescence	0-100 ppm	± 2%
CO	10	NDIR-Gas Filter Correlation	0-100 ppm	± 5%
CH_4	18	GC/FID	0-100 ppm	± 5%
THC[a]	25A	Flame ionization	0-100 ppm	± 5%

[a] VOC emissions will be determined as measured THC minus measured CH_4.

4.3.1. Gaseous Sample Conditioning and Handling

A schematic of the sampling system to be used for determination of concentrations of CO_2, O_2, NO_x, CO, and VOC is presented as Figure 4-2. In order for the CO_2, O_2, NO_x, and CO instruments used to operate properly and reliably, the flue gas must be conditioned prior to introduction into the analyzer. The gas conditioning system is designed to remove water vapor and/or particulate from the sample. All interior surfaces of the gas conditioning system are made of stainless steel, Teflon™, or glass to avoid or minimize any reactions with the sample gas components. Gas is extracted from the engine exhaust gas stream through a heated stainless steel probe, filter, and sample line and transported to two ice-bath condensers on each side of the sample pump. The condensers remove moisture from the gas stream. The clean, dry sample is then transported to a flow distribution manifold where sample flow to each analyzer is controlled. Calibration gases can be routed through this manifold to the sample probe by way of a Teflon™ line. This allows calibration and bias checks to include all components of the sampling system. The distribution manifold also routes calibration gases directly to the analyzer when linearity checks are made on each of the analyzers.

The THC analyzer is both equipped with a flame ionization detector (FIDs) as the method of detection. This detector analyzes gases on a wet, unconditioned basis. Therefore, a second heated sample line is used to deliver unconditioned exhaust gases directly to the THC analyzer.

Figure 4-2. Gas Sampling and Analysis System

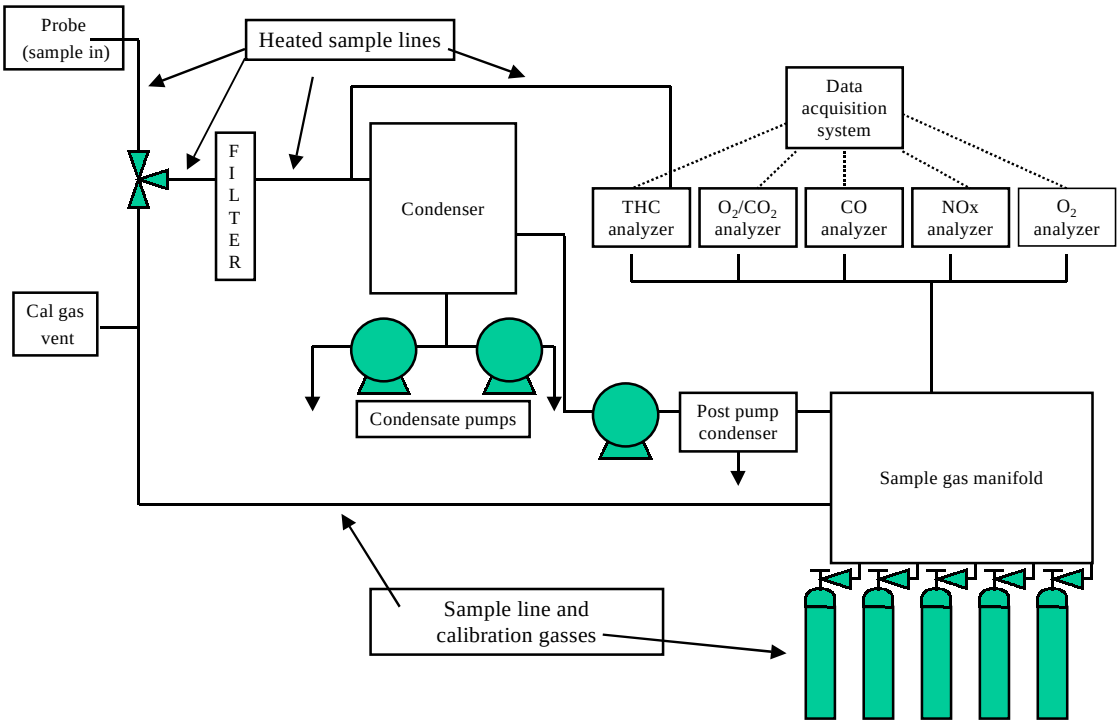

4.3.2. Gaseous Pollutant Sampling Procedures

For CO_2 and O_2 determination, a continuous sample will be extracted from the emission source and passed through instrumental analyzers. For determination of CO_2 a Teledyne 731R non-dispersive infrared (NDIR) analyzer will be used. NDIR measures the amount infrared light that passes through the sample gas versus through a reference cell. Because CO_2 absorbs light in the infrared region, the degree of light attenuation is proportional to the CO_2 concentration in the sample. The CO_2 analyzer range will be set at or near 0 to 20 percent.

Oxygen will be analyzed using a Teledyne 320AR fuel cell-analyzer. This analyzer uses electrolytic concentration cells that contain a solid electrolyte to enhance electron flow to the O_2 as it permeates through the cell. The fuel-cell technology used by this instrument determines levels of O_2 based on partial pressures. The zirconium oxide electrode is porous and serves as an electrolyte and as a catalyst. The sample side of the reaction has a lower partial pressure than that of reference side. The current produced by the flow of electrons is directly proportional to the O_2 concentration in the sample. The O_2 analyzer range will be set at or near 0 to 25 percent.

Nitrogen oxides will be determined on a continuous basis, utilizing a Thermo Environmental Model 10 chemilumenescence analyzer. This analyzer catalytically reduces nitrogen oxides in the sample gas to NO. The gas is then converted to excited NO_2 molecules by oxidation with O_3 (normally generated by ultraviolet light). The resulting NO_2 emits light ("luminesces") in the infrared region. The emitted light is measured by an infrared detector and reported as NO_x. The intensity of the emitted energy from the excited NO_2 is proportional to the concentration of NO_2 in the sample. The efficiency of the catalytic converter in making the changes in chemical state for the various nitrogen oxides is checked as an element of instrument set up and checkout. The NO_x analyzer range will be operated on an appropriate range where no exhaust gas readings are less than 30 percent of full scale or greater than full scale.

For Reference Method 10, a Thermo Environmental Model 48 gas filter correlation analyzer with an optical filter arrangement will be used. This method provides high specificity for CO. Gas filter correlation uses a constantly rotating filter with two separate 180-degree sections (much like a pinwheel.) One section of the filter contains a known concentration of CO, and the other section contains an inert gas without CO. The sample gas is passed through the sample chamber containing a light beam in the region absorbed by CO. The sample is then measured for CO absorption with and without the CO filter in the light path. These two values are "correlated", based upon the known concentrations of CO in the filter, to determine the concentration of CO in the sample gas. Based on site-specific data collected during preliminary measurements, the CO analyzer range will be operated on an appropriate range where no exhaust gas readings are less than 30 percent of full scale or greater than full scale.

Concentrations of VOC will be determined as THC less the methane content in the gas stream. Total hydrocarbons in the exhaust gas will be measured using a JUM Model 3-300 flame ionization analyzer which passes the sample through a hydrogen flame. The intensity of the resulting ionization is amplified, measured, and then converted to a signal proportional to the concentration of hydrocarbons in the sample. Unlike the other methods, the sample stream going to the JUM analyzer does not pass through the condenser system, so it can be kept heated until analyzed. This is necessary to avoid loss of the less volatile hydrocarbons in the gas sample. Because all combustible hydrocarbons are being analyzed and reported, the emission value must be calculated to some base. In this case, VOC emissions will be reported as methane, and the calibration gas for THC will be methane. Concentrations of methane in the exhaust gas will be determined in accordance with EPA Draft Method 0040. Integrated gas samples will be collected in Tedlar bags and shipped to a certified laboratory for analysis. In the laboratory, samples will be directed to a Hewlett Packard 5890 gas chromatograph (GC) equipped with a flame ionization

detector. Similar to the fuel sampling, the GC/FID will be calibrated with appropriate certified calibration gases. Sample collection bags will be leak checked prior to testing. In addition, one replicate sample will be collected and one duplicate analysis will be conducted for each turbine load tested.

4.3.3. Calibrations and Quality Control Checks

Analyzer and sampling system calibrations and other QC check criteria specified in the Reference Methods for emissions determinations were identified in Section 3.2.4 and Table 3-3. These QC procedures will be used to determine if overall DQOs for emissions were met during the verification. All of these procedures are detailed in the corresponding Reference Methods and will not be repeated here in entirety. However, the specific procedures to be conducted during this test are outlined below.

<u>NO_x Analyzer Interference Test</u>

In accordance with Method 20, an interference test will be conducted on the NO_x analyzer once before the testing begins. This test is conducted by injecting the following calibration gases into the analyzer:

- CO – 500 $\pm$ 50 ppm in balance nitrogen (N_2)
- SO_2 – 200 $\pm$ 20 ppm in N_2
- CO_2 – 10 $\pm$ 1 % in N_2
- O_2 – 20.9 $\pm$ 1%

For acceptable analyzer performance, the sum of the interference responses to all of the interference test gases must be $\leq$ 2 percent of the analyzer span value. Analyzers failing this test must be repaired or replaced.

<u>Sampling System Response Time</u>

Method 20 for NO_x emissions also specifies that the sampling system response time must be less than 30 seconds. A response time test will be conducted after the sampling system is assembled at the test site, and before any testing begins. The response time test is conducted using the following procedures:

1) Introduce zero calibration gas through the sampling system at the sampling probe and obtaining a stable zero reading.
2) Turn the sampling valve from calibrate to sample mode to begin sampling turbine exhaust gas, and start a stopwatch.
3) When a stable reading for NO_x concentration in the exhaust gas is obtained, record the upscale response time as the 95 percent step change from zero to the stable reading.
4) Next, introduce the high-level calibration gas through the sampling system at the sampling probe and obtaining a stable high-level reading.
5) Again, turn the sampling valve from calibrate to sample mode to begin sampling turbine exhaust gas, and start a stopwatch.
6) When a stable reading for NO_x concentration in the exhaust gas is obtained, record the downscale response time as the 95 percent step change from the high-level gas to the stable reading.
7) Repeat this entire sequence two more times until three upscale and downscale response times are recorded.
8) Record the final system response time as the highest value recorded.

The system response time must be less than 30 seconds. Systems failing this criteria must be repaired or modified to reduce the response time.

NO_2 Converter Efficiency Test

The NO_x analyzer converts any NO_2 present in the gas stream to NO prior to gas analysis. An efficiency test on the converter must be conducted prior to beginning the testing. This procedure is conducted by introducing to the analyzer a mixture of mid-level calibration gas and air. The analyzer response is recorded every minute for 30 minutes. If the NO_2 to NO conversion is 100 percent efficient, the response will be stable at the highest peak value observed. If the response decreases by more than 2 percent from the peak value observed during the 30-minute test period, the converter is faulty. A NO_x analyzer failing the efficiency test must be either repaired or replaced prior to testing.

Sampling System Calibration Error and Drift

The sampling system calibration error test must be conducted prior to the start of the first test on each day of testing on the NO_x and THC sampling systems. The calibration is conducted by sequentially introducing a suite of calibration gases to the sampling system at the sampling probe, and recording the system response. Calibrations will be conducted on all analyzers using Protocol No. 1 calibration gases. Four calibration gases of NO_x, and THC are required including zero, 20 to 30 percent of span, 40 to -60 percent of span, and 80 to 90percnet of span. The maximum allowable error in response to any of the calibration gases is $\pm$ 2 percent of span for NO_x and $\pm$ 5 percent of span for THC.

At the conclusion of each test conducted during the day, the zero and mid-level calibration gases are again introduced to the sampling systems at the probe and the response is recorded. System response is compared to the initial calibration error to determine sampling system drift. Drifts in excess of $\pm$ 2 percent for NO_x and $\pm$ 3 percent for THC are unacceptable and the test must be repeated.

Calibration Error, System Bias, and Calibration Drift Tests

These calibrations will be conducted to verify accuracy of CO, CO_2, and O_2 measurements. The calibration error test is conducted at the beginning of each day of testing. A suite of calibration gases is introduced directly to the analyzer and analyzer responses are recorded. EPA Protocol 1 calibration gases must be used for these calibrations. Three gases are used for CO_2 and O_2 including zero, 40 to 40 percent of span, and 80 to 100 percent of span. Four gases are used for CO including zero and approximately 30, 60, and 90 percent of span. The maximum allowable error in response to any of the calibration gases is $\pm$ 2 percent of span.

Before and after each test conducted during the day, the zero and mid-level calibration gases are introduced to the sampling systems at the probe and the response is recorded. System bias is then calculated by comparing the system responses to the calibration error responses recorded earlier. System bias must be less than $\pm$ 5 percent of span for the sampling system to be acceptable. The pre- and post-test system bias calibrations are also used to calculate sampling system drift for each pollutant. Drifts in excess of $\pm$ 3 percent are unacceptable and the test must be repeated.

Appendix A-6 provides an example calibration records sheet.

4.3.4. Determination of Emission Rates

The instrumental testing for CO_2, O_2, NO_x, and CO results in exhaust gas concentrations in units of ppmvd. The THC and methane results are as ppmv on a wet basis, but will be corrected to ppmvd based on measured exhaust gas moisture measurements made in conjunction with the testing. No less than once

at each load tested, an EPA Reference Method 4 test will be conducted to determine the moisture content of the exhaust gases.

EPA Method 19 provides procedures for converting the ppmvd concentration values of the exhaust gas pollutants to emission rate values in units of pounds per hour (lb/hr). For this testing, the lb/hr emission rates will be normalized to turbine heat input and reported as lb/MMBtu, and to turbine output and reported as lb/kWh.

The fundamental principle of this method is based upon "F-factors". F-factors are the ratio of combustion gas volume to the heat content of the fuel, and are calculated as a volume/heat input value, (e.g., standard cubic feet per million Btu). This method applies only to combustion sources for which the heating value for the fuel can be determined. The F-factor can be calculated from either CO_2 or O_2 values, on either a wet or dry basis, as dictated by the measurement conditions for the gas concentration determinations. This method includes all calculations required to compute the F- factors and guidelines on their use. The F-factor for natural gas will be calculated from supplied pipeline data, or the Center may choose to use the published F-factor for natural gas (8,710 dscf/MMBtu) as allowed by Method 19.

4.4. GAS COMPRESSOR METHANE LEAK MEASUREMENTS

Screening for methane leaks at the gas compressor will be determined with soap solution and ambient monitoring of methane concentration at the leak interface. Soap screening test will consist (1) developing a soap mixture with one part household detergent with 10 parts water, (2) spraying the soap mixture on all exposed compressor seals, valves, fittings, and miscellaneous components, and (3) determining if "bubbles" are generated. If soap screening reveals the presence of a leak, additional screening will be conducted with a portable hydrocarbon analyzer. The analyzer will measure hydrocarbon concentrations in units of parts per million by volume (ppmv). Methane leaks are defined to be significant if the concentration exceeds 1000 ppmv. Screening for methane leaks will be conducted a minimum of two times during control test periods, and two additional times during continuous testing. Each screening exercise will be repeated three times such that a statistically valid data set can be produced (see Appendix B-4 for the field log form).

The U.S. EPA Protocol for Equipment Leak Emission Estimates will be followed if significant methane leaks are detected. The tent/bag method isolates the leaking component from ambient air, and directly measures the mass leak rate. A tent made of material impermeable to methane is constructed around the leak interface of the piece of equipment. A known rate of carrier gas is induced through the bag and a sample of the gas from the bag is collected and analyzed to determine the methane concentration using a gas chromatograph (GC). The GC is calibrated using gas standards with certified accuracy of $\pm$ 2 percent. Mass emissions are calculated based on the measured concentration and the flow rate of carrier gas through the bag. The Protocol contains detailed sampling and QA/QC procedures for conducting these measurements (Appendices B-5 and B-6). Field log forms to be completed are presented in Appendix B-7. The detailed guidance document will be available during testing.

4.5. DOCUMENTAION FOR TURBOGENERATOR OPERATIONAL PERFORMANCE

Turbogenerator availability determination requires differentiation to be made between scheduled downtime and unscheduled downtime. Scheduled downtimes are periods where the Turbogenerator is off-line due to scheduled maintenance or times when the Turbogenerator was available for operation but was not operated due to facility needs. These do not negatively impact the system's availability or reliability performance. Unscheduled downtime are periods when the facility wants and needs the Turbogenerator to generate electricity, but it is not available due to operational problems within the unit.

In order for this differentiation to be established, an accurate log of the downtime periods and their reason for occurrence is crucial. An audible alarm will be initiated whenever Turbogenerator operation is interrupted. After notation on the log form of the date and time of the initial Turbogenerator start-up, the following procedure will be followed at any change in Turbogenerator operational status, and information will be logged in the forms shown in Appendix B-8.

1. Record the date and time when the Turbogenerator operation is interrupted. Check on the form whether this is considered scheduled or unscheduled downtime, and write down specifically what caused the interruption.

2. Record the date and time when the Turbogenerator operation is resumed. Record the duration (length) of the interruption on the place indicated on the form. If this was unscheduled downtime and there were other reasons and problems than those listed in the space provided under Step 1, write down specifically the reasons and problems in space associated with this entry.

3. Repeat this procedure for any interruption in Turbogenerator operation. At the end of the test period, note the date and time on the log form and write "End of test" in this entry space.

4.5.1. Cold Start Time

Determination of cold start time is important in determining the suitability of this technology for use in peak shaving applications. To determine this parameter, the following procedures will be followed, and information will be logged in the forms shown in Appendix B-9.

1. The generator will be shut off (a scheduled downtime) at least eight (8) hours prior to the cold start test.

2. Immediately prior to the cold start test, the electrical load available at the facility will be determined to be greater than the 100 percent load capacity of the Turbogenerator (typically 75 kW). If the available load is less than the 100 percent load capacity of the Turbogenerator, the test will be postponed until a sufficient electrical load is available.

3. A stopwatch will be made ready to begin timing as soon as the Turbogenerator start-up is commenced.

4. Turbogenerator start-up will be initiated when the start command is given by the user to the SCADA. The stopwatch will begin timing immediately at that point.

5. Standard Turbogenerator start-up procedures will be followed (as detailed in the Operation Manual.)

6. As soon as the Turbogenerator start-up parameters are fulfilled (as detailed in the Operation Manual), the electrical load will be automatically loaded onto the generator. The observer with the stopwatch should note this from the load reading of the electrical meter.

7. When the Turbogenerator has supplied 100 percent of its rated load, the stopwatch timing is stopped and the length of the cold start-up time will be noted on the log sheet.

5.0 QUALITY CONTROL

5.1. POWER MEASUREMENTS

Three electric meters will be used to conduct power measurements for the Turbogenerator, Utility grid, and the natural gas booster compressor. A schematic of the instrument locations was shown earlier in Figure 4-1. All meters will continuously operate, unattended, after installation, and will not require further adjustments. QC procedures associated with instrument set up, calibration, and sensor diagnostics are discussed in Sections 4.1.2.

5.1.1. Installation and Set-Up

The power meters will be installed and setup according to the Installation and Basic Setup Instructions manuals provided by the manufacturers. The manuals contain detailed instructions on field wiring connections for power supply, ground connection, phase voltage inputs, phase current inputs, and communications. A listing of key installation and start-up checks is shown below.

1. Verify that the meter enclosure is mounted in a location to provide ventilation around the case in an area free of oil, moisture, excessive dust and corrosive vapors. All wiring will conform to applicable NEC standards.

2. Verify that the meter is connected to a source of electrical power within the range of 85 to 240 VAC $\pm$ 10 percent.

3. Verify that the meter is connected to the power output bus using 12 to 14 AWG wire directly connected to the terminals. The phase and polarity of the AC voltage inputs are critical to the correct operation of the unit, so the wiring will need to be checked using a digital multimeter to insure correct connection (see Appendix C-1 for log form).

4. Verify that the meter is connected to 10:1 ratio current transformers which will provide a maximum input of 20 amps for a current flow of 200 amps. The phase current connections will require 12 to 14 AWG wire.

5. Verify that the meter is connected to the on-site Ethernet network via the RJ-45 modular connector on the back of the meter.

6. Verify that 1 minute readings are collected, transmitted, and stored in the DAS.

7. Verify that the readings on each meter's digital display agree with the corresponding readings recorded in the DAS. If they do not agree, troubleshoot the communications link until proper readings are obtained by the DAS.

5.1.2. Sensor Diagnostics

1. In the SCADA *Generator Control* screen, select 100 percent load in the Power Command box and 1.0 in the Power Factor command box. Record these user specified settings in the log form (Appendix B-1).

2. Connect a DMM to the current transformers, and record a minimum of 5 individual voltage and current readings and compare them to the readings on the display of each meter.
3. Determine accuracy as the difference between the DMM reading and the 7600 ION reading divided by the DMM reading. Use statistical routine in Microsoft Excel to compute average accuracy for the run at a 95 percent confidence level. The computed average accuracy must be within ± 1 percent. If not, contact manufacturer, and resolve discrepancy.
4. Repeat above steps by changing the operating load to 50 percent. Data and calculations for each controlled test repetition will be maintained independently using the log forms provided in Appendix B-1.

5.1.3. Instrument Calibration

Prior to installation in the field, each instrument must be sent to the factory for calibration. Calibration certificates traceable to national standard must be obtained, and verified to ensure they met the accuracy goals specified in Table 3-2. Upon completion of the test, the meters must be re-calibrated.

5.2. FUEL FLOW MEASUREMENTS

5.2.1. Installation and Set-Up

Manufacturer's installation checks: Field installation procedures are well documented in Rosemount's "Model 3095 MV Product Manual", and will not be repeated here in entirety. Center testing personnel will follow all required procedures to ensure that checks for process connections, leaks, field wiring, and ground wiring are conducted properly. The Product Manual will be made available during installation. Following manual specifications, meter installation will be conducted using the following considerations:

- The meter will be installed vertically in the 1-inch diameter fuel line in a safe, accessible, and vibration free section of pipe.
- Installation will include sufficient straight run of pipe (no less than 20 diameters) upstream and downstream of the meter.
- Temperature sensors will be installed in the piping and wired to the transmitters for continuous temperature compensation.
- All mechanical connections will be leak checked.
- All electrical connections will be made following manufacturer specifications and tested.

5.2.2. Sensor Diagnostics

Manufacturer's setup and start-up checks: In each flow sensor element, a transmitter calculates mass from differential pressure across an integral orifice element. To perform this calculation, the transmitter electronics must be programmed with information on the gas being metered and the operating conditions. This is accomplished using Rosemount's Engineering Assistant (EA) Software, which is interfaced to the transmitter via a HART protocol serial modem. Specific setup parameters required in the EA are listed in Appendix C-3. The Center testing personnel will maintain field logs of all data entered into the EA, and subsequently transmitted to the instrument. An electronic copy of the configuration file will be maintained. Detailed guidelines are provided in the Product Manual.

Sensor function checks: A series of meter and transmitter function checks will be conducted before the verification period begins and again at the end of the testing. The following checks will be included.

- Power supply test to document that the facility DAS is supplying sufficient power (no less than 11 vDC) to the tranmitter.
- Analog output checks where a current of known amount will be checked against a secondary device to ensure that 4 mA and 20 mA signals are produced.
- Reasonableness checks will be performed by ensuring that the mA signal produced at the transmitter is recorded correctly in the DAS.
- Zero checks will be conducted by isolating the transmitter from the differential pressure taps using valves built into the meter, and recording the transmitter output. The sensor output must read 0 flow during these checks.

Procedures for performing these checks are documented in the Product Manual. Appendix C-4 identifies the records to be logged.

5.2.3. Independent Performance Checks

The Center will install a second Rosemount flow meter to perform independent performance checks on the primary meter. The secondary meter is identical to the primary meter, will be programmed with the same setup configuration, and subjected to the same diagnostic checks described above. The secondary meter will be installed in a bypass loop of piping that is configured upstream of the primary flow meter. Using a series of globe valves, the fuel gas will be directed through the bypass piping, and subsequently through both the primary and secondary meters simultaneously. The following procedures will be followed during this check:

- Document proper function of both meters using the diagnostic checks described above.
- Configure the piping valves to allow gas flow through both meters simultaneously.
- Record primary flow meter readings for a period of no less than 15 minutes using the facility DAS.
- Simultaneously record secondary flow meter readings for the same time period using the Hart modem and EA Software.
- Compare the meter outputs and document the percent difference in the readings.

5.2.4. Instrument Calibration

The meters should not require re-calibration over the duration of the test. Prior to installation in the field, each instrument must be sent to the factory for calibration. Calibration certificates traceable to national standard must be obtained, and verified to ensure they met the accuracy goals specified in Table 3-2. Upon completion of the test, the meters must be re-calibrated.

5.3. FUEL HEATING VALUE MEASUREMENTS

5.3.1. Sampling System Check Out Procedures

Pre-evacuated stainless steel canisters are supplied by the laboratory and shipped to the test location for sample collection. At the test site, the canister pressure will be checked using a vacuum gauge to document that the canisters are leak free. Canisters that are not fully evacuated upon receipt from the lab will not be used for sampling. During sampling, the connections between the canisters and the fuel sampling port will be screened with a hydrocarbon analyzer to check for leaks in the system. In addition,

the canisters will be purged with fuel for approximately 5 seconds to ensure that a pure fuel sample is collected (see sampling procedures in Section 4.2).

5.3.2. Instrument Calibration and Repeatability Determination

The GC is calibrated weekly as a continuing calibration verification check using a certified natural gas standard. Instrument accuracy is 0.02 percent full scale, but allowable method errors vary among gas constituents according to the following table.

Gas Constituent	Allowable Error (% Diff.)
nitrogen	2.0
methane	0.2
CO_2	3.0
ethane	1.0
propane	1.0
isobutane, n-butane	2.0
isopentane, n-pentane	3.0

The instrument is re-calibrated whenever its performance is outside of any of the acceptance limits listed. Calibration records will be obtained and reviewed by the Center. Records of the natural gas calibration standard will also be obtained.

Gas analyses will be repeated for each sample as required by the ASTM method. Records documenting repeatability results for LHV will be reviewed to ensure they are within ± 0.1%.

5.3.3. Independent Performance Check

Once during the sampling period, a certified natural gas standard will be procured and submitted to the laboratory for analysis. Results of this analysis will serve as an independent performance check of the laboratory analyses.

5.4. EMISSION RATE MEASUREMENTS

Please refer to Section 4.3.3 for detailed descriptions of the calibrations and quality control procedures for emission rate measurements.

5.5. GAS COMPRESSOR METHANE LEAK MEASUREMENTS

5.5.1. On Site QC Procedures

The EPA Protocol that will be followed to determine emission rates from leaks contains specific QC procedures to ensure method accuracy. These QC procedures, along with copies of data collection forms that Center personnel will use in the field, are presented as Appendices B-6 and B-7.

5.5.2. Instrument Calibration Procedures

A Bascom-Turner CGI-201 hydrocarbon analyzer will used to screen hydrocarbon concentrations. It is capable of detecting 4 to 100 percent total hydrocarbon concentration, with an accuracy of $\pm$ 2 percent of reading. The CGI-201 will be calibrated prior to each measurement trip. Calibrations will be performed in the laboratory using certified methane standards at 2.5, 25, 50, 75, and 100 percent methane. Calibration apparatus provided by the manufacturer (Part numbers MC-105 and PCA-001), and the manufacturer's calibration procedures will be followed. Manual records will be maintained in the log form shown in Appendix C-5.

The sensors will be calibrated separately using clean air (compressed zero air) as a zero reference and five certified methane reference gases including approximately 2.5, 25, 50, 75, and 100 percent methane with the balance of the gases being nitrogen.

Industry grade natural gas will be introduced to the meter using a pressure controlled regulator and teflon tubing. The tubing incorporates a "tee" so that excess calibration gas is dumped to the atmosphere to prevent over pressurizing the meter. The calibration procedure is to first zero the sensors using clean air and adjust (using the sensor with a potentiometer) if necessary. Next, the 2.5 percent reference is introduced and the meter self adjusts its low range sensor response to that gas. Next, the 100 percent reference is introduced to span the high range sensor. If necessary, adjustments are again made using a potentiometer to obtain the correct response. Finally, the remaining reference gases are introduced sequentially without making adjustments to the meter to verify linearity. If proper responses are unobtainable using the potentiometer or the responses are not linear, then either the sensor will be replaced or the meter will be sent to the manufacturer for service or repair.

In the field, the meters will be used to determine methane concentrations. Prior to use, the instrument will be turned on in the "zero instrument" mode, exposed to clean outdoor air, and allowed to self zero the sensors. The meter will be then turned to "read gas" mode and allowed to read the outdoor air to verify the zero reading. The probe tip will be manually plugged until the meter displays "bloc" to ensure that the probe is leak free. The meter is then ready for use. Hydrocarbon concentrations will be determined by inserting the probe tip into vent pipes where appropriate, or near suspected leak locations (e.g., flanges, valves, or fittings). A calibrated GC will be used to determine final methane concentrations in collected samples. The GC will be calibrated using certified gas standards.

The rotameter used to monitor gas flow rate through the bag will be calibrated against a laminar flow element (LFE). The LFE is factory calibrated annually using as primary standard. Calibrations are conducted using the LFE with a temperature transmitter and thermocouple, and oil manometer following the procedure outlined below.

- Assemble the rotameter in line with the LFE so that the calibration gas can be regulated to flow through both instruments.

- Connect the manometer to the LFE. Zero the manometer when no flow is occurring. When gas is allowed to flow through the LFE, the manometer will display a pressure drop across the instrument.

- Connect the Omega temperature transmitter to the in-line thermocouple.

- Record the barometric pressure and the ambient temperature in the log sheet.

- Open the flow regulator on the gas cylinder, and initiate gas flow into the rotameter and the LFE.

- Conduct a series of flow comparisons throughout the range of the rotameter. At each point, record the rotameter reading, gas temperature, pressure drop across the LFE, and the absolute pressure at the LFE inlet. Repeat the above procedures a second time to achieve duplicate calibration results.

- Determine the slope and y-intercept of the equation that relates gas flow readings from the rotameter to calibrated flow measured by the LFE.

5.6. METEOROLOGICAL DATA COLLECTION

5.6.1. Installation and Setup

Field installation procedures are detailed in the documentation provided for the integrated temperature/ humidity unit by Vaisala and for the pressure sensor by Setra and will not be discussed here. Center testing personnel will follow all required procedures to ensure that checks for appropriate installation locations, length of cable, process connections, leaks, field wiring and ground wiring are conducted properly, including:

- All wires will not be located near motors, power supply calbles, or other such electrically “noisy” equipment

- No hand-held radios will be used near the instruments

In each of these sensors, the parameter monitored creates a small electrical change in capacitance or resistance which corresponds to the variation in the monitored parameter. This change is measured, amplified and converted by the electronics package associated with each sensor. Unless catastrophic damage (which should be visible) has occurred to the sensors, their accuracy at setup should correspond precisely to the initial factory calibration performed before shipping. Visual checks for damage both before and after installation will be performed, and appropriateness checks of the outputs will be performed at start-up.

The signal inputs into the A/D module in the data acquisition computer are scaled and converted into the proper units and logged on the computer hard drive by a program provided by the A/D module manufacturer. The Center testing personnel will maintain field logs of all data entered into this program. An electronic copy of the configuration file will be maintained. Detailed guidelines are provided in the software Programming Manual.

5.6.2. Sensor function checks

Analog output checks will be conducted a minimum of 2 times during the test. In this loop test, a current of known quantity will be checked against a secondary device to ensure that 4 mA and 20 mA signals are

produced. Reasonableness checks will also be performed by ensuring that the signal produced at the transmitter is recorded correctly by the A/D module and the DAS computer.

Reasonablenes checks will be performed by examining the ambient temperature, pressure, and relative humidity recorded by the test instruments with those reported by the nearest national Weather Station at the Washington National Airport. All suspect data will be flagged, and the measurement instruments will be examined for damage or failure.

5.6.3. Instrument Calibration

Each sensor must be factory calibrated by their respective manufacturers before testing commences. Each calibration will be performed over the operating range of the instruments, provided with a NIST traceable calibration certificate, and confirmed to ensure the required accuracy goals were attained. These sensors should not require re-calibration over the duration of the test. Factory calibration may be repeated at the end of the test to ensure that instrument performance has not changed.

5.7. FUEL GAS PRESSURE

The Rosemount Model 3051 pressure transmitter will be used to monitor fuel gas line pressure upstream of the Parallon 75. This pressure transmitter is factory calibrated and designed to operate continuously and unattended. All manufacturer startup checks and sensor function checks will be conducted prior to the verification test period. Routine quality control checks consist of daily reasonableness checks to identify trends, spikes, or other changes in signal that can indicate a system or sensor problem.

5.8. INSTRUMENT TESTING, INSPECTION, AND MAINTENANCE REQUIREMENTS

The equipment used to collect verification data will be subject to the pre-and post-test QC checks discussed earlier. Before the equipment leaves the Center or TRC laboratories, each equipment will be assembled exactly as anticipated to be used in the field and fully tested for functionality. For example, all pumps, controllers, flow meters, computers, instruments, and other sub-components of the entire stack testing measurement system will be operated and calibrated as required by the reference methods. Any faulty sub-components will be repaired or replaced before being transported to the test site. A small amount of consumables and frequently needed spare parts will be maintained in the testing trailer. Major sub-component failures will be handled on a case-by-case basis (e.g., by renting replacement equipment or buying replacement parts).

The instruments used to make electric power measurements are new, and have been purchased for this verification. They will be inspected at the Center's laboratory prior to installation in the field to ensure all parts are in good condition. The equipment used to make flow measurements and ambient measurements are maintained by Center's Environmental Studies Group. The mass flow meters, temperature/humidity sensors, gas pressure sensor, and barometric pressure sensors will be shipped to the manufacturer for calibration prior to being transported to the test site.

The hydrocarbon analyzer and rotameter for methane leak rate measurements are also maintained by the Center's Environmental Studies Group. The analyzer will be calibrated at the Center's laboratory as discussed above. Calibration certificates for each cylinder gas will be obtained from the gas supplier. The rotameter will be calibrated against a laminar flow element as discussed above. Calibration certificate, traceable to NIST, for the laminar flow element is stored in Center's laboratory.

5.9. INSPECTION/ACCEPTANCE OF SUPPLIES AND CONSUMABLES

EPA Protocol gases will be used to calibrate the gaseous pollutant measurement system. Calibration gas concentrations meeting the levels stated in Section 4.3.3 will be generated from high concentration gases for each target compound using a dilution system. Per EPA Protocol gas specifications, the actual concentration must be within $\pm$ 2 percent of the certified tag value. Copies of the EPA Protocol gas certifications will be available on-site.

The calibration gases used to calibrate the hydrocarbon analyzer used for leak detection are instrument grade gases including pure nitrogen for zero, pure methane for full scale, and methane in nitrogen mixtures for mid-range checks (2.5 percent methane in N_2 and 50 percent methane in N_2). All gases and gas mixtures are analyzed and certified by the gas supplier.

6.0 DATA ACQUISITION, VALIDATION, AND REPORTING

6.1. DATA ACQUISITION AND STORAGE

6.1.1. Continuous Meters

All sensors to be used for continuous monitoring (Figure 6-1) will provide an electrical signal which can be interfaced to a computerized data acquisition system (DAS). Figure 6-1 lists the instruments that will be employed, and Table 6-1 summarizes the measurement that will be continuously logged.

Figure 6-1. Data Acquisition System Diagram

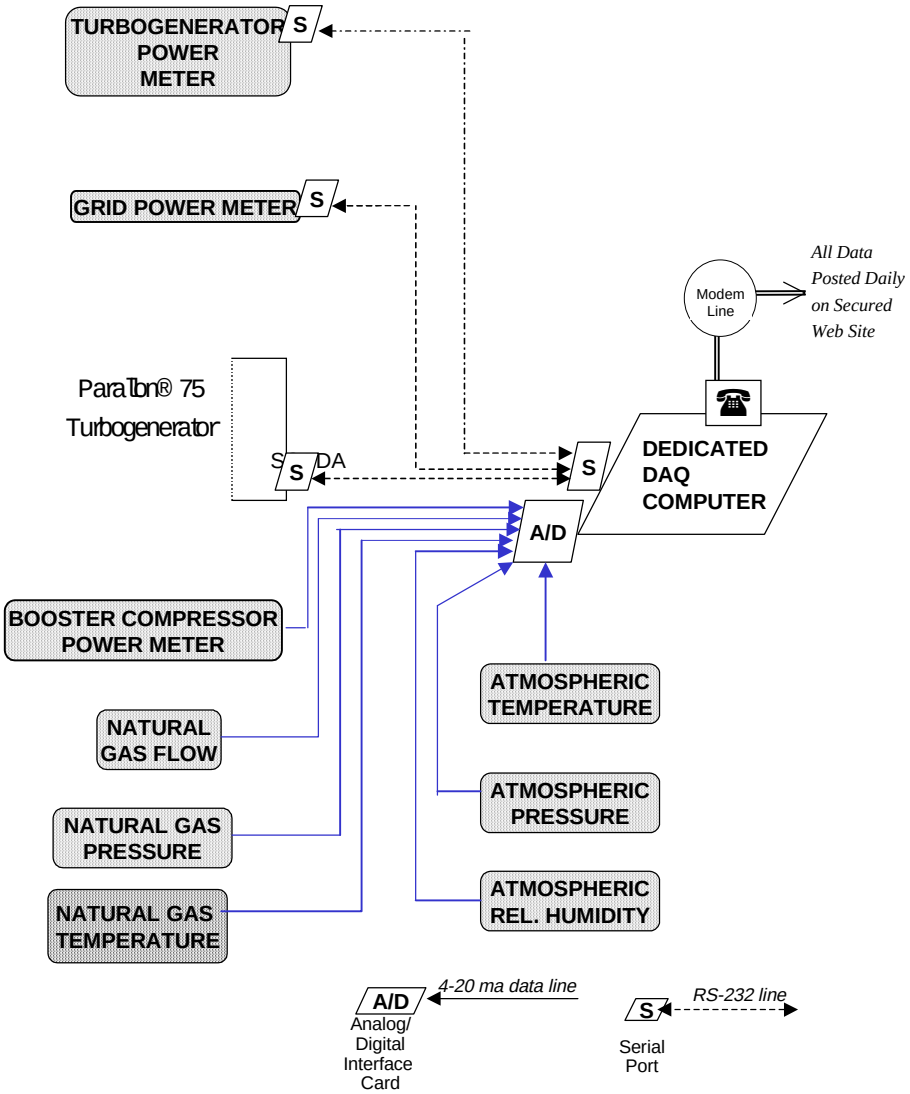

Table 6-1 Continuous Data to be Collected for Turbogenerator Evaluation

Sensor / Source	Measurement Parameter	Purpose[1]	Significance
Rosemount Integral Orifice Meter	Natural gas flow rate (scfm)	P	System performance parameter
Rosemount pressure transducer	Natural gas pressure (psi)	P	System performance parameter
Rosemount RTD[2]	Natural gas temperature (^oF)	P	System performance parameter
Vaisala Model HMP35A	Ambient temperature (^oF)	P	System performance parameter
	Ambient relative humidity (% RH)	P	System performance parameter
Setra Model 280E	Ambient pressure (in Hg)	P	System performance parameter
Power Measurement 7600 ION	Voltage Output (Volts)	P	System performance parameter
	Voltage Transients (Volts)	P	System performance parameters
	Amperage (Amps)	P	System performance parameter
	Power factor	P	System performance parameter
	Real Power (kW)	P	System performance parameter
	Kilovolt-amps reactive	P	System performance parameter
	Frequency (Hz)	P	System performance parameter
	Voltage THD (%)	P	System performance parameter
	Current THD (%)	P	System performance parameter
Turbogenerator input (SCADA)	Power Command (kW)	P	User input parameter
	Power Factor Command	P	User input parameter
	Time delay after grid loss before retry	P	User input parameter
	Start / Stop schedule	P	User input parameter
Turbogenerator output (SCADA)	Actual total power (kW)	D/S	System operational parameter
	Max. power available (kW)	D/S	System operational parameter
	Power factor	D/S	System operational parameter
	Frequency (Hz)	D/S	System operational parameter
	Voltage (Volts)	D/S	System operational parameter
	Actual engine speed (rpm)	D/S	System operational parameter
	Compressor inlet temp (^oF)	D/S	System operational parameter
	Recuperator outlet temp (^oF)	D/S	System operational parameter
	Turbine exit temp (^oF)	D/S	System operational parameter
	Grid warning (over/under frequency, over/under voltage)	D/S	System operational parameter
	Runtime hours	D/S	System operational parameter
	No. Emergency Stops	D/S	System operational parameter
	No. Protective Shutdowns	D/S	System operational parameter
Booster Compressor Power Consumption	Power (kW)	P	System Performance Parameter
Grid Power Meter	Voltage (Volts)	P	Documentation/Comparison
	Frequency (Hz)	P	Documentation/Comparison
	Power (kW)	P	Documentation/Comparison
	Power Factor	P	Documentation/Comparison
	Voltage THD (%)	P	Documentation/Comparison
	Current THD (%)	P	Documentation/Comparison

[1] D- Documentation/Diagnostic
P- Primary value, data points routinely evaluated
S- Secondary value, used as needed to perform comparisons and assess apparent abnormalities
[2] During flow meter calibration, the RTD input channel will be used to record flow measurements from the master meter

A dedicated Pentium-class computer will be made available at the test site, and used as the accumulation point for all of the data being continuously monitored. A storage directory will be assigned on the DAS computer which will maintain delimited ASCII files. Three separate data files will store the following measurement groups of data. All data will be time synchronized with the computer clock. (Note: the electric meters have built-in features to synchronize clocks every 2 hours.)

(1) 4 to 20 MA output (fuel flow rate, fuel pressure, fuel temperature, ambient temperature, relative humidity, barometric pressure, and booster compressor power consumption)
(2) Turbogenerator output stored through 7600 ION Pegasus software (power, voltage, current, power factor, frequency, and voltage/current THD)

(3) Grid output stored through Rochester software (power, voltage, current, power factor, frequency, and voltage/current THD)
(4) Turbogenerator SCADA output (see Table 6-1)

The natural gas flow meter, booster compressor power meter, and meteorological sensors consist of a signal conditioner/transmitter that produces a 4 to 20 mA linear output over the full scale of the sensors. These signals are transmitted to circuitry installed in the DAS computer which provides 12 bit analog to digital (A/D) conversion of the 4 to 20 mA signals. Each minute, the software associated with the A/D interface will log to the hard drive the input from each sensor. Raw data will be converted to actual measurements as shown below.

For natural gas mass flow:	*lbm/hr = (mA - 4)/16 * FS*
For natural gas pressure:	*psig = (mA - 4)/16 * FS*
For atmospheric pressure:	*in. Hg = (mA - 4)/16 * FS*
For atmospheric temperature:	*°F = (mA - 4)/16 * FS*
For atmospheric relative humidity:	*% R.H. = (mA - 4)/16 * FS*
For booster compressor power:	kW = *(mA - 4)/16 * FS*

where, mA is the mA output from the meter electronics and FS is the full-scale reading

The remaining verification instruments (7600 ION electrical power and grid power meter) and the Honeywell SCADA module will be connected to the DAS via an RS-232 line to three separate serial ports. Communication with the 7600 ION electrical power meter will be conducted via the PEGASYS® software supplied by the manufacturer. The software will convert, scale, and format the sensor inputs into the meter's microprocessor and electronics. Therefore, the readings of voltage, amperage, power factor, kilowatts, kilovolt-amps reactive, current frequency, and harmonics will be directly contained as such in a standard data format file transferred from the electrical power meter to the computer DAS. The 7600 ION has an on-board data memory which stores about 48 hours of 1 minute data. The 1 minute collected data are queried every hour and downloaded automatically to the DAS computer. A similar software system, supplied by Rochester, will be used to communicate with the grid power meter.

Communication with the SCADA system of the Turbogenerator will be conducted through a serial (RS-232) connection. The computer system internal to the SCADA is programmed to interface to the computer DAS as if the data were contained in a Web page. It is accessed through the use of Internet browser software on the DAS computer. The “non-critical” data obtained from the SCADA (e.g., actual engine speed, compressor inlet temp, max power available, power command, power factor offset command, power factor offset, total power, frequency, runtime hours, emergency stops, and protective shutdowns) will therefore be converted, scaled and formatted internally in the SCADA. This information will be saved in a standard data format file on the computer DAS.

Daily performance data files will be uploaded onto a secured website by CEEE technicians. The data files will be retrieved and stored in the hard-drive of a dedicated computer at the Center’s RTP office. The Center staff will review, validate, and verify the data, and generate summary statistics/trend plots to assess the Turbogenerator’s performance as discussed in Section 2.0 and check for unusual or changing conditions. The site will be notified for potential malfunctions of measurement instruments. Each week, hard copies of the daily data files will be stored onto a disk or CD. Record-keeping procedures, document control procedures, and data storage/retrieval procedures, outlined in Center’s QMP, will be followed.

During field testing, the Field Team Leader will retrieve, review, and validate the electronically collected data at the end of each load testing. To determine if the criteria for electrical efficiency determinations are met, time series power output, power factor, gas flow rate, ambient temperature, and ambient

pressure, will be processed using the statistical analysis tool in Microsoft Excel. If it is determined that maximum permissible limits for each variable, calculated at a 95 percent confidence level, is satisfied, the electrical efficiency measurement goal will be met. Conversely, the load testing will be repeated until maximum permissible limits are attained (Section 4.1). Data for this task will be maintained by computer and by handwritten entries. Observations and test run sheets will be recorded manually in a log form developed exclusively for this task (Appendix B-1). Disk copies of the Excel spreadsheet results will be made at the end of each day. The Field Team Leader will report the following results to the Project Manager:

- Power delivered at selected load
- Fuel flow rate at selected load
- Efficiency at selected load (estimated until gas analyses results are submitted)

Data quality assurance checks for the instruments illustrated in Figure 6-1 were discussed in Section 5.0. Manual and electronic records (as required) resulting from these checks will be maintained by the Field Team Leader.

After the completion of the control test, the manually recorded information will be maintained in labeled three-ring binders. The binders and electronic copies of data output and statistical analyses will be stored at the Center's RTP office per guidelines described in the Center's QMP.

6.1.2. Emission Measurements

Data measurement and collection activities will consist of initial pretest QA steps to the passing of the data to the Field Team Leader. TRC will use the Strawberry Tree STRATA Data Acquisition System (STRATA) to record the concentration signals from the individual monitors. STRATA will be the data acquisition system for the EPA instrumental test methods. The STRATA records instrument output at 1-second intervals, and will average those signals into 1-minute averages. At the conclusion of a test run, the pre-and post-test calibration results and test run values will be electronically transferred from STRATA into a Microsoft Excel spreadsheet for data calculations and averaging. The Field Team Leader will be informed of the results. Measurement system calibration and gaseous pollutant concentration measurements will be recorded on forms similar to the examples shown in Appendices A-4 through A-6.

TRC will report emission measurements results to the Field Team Leader as:

- Parts per million by volume (ppmv)
- ppmv corrected to 15 percent O_2
- Emission rate (lb/hr)

Upon completion of the field test activities, TRC will provide copies of records of calibration, pre-test checks (stratification, system response time, and NO_2 converter), and field test data to Field Team Leader prior to leaving the site. A formal report will be prepared by TRC and submitted to Center Field Team Leader within 3 weeks of completion of the field activities. The report will describe the test conditions, documentation of all QA/QC procedures, including copies of calibrations, certificates of calibration gases, and the results of the testing. Field data will be included as an appendix and an electronic copy of the report will be submitted. The submitted information will be stored at the Center's RTP office per guidelines defined in the QMP.

6.1.3. Fuel Gas Sampling

Fuel gas sampling procedures were discussed in Section 4.0, and QA/QC procedures were discussed in Section 5.3. The Field Team Leader will maintain manual fuel sampling logs and chain of custody records. After the field test, Core Laboratories will submit LHV results for each sample, calibration records, and repeatability test results to the Field Team Leader. The information submitted will be stored in labeled three-ring binders. The binders and electronic copies of data output and statistical analyses will be stored at the Center's RTP office per guidelines described in the Center's QMP. The Field Team Leader will compute the actual efficiency of controlled tests using Equation 1 and the LHV results. The results will be reported to the Project Manager.

6.1.4. Gas Compressor Leak Rate Measurements

Data measurement and collection activities will consist of initial pretest QA steps (e.g., analyzer calibration and zero check) prior to the quantification of the leak rate. Measurement system calibration and leak rate measurements will be recorded on data logs (Appendix B-7), and maintained in labeled binders. The binder will be stored at the Center's RTP office. The Field Team Leader will report the leak rate results to the Project Manager.

6.1.5. Operational Performance Measurements

Procedures for determining operational availability and cold-start time were discussed in Section 4.5. Records for operational availability will be maintained by CEEE technician in a labeled, three ring binder (see log form in Appendix B-8), and weekly communication regarding the operation of the Turbogenerator will be made with the Field Team Leader. At the conclusion of the verification period, the binder will be shipped to the Field Team Leader, and stored according to the Center's QMP guidelines. The Field Team Leader will compute the operational availability per Equation 14, and report the results to the Project Manager.

Cold-start determination will be conducted during control testing. The Field Team Leader will maintain manual records of the test results and QA/QC checks in a labeled binder, and report the average cold start time to the Project Manager. At the conclusion of the test, binder will be stored at the Center's RTP office per guidelines described in the QMP.

6.2. DATA REVIEW, VALIDATION, AND VERIFICATION

Data review and validation will primarily occur at the following stages:

- On-site following each test run – by the Field Team Leader
- On-site following completion of each load testing – by the Field Team Leader
- After fuel gas analyses results are submitted by Core Laboratories - by the Field Team Leader
- At GHG Center Office each week – by the Field Team Leader
- Before writing the draft verification test report – by the Project Manager
- During QA review of the draft report and audit of the data – by Center QA Manager

Upon review, all data collected will be classed as either valid, suspect, or invalid. The criteria used to review and validate the data will be QA/QC criteria specified in Table 3-3 and determination of DQI goals discussed in Section 3.2. In general, valid results are based on measurements meeting data quality objectives, and that were collected when an instrument was verified as being properly calibrated. Often

anomalous data are identified in the process of data review. All outlying or unusual values will be investigated in the field for control testing and weekly for continuous testing. Anomalous data may be considered suspect if no specific operational cause to invalidate the data are found. All data, valid, invalid, and suspect will be included in the final report. However, report conclusions will be based on valid data only. The reasons for excluding any data will be justified in the report. Suspect data may be included in the analyses, but may be given special treatment as specifically indicated. If the DQI goals cannot be met due to excessive data variability (e.g., ambient temperature), the data will be presented to the Project Manager and QA Manager. Based on this, a decision will be made to either continue the test or collect additional data or terminate the test and report the data obtained.

Those individuals responsible for onsite data review and validation are noted in Figure 6-1 and above. The QA Manager reviews and validates the data and the draft report using the Test/QA Plan and test methods. The data review and data audit will be conducted in accordance with Center's QMP. The procedures that will be followed are summarized in Section 6.5.

6.3. RECONCILIATION WITH DATA QUALITY OBJECTIVES

DQOs were defined in Section 3.1. The reconciliation of the results with the DQO will be evaluated using the DQI process. When the primary data is collected, the data will be reviewed to ensure that they are valid and are consistent with what was expected. In addition, the data will be reviewed to identify patterns, relationships, and potential anomalies. The quality of the data will be assessed in terms of accuracy and statistical significant as they relate to the stated DQI goals. Attainment of the DQI accuracy goals will be confirmed by analyzing the test data as described in Section 3.2. The statistical analysis will be done by the Project Manager at the conclusion of each load testing using Microsoft Excel's "Descriptive Statistics" routine. The accuracy will be calculated as the 95 percent confidence interval divided by the mean (unless an alternative scheme is specified.) If the accuracy goals were satisfied, it will be concluded that DQOs are met. Conversely, if the test is found to not meet the DQI goals for fuel flow rate or LHV, the DQO for electrical efficiency will be re-computed using Equation 1 and 3. Emissions testing DQOs will be met because tests will be repeated unless the DQI goals are not achieved.

Results from verification testing of the Honeywell Turbogenerator will be presented in a Verification Statement and a Verification Report as described in Section 6.5.4. All data and analyses performed will be transparent in the final report and the statement. In addition, potential limitations in the use of the data will be discussed, and correction actions taken in the field and its impact on data quality will be discussed.

6.4. ASSESSMENTS AND RESPONSE ACTIONS

The quality of the project and associated data are assessed within the project by the Field Team Leader, Project Manager, QA Manager, Center Director, and technical peer reviewers. Assessment and oversight of the quality for the project activities are performed through the review of data, memos, audits, and reports by the Project Manager and independently by the QA Manager.

The effectiveness of implementing the Test/QA Plan are assessed through project reviews, in-phase inspections, audits, and data quality assessment.

6.4.1. Project reviews

The review of project data and the writing of project reports are the responsibility of the Project Manager, who also is responsible for conducting the first complete assessment of the project. Although the project's data are reviewed by the project personnel and assessed to determine that the data meet the

measurement quality objectives, it is the Project Manager who must assure that overall the project activities meet the measurement and data quality objectives. The second review of the project is performed by the Center Director, who is responsible for ensuring that the project's activities adhere to the requirements of the program. The Center Director's review of the project will also include an assessment of the overall project operations to ensure that the Field Team Leader has the equipment, personnel, and resources to complete the project as required and to deliver data of known and defensible quality. The third review is that of the QA Manager, who is responsible for assuring that the program management systems are established and functioning as required by the QA Manual and corporate policy. The QA Manager is the final reviewer within the SRI organization, and is responsible for assuring that contractual requirements have been met.

The draft document is then reviewed by Honeywell, followed by an independent review by selected Stakeholders (minimum of 2 industry experty). The external peer reviews are conducted by technically competent persons who are familiar with the technical aspects of the project, but not involved with the conduct of project activities. The peer reviewers present to the Project Manager an accurate and independent appraisal of the technical aspects of the project. Further details on project review requirements can be found in the Center's QMP.

The draft report will then be submitted to EPA QA personnel, and all comments will be addressed by the project Manager. Following this review, the Verification Report and Statement will undergo various EPA management reviews, including EPA Pilot Manager, EPA ORD Laboratory Director, and EPA Technical Editor.

6.4.2. Inspections

Inspections may be conducted by the Field Team Leader, Project Manager, or QA Manager. Inspections assess activities that are considered important or critical to key activities of the project. These critical activities may include, but are not limited to, pre- and post-test calibrations, the data collection equipment, sample equipment preparation, sample analysis, or data reduction. Inspections are assessed with respect to the Test Plan or other established methods, and are documented in the field records. The results of the inspection are reported to the Project Manager and QA Manager. Any deficiencies or problems found during the inspections must be investigated and the results and responses or corrective actions reported in a Corrective Action Report (CAR). This report is discussed later in Section 6.5.3.

6.4.3. Audits

Independent systematic checks to determine the quality of the data will be performed on the activities of this project. These checks will consist of a system audit, performance evaluation audits, and data audits as described below. In addition, the internal quality control measurements will be used to assess the performance of the analytical methodology. The combination of these audits and the evaluation of the internal quality control data allow the assessment of the overall quality of the data for this project.

The QA Manager is responsible for ensuring the audits are conducted as required by the Test/QA Plan. Audit reports that describe problems and deviations from the procedures are prepared and distributed to the Field Team Leader. Any problems or deviations need to be corrected. The Field Team Leader is responsible for evaluating corrective action reports, taking appropriate and timely corrective actions, and informing the QA Manager of the action taken. The QA Manager is then responsible for ensuring that the corrective action was taken. A summary report of the findings and corrective actions is prepared and distributed to the Project Manager and Center Director.

6.4.3.1. Technical System Audit

The technical system audit (TSA) will be conducted by the QA Manager prior to the start of project activities. This audit will evaluate all components of the data gathering and management system to determine if these systems have been properly designed to meet the quality assurance objectives for this study. The TSA includes a careful review of the experimental design, the Test/QA Plan, and procedures. This review includes personnel qualifications, adequacy and safety of the facility and equipment, and the data management system.

The TSA begins with the review of study requirements, procedures, and experimental design to ensure that they can meet the data quality objectives for the study. During the system audit, the QA manager or designee will inspect the analytical activities and determine their adherence to the Test/QA Plan. The QA Manager or a designee reports any area of nonconformance to the Field Team Leader through an audit report. The audit report may contain corrective action recommendations. If so, follow-up inspections may be required and should be performed to ensure corrections actions are taken.

6.4.3.2. Performance Evaluation Audit

The performance evaluation audit (PEA) is designed to check the operation of the analytical system. The performance samples, obtained from the EPA QA Manager, will contain analytes at a known (determined) concentration and will be presented to the analyst in such a manner as to have the concentration of the PEA unknown (blind) to the analyst. Upon receiving the analytical data from the analyst, the EPA QA Manager will evaluate the performance data for compliance with the requirements of the project. The PEA will occur on-site during the field test. The method performance will also be assessed using the internal quality control samples: inserted into the analytical scheme. The specific measurement and data quality objectives for method performance samples have been described earlier.

The PEA will also require checking the operation of the flow meters (Test and Master). The gas sampling approaches will also be audited, and the QA Manager may choose to have the laboratory analyze a certified natural gas samples with known quality.

6.4.3.3. Audit of Data Quality

The audit of data quality (ADQ), an important component of a total system audit, is a critical evaluation of the measurement, processing, and evaluation steps to determine if systematic errors have been introduced. During the ADQ, the QA Manager, or designee, will randomly select approximately 10 percent of the data to be followed through the analysis and processing the data. The scope of the ADQ is to verify that the data-handling system is correct and to assess the quality of the data generated.

The ADQ, as part of the system audit, is not an evaluation of the reliability of the data presentation. The review of the data presentation is the responsibility of the Project Manager and the technical peer reviewer.

6.5. DOCUMENTATION AND REPORTS

During the different activities on this project, documentation and reporting of information to management and project personnel is critical. To insure the complete transfer of information to all parties involved in this project, the following field test documentation, QC documentation, corrective action/assessment report, and verification report/statements will be prepared.

6.5.1. Field Test Documentation

The Field Team Leader will record all field activities. The Test Leader reviews all data sheets and maintains them in an organized file. The required test information was described earlier in Section 6.1. The Field Team Leader will also maintain a field notebook that documents the activities of the field team each day and any deviations from the schedule, Test Plan, or any other significant event. This person will also maintain documentation for the continuos operation of the Turbine, after the field test is completed. Any problems found during testing requiring corrective action will be reported immediately by the field test personnel to the Field Team Leader through a Corrective Action Report. The Field Team Leader will document this in the project files and report it to the Project Manager and QA Manager.

Following each test run, the Project Manager will check the test results with the assistance of the Field Team Leader to determine whether the run met the method QA criteria. Following this review and confirmation that the appropriate data were collected and DQOs were satisfied, the Center Director will be notified.

At the end of each test day, the Field Team Leader will collect all of the data from the field team members, which will include data sheets, data printouts, back-up copies of electronic files stored on computer, and field notebook. A copy of the field test documentation will be submitted to the Project Manager, and originals will be stored in the project records, as required by the QMP.

6.5.2. QC Documentation

After the completion of verification tests, test data, sampling logs, calibration records, certificates of calibration, and other relevant information will be stored in the project file in Center's RTP office. Calibration records will include information about the instrument being calibrated, raw calibration data, calibration equations, analyzer identifications, calibration dates, calibration standards used and their traceabilities, calibration equipment, and staff conducting the calibration. These records will be used to prepare the Data Quality section in the Verification Report, and made available to the QA Manager during audits.

6.5.3. Corrective Action and Assessment Reports

A corrective action is the process that occurs when the result of an audit or quality control measurement is shown to be unsatisfactory, as defined by the data quality objectives or by the measurement objectives for each task. The corrective action process involves the Field Team Leader, Project Manager, and QA Manager. In cases involving the analytical process, the correction action will also involve the analyst. A written Corrective Action Report is required on all corrective actions (Figure 6-2).

Since the tasks of this study involve a validations process to ensure data quality for the technology being verified, predetermined limits for the data acceptability have been established in the measurement and data quality objectives. Therefore, data determined to deviate from these objectives require evaluation through immediate corrective action process. Immediate corrective action responds quickly to improper procedures, indications of malfunctioning equipment, or suspicious data. The analyst, as a result of calibration checks and internal quality control sample analyses, will most frequently identify the need for such an action. The Field Team Leader will be notified of the problem immediately. The Field Team Leader will then notify the Project Manager, who will take and document appropriate action. The Project Manager is responsible for and is authorized to halt the work if it is determined that a serious problem exists.

Figure 6-2. Corrective Action Report

Corrective Action Report

Verification Title: _____
Verification Description: _____

Description of Problem: _____

_____

_____

_____

Originator: _____ **Date:** _____

Investigation and Results: _____

_____

_____

_____

Investigator: _____ **Date:** _____

Corrective Action Taken: _____

_____

_____

_____

Originator: _____ **Date:** _____
Approver: _____ **Date:** _____

Carbon copy: Project Manager, Center Director, Center QA Manager, Pilot Manager

The Field Team Leader is responsible for implementing corrective actions identified by the Project manager, and and is authorized to implement any procedures to prevent the recurrent of problems.

After technical assessments, the QA manager will submit the Assessment Report to the Project Manager and Center Director. The Project Manager will submit the Assessment Report to the EPA Pilot Manager and QA Manager for information purposes.

The results of TSAs, inspections, PEAs, and ADQs conducted by the QA Manager will be routed to the Project Manager for review, comments, and corrective action. The results will be documented in the project records. The Project Manager will take any necessary corrective action needed and will respond via the Corrective Action Report to the QA Manager. Inspections conducted by the QA Manager will be reported to the Project Manager in the same manner as other audits. The results of all assessments, audits, inspections, and corrective actions for the task will be summarized and used in the Data Quality section in the final report.

6.5.4. Verification Report and Verification Statement

A draft Verification Report and Statement will be prepared within 6 weeks of completing the field test by the Project Manager. The Project Manager will submit the draft verification report and statement to the QA Manager and Center Director for review. The final Verification Report will contain a Verification Statement, which is a 3 to 4 page summary of the Turbogenerator system, the test strategy used, and the verification results obtained. The Verification Report will summarize the results for each verification parameter discussed in Section 2.0 and will contain sufficient raw data to support findings and allow others to assess data trends, completeness, and quality. Clear statements will be provided which characterize the performance of the verification parameters identified in Section 1 and 2. A preliminary outline of the report is shown below.

Preliminary Verification Report Outline

Verification Statement

Section 1: *Verification Test Design and Description*
Description of the ETV program
Turbogenerator system and site description
Overview of the verification parameters and evaluation strategies

Section 2: *Results*
Power production performance
Power quality performance
Operational performance
Emissions performance

Section 3: *Data Quality*

Section 4: *Additional Technical and Performance Data (optional) supplied by Honeywell*

Appendices: Raw Verification and Other Data

The report will then be submitted to Honeywell for review, and after modifications are made, will be submitted simultaneously to at least two representatives of the Center's Oil and Gas and Electricity

Generation Stakeholder Groups, and the U.S. EPA Quality Assurance Team. When the final draft is prepared, officials from U.S. EPA's Office of Research and Development and the GHG Center will sign the Verification Statement. The report and statement will be posted on the Center's and ETV web sites, and copies will be distributed to the reviewers.

6.6. TRAINING AND QUALIFICATIONS

The Center's Field Team Leader has extensive experience (+15 years) in field testing of air emissions from gas turbines, and Field Support person has over +20 years experience conducting power measurements. They are familiar with the requirements of all of the test methods and standards that will be used in the verification test. The Project Manager has performed numerous field verifications under the ETV program, and is familiar with requirements mandated by the EPA and Center QMPs. The QA Manager is an independently appointed individual whose responsibility is to ensure the Center's activities are performed according to the EPA approved QMP. The participants working on behalf of the Center in support of this verification are selected by the Center and evaluated by EPA. Evaluation criteria include relevant education, work experience, and experience in quality management. These qualifications are documented in project personnel resumes and files, as required by the Center's QMP. Each field crew member will be thoroughly familiar with this Test Plan, the measurement equipment, procedures, and method for their assigned jobs. All field test personnel will receive a safety briefing by the Center Field Team Leader.

The nature of the tests to be performed do not require formal certifications by state, federal, or local authorities. However, special software training was obtained from Rosemount, Power Measurements, and Rochester to install, configure, and operate their instruments. The Center has used the Rosemount mass flow meter in past verifications, and is familiar with its operation and QA/QC requirements.

6.7. HEALTH AND SAFETY

This Section applies to Center personnel only. Other organizations involved in the project have their own health and safety plans specific to their roles in the project.

All work conducted as a part of this verification test will conform to applicable OSHA safety standards. All contractors and sub-contractors which may be used to perform such work must agree to meet or exceed these standards in their project work.

All electrical installations and connections will be performed by an electrician licensed in the State of Maryland. All electrical equipment and connections installed, as a part of this test will be conducted in accordance with the National Electrical Code (NEC) or state and local electrical codes, whichever are most stringent. All mechanical and gas installation and connections will conform to applicable ASME and ANSI codes, or applicable state and local codes, whichever are most stringent.

7.0 REFERENCES

American Society of Mechanical Engineers, *Performance Test Code on Gas Turbines (PTC-22-1997)*, New York, New York, 1997.

Code of Federal Regulations, Title 40, Part 60 (Subpart GG), *Standards of Performance for Stationary Gas Turbines*, United Environmental Protection Agency, Washington, D.C. 1999.

Energy Information Administration, *Annual Utility Plant Operations and Design Data (EIA-767 data file)*, http://www.eia.doe.gov/cneaf/electricity, 2000a.

Energy Information Administration, *Annual Electric Utility Data (EIA-861 data file)*, http://www.eia.doe.gov/cneaf/electricity, 2000b.

Federal Energy Regulatory Commission, *Electric Utility Annual Report (FERC Form No. 1)*, http://www.ferc.fed.us/electric, August 2000.

Institute of Electrical and Electronics Engineers, *IEEE Recommended Practices and Requirements for Harmonic Control in Electrical Power Systems*, IEEE Std 519-1992, New York, New York, April 1993.

Southern Research Institute. *Evaluation of the High Volume Collection System (HVCS) for Quantifying Fugitive Organic Vapor Leaks*, EPA/600/SR-95/167, February 1996.

Southern Research Institute. *Environmental Technology Verification Greenhouse Gas Technology Verification Quality Management Plan, Research Triangle Park*, NC, October 1998.

U.S. Department of Energy. *Sector-Specific Issues and Reporting Methodologies Supporting the General Guidelines for the Voluntary Reporting of Greenhouse Gases under Section 1605(b) of the Energy Policy Act of 1992*, DOE/PO-0028, Volume 1, Washington D.C., October 1994.

U.S. Department of Energy and U.S. Environmental Protection Agency. *Carbon Dioxide Emissions from the Generation of Electric Power in the United States*, http://www.eia.doe.gov/cneaf/electricity, July 2000.

U.S. Environmental Protection Agency. *Protocol for Equipment Leak Emissions Estimates*, EPA-453/R-93-026, June 1993.

US Environmental Protection Agency, *The Emissions and Generation Resource Integrated Database*, http://www.epa.gov/acidrain/egrid/egrid.html, January 2000.

APPENDIX A
Example Test Data Output

Page

Appendix A-1. Meteorological Data Summary for Washington National Airport Area A-2
Appendix A-2. Example of Core Laboratories Gas Analysis Results..... A-3
Appendix A-3. Example of Core Laboratories Calibration Data A-4
Appendix A-4. Example of Exhaust Stack Emission Rate Results..... A-5
Appendix A-5. Example of Exhaust Stack Raw Emission Measurements Data..... A-6
Appendix A-6. Example of Exhaust Stack Emission Measurements Calibration Data A-7

Appendix A-1. Meteorological Data Summary for Washington National Airport Area
Elevation - 60 ft. above sea level
(1999)

24 HOUR DAILY AVERAGES							
	Temperature (^{o}F)			**Relative Humidity (%)**			**Barometric Pressure (in.)**
	Daily Min.	Daily Max.	Avg. Monthly	Daily Min.	Daily Max.	Avg. Monthly	Avg. Monthly
November	44	62	53	55	79	67	30.08
December	35	49	42	53	71	62	30.06
January	30	46	38	57	77	65	30.11
8:00 AM – 6:00 PM AVERAGES							
November	32	76	54	28	100	63	30.11
December	21	67	43	23	100	60	30.08
January	18	69	39	21	100	63	30.06
Source: National Climatic Data Center							

Appendix A-2. Example of Core Laboratories Gas Analysis Results

SENT BY:CORE LABORATORIES ; 8-02 ; HOUSTON PETROLEUM ; 713 690 2306;# 6/ 6

CORE LABORATORIES

EXAMPLE RRT

LABORATORY TESTS RESULTS

JOB NUMBER: [redacted] CUSTOMER: [redacted]

CLIENT I.D.....:
DATE SAMPLED.....:
TIME SAMPLED.....:
WORK DESCRIPTION....:

LABORATORY I.D....:
DATE RECEIVED.....:
TIME RECEIVED.....:
REMARKS.....:

TEST DESCRIPTION	FINAL RESULT	LIMITS/TOLERANCE	UNITS OF MEASURE	TEST METHOD	DATE	TECH
Natural Gas Analysis		*1		ASTM D-1945	[redacted]	
Oxygen	0.08	0.01	Mol %	ASTM D-1945		
Nitrogen	0.80	0.01	Mol %	ASTM D-1945		
Carbon Dioxide	12.03	0.01	Mol %	ASTM D-1945		
Methane	79.42	0.01	Mol %	ASTM D-1945		
Ethane	5.38	0.01	Mol %	ASTM D-1945		
Propane	1.81	0.01	Mol %	ASTM D-1945		
Isobutane	0.12	0.01	Mol %	ASTM D-1945		
n-Butane	0.20	0.01	Mol %	ASTM D-1945		
Isopentane	0.02	0.01	Mol %	ASTM D-1945		
n-Pentane	0.09	0.01	Mol %	ASTM D-1945		
Hexanes Plus	0.05	0.01	Mol %	ASTM D-1945		
Total	100.00	0.01	Mol %			
Relative Density	0.72728	0		ASTM D-3588		
Compressibility Factor	0.99729	0		ASTM D-3588		
Gross Heating Value (Dry)	963.0	0	BTU/CF (Real)	ASTM D-3588		
Pressure Base	14.696	0	psia			
Sample Collection Pressure	596.4	1	psi	Field		
Sample Collection Temperature	59.53	1	Deg. F.	Field		

Note: Both high and low (gross & net) H.V. can be reported as required

P O BOX 34766
HOUSTON, TX 77234-4282
(713) 943-9776

PAGE:1

Appendix A-3. Example of Core Laboratories Calibration Data

LCN 3619

Sheet1

24-Jul	TRUE	MEAS	NORMAL	[A-B]	%DIFF	ALLOWED	OK
HELIUM	0.546	0.546	0.546	0.000		N/A	NOT OK
OXYGEN	0.001	0	0.000	0.001			
NITROGEN	4.93	4.93	4.930	0.000	0.0	2.0	OK
METHANE	70.414	70.414	70.413	0.001	0.0	0.2	OK
CO2	0.997	0.997	0.997	0.000	0.0	3.0	OK
ETHANE	9.009	9.008	9.008	0.001	0.0	1.0	OK
PROPANE	6.085	6.085	6.085	0.000	0.0	1.0	OK
ISOBUTANE	3.02	3.02	3.020	0.000	0.0	2.0	OK
N-BUTANE	2.992	2.992	2.992	0.000	0.0	2.0	OK
ISOPENTANE	1.005	1.005	1.005	0.000	0.0	3.0	OK
N-PENTANE	1.004	1.004	1.004	0.000	0.0	3.0	OK
	100.003	100.001	100.000				

Natural Gas Std

Analyzed weekly as a Continuing Calibration (CCV) Verification check. Instrument is recalibrated if outside acceptance limits

Page 1

Appendix A-4. Example of Exhaust Stack Emission Rate Results

Example Summary of Results
Turbine Generator

Company: XYZ
Plant: Power Prodcution Facility
Location: Florida
Technicians: LJB, RPO, DLD
Source: a Solar Centaur T-4500 Gas Turbine Generator Set

Test Number	**1C-1**	**1C-2**	**1C-3**	
Date	xx/xx/xx	xx/xx/xx	xx/xx	
Start Time	xx:xx	xx:xx	xx:xx	
Stop Time	xx:xx	xx:xx	xx:xx	
Power Turbine Operation				*Averages*
Generator Output (kW, kilowatts)	2820	2830	2820	*2823*
Percent Load (% of mfg.'s rated capacity of 2970 kW)	94.9	95.3	94.9	*95.1*
Ammeter (AC Amperes)	386	386	390	*387*
Voltmeter (AC Volts)	437	433	433	*434*
Frequency Meter (Hz, herz)	60.4	60.4	60.4	*60.4*
Power Factor Meter (Below 100 is lag)	96.4	96.6	96.4	*96.5*
Engine Speed (%, NGP)	100.2	100.1	100.1	*100.1*
Engine Compressor Discharge Pressure (psia, PCD)	130.0	129.5	130.0	*129.8*
Mean Turbine Exhaust Temperature (°F, T-5)	1161	1160	1160	*1160*
Turbine Fuel Data (Landfill Gas)				
Fuel Heating Value (Btu/SCF, HHV)	631.6	631.6	631.6	*631.6*
Fuel Specific Gravity	0.8817	0.8817	0.8817	*0.8817*
O_2 "F-factor" (DSCFex/MMBtu @ 0% excess air)	9150	9150	9150	*9150*
CO_2 "F-factor" (DSCFex/MMBtu @ 0% excess air)	1501	1501	1501	*1501*
Fuel Flow (scfm, landfill gas)	1167.2	1164.3	1164.8	*1165.4*
Heat Input (MMBtu/hr, Higher Heat Value)	44.23	44.12	44.14	*44.17*
Heat Input (MMBtu/hr, Lower Heat Value)	39.8	39.7	39.7	*39.7*
Brake-specific Fuel Consumption (Btu/kW-hr)	14,117	14,032	14,088	*14,079*
Ambient Conditions				
Atmospheric Pressure ("Hg)	29.93	29.93	29.89	*29.92*
Temperature (°F): Dry bulb	83.4	83.1	80.1	*82.2*
(°F): Wet bulb	69.9	69.9	69.0	*69.6*
Humidity (lbs moisture/lb of air)	0.0122	0.0123	0.0123	*0.0123*
Measured Emissions				
NO_x (ppmv, dry basis)	31.03	31.15	31.28	*31.15*
NO_x (ppmv, dry @ 15% O_2)	46.1	47.2	46.3	*46.5*
SO_2 (ppmv, dry basis via EPA Method 6c)	1.10	1.13	1.28	*1.17*
SO_2 (ppmv, dry @ 15% O_2)	1.63	1.71	1.89	*1.75*
CO (ppmv, dry basis)	9.94	9.80	9.81	*9.85*
THC (ppmv, wet basis)	1.62	1.63	1.75	*1.67*
Visible Emissions (% opacity)		0		0
H_2O (% volume, from Method 4 sample train)	5.55	5.37	5.30	5.41
O_2 (% volume, dry basis)	16.93	17.01	16.91	*16.95*
CO_2 (% volume, dry basis)	3.26	3.29	3.25	*3.27*
Stack Volumetric Flow Rates				
via EPA Method 2, pitot tube (SCFH, dry basis)	2.17E+06	2.12E+06	2.22E+06	*2.17E+06*
via O_2 "F_d-factor" (SCFH, dry basis)	2.13E+06	2.17E+06	2.12E+06	*2.14E+06*
via CO_2 "F_c-factor" (SCFH, dry basis)	2.04E+06	2.01E+06	2.04E+06	*2.03E+06*
Calculated Emission Rates (via M-19 O_2 "F-factor")				
NO_x (lbs/hr)	8.05	7.90	8.29	*8.08*
CO (lbs/hr)	1.57	1.51	1.58	*1.56*
THC (lbs/hr)	0.16	0.15	0.17	*0.16*
SO_2 (lbs/hr)	0.40	0.40	0.47	*0.42*
NO_x (tons/yr)	35.3	34.6	36.3	*35.4*
CO (tons/yr)	6.88	6.63	6.93	*6.82*
THC (tons/yr)	0.68	0.00	0.75	*0.48*
SO_2 (tons/yr)	1.74	1.75	2.07	*1.85*

Testing by Cubix Corporation - Austin, Texas - Gainesville, Florida

Appendix A-5. Example of Exhaust Stack Raw Emission Measurements Data

Unit R-2, Logged Data Records

Run Number	Date	Time	NO_x (ppmv)	O_2 (% vol)	CO_2 (% vol)	AVE NO_x (ppmv)	AVE O_2 (% vol)	AVE CO_2 (% vol)
START Run 2C-3	4/10/2000	1:51:57 PM	8.22	16.41	2.58	8.22	16.41	2.58
Run 2C-3	4/10/2000	1:52:57 PM	8.22	16.42	2.60	8.22	16.41	2.59
Run 2C-3	4/10/2000	1:53:57 PM	8.10	16.42	2.58	8.18	16.41	2.59
Run 2C-3	4/10/2000	1:54:57 PM	8.22	16.43	2.56	8.19	16.42	2.58
Run 2C-3	4/10/2000	1:55:57 PM	8.26	16.43	2.56	8.21	16.42	2.58
Run 2C-3	4/10/2000	1:56:57 PM	8.09	16.38	2.58	8.19	16.41	2.58
Run 2C-3	4/10/2000	1:57:57 PM	8.17	16.39	2.59	8.18	16.41	2.58
Run 2C-3	4/10/2000	1:58:57 PM	8.24	16.30	2.64	8.19	16.40	2.59
Run 2C-3	4/10/2000	1:59:57 PM	8.30	16.31	2.62	8.20	16.39	2.59
Run 2C-3	4/10/2000	2:00:57 PM	9.68	16.08	2.75	8.35	16.35	2.61
Run 2C-3	4/10/2000	2:01:56 PM	9.41	16.07	2.74	8.45	16.33	2.62
Run 2C-3	4/10/2000	2:02:56 PM	10.38	16.07	2.74	8.61	16.31	2.63
Run 2C-3	4/10/2000	2:03:56 PM	10.29	16.07	2.74	8.74	16.29	2.64
Run 2C-3	4/10/2000	2:04:56 PM	10.68	16.11	2.72	8.88	16.28	2.64
Run 2C-3	4/10/2000	2:05:56 PM	11.11	16.11	2.72	9.02	16.27	2.65
Run 2C-3	4/10/2000	2:06:56 PM	11.53	16.15	2.71	9.18	16.26	2.65
END Run 2C-3	4/10/2000	2:07:56 PM	11.87	16.15	2.71	**9.34**	**16.25**	**2.65**
START Run 2C-4	4/10/2000	2:17:36 PM	15.32	16.07	2.79	15.32	16.07	2.79
Run 2C-4	4/10/2000	2:18:36 PM	14.96	16.09	2.83	15.14	16.08	2.81
Run 2C-4	4/10/2000	2:19:36 PM	15.01	16.09	2.83	15.10	16.09	2.82
Run 2C-4	4/10/2000	2:20:36 PM	14.58	16.09	2.85	14.97	16.09	2.82
Run 2C-4	4/10/2000	2:21:36 PM	14.46	16.09	2.86	14.87	16.09	2.83
Run 2C-4	4/10/2000	2:22:36 PM	13.85	16.11	2.84	14.70	16.09	2.83
Run 2C-4	4/10/2000	2:23:36 PM	13.65	16.11	2.83	14.55	16.09	2.83
Run 2C-4	4/10/2000	2:24:36 PM	13.08	16.16	2.80	14.36	16.10	2.83
Run 2C-4	4/10/2000	2:25:36 PM	12.95	16.17	2.79	14.21	16.11	2.83
Run 2C-4	4/10/2000	2:26:36 PM	12.54	16.24	2.76	14.04	16.12	2.82
Run 2C-4	4/10/2000	2:27:36 PM	12.27	16.25	2.76	13.88	16.14	2.81
Run 2C-4	4/10/2000	2:28:36 PM	12.42	16.31	2.73	13.76	16.15	2.81
Run 2C-4	4/10/2000	2:29:36 PM	12.18	16.32	2.74	13.64	16.16	2.80
Run 2C-4	4/10/2000	2:30:36 PM	12.38	16.37	2.70	13.55	16.18	2.79
Run 2C-4	4/10/2000	2:31:36 PM	12.33	16.37	2.73	13.46	16.19	2.79
Run 2C-4	4/10/2000	2:32:36 PM	12.50	16.41	2.70	13.40	16.20	2.79
END Run 2C-4	4/10/2000	2:33:35 PM	12.29	16.41	2.69	**13.34**	**16.22**	**2.78**
START Run 2C-5	4/10/2000	2:42:03 PM	12.46	16.40	2.74	12.46	16.40	2.74
Run 2C-5	4/10/2000	2:43:03 PM	12.16	16.40	2.76	12.31	16.40	2.75
Run 2C-5	4/10/2000	2:44:04 PM	12.35	16.41	2.75	12.33	16.40	2.75
Run 2C-5	4/10/2000	2:45:03 PM	12.38	16.37	2.77	12.34	16.40	2.75
Run 2C-5	4/10/2000	2:46:03 PM	12.30	16.37	2.77	12.33	16.39	2.76
Run 2C-5	4/10/2000	2:47:03 PM	12.45	16.34	2.77	12.35	16.38	2.76
Run 2C-5	4/10/2000	2:48:03 PM	12.43	16.34	2.76	12.36	16.37	2.76
Run 2C-5	4/10/2000	2:49:03 PM	12.76	16.29	2.79	12.41	16.36	2.76
Run 2C-5	4/10/2000	2:50:03 PM	12.27	16.29	2.77	12.40	16.36	2.76
Run 2C-5	4/10/2000	2:51:03 PM	13.47	16.21	2.80	12.50	16.34	2.77
Run 2C-5	4/10/2000	2:52:03 PM	13.47	16.20	2.78	12.59	16.33	2.77
Run 2C-5	4/10/2000	2:53:03 PM	14.57	16.16	2.92	12.76	16.31	2.78
Run 2C-5	4/10/2000	2:54:03 PM	14.43	16.14	2.81	12.89	16.30	2.78
Run 2C-5	4/10/2000	2:55:03 PM	14.62	16.14	2.82	13.01	16.29	2.79
Run 2C-5	4/10/2000	2:56:03 PM	14.59	16.15	2.80	13.11	16.28	2.79
Run 2C-5	4/10/2000	2:57:03 PM	14.84	16.16	2.79	13.22	16.27	2.79
END Run 2C-5	4/10/2000	2:58:03 PM	15.35	16.17	2.79	**13.35**	**16.27**	**2.79**

Testing by Cubix Corporation - Austin, Texas - Gainesville, Florida R2-2

Unit R-2, Logged QA Calibration Records

Run 2C-3 4/10/2000 1:51:56 PM 2:07:56 PM

Initial Linearity Test	Zero	Low	Mid	Span	L-Lin	M-Lin	S-Lin
NOx (ppmv)	0	13.57	45.92	23.52	0.22	-0.84	-0.06
O2 (%)	0.09	4.64	12.03	20.68	-0.69	-0.07	0.47
CO2 (%)	0	8.01	12.45	4.57	-0.14	0.55	-0.34

Initial and Final Bias and Drift	I-Zero	I-Span	F-Zero	F-Span	Z-Bias	S-Bias	Z-Drift	S-Drift
NOx (ppmv)	0.08	24.14	0.07	24.34	0.14	1.64	0.02	-0.4
O2 (%)	0.25	20.83	0.24	20.84	0.58	0.63	0.06	-0.03
CO2 (%)	-0.15	4.28	-0.24	4.23	-1.63	-2.3	0.64	0.36

Run Results and Cal Gases Used	Raw	Corrected	Ranges	Low Gas	Mid Gas	Span Gas
NOx (ppmv)	9.34	9.01	50	13.68	45.5	23.49
O2 (%)	16.25	16.17	25	4.47	12.01	20.8
CO2 (%)	2.65	2.89	15	7.99	12.53	4.52

Run 2C-4 4/10/2000 2:17:35 PM 2:33:35 PM

Initial Linearity Test	Zero	Low	Mid	Span	L-Lin	M-Lin	S-Lin
NOx (ppmv)	0	13.57	45.92	23.52	0.22	-0.84	-0.06
O2 (%)	0.09	4.64	12.03	20.68	-0.69	-0.07	0.47
CO2 (%)	0	8.01	12.45	4.57	-0.14	0.55	-0.34

Initial and Final Bias and Drift	I-Zero	I-Span	F-Zero	F-Span	Z-Bias	S-Bias	Z-Drift	S-Drift
NOx (ppmv)	0.07	24.34	0.09	24.45	0.18	1.86	-0.04	-0.22
O2 (%)	0.24	20.84	0.28	20.89	0.75	0.81	-0.17	-0.18
CO2 (%)	-0.24	4.23	-0.15	4.35	-1.03	-1.44	-0.6	-0.86

Run Results and Cal Gases Used	Raw	Corrected	Ranges	Low Gas	Mid Gas	Span Gas
NOx (ppmv)	13.34	12.81	50	13.68	45.5	23.49
O2 (%)	16.22	16.11	25	4.47	12.01	20.8
CO2 (%)	2.78	3.00	15	7.99	12.53	4.52

Testing by Cubix Corporation - Austin, Texas - Gainesville, Florida R2-2

APPENDIX B
Field Testing Log Forms

		Page
Appendix B-1.	Control Test Log	B-2
Appendix B-2.	Fuel Sampling Log	B-3
Appendix B-3.	Fuel Sampling Chain of Custody Record	B-4
Appendix B-4.	Gas Compressor Leak Screening Log	B-5
Appendix B-5.	Sampling Procedures for Equipment Leak Rates	B-6
Appendix B-6.	QC Procedures for Equipment Leak Rates	B-7
Appendix B-7.	Gas Compressor Leak Measurement Log	B-8
Appendix B-8.	Turbogenerator Start/Stop Log	B-9
Appendix B-9.	Turbogenerator Cold Start Log	B-10

Appendix B-1. Control Test Log

Date _____

Test technician name _____

Control Test Begin Time_____ *(from DAQ system)*

Synchronize Emissions Test Equipment to DAQ system time _____ *(initial upon synchronization)*

Beginning of test

Turbogenerator Load Setting..... _____ %

Turbogenerator Power Factor Setting.. _____ %

Power Output ..... _____ kW

Power Factor ..... _____ %

Fuel Flow ..... _____ lbm/min

Barometric pressure ..... _____ in Hg

Ambient air temp ..... _____ °F

Relative humidity ..... _____ %

Emissions Test

First data point Date _____ Time _____

Final data point Date _____ Time _____

End of test

Turbogenerator Load Setting..... _____ %

Turbogenerator Power Factor Setting.. _____ %

Power Output ..... _____ kW *(if > ± 2% from beginning test measurement, test is invalid)*

Power Factor ..... _____ % *(if > ± 2% from beginning test measurement, test is invalid)*

Fuel Flow ..... _____ lbm/min *(if > ± 1% from beginning test measurement, test is invalid)*

Barometric pressure ... _____ in Hg *(if > ± 0.5% from beginning test measurement, test is invalid)*

Ambient air temp ..... _____ °F *(if > ± 4°F from beginning test measurement, test is invalid)*

Relative humidity ..... _____ %

Control Test End Time _____ *(from DAQ system)*

Control Test Duration Time _____ minutes *(if duration <4 or >30 minutes, test results are invalid)*

If for any reason the test is invalid, repeat the procedure.

Appendix B-2. Fuel Sampling Log

Project: _____ Ambient Pressure: _____

Location: _____ Ambient Temperature: _____

Source: _____ _____

Sampler: _____ _____

Sample ID	Date	Time	Canister ID	Initial Pressure (psig)	Final Pressure (psig)	Comments

Appendix B-3. Fuel Sampling Chain of Custody Record

Project:	Honeywell Micorturbine	Sampling Date(s):	
Location:		Shipping Date:	
Sampler:		Laboratory:	Core Laboratories
Source ID:	Fuel Header	Ship to:	8210 Mosely Road
Matrix:	Natural Gas		Houston, TX 77075-1110

Sample ID	Date	Time	Canister ID	Initial Pressure (psig)	Final Pressure (psig)	Laboratory Test Results ID

Relinquished by: _____ Date/Time: _____

Received by: _____ Date/Time: _____

Relinquished by: _____ Date/Time: _____

Received by: _____ Date/Time: _____

Relinquished by: _____ Date/Time: _____

Received by: _____ Date/Time: _____

Appendix B-4. Gas Compressor Leak Screening Log

Date: _____
Operator: _____

Time: _____ **Background Hydrocarbon Concentration: _____ ppmv**

Component	Soap Screening Test Bubbles Detected? Y/N	Hydrocarbon Analyzer Test Concentration > 1000 ppmv?	Action Taken
Compressor seals			
Valves			
Fittings			
Other			

Time: _____

Component	Soap Screening Test Bubbles Detected? Y/N	Hydrocarbon Analyzer Test Concentration > 1000 ppmv?	Action Taken
Compressor seals			
Valves			
Fittings			
Other			

Time: _____

Component	Soap Screening Test Bubbles Detected? Y/N	Hydrocarbon Analyzer Test Concentration > 1000 ppmv?	Action Taken
Compressor seals			
Valves			
Fittings			
Other			

Appendix B-5. Sampling Procedures for Equipment Leak Rates

In summary, the blow-through method consists of the following steps, which assume nitrogen is used as the carrier gas.

1. Determine the composition of the material in the designated equipment component, and the operating conditions of the component.
2. Screen the component using the portable monitoring instrument.
3. Cut a bag that will easily fit over the equipment component.
4. Connect tubing from the nearest nitrogen source to a rotameter stand.
5. Run tubing from the rotameter outlet to a "Y" that splits the nitrogen flow into two pieces of tubing and insert the tubes into openings located on either side of the bag.
6. Turn on the nitrogen flow and regulate it at the rotameter to a constant rate and record the time.
7. After the nitrogen is flowing, wrap aluminum foil around those parts of the component where air could enter the bag-enclosed volume.
8. Use duct tape, wire, and/or rope to secure the bag to the component.
9. Put a third hole in the bag roughly equidistant from the two carrier gas-fed holes.
10. Measure the oxygen concentration in the bag by inserting the lead from an oxygen meter into the third hole. Adjust the bag (i.e., modify the seals at potential leak points) until the oxygen concentration is less than 5 percent.
11. Measure the temperature in the bag.
12. Check the organic compound concentration at several points in the bag with the portable monitoring instrument to ensure that carrier gas and VOC are well mixed throughout the bag.
13. Collect samples in sample bags or canisters by drawing a sample out of the bag with a portable sampling pump.
14. Collect a background bag (optional).
15. Remove the bag and collect any liquid that accumulated in the bag in a sealed container. Note the time over which the liquid accumulated.
16. Rescreen the source.

Appendix B-6. QC Procedures for Equipment Leak Rates

- Background levels near equipment that is selected for bagging must not exceed 10 ppmv, as measured with the portable monitoring device.

- Screening values for equipment that is selected for bagging must be readable within the spanned range of the monitoring instruments. If a screening value exceeds the highest reading on the meter (i.e., "pegged reading"), a dilution probe should be used, or the reading should be identified as pegged.

- Only one piece of equipment can be enclosed per bag; a separate bag must be constructed for each equipment component.

- A separate sample bag must be used for each equipment component that is bagged. Alternatively, bags should be purged and checked for contamination prior to reuse.

- A GC must be used to measure the concentrations from gas samples.

- Gas chromatography analyses of bagged samples must follow the analytical procedures outlined in EPA Method 18.

- To ensure adequate mixing within the bag when using the blow-through method, the dilution gas must be directed onto the equipment leak interface.

- To ensure that steady-state conditions exist within the bag, wait at least five time constants (volume of bag dilution/gas flow rate) before withdrawing a sample for recording the analysis.

- The carrier gas used in the blow-through method of bagging should be analyzed by GC before it is used, and the concentration of organic compounds in the sample should be documented. For cylinder purge gases, one gas sample should be analyzed. For plant purge gas systems, gas samples should be analyzed with each bagged sample unless plant personnel can demonstrate that the plant gas remains stable enough over time to allow a one-time analysis.

Appendix B-7. Gas Compressor Leak Measurement Log
(EPA Tent/Bagging Protocol)

TABLE 4-4. EXAMPLE DATA COLLECTION FORM FOR FUGITIVE EMISSIONS BAGGING TEST (BLOW-THROUGH METHOD)

Equipment Type _____ Component ID _____
Equipment Category _____ Plant ID _____
Line Size _____ Date _____
Stream Phase (G/V, LL, HL) _____ Analysis Team _____
Barometric Pressure _____ _____
Ambient Temperature _____ Instrument ID _____
Stream Temperature _____ Stream Pressure _____
Stream Composition (Wt %) _____, _____,
_____, _____, _____

Time	Bagging Test Measurement Data
_____	Initial Screening (ppmv) Equipment Piece _____ Bkgd._____
_____	Background Bag Organic Compound Conc. (ppmv)[a] _____
_____	Dilution Gas Flow Rate (ℓ / min) _____
_____	Sample Bag 1 Organic Compound Conc. (ppmv) _____
_____	O_2 Concentration (volume %) _____
_____	Bag Temperature (^{o} C) _____
_____	Dilution Gas Flow Rate (ℓ / min) _____
_____	Sample Bag 2 Organic Compound Conc. (ppmv) _____
_____	O_2 Concentration (volume %) _____
_____	Bag Temperature (^{o} C) _____

Condensate Accumulation: Starting Time _____ Final Time _____
Organic Condensate Collected (mℓ) _____
Density of Organic Condensate (g/mℓ) _____

_____ Final Screening (ppmv) Equipment Piece _____ Bkgd. _____

[a] Collection of a background bag is optional. However, it is recommended in cases where the screening value is les than 10 ppmv and there is a detectable oxygen level in the bag.

Appendix B-8. Turbogenerator Start/Stop Log

Turbogenerator start: Date _____ Time _____

Turbogenerator stop: Date _____ Time _____
☐ Unscheduled downtime..... Duration _____days/hours ☐ Scheduled downtime

Reason for unscheduled downtime _____
_____

Turbogenerator start: Date _____ Time _____

Turbogenerator stop: Date _____ Time _____
☐ Unscheduled downtime..... Duration _____days/hours ☐ Scheduled downtime

Reason for unscheduled downtime _____
_____

Turbogenerator start: Date _____ Time _____

Turbogenerator stop: Date _____ Time _____
☐ Unscheduled downtime..... Duration _____days/hours ☐ Scheduled downtime

Reason for unscheduled downtime _____
_____

Turbogenerator start: Date _____ Time _____

Turbogenerator stop: Date _____ Time _____
☐ Unscheduled downtime..... Duration _____days/hours ☐ Scheduled downtime

Reason for unscheduled downtime _____
_____

Turbogenerator start: Date _____ Time _____

Turbogenerator stop: Date _____ Time _____
☐ Unscheduled downtime..... Duration _____days/hours ☐ Scheduled downtime

Reason for unscheduled downtime _____
_____

Turbogenerator start: Date _____ Time _____

Turbogenerator stop: Date _____ Time _____
☐ Unscheduled downtime..... Duration _____days/hours ☐ Scheduled downtime

Reason for unscheduled downtime _____
_____

Appendix B-9. Turbogenerator Cold Start Log

Date _____ Time _____

Test technician name _____

Barometric pressure ..... _____ in Hg

Ambient air temp ..... _____ °F

Relative humidity ..... _____ %

End of last turbogenerator operation Date _____ Time _____

_____ Initial *to indicate that the Turbogenerator has not operated within the past 8 hours.*

_____ Initial *to indicate that the Turbogenerator internal clock has been synchronized to DAQ clock.*

_____ Initial *to indicate that the connected load is greater than 75 kW*

(to allow for full-power output operation.)

_____ Initial *to indicate that the Turbogenerator load setting is at 100%.*

_____ Initial *to indicate that all necessary preparations have been made to start the Turbogenerator.*

_____ Initial *to indicate that stopwatch is ready to begin timing.*

Initiate turbogenerator start-up and begin stopwatch timing.

Time of commencement of start-up ..... _____ *(from Turbogenerator display panel).*

Upon indication that power output is a full load, end stopwatch timing and note time of day.

Time of full power output ..... _____ *(from Turbogenerator display panel).*

Elapsed time from stopwatch ..... _____

Calculated elapsed time from Turbogenerator display data ..... _____

APPENDIX C
Instrument QA/QC Check Forms

Page

Appendix C-1. 7600 ION Installation and Setup Checks.....C-2
Appendix C-2. 7600 ION QA/QC Checks.....C-3
Appendix C-3. Flow Meter Setup Checks.....C-4
Appendix C-4. Flow Meter QA/QC Checks.....C-12
Appendix C-5. Hydrocarbon Analyzer Calibration Form.....C-13

Appendix C-1. 7600 ION Installation and Setup Checks

Date _____ Lead installer name _____

Initial all items after they have been completed.

NOTE: In all events, conformance to applicable local codes will supercede the instructions in this log sheet or the installation manual.

_____ Prior to commencement of installation, **obtain and read the *7600 ION INSTALLATION & BASIC SETUP MANUAL*.** The points outlined here were developed as a guideline using the instructions in the *7600 ION INSTALLATION & BASIC SETUP MANUAL,* but should any information or instructions in the manual not be listed here, those steps should not be skipped or ignored. A reference page number listed as [*x*] will be included for each point, as appropriate.

_____ Verify that the meter enclosure is mounted in a location to provide ventilation around the case in an area free of oil, moisture, excessive dust and corrosive vapors. All wiring will conform to applicable NEC standards.

_____ Connect to power supply to the 7600 ION (**85 to 240 VAC**) via a **switch or circuit breaker** using **AWG 12** to **AWG 14 wire**. Connect the line supply wire to the L/+ terminal and the neutral supply wire to the N/- using a compatible plug. [7]

_____ Connect the ground terminal of the 7600 ION to the switchgear earth ground using AWB 12 wire or larger. [8]

_____ Make voltage and current transformer (CT) connections to the 7600 ION according to the type of electrical connection according to the directions in the Manual [pages 8-14]. To provide a maximum input of 20 amps for a current flow of 200 amps, 10:1 ratio CTs should be used.

AWG 12 to 14 wire is recommended for all phase voltage and current connections.

_____ Use a digital multimeter (DMM) to check that the phase and polarity of the AC voltage inputs are correct.

_____ Connect the DAS to the DB9 serial connector on the back of the 7600 ION via a **null modem**. [18]

_____ Set-up the 7600 ION according to the instructions in the Manual [pages 24-29].

_____ Verify the operation of the 7600 ION according to the instructions in the Manual [30].

_____ Using a DMM measure each of the phase voltage and currents and compare them to the readings on the display of the 7600 ION. The readings on the DMM should agree (within the tolerance of the meters) with the readings from the 7600 ION. If they do not agree, modify the connections to the 7600 ION until they are correct. Also check both readings for reasonability.

_____ The readings of the 7600 ION agree with the DMM readings and are reasonable for this connection.

_____ Confirm that the readings on the 7600 ION agree with the corresponding readings on the DAS. If they do not agree, troubleshoot the communications link until proper readings are obtained by the DAS.

_____ The readings of the 7600 ION agree with the DAS readings.

_____ Verify that the readings are being properly stored on the DAS harddisk or other non-volatile memory.

Appendix C-2. 7600 ION QA/QC Checks

Date _____

QA/QCTest leader name _____

Initial all items after they have been completed.

_____ 7600 ION calibration certificates and supporting data are on-hand.

_____ Check power supply voltage with a DMM (should be between **85 to 240 VAC.**)

_____ Check the 7600 ION ground terminal connection for continuity with the switchgear earth ground.

_____ Use a digital multimeter (DMM) to check that the phase and polarity of the AC voltage inputs are correct.

_____ Verify the operation of the 7600 ION according to the instructions in the *7600 ION INSTALLATION & BASIC SETUP MANUAL* [page 30].

_____ Using a DMM measure each of the phase voltage and currents and compare them to the readings on the display of the 7600 ION. The readings on the DMM should agree (within the tolerance of the meters) with the readings from the 7600 ION. If they do not agree, note the readings from each source on the back of this sheet, along with the date and time of the readings.

_____ The readings of the 7600 ION agree with the DMM readings.

_____ Confirm that the readings on the 7600 ION agree with the corresponding readings on the DAS. If they do not agree, troubleshoot the communications link until proper readings are obtained by the DAS.

_____ The readings of the 7600 ION agree with the DAS readings.

_____ Verify that the readings are being properly stored on the DAS harddisk or other non-volatile memory.

Appendix C-3. Fuel Flowmeter Setup Checks

Appendix C-4. Fuel Flowmeter QA/QC Checks

SENSOR FUNCTION CHECKS

1) Analog Loop Test

Date _____

Time	_____	_____	_____	_____
Meter Output (mA)	_____	_____	_____	_____
Master Reading mA)	_____	_____	_____	_____
% Difference	_____	_____	_____	_____

Corrective Action _____

2) Analog Output to DAS Terminal

Date _____

Time	_____	_____
Meter Output (mA)	_____	_____
Meter "raw data" reading at DAS terminal (mA)	_____	_____
% Difference	_____	_____

Corrective Action _____

CALIBRATION CHECKS

1) Bench Calibration

Date _____ Time _____

Absolute Pressure Offset Trim Point (psi) _____

Absolute Pressure Slope Trim Point (psi) _____

Absolute Temperature Offset Trim Point (°F) _____

Absolute Temperature Slope Trim Point (°F) _____

Corrective Action _____

2) Zero Check

Date _____

Time _____

Initial reading _____mA _____lbs/hr

Reading after adjustment _____mA _____lbs/hr (should be 0, enter n/a if no adjustment)

Corrective Action _____

Appendix C-5 Hydrocarbon Analyzer Calibration Form

Date of Calibration:_____ Barometric Pressure:_____
Operator:_____ Ambient Temp:_____

Make/Model:_____
Serial Number:_____
Calibration Gas:_____

Reference Concentration	Sensor Response Before Adjustments	Sensor Response After Adjustments