SRI/USEPA-GHG-VR-15
September 2001

Environmental Technology Verification Report

Honeywell Power Systems, Inc. Parallon® 75 kW Turbogenerator With CO Emissions Control

Prepared by:

Greenhouse Gas Technology Center
Southern Research Institute

Under a Cooperative Agreement With
U.S. Environmental Protection Agency

EPA REVIEW NOTICE

This report has been peer and administratively reviewed by the U.S. Environmental Protection Agency, and approved for publication. Mention of trade names or commercial products does not constitute endorsement or recommendation for use.

SRI/USEPA-GHG-VR-15
September 2001

Greenhouse Gas Technology Center

A U.S. EPA Sponsored Environmental Technology Verification (ETV) Organization

Environmental Technology Verification Report

Honeywell Power Systems, Inc.
Parallon® 75 kW Turbogenerator
With CO Emissions Control

Prepared By:
Greenhouse Gas Technology Center
Southern Research Institute
PO Box 13825
Research Triangle Park, NC 27709 USA
Telephone: 919/806-3456

Under EPA Cooperative Agreement CR 826311-01-0

U.S. Environmental Protection Agency
Office of Research and Development
National Risk Management Research Laboratory
Air Pollution Prevention and Control Division
Research Triangle Park, NC 27711 USA

EPA Project Officer: David A. Kirchgessner

TABLE OF CONTENTS

Page

APPENDICES iii
LIST OF FIGURES iii
LIST OF TABLES iii
ACKNOWLEDGMENTS iv
ACRONYMS/ABBREVIATIONS v

1.0 INTRODUCTION 1-1
1.1. BACKGROUND 1-1
1.2. PARALLON 75 KW TURBOGENERATOR DESCRIPTION 1-3
1.3. TEST FACILITY DESCRIPTION 1-5
1.4. OVERVIEW OF VERIFICATION PARAMETERS AND EVALUATION STRATEGIES 1-6
1.4.1. Electric Power Production Performance 1-7
1.4.2. Emissions Performance 1-9

2.0 VERIFICATION RESULTS 2-1
2.1. OVERVIEW 2-1
2.2. ELECTRIC POWER PRODUCTION PERFORMANCE 2-1
2.3. EMISSIONS PERFORMANCE 2-2

3.0 DATA QUALITY ASSESSMENT 3-1
3.1. DATA QUALITY OBJECTIVES 3-1
3.2. EVALUATION OF DATA QUALITY GOALS AND INDICATORS 3-1
3.2.1. Electrical Efficiency Determination 3-4
3.2.2. Power Output Measurements 3-5
3.2.3. Fuel Flow Rate Measurements 3-6
3.2.4. Fuel Heating Value Measurements 3-9
3.2.5. Exhaust Stack Emission Measurements 3-10
3.2.6. Ambient Measurements 3-13

4.0 TECHNICAL AND PERFORMANCE DATA SUPPLIED BY HONEYWELL 4-1
4.1. INTRODUCTION 4-1
4.2. ELECTRIC POWER PRODUCTION PERFORMANCE 4-1

5.0 REFERENCES 5-1

APPENDICES

		Page
APPENDIX A	Appendix A-1 - Summary of Emission Analyzer Linearity Tests	A-2
	Appendix A-2 - Summary of Reference Method System Error and Drift Checks	A-4

LIST OF FIGURES

		Page
Figure 1-1	Honeywell Parallon® 75 kW Turbogenerator	1-4
Figure 1-2	The Turbogenerator at the College Park BCHP Test Facility	1-5
Figure 1-3	Typical Daily Power Consumption Profile	1-6
Figure 1-4	Schematic of Measurement System	1-8
Figure 2-1	Average Turbogenerator Emissions at 75 Percent of Full Load	2-5
Figure 2-2	Average Turbogenerator Emissions at 50 Percent of Full Load	2-5
Figure 3-1	Integral Orifice Meter Correction Factor	3-9

LIST OF TABLES

		Page
Table 1-1	Turbogenerator Physical and Electrical Specifications	1-3
Table 1-2	Summary of Emissions Testing Methods	1-9
Table 2-1	Power and Electrical Efficiency Performance	2-3
Table 2-2	Summary of Turbogenerator Emissions Performance	2-4
Table 2-3	Average Turbogenerator Methane Emissions at 50 Percent of Full Load	2-6
Table 3-1	Data Quality Objectives	3-1
Table 3-2	Summary of Data Quality Indicator Goals and Results	3-2
Table 3-3	Variability Observed In Operating Conditions	3-5
Table 3-4	Results of Additional QA/QC Checks	3-6
Table 3-5	Comparison of Integral Orifice Meter With Dry Gas Meter During Load Testing	3-8
Table 3-6	Summary of Duplicate Analyses	3-10
Table 3-7	Summary of Replicate Analyses	3-10
Table 3-8	Results of Additional Emissions Testing QC Checks	3-12

ACKNOWLEDGMENTS

The Greenhouse Gas Technology Center wishes to thank the following staff of the University of Maryland, College Park - Center for Environmental Energy Engineering (CEEE) for their service in hosting this test: Predrag Popovic, Aris Marantan, Eric Griff, and Werner Wongsosaputro. The CEEE group operated the microturbine and provided technical support during the installation and shakedown of the technology, installed the GHG Center's metering equipment, and provided key station operating data. Thanks are also extended to the members of the GHG Center's Electricity Generation Stakeholder Group and Distributed Generation Technical Panel for reviewing and providing input on the testing strategy and this Verification Report. The GHG Center also wishes to acknowledge the technical support provided by Todd Kollross and Ted Bronson of the Gas Technology Institute.

ACRONYMS/ABBREVIATIONS

acf	actual cubic feet
BCHP	Building Combined Heat and Power
Btu/ft^3	British thermal units per cubic foot
Btu/hr	British thermal units per hour
CEEE	University of MD, College Park - Center for Environmental Energy Engineering
CH_4	methane
CO	carbon monoxide
CO_2	carbon dioxide
DG	distributed generation
DQI	data quality indicator
DQO	data quality objective
dscf/MMBtu	dry standard cubic feet per million British thermal units
EPA	Environmental Protection Agency
ETV	Environmental Technology Verification
^oF	degrees Fahrenheit
FID	flame ionization detector
ft^2	square feet
ft^3/min	cubic feet per minute
gal	gallons
GC	gas chromatograph
GHGs	greenhouse gases
GHG Center	Greenhouse Gas Technology Center
HI	heat input
Honeywell	Honeywell Power Systems, Inc.
hr	hours
HVAC	heating, ventilation, and air conditioning
Hz	hertz
in.	inches
ISO	International Organization for Standardization
kW	kilowatts
kWh	kilowatt hours
lb	pounds
lb/dscf	pounds per dry standard cubic foot
lb/hr	pounds per hour
lb/kWh	pounds per kilowatt hour
LHV	lower heating value
mL	milliliters
MMBtu/hr	million British thermal units per hour
N_2	nitrogen
NDIR	nondispersive infrared spectroscopy
NIST	National Institute for Standards and Technology
NO	nitrogen oxide
NO_2	nitrogen dioxide
NO_X	nitrogen oxides
O_2	oxygen
O_3	ozone
ORD	Office of Research and Development

(continued)

ACRONYMS/ABBREVIATIONS
(continued)

ppm	parts per million
ppmv	parts per million volume
psia	pounds per square inch absolute
psig	pounds per square inch gauge
QA/QC	Quality Assurance/Quality Control
QMP	Quality Management Plan
RH	relative humidity
RTD	resistance temperature detector
SCADA	Supervisory Control and Data Acquisition system
scfm	standard cubic feet per minute
SRI	Southern Research Institute
Test Plan	Test and Quality Assurance Plan
THC	total hydrocarbon
Turbogenerator	Parallon® 75 kW Turbogenerator
VAC	volts alternating current

1.0 INTRODUCTION

1.1. BACKGROUND

The U.S. Environmental Protection Agency's Office of Research and Development (EPA-ORD) operates a program to facilitate the deployment of innovative technologies through performance verification and information dissemination. The goal of the Environmental Technology Verification (ETV) program is to further environmental protection by substantially accelerating the acceptance and use of improved and innovative environmental technologies. ETV is funded by Congress in response to the belief that there are many viable environmental technologies that are not being used for the lack of credible third-party performance data. With performance data developed under ETV, technology buyers, financiers, and permitters in the United States and abroad will be better equipped to make informed decisions regarding environmental technology purchase and use.

The Greenhouse Gas Technology Center (GHG Center) is one of several verification organizations operating under ETV. The GHG Center is managed by the U.S. EPA's partner verification organization, Southern Research Institute (SRI), which conducts verification testing of promising GHG mitigation and monitoring technologies. The GHG Center's verification process consists of developing verification protocols, conducting field tests, collecting and interpreting field and other data, obtaining independent peer review input, and reporting findings. Performance evaluations are conducted according to externally reviewed Verification Test and Quality Assurance Test Plans (Test Plans) and established protocols for quality assurance.

The GHG Center is guided by volunteer groups of stakeholders. These stakeholders offer advice on specific technologies most appropriate for testing, help disseminate results, and review Test Plans and Verification Reports. The GHG Center's stakeholder groups consist of national and international experts in the areas of climate science and environmental policy, technology, and regulation. Members include industry trade organizations, technology purchasers, environmental technology finance groups, governmental organizations, and other interested groups. In certain cases, industry-specific stakeholder groups and technical panels are assembled for technology areas where specific expertise is needed. The GHG Center's Electricity Generation Stakeholder Group and a specially formed Distributed Generation (DG) Technical Panel offer advice on next-generation power technologies where independent performance testing is needed. They also assist in selecting verification factors, and provide guidance to ensure that the performance evaluation is based on recognized and reliable field measurement and data analysis procedures.

One technology of interest to the GHG Center's stakeholders is microturbines as a distributed energy source. DG generally refers to power generation equipment, typically in the range of 5 to 1,000 kilowatts (kW) power output, that provide electricity at a site closer to customers than a central power station. A distributed power unit can be connected directly to the customer's source, and/or to a utility's transmission and distribution system. These technologies provide customers one or more of the following main services: stand-by generation, peak shaving capability (generation during expensive high demand periods), baseload generation (constant generation), or cogeneration (combined heat and power generation). Examples of technologies available for DG include gas turbine generators, internal combustion engine generators (e.g., gas, diesel), photovoltaics, wind turbines, fuel cells, and microturbines.

To pursue independent performance verification testing of microturbines, the GHG Center placed formal announcements in the Commerce Business Daily and industry trade journals, and invited vendors of commercial products to participate in independent testing. Honeywell Power Systems, Inc. (Honeywell) committed to participate in the independent verification of their microturbine. The technology is referred to as the Parallon® 75 kW Turbogenerator (Turbogenerator). This technology is designed to produce electric power in stand-alone and grid-connected applications. When the unit is connected to the utility grid, it supplies electrical power to the facility where it is installed, or to the grid at large, during periods when its generation exceeds the needs of the facility. When configured to operate isolated, the Turbogenerator supplies electricity to specific equipment dedicated to consume the power generated.

A comprehensive performance evaluation of the Turbogenerator was carried out by the GHG Center at a commercial office building at the University of Maryland, College Park. The University's Center for Environmental Energy Engineering (CEEE) has established a test facility at this building to evaluate distributed energy conversion systems and heating, ventilation, and air-conditioning (HVAC) systems for buildings in cooperation with private industry and government groups. Testing began in December 2000 and continued through April 2001. The Turbogenerator was one of the first systems to be tested, and remains in operation at the facility. It is connected to the electric grid system, and is providing about 30 percent of the building's electricity requirements. Results of the comprehensive performance evaluation conducted on this system can be found in the Verification Statement and Report titled *Environmental Technology Verification Report for the Honeywell Power Systems, Inc. Parallon® 75 kW Turbogenerator* (SRI 2001*)*. It can be downloaded from the GHG Center's Web site (www.sri-rtp.com) or from the U.S. EPA Web site (www.epa.gov/etv).

This report presents results of a second test conducted on the Turbogenerator after installation of optional carbon monoxide (CO) emissions control equipment. The test was conducted to evaluate emissions performance of the system with this optional equipment installed, and to compare the electrical efficiency and emissions performance with those measured on the same unit without CO control. This test did not repeat power quality and operational evaluations that were conducted earlier.

The efficiency and emissions performance was tested using the same procedures used in the initial testing on the system. Details on the verification test design, measurement test procedures, and Quality Assurance/Quality Control (QA/QC) procedures can be found in the Test Plan titled *Testing and Quality Assurance Plan for the Honeywell Power Systems, Inc. Parallon® 75 kW Turbogenerator* (SRI 2001*)*. It can be downloaded from the GHG Center's Web site or from the U.S. EPA Web site. The Test Plan describes the rationale for the experimental design, the testing and instrument calibration procedures planned for use, and specific QA/QC goals and procedures. The Test Plan was reviewed and revised based on comments received from Honeywell, CEEE, selected members of the GHG Center's stakeholder groups, and the EPA Quality Assurance Team. The Test Plan meets the requirements of the GHG Center's Quality Management Plan (QMP), and thereby satisfies ETV QMP requirements. In some cases, deviations from the Test Plan were required. These deviations, and the alternative procedures selected for use, are discussed in this report.

The remaining discussion in this section lists the performance verification parameters, describes the Turbogenerator technology, presents the operating schedule of the test facility, and lists the performance verification parameters that were quantified. Section 2 presents test results, and Section 3 assesses the quality of the data obtained. Section 4, written by Honeywell, provides additional information regarding the Turbogenerator. Information provided in Section 4 has not been independently verified by the GHG Center.

1.2. PARALLON 75 KW TURBOGENERATOR DESCRIPTION

Large- and medium-scale gas-fired turbines have been used to generate electricity since the 1950s. Recently, medium-scale turbines have become a source of additional generation capacity because of their ability to provide electricity at the point of use. Technical and manufacturing developments have occurred in the last decade that have enabled the introduction of microturbines, with generation capacity ranging from 30 to 200 kW. The Turbogenerator represents a new generation of compact natural-gas-fired microturbine with the capability to produce a nominal 75 kW of 3-phase electricity at 275 volts alternating current (VAC).

The Turbogenerator operates on natural gas at a fuel pressure ranging from 75 to 125 psig. An optional booster compressor is offered which allows low-pressure natural gas to be pressurized to these operating conditions. Table 1-1 summarizes the physical and electrical specifications supplied by Honeywell for the unit tested. The Turbogenerator is marketed both as an alternative electrical generation source and as a source of backup power. The standard Turbogenerator comes from the factory outfitted with hardware to allow it to be connected to the grid. A stand-alone or isolated configuration requires an optional "black start" battery to provide starting current to the power system.

Table 1-1. Turbogenerator Physical and Electrical Specifications
(Source: Honeywell Power Systems, Inc.)

Dimensions	Width Length Height	48.0 in. 91.9 in. 93.4 in.
Weight	Standard Power System Natural Gas Compressor (optional, installed on test unit) 120/208 AutoTransformer	< 3,000 lb (excluding options) 350 lb 326 lb
Electrical Inputs	Power (startup) Communications	Utility Grid or Black Start Battery (optional) SCADA (optional)
Electrical Outputs	Power Communications	275 VAC, 50/60 Hz SCADA (optional)
External Transformer	United States Specifications	120/240 VAC ± 15 % (Delta), 57- 63 Hz
		277/480 VAC ± 15 % (Wye), 57 - 63 Hz
Inlet Air Required	Core Engine	1220 scfm
Fuel Pressure Required	W/o Gas Compressor W/ Gas Compressor (Test Unit)	75 to 125 psig 15 to 30 psia
Fuel Flow Rate	Steady State (full power, ISO condition)	44.5 lb/hr or 16.44 scfm

The Turbogenerator consists of two main sections: an engine section and an electrical section (Figure 1-1). In the engine section, filtered air enters the compressor, where the air is pressurized. It then enters the recuperator, which is a heat exchanger that adds heat to the compressed air using exhaust heat. The air then enters the combustor where it is mixed with fuel and heated further by combustion. The resulting hot gas is allowed to expand through the turbine section to perform work, rotating the turbine shaft to turn the generator shaft which produces electricity. The compressor is mounted on the same shaft as the electrical generator, and consists of only one rotating part. Because of the inverter-based electronics that enable the generator to operate at high speeds and frequencies, the need for a gearbox and associated moving parts is eliminated. The high-speed rotating shaft is supported by air-foil bearings, and does not

require lubrication, as compared to the oil-lubricated bearings used in other designs. The exhaust gas exits the turbine and enters the recuperator, which captures some of the energy and uses it to preheat the air entering the combustor, improving the efficiency of the system. The exhaust gas then exits the recuperator through a muffler with sufficient heat energy for cogeneration applications or, alternatively, for release to the atmosphere.

Figure 1-1. Honeywell Parallon® 75 kW Turbogenerator

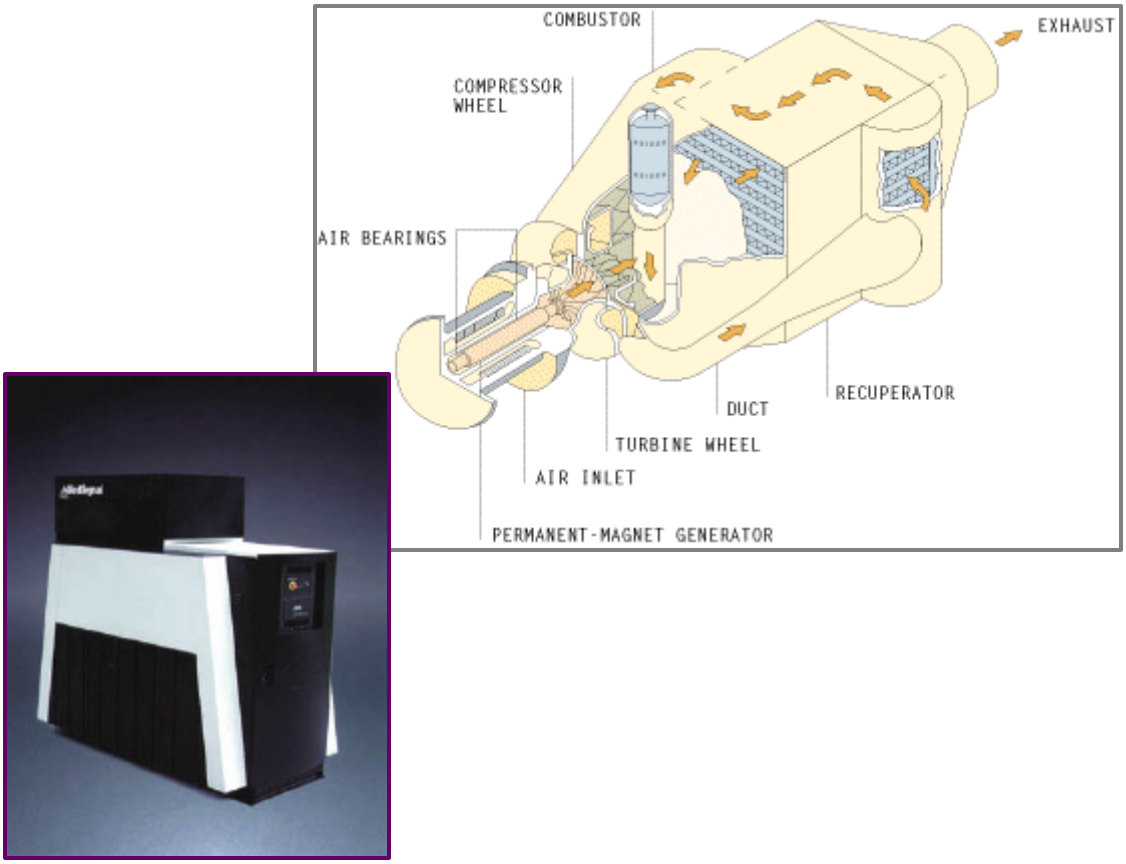

The permanent-magnet generator produces high-frequency alternating current which is rectified, inverted, and filtered by the line power unit into conditioned alternating current at 275 volts. This can be converted to the voltage level required by the facility using either an optional internal transformer (120/208 VAC) or external transformers (see Table 1-1 for complete listing) for distribution. The unit supplies a variable electrical frequency of either 50 or 60 hertz (Hz). The Turbogenerator is supplied with a control system that allows for automatic and unattended operation. All operations, including startup, synchronization with the grid, dispatch, and shutdown, can be performed manually or remotely using an optional Supervisory Control and Data Acquisition (SCADA) system.

Installation requires a suitable location and connection to a natural gas supply line and electrical power lines. For a typical grid-interconnected installation, the Turbogenerator requires a firm, level base (concrete pad, steel rails, or other suitable supports) in an area with good air circulation and room for maintenance access. The Turbogenerator is anchored to the base consistent with local codes, and is connected to a natural gas supply line with an external shutoff valve. If the internal transformer is used, the power output can be connected to the main circuit breaker at the facility. Otherwise, the power output

is connected to an external transformer (supplied by Honeywell as optional equipment) which is then connected to the facility's power system.

For this test, an optional CO emissions control technology, manufactured by Honeywell, was installed on the test Turbogenerator. This technology is proprietary to Honeywell and a detailed description of the CO emissions control system is not included here, but is identified as Turbogenerator Part Number 721836-0001. The CO emissions control equipment was installed by Honeywell personnel at the conclusion of the initial verification. After the CO control equipment was installed, the unit was inspected for proper operation, and testing of the unit was resumed.

1.3. TEST FACILITY DESCRIPTION

The Building Combined Heat and Power (BCHP) test facility was established in a 55,000 ft^2 office building owned by University of Maryland. The office building is used as a research and demonstration facility and has been developed to optimize the integration of DG technologies and to demonstrate the benefits and implementation issues to the engineering community, equipment manufacturers, and building owners. CEEE projects are executed in collaboration with the U.S. Department of Energy, Oak Ridge National Laboratory, ETV, and industry partners (e.g., ATS Engineering, Broad, Baltimore Gas and Electric, Potomac Electric Power Company - PEPCO, Washington Gas, Electric Power Research Institute). Installation and operation of the Turbogenerator is one of the first series of DG projects undertaken by CEEE. The Turbogenerator at this test facility is shown in Figure 1.2.

Figure 1-2. The Turbogenerator at the College Park BCHP Test Facility

The Turbogenerator is installed to reduce grid electrical consumption at the test facility. The facility has a peak electrical load of approximately 275 kW, with 65 to 75 percent electricity consumed by HVAC equipment, and the rest used for lighting, convenience outlets, office machines (e.g., computers, fax), and others (e.g., vending machines). Figure 1-3 illustrates a daily profile of the electricity consumed at the facility. The highest electricity consumption occurs when the building is fully occupied, between 9:00 am and 5:00 pm. During these periods, the Turbogenerator operates at full capacity, and is programmed to produce full power (nominal 75 kW). Electrical demand in excess of the capacity of the unit is

automatically supplied by the grid. During hours surrounding the building operating periods, the Turbogenerator remains down.

Figure 1-3. Typical Daily Power Consumption Profile

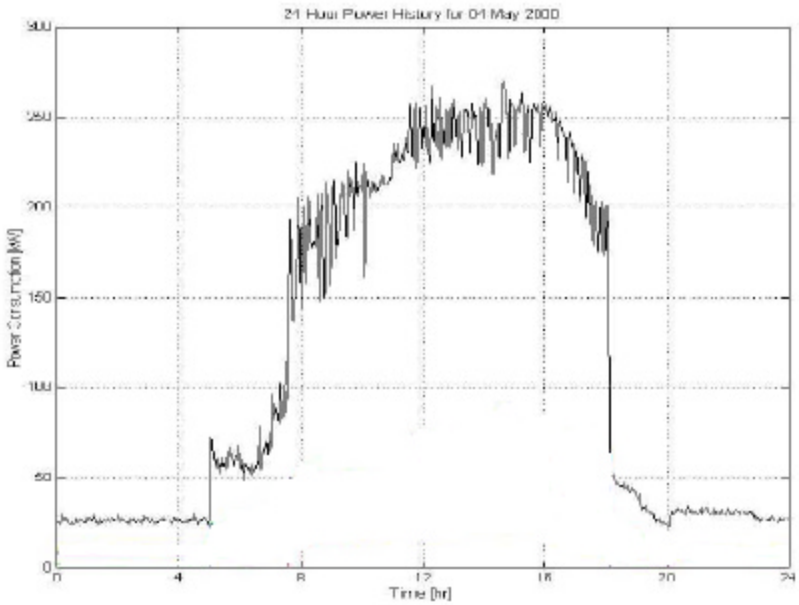

The Turbogenerator and transformer are located outside the building on a concrete pad. Natural gas is supplied to the building and Turbogenerator at about 2 psig (17 psia) fuel pressure, which is within the 15 to 30 psia (Table 1-1) range that requires the optional booster compressor. The booster compressor increases the gas pressure to about 75 psig, so it can be fed to the turbine for combustion. The compressor is powered directly by the 275 VAC primary output from the generator. An external transformer converts the 275 VAC output from the Turbogenerator inverter to the 480 VAC required by the facility. To facilitate remote operation, analysis, and optimization of the Turbogenerator, an optional SCADA system has also been installed.

During verification, the Turbogenerator's performance was monitored using a dedicated desktop computer to continuously log data from verification meters installed and calibrated by the GHG Center. These data, along with the turbine operating data continuously logged by the SCADA system, were downloaded and analyzed on a weekly basis. The data were also accessible through the facility's network so they could be readily available to facility personnel for operational purposes.

1.4. OVERVIEW OF VERIFICATION PARAMETERS AND EVALUATION STRATEGIES

During the initial verification conducted by the GHG Center, the strategy for evaluation of emissions consisted of a series of short periods of "load testing," in which the GHG Center intentionally modulated the unit to operate at 50, 75, 90, and 100 percent of capacity. To evaluate the performance of the CO emissions control, these tests were repeated after installation of the new CO control device. During the initial testing, it was determined that CO emissions were extremely low at 100 and 90 percent of capacity, and as such, meaningful emission reduction could be determined only at lower loads, where CO

emissions were more significant. Therefore, only the reduced loads of 50 and 75 percent were repeated to evaluate emissions with the CO control system installed. During these load tests, simultaneous monitoring for electric power output, fuel consumption, ambient meteorological conditions, and exhaust emissions was performed. Fuel samples were collected to enable natural gas heating value determinations. Average electrical power output, heat input, electrical energy conversion efficiency, exhaust stack emission rates, and emission reductions are verified for each operating load.

The specific verification factors associated with the testing are listed below, and are followed by a brief discussion of each verification factor and its method of determination. Detailed descriptions of testing and analysis methods are not provided here, but can be found in the previously referenced Test Plan.

Electric Power Production Performance

- Power output (kW) and electrical efficiency (%) at selected loads

Emissions Performance

- Nitrogen oxides (NO_X) concentrations and emission rates
- Carbon monoxide (CO) concentrations and emission rates
- Total hydrocarbons (THCs) concentrations and emission rates
- Carbon dioxide (CO_2) and methane (CH_4) concentrations and emission rates

1.4.1. Electric Power Production Performance

This testing was repeated in conjunction with the emissions testing to verify how the optional CO control impacts efficiency compared to the initial verification. Electrical efficiency determination is based upon guidelines listed in ASME PTC22, which require test runs in duration of 1 to 30 minutes at constant operating load settings (ASME 1997). Electrical efficiency was calculated using measured average power output, average fuel flow rate, and fuel lower heating value (LHV). The electrical power output in kW was measured with a 7600 ION Power Meter (Power Measurements Ltd.). Fuel input was determined using an in-line orifice type flow meter (Rosemount, Inc.), and a diaphragm-type gas meter. Fuel gas sampling and energy content analysis (via gas chromatoagraph) were conducted to determine the LHV of natural gas (ASTM Specifications D1945 and D3588). Ambient temperature, relative humidity (RH), and barometric pressure were measured during the test periods to support determination of electrical conversion efficiency as required in PTC22. Figure 1-4 illustrates the measurement equipment used in the verification. Energy-to-electricity conversion efficiency was computed by dividing the average electrical energy output by the average energy input using Equation 1 (per ASME PTC22).

$$h = \frac{3412.14\ kW}{HI} \qquad (Eqn.1)$$

where :

h = efficiency (%)

kW = average electrical power output (kW)

HI = average heat input (Btu/hr); determined by multiplying the average mass flow rate of natural gas to the turbine (ft^3/min) times the natural gas LHV (Btu/ft^3) times 60 (min/hr)

Figure 1-4. Schematic of Measurement System

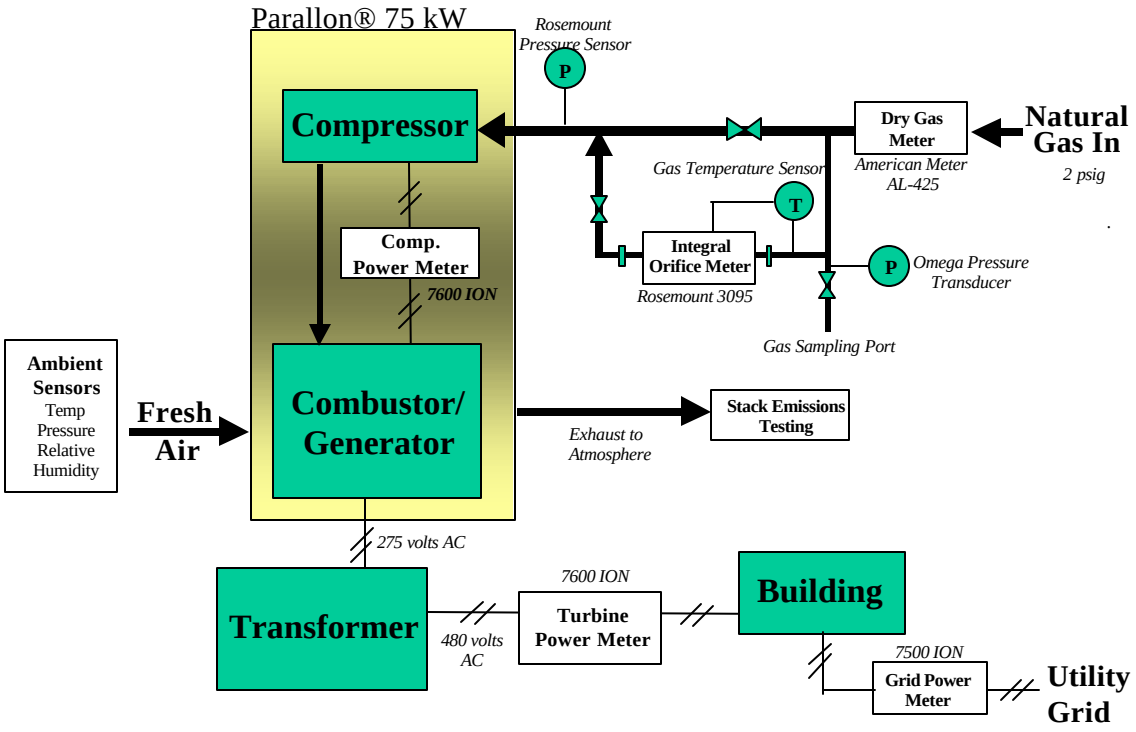

The 7600 ION electrical power meter monitored the kW of real power at a rate of one reading per minute. The electric meter was located after the 480 volt transformer, and represented power output and power quality delivered to the tenants occupying the facility. The real-time data collected by the 7600 ION were downloaded and stored on the BCHP data acquisition computer using Power Measurements' PEGASYS software. The logged kW readings were averaged over the duration of each load test period (30 minutes) to compute electrical efficiency.

During load testing, natural gas samples were collected and analyzed to determine gas composition and heating value. One gas sample was collected in a 500 milliliter (mL) evacuated stainless steel canister during each load condition. This sampling interval was selected based on pre-test sampling and analysis, which showed that heating value does not change significantly at the test facility. During the initial verification testing, replicate samples were collected every third sample to quantify potential errors introduced by manual gas sampling and analysis. The collected samples were returned to a certified laboratory (Core Laboratories, Inc. of Houston, Texas - ISO 9002 Certification Number 31012) for compositional analysis in accordance with ASTM Specification D1945 for quantification of methane (C1) to hexanes plus (C6+), nitrogen, oxygen, and carbon dioxide (ASTM 2001a). The compositional data were then used in conjunction with ASTM Specification D3588 to calculate the high and low heat values, and the relative density of the gas (ASTM 2001b). Duplicate analyses were performed by the laboratory on randomly selected samples to determine the repeatability of the LHV results.

The mass flow rate of the fuel supplied to the Turbogenerator was measured using an integral orifice meter (Rosemount Model 3095/1195) and a dry gas meter in series. The two meters were installed in series to allow natural gas to flow through both meters while the turbine was operating. This

configuration allowed independent performance checks to be performed. The orifice meter contained a 0.500-in. orifice plate to enable flow measurements to be conducted at the ranges expected during testing (5 to 20 scfm natural gas or 13 to 54 lb/hr). The meter was temperature and pressure compensated to provide mass flow output at standard conditions (60 ^{o}F, 14.696 psia). The meter was configured to continuously monitor flows at a rate of one reading per minute. Prior to testing, the orifice type flow meter was factory calibrated, and a calibration certificate traceable to the National Institute for Standards and Technology (NIST) was obtained. The dry gas meter (American Meter Company Model AL-425) was provided and calibrated to NIST-traceable standards by the Washington Gas Company. It served as an independent check on the orifice meter.

During performance checks, discrepancies between the flow measured by the orifice meter and that measured by the dry gas meter were observed. After comparative analysis of the data, it was determined that the orifice meter flows were biased high near the upper range of the instrument because of flow disturbance induced by fittings installed too close to the meter. Detailed documentation of these findings, and QA/QC checks performed to arrive at this conclusion, is provided in Section 3.2.3. To provide the most accurate results, the data collected by the orifice meter were invalidated and electrical efficiency was calculated using the dry gas meter. This data, corresponding to the time intervals during which load tests were performed, were used in conjunction with data from the electrical power meter and fuel heating value results to make the efficiency calculations.

1.4.2. Emissions Performance

During the initial verification of the Turbogenerator, pollutant concentration and emission rate for NO_X, CO, THCs, CO_2, and CH_4 were measured on the turbine exhaust stack at the four load conditions. The emissions load tests coincided with the electrical efficiency determination at each load. To evaluate the performance of the CO control system, the testing was repeated at 75 and 50 percent loads where significant CO emissions were measured during the first test. All of the test procedures used in the verifications were U.S. EPA Federal Reference Methods, which are well documented in the Code of Federal Regulations. The Reference Methods include procedures for selecting measurement system performance specifications and test procedures, quality control procedures, and emission calculations (40CFR60, Appendix A). Table 1-2 summarizes the standard Test Methods that were followed.

Table 1-2. Summary of Emissions Testing Methods

Exhaust Stack			
Pollutant	**EPA Reference Method**	**Number of Loads Tested**	**Number of Tests**
NO_X	20	2	3 per load (30 minutes each)
CO	10	2	3 per load (30 minutes each)
THCs	25A	2	3 per load (30 minutes each)
CO_2	3A	2	3 per load (30 minutes each)
CH_4	18	2	3 per load (30 minutes each)
O_2	3A	2	3 per load (30 minutes each)

Following Method 20 sampling procedures, nine traverse points were selected within the 23- by 19-in. rectangular stack extension placed on top of the Turbogenerator's short stack. A preliminary oxygen/nitrogen oxides (O_2/NO_X) stratification test confirmed that pollutant stratification was not present

in the exhaust stack. During each test, sampling was conducted for approximately 30 minutes at a single point near the center of the stack. Results of the instrumental testing are reported in units of parts per million volume dry (ppmv) and ppmv corrected to 15 percent O_2. The emissions testing was conducted by TRC Environmental Corporation of Raleigh, North Carolina, under the on-site supervision of the GHG Center Field Team Leader.

A mobile laboratory housed the instrumentation and recorded emissions data throughout the testing periods. A detailed description of the sampling system used for determination of concentrations of criteria pollutants, GHGs, and O_2 is provided in the Test Plan, and is not repeated in this report. A brief description of key features is provided below.

In order for the CO_2, O_2, NO_X, and CO instruments to operate properly and reliably, flue gas must be conditioned prior to introduction into the analyzers. The gas conditioning system used for this test was designed to remove water vapor and/or particulate from the sample. Gas was extracted from the turbine exhaust gas stream through a stainless steel probe and heated sample line and transported to two ice-bath condensers on each side of a sample pump. The condensers removed moisture from the gas stream. The clean, dry sample was then transported to a flow distribution manifold where sample flow to each analyzer was controlled. Calibration gases were introduced to the sampling system at the sample probe to perform bias and linearity checks.

For CO_2 and O_2 determination, a continuous sample was extracted from the emission source and passed through a Servomex Model 1400 analyzer. For determination of CO_2 concentrations, the Model 1400 was equipped with a nondispersive infrared (NDIR) spectrometer. The CO_2 analyzer range was set at 0 to 20 percent. The same Model 1400 is also equipped with a micro-fuel-cell O_2 sensor. The fuel-cell technology used by this instrument determines levels of O_2 based on partial pressures. The O_2 analyzer range was set at 0 to 25 percent.

NO_X concentrations were determined utilizing a Thermo Environmental Model 10 chemiluminescence analyzer. This analyzer catalytically reduces NO_X in the sample gas to nitrogen oxide (NO). The gas is then converted to excited nitrogen dioxide (NO_2) molecules by oxidation with ozone (O_3) (normally generated by ultraviolet light). The intensity of the emitted energy from the excited NO_2 is proportional to the concentration of NO_2 in the sample. The efficiency of the catalytic converter in making the changes in chemical state for the various NO_X is checked as an element of instrument setup and checkout. The NO_X analyzer was operated on a range of 0 to 100 parts per million (ppm), and 0 to 1,000 ppm at 50 percent load without CO control.

A Thermo Environmental Model 48C gas filter correlation analyzer with an optical filter arrangement and NDIR detector was used to determine CO concentrations. This method provides high specificity for CO. Gas filter correlation uses a constantly rotating filter with two separate 180-degree sections (much like a pinwheel). One section of the filter contains a known concentration of CO, and the other section contains an inert gas without CO. These two values are “correlated,” based upon the known concentrations of CO in the filter, to determine the concentration of CO in the sample gas. The CO analyzer was also operated on a range of 0 to 100 ppm.

THC concentrations in the exhaust gas were measured using a JUM Model VE-7 flame ionization analyzer. This detector analyzes gases on a wet, unconditioned basis. Therefore, a second heated sample line was used to deliver unconditioned exhaust gases directly to the THC analyzer. All combustible hydrocarbons were being analyzed and reported, and the emission value was calculated on a methane basis.

Concentrations of VOCs were determined as THCs less the CH_4 in the gas stream in accordance with EPA Method 18. Integrated gas samples were collected in Tedlar bags and shipped to a certified laboratory for analysis. In the laboratory, samples were directed to a Hewlett Packard 5890 Series II gas chromatograph (GC) using a VICI 6-port gas loop injection system. The GC was equipped with a flame ionization detector (FID). The GC/FID was calibrated with appropriate certified calibration gases. Two replicate samples were collected, and all samples submitted were analyzed in triplicate.

The instrumental testing for CO_2, O_2, NO_X, CO, and THCs yielded concentrations in units of ppm and ppm corrected to 15 percent O_2. EPA Method 19 was followed to convert the concentration values into exhaust gas emission rates in units of pounds per hour (lb/hr). For this testing, the calculated lb/hr emission rates were also normalized to turbine output and reported as pounds per kilowatt hour (lb/kWh).

The fundamental principle of Method 19 is based upon "F-factors." F-factors are the ratio of combustion gas volume to the heat content of the fuel (e.g., standard cubic feet per million Btu). This method includes all calculations required to compute the F- factors and provides guidelines on their use. The F-factors used to determine emission rates during each test period were calculated using the actual gas composition determined for the fuel samples collected. Equation 19-13 of Method 19 was followed to calculate the F-factors in units of dry standard cubic feet per million Btu (dscf/MMBtu). After converting the pollutant concentrations from a ppm basis to lb/dscf, the calculated F-factor was used, in conjunction with the measured heat input to the turbine (MMBtu/hr), and the measured oxygen concentration (dry basis), to determine emission rates in lb/hr using the following equation.

$$\textit{Mass Emission Rate (lb/hr)} = \textit{HI} * \textit{Concentration} * \textit{F-Factor} * [20.9 / (20.9 - \%\ O_{2,d})] \qquad \textit{(Eqn. 2)}$$

Where:

HI = heat input (MMBtu/hr)
Concentration = measured pollutant concentration (lb/dscf)
F-factor = calculated exhaust gas flow rate (dscf/MMBtu)
$O_{2,d}$ = measured oxygen level in exhaust stack, dry basis (%)

2.0 VERIFICATION RESULTS

2.1. OVERVIEW

The CO control system was tested on April 11, 2001, the day after completion of the initial verification load testing and installation of the CO emissions control equipment. Two series of load tests were conducted at 50 and 75 percent of rated power output for comparison to efficiencies and emissions measured at the same loads without CO control. Single test runs were conducted on April 12 to document Turbogenerator efficiencies at 90 and 100 percent of capacity. Emission rates were not measured at these loads because earlier tests showed that uncontrolled emissions of CO were not detectable at these loads.

Section 2.2 summarizes electric power production performance and Section 2.3 summarizes Turbogenerator emission performance. An assessment of the quality of data collected throughout the verification testing is provided for each measurement in Section 3.0. The data quality assessment is then used to demonstrate whether the data quality objectives (DQOs) introduced in the Test Plan were met for this verification.

2.2. ELECTRIC POWER PRODUCTION PERFORMANCE

During the initial verification test, three test runs were conducted at the four test loads and power output, fuel flow rate, ambient temperature, barometric pressure, and relative humidity were continuously recorded during each. These load tests were repeated after installation of the CO emissions control. Because emissions were not measured during the repeat tests at 90 and 100 percent loads, only one test run of approximately 15 minutes each were conducted for efficiency determinations at these loads (this test duration satisfies PTC22 requirements).

Following the PTC22 guidelines, electric power output and fuel flow rate were collected over time intervals of not less than 4 minutes and not greater than 30 minutes to compute electrical efficiency. This restriction minimizes the uncertainty in efficiency determination due to varying operating conditions. The maximum variation allowed in power output, power factor, fuel input, and atmospheric conditions was satisfied for each of these parameters (see Section 3.2.1 for discussion of data quality), and the PTC22 criteria for stable operation were satisfied for each load test. Table 2-1 summarizes the power output, fuel input, and efficiency results.

All load testing conducted without CO control occurred during relatively consistent atmospheric conditions and were near the levels defined as standard conditions by the International Standards Organization (temperature of 60 ^{o}F, barometric pressure of 14.7 psia, and RH of 60 percent). Unfortunately, the load tests conducted with CO emissions control were conducted during periods of lower ambient temperatures and very high humidity (approximately 91 percent) which likely reduced Turbogenerator efficiency compared to the initial test. The LHV results were consistent for all samples collected, with values ranging between 943.9 and 950.3 Btu/ft^3. The reader is cautioned that the results shown in Table 2-1 and the discussion that follows are representative of conditions encountered during testing, and do not necessarily indicate performance at other operating conditions (e.g., warmer temperatures and lower humidity). Power output and efficiency include the use of a fuel gas booster compressor, which is optional equipment for customers where high-pressure gas is not available, and consumes about 5 percent of the electricity produced. More details regarding the compressor and Turbogenerator performance for industrial facilities with high-pressure gas are presented in the initial Verification Report.

During the initial verification, the average electrical power delivered (after the transformer) was about 71 kW at full load, and the average electrical efficiency corresponding to these measurements was 23.45 percent. The efficiency dropped by about 4 percent as power output was reduced by half. Installation of the CO emissions control equipment was not expected to have any significant impact on Turbogenerator power output or efficiency. The tests demonstrate that changes in power production were slight. As shown in Table 2-1, the power delivered by the Turbogenerator after installation of the CO control was comparable but slightly lower (average 0.4 percent lower) to that delivered at the same power command during the initial tests. However, average electrical efficiency was approximately 8.8 percent lower (about 2 percent difference in actual efficiency) during each load test after installation of the CO control.

According to Honeywell, the decrease in efficiency might be due to a weak permanent-magnet generator. The generator produces lower voltage such that the system is unable to operate at its maximum turbine exit temperature. This limitation is further enhanced, particularly during colder ambient temperature, as seen during the CO control test. The decrease in efficiency may also have been caused by the field retrofit process, either a performance change caused by the system retrofit, or the installation itself. Without further testing, the GHG Center could not determine the exact cause of the decrease in efficiency during this testing. Whatever the cause, additional heat input to the unit was needed to maintain power output at the full power command. Heat input was significantly higher during the repeat tests (average heat input increase of 8.4 percent), and subsequent efficiencies were lower. This decrease in efficiency directly corresponds with the 0.4 percent decrease in power output and 8.4 percent increase in heat input.

2.3. EMISSIONS PERFORMANCE

During the initial verification, Turbogenerator emissions were tested to determine emission rates for criteria pollutants (NO_X, CO, and THCs) and greenhouse gases (CO_2 and CH_4). These measurements were conducted at 50, 75, 90, and 100 percent of rated power output, and coincided with the electrical power output and efficiency measurements. At each operating condition, three replicate test runs, each approximately 30 minutes in duration, were conducted. All testing was conducted in accordance with EPA Reference Methods as described in the Test Plan, and listed in Table 1-2. After installation of the CO emission control technology, emissions tests were repeated at 50 and 75 percent of capacity, and results of these tests are compared to emissions measured during the initial verification. The two lowest loads were selected because CO emissions were not detected at the two highest loads during the initial verification.

Emissions in units of ppm corrected to 15 percent O_2 (ppm @ 15 percent O_2) for NO_X, CO, THCs, and CH_4, and percent for O_2 and CO_2 are reported. These concentration and volume percent values are converted to mass emission rates using computed exhaust stack flow rates, and are reported in units of pounds per hour (lb/hr) using the procedures described in Section 1.4.2. The emission rates are also reported in units of pounds per kilowatt hour (lb/kWh), and were computed by dividing the mass emission rate by the measured power produced by the Turbogenerator. The data reported here characterize Turbogenerator emissions performance before and after installation of the CO emissions control technology.

To ensure the collection of accurate emissions data, sampling system QA/QC checks were conducted in accordance with Test Plan specifications, including analyzer linearity tests, sampling system bias and drift checks, interference tests, and challenging the sampling system with audit gases. Results of the QA/QC checks are discussed in Section 3.2.5 of this report, and will show that the DQOs for these measurements were satisfied. A complete summary of emissions testing equipment calibration data is presented in Appendix A. Appendix A-1 presents results of the analyzer linearity tests that are conducted at the

beginning of each day of testing, or after adjusting the analyzers. Appendix A-2 presents the pre- and post-test system bias and drift checks for each of the tests reported here.

Table 2-2 summarizes the emission results for each run conducted at the 50 and 75 percent loads, and average Turbogenerator emissions before and after installation of the new CO control device. Figures 2-1 and 2-2 provide a graphic representation of measured emissions. Methane emissions test results are provided in Table 2-3. All of the initial tests were conducted on April 10, 2001 and ambient conditions were consistent throughout the day. Temperature ranged from 61.4 to 67.8 ^{o}F, and the RH ranged from 55.1 to 65.2 percent. The repeat tests were conducted on April 11, 2001 during sporadic rain, with temperatures ranging from 52.0 to 52.9 ^{o}F, and RH at a steady 90.9 percent.

Table 2-1. Power and Electrical Efficiency Performance[a]

		Test Condition		Power Delivered[b]	Fuel Input (Natural Gas)			Ambient Conditions		Electrical Efficiency[d]
Test ID	Date	% of Rated Power	Power Command (kW)	(kW)	Flow Rate (scfm)	LHV[c] (Btu/ft^3)	Heat Input (Btu/hr)	Temp. (^{o}F)	RH (%)	(%)
Tests conducted without CO emissions control										
Run 1				71.28	18.19		1,037,157	61.78	65	23.45
Run 2				71.25	18.14		1,034,307	61.69	64	23.51
Run 3	4/10/01	100	75	71.24	18.23		1,039,438	62.71	61	23.39
Average				**71.26**	**18.19**	**950.30**	**1,036,967**	**62.06**	**63**	**23.45**
Run 4				64.63	16.58		945,358	64.44	58	23.33
Run 5	4/10/01			64.71	16.74		954,481	65.78	56	23.13
Run 6		90	68	64.78	16.72		953,341	67.13	55	23.19
Average				**64.71**	**16.68**		**951,060**	**65.78**	**56**	**23.22**
Run 7				53.40	14.12		801,960	66.68	56	22.72
Run 8	4/10/01			53.35	14.08		799,688	66.12	55	22.76
Run 9		75	56	53.33	14.14	**946.60**	803,095	65.63	56	22.66
Average				**53.36**	**14.11**		**801,581**	**66.14**	**56**	**22.71**
Run 10				35.91	10.93		620,452	67.79	57	19.75
Run 11	4/10/01			35.91	10.86		616,479	66.20	61	19.88
Run 12		50	38	35.88	10.88	**946.10**	617,614	64.76	62	19.82
Average				**35.90**	**10.89**		**618,182**	**66.25**	**60**	**19.82**
Tests conducted with CO emissions control										
Run 7-c		**100**	**75**	**71.15**	**19.91**		**1,127,583**	**55.39**	**93**	**21.53**
Run 8-c	4/12/01	**90**	**68**	**64.66**	**18.20**	**943.90**	**1,030,739**	**56.05**	**92**	**21.40**
Run 1-c				53.03	15.48		878,366	52.01	91	20.60
Run 2-c	4/11/01			53.05	15.45	**945.70**	876,664	52.14	91	20.65
Run 3-c		75	56	53.05	15.45		876,664	52.41	91	20.65
Average				**53.04**	**15.46**		**877,231**	**52.19**	**91**	**20.63**
Run 4-c				35.68	12.03		681,307	52.84	91	17.87
Run 5-c	4/11/01			35.68	12.03		681,307	52.89	91	17.87
Run 6-c		50	38	35.70	12.03	**943.90**	681,307	52.84	91	17.88
Average				**35.69**	**12.03**		**681,307**	**52.86**	**91**	**17.87**

[a] Shaded areas represent test runs conducted with the CO emissions control equipment.
[b] Represents actual power available for consumption at the test site. Includes losses from booster compressor and 480 volt transformer.
[c] Lower Heating Value (LHV). For Runs 6, 9, 11, 2-c, and 5-c, LHV results are based on actual gas samples collected during these runs. LHV for all remaining runs is assigned the same value as directly measured data for the most recently collected samples.
[d] Includes power consumed by booster compressor and 480 volt transformer.

Table 2-2. Summary of Turbogenerator Emissions Performance

Test ID	Power Output (kW)	Ambient Temp. (°F)	Relative Humidity (%)	Exhaust O_2 (%)	CO Emissions			NO_x Emissions			THC Emissions			CO_2 Emissions		
					ppm @ 15% O_2	lb/hr	lb/kWh	ppm @ 15% O_2	lb/hr	lb/kWh	ppm @ 15% O_2	lb/hr	lb/kWh	%	lb/hr	lb/kWh
Runs conducted before installation of CO Emission Control - April 10, 2001																
7	53.40	66.7	55.6	18.97	61.4	0.108	2.03E-03	28.4	0.0823	1.54E-03	< 5.0	<6.2E-03	<1.2E-04	1.13	95.6	1.79
8	53.35	66.1	55.1	18.94	54.1	0.0951	1.78E-03	27.7	0.0799	1.50E-03	< 5.0	<6.0E-03	<1.1E-04	1.13	93.8	1.76
9	53.33	65.6	55.7	18.94	56.1	0.0993	1.86E-03	27.6	0.0803	1.51E-03	< 5.0	<6.1E-03	<1.1E-04	1.13	94.3	1.77
AVG	**53.36**	**66.1**	**55.5**	**18.95**	**57.2**	**0.1008**	**1.89E-03**	**27.9**	**0.0808**	**1.51E-03**	**< 5.0**	**<6.1E-03**	**<1.1E-04**	**1.13**	**94.6**	**1.77**
10	35.91	67.8	57.0	19.24	730.5	0.9951	2.771E-02	42.7	0.0956	2.66E-03	40.2	3.13E-02	8.71E-04	1.00	76.2	2.12
11	35.91	66.1	60.8	19.24	780.3	1.056	2.940E-02	42.4	0.0941	2.62E-03	47.8	3.68E-02	1.03E-03	1.00	75.6	2.11
12	35.88	61.4	64.5	19.22	831.4	1.127	3.142E-02	41.5	0.0924	2.58E-03	59.9	4.66E-02	1.30E-03	0.99	74.2	2.07
AVG	**35.90**	**65.1**	**60.8**	**19.23**	**780.7**	**1.059**	**2.951E-02**	**42.2**	**0.0940**	**2.62E-03**	**49.3**	**3.82E-02**	**1.06E-03**	**1.00**	**75.3**	**2.10**
Runs conducted after installation of CO Emission Control - April 11, 2001																
1-c	53.03	52.0	90.8	18.63	< 5.0	< 0.010	< 1.8E-04	29.7	0.0941	1.77E-03	< 5.0	<5.5E-03	<1.0E-04	1.23	96.9	1.83
2-c	53.05	52.1	90.8	18.63	< 5.0	< 0.0096	< 1.8E-04	29.1	0.0920	1.73E-03	< 5.0	<5.5E-03	<1.0E-04	1.22	95.9	1.81
3-c	53.05	52.4	90.9	18.58	< 5.0	< 0.0096	< 1.8E-04	28.3	0.0895	1.69E-03	< 5.0	<5.5E-03	<1.0E-04	1.24	95.4	1.80
AVG	**53.04**	**52.2**	**90.8**	**18.61**	**< 5.0**	**< 0.010**	**< 1.8E-04**	**29.0**	**0.0919**	**1.73E-03**	**< 5.0**	**<5.5E-03**	**<1.0E-04**	**1.23**	**96.1**	**1.81**
4-c	35.68	52.8	90.9	18.90	< 5.0	0.0075	< 2.1E-04	34.5	0.0848	2.38E-03	137.7	1.176E-01	3.296E-03	1.15	79.7	2.23
5-c	35.68	52.9	90.9	19.18	< 5.0	0.0075	< 2.1E-04	40.3	0.0990	2.78E-03	166.2	1.419E-01	3.978E-03	1.14	91.9	2.58
6-c	35.70	52.8	90.9	18.98	< 5.0	0.0075	< 2.1E-04	35.9	0.0882	2.47E-03	144.2	1.232E-01	3.450E-03	1.14	82.3	2.31
AVG	**35.69**	**52.8**	**90.9**	**19.02**	**< 5.0**	**0.0075**	**< 2.1E-04**	**36.9**	**0.0907**	**2.54E-03**	**149.4**	**1.276E-01**	**3.575E-03**	**1.14**	**84.6**	**2.37**

Shaded areas represent test data collected after installation of CO control technology

Figure 2-1. Average Turbogenerator Emissions at 75 Percent of Full Load

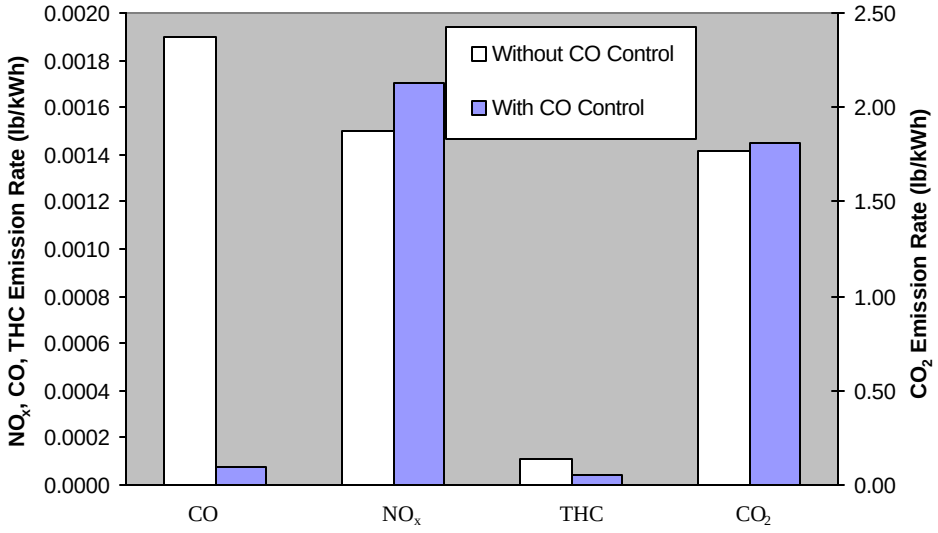

Figure 2-2. Average Turbogenerator Emissions at 50 Percent of Full Load

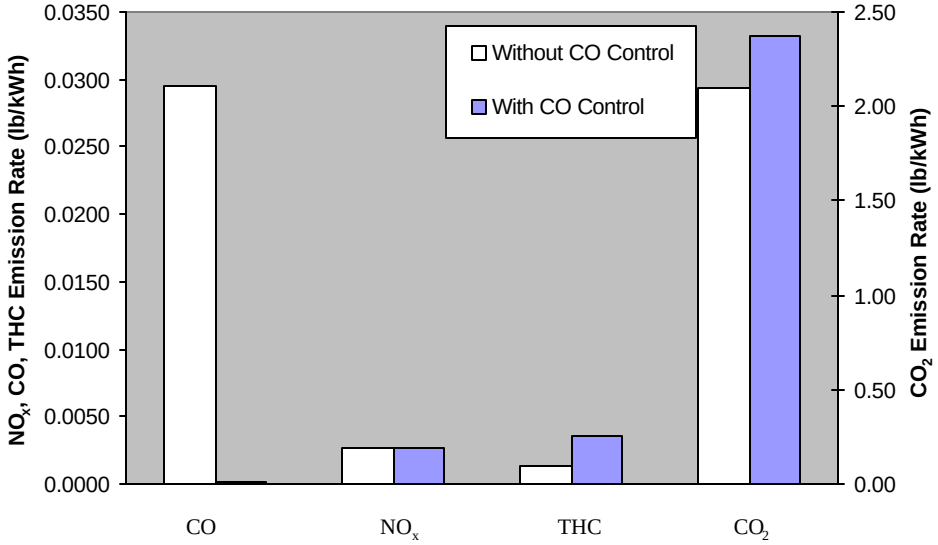

Table 2-3. Average Turbogenerator Methane Emissions at 50 Percent of Full Load			
	ppm @ 15 % O_2	**lb/hr**	**lb/kWh**
Without CO Control	39.6	0.031	0.0009
With CO Control	124.3	0.106	0.0030

The data presented in Table 2-2 and Figures 2-1 and 2-2 clearly demonstrate that installation of the CO control significantly reduced CO emissions. During all testing conducted after installation of CO emissions control, CO emissions were below the lower detection limit of the sampling system (approximately 2 ppm uncorrected). At 75 percent load, average CO reductions were greater than or equal to 90.3 percent, and at 50 percent load, reductions were greater than or equal to 99.3 percent.

However, at both loads tested, the sharp reductions in CO emissions were accompanied by slight increases in CO_2 emissions. Increases in CO_2 emissions were approximately 1.6 percent at the 75 percent load tests, and about 12.5 percent at the 50 percent load tests. Also at the 50 percent load tests, emissions of THCs and CH_4 were about 3 times higher after installation of CO control [although still relatively low when normalized to power output (averaging less than 0.004 lb/kWh)]. THC emissions at the 75 percent test load were not detectable during either set of tests, and therefore no methane analysis was conducted at this load. Increases in CO_2 and THC emissions measured during these tests are likely related to the corresponding increased fuel consumption by the Turbogenerator during these periods. With more fuel (and carbon) entering the system, it is presumable that more carbon-based pollutants will be generated by combustion.

During these tests, NO_X emissions were comparable at both test loads before and after installation of the CO control. With emission rates normalized to power output, significant changes in NO_x emissions were not observed. A comprehensive evaluation of NO_x emissions from the Turbogenerator is provided in the initial Verification Report.

3.0 DATA QUALITY ASSESSMENT

3.1. DATA QUALITY OBJECTIVES

In verifications conducted by the GHG Center and EPA-ORD, measurement methodologies and instruments are selected to ensure that a desired level of data quality occurs in the final results. DQOs were specified for the following verification parameters: power output, electrical efficiency, and emission rate measurements. Table 3-1 lists the uncertainty levels targeted for these parameters.

Table 3-1. Data Quality Objectives

Verification Parameter	Required	Actual
Power Output	± 0.20 % at full load	± 0.05 % at full load
Electrical Efficiency	± 0.75 % at full load	± 0.08 % at full load
Emission Levels		
NO_X	Bias: ± 2 % of span	NO_X: ≤ 1.0 % of span
CO	Bias: ± 5 % of span	CO: ≤ 2.0 % of span
CO_2	Bias ± 5% of span	CO_2: ≤ 2.2 % of span
THCs	Bias: ± 5 % of span	THCs: < 2.8 % of span

To determine if the DQOs were met, data quality indicator goals (DQIs) were established for key measurements performed in the verification test. The goals, specified in Table 3-2, identified accuracy, precision (emission testing only), and completeness DQIs that must be achieved. The following discussion illustrates that the accuracy and precision goals were met or exceeded, and completeness goals were met for the load tests. As such, the uncertainty objectives listed in Table 3-1 were satisfied.

3.2. EVALUATION OF DATA QUALITY GOALS AND INDICATORS

Table 3-2 includes the range of measurements observed in the field and accuracy and completeness goals. Completeness is defined as the number of valid determinations obtained as a percent of the total tests originally planned. The completeness goals for the load tests were to obtain electrical efficiency and emission rate data for all three test runs within each of two load conditions, and to analyze a minimum of one gas sample during each of the two load test conditions. These completeness goals were met. Table 3-2 also includes accuracy goals for measurement instruments used in the verification. Measurement accuracy was evaluated using instrument calibrations conducted by manufacturers, field calibrations, reasonableness checks, and/or independent performance checks with a second instrument. The accuracy results for each measurement and reconciliation of the DQOs are discussed below.

Table 3-2. Summary of Data Quality Indicator Goals and Results

Measurement Variable		Instrument Type / Manufacturer	Instrument Range	Operating Range Observed in Field	Accuracy			Completeness	
					Goal	Actual	How Verified / Determined	Goal	Actual
Turbogenerator Power Output	Power	Electric Meter/ Power Measurements 7600 ION	0 to 75 kW	0 to 73 kW	± 0.20 % reading	± 0.05 % reading	Instrument calibration certificates from manufacturer just prior to testing, sensor function checks in field	At least 1 valid run per load using PTC 22 criteria	3 valid runs at 75 and 50 % load, 1 at 100 and 90 % load
	Voltage		0 to 480 V (3-phase)	0 to 480 V (3-phase)	± 0.1 % reading	± 0.1 % reading			
	Current		0 to 200 amps	0 to 200 amps	± 0.1 % reading	± 0.1 % reading			
Ambient Conditions	Ambient Temperature	RTD / Vaisala Model HMP 35A	-50 to 150 °F	25 to 65 ° F	± 0.2 °F	± 0.2 °F	Instrument calibration certificates from manufacturer just prior to testing	1-minute readings during all test periods	1-minute readings during all test periods
	Ambient Pressure (load tests)	Vaisala Model PTB220 Class B	14.80 to 32.56 in. Hg	28 to 31 in. Hg	± 0.1 % FS	0.1 % FS			
	Relative Humidity	Vaisala Model HMP 35A	0 to 100 %	40 to 95 % RH	± 2 % (0 to 90 % RH) ± 3 % (90 to 100 % RH)	± 2 % (0 to 90 % RH,) ± 3 % (90 to 100 % RH)			
Fuel Input	Gas Flow Rate	American Meter AL-425	0 to 25 scfm	0 to 20 scfm	1.0 % of reading	0.4 % of reading	Calibrated by utility with volume prover (primary standard)	At least 1 valid run per load using PTC 22 criteria	3 valid runs at 75 and 50 % load, 1 at 100 and 90 % load
		Mass Flow Meter / Rosemount 3095 w/ 1195 orifice	0 to 20 scfm	0 to 20 scfm		+ 5.28 % at full load, +0.12 % at 50 % load	In-line comparison with calibrated dry gas meter in field and comparison with a calibrated dry gas meter in laboratory		
	Gas Pressure	Pressure Transducer / Rosemount or equiv.	0 to 20 psig	0 to 3 psig	± 0.75 % FS	± 0.75 % FS	Instrument calibration certificates from manufacturer just prior to testing, reasonableness checks in field		
	Gas Temperature	RTD / Rosemount Series 68	-58 to 752 °F	20 to 60 °F	± 0.09 % reading	± 0.09 % reading			
	LHV	Gas Chromatograph / HP 589011	0 to 100 % CH_4	90 to 95 % CH_4	± 0.2 % for CH_4 concentration	± 0.2 % for CH_4 concentration	Analysis of NIST-traceable CH_4 audit sample	One sample per load	Two samples invalidated
					± 0.1 % for LHV for duplicate analyses	average ± 0.1 % for LHV	conducted duplicate analyses on 3 samples		

(continued)

Table 3-2. Summary of Data Quality Indicator Goals and Results (continued)

Measurement Variable		Instrument Type / Manufacturer	Instrument Range	Operating Range Observed in Field	Accuracy			Completeness	
					Goal	Actual	How Verified / Determined	Goal	Actual
Exhaust Stack Emissions	NO_X Levels	Chemiluminescence / TECO Model 10	0 to 100 ppm	7 to 12 ppm	± 2 % FS for system cal. error and drift	≤ 1.0 % FS for calibration error and < 0.3 % for drift	Calculated following EPA Reference Method calibrations	3 valid runs per load	3 valid runs per load
	CO Levels	NDIR / TECO Model 48C	0 to 100 ppm/ 0 to 1,000 ppm	0 to 240 ppm	± 5 % FS for system bias and ± 3 % FS for drift	Bias: ≤ 2.0 % FS Drift: ≤ 1.5 % FS			
	THC Levels	FID / JUM Model VE-7	0 to 100 ppm	0 to 20 ppm	± 5 % FS for system cal. error and ± 3 % FS for drift	≤ 2.8 % FS for calibration error and < 1.3 % for drift			
	CO_2 Levels	NDIR / Servomex Model 1400	0 to 20 %	1 to 1.3 %	± 5 % FS for system bias and ± 3 % FS for drift	Bias: ≤ 2.2 % FS Drift: ≤ 0.5 % FS			
	CH_4 content	GC / FID HP Model 5890 Series II	0 to 100 ppm	0 to 50 ppm	± 5 % FS	± 10 % FS*			
	O_2 Levels	Micro-fuel-cell/ Servomex Model 1400	0 to 25 %	18 to 20 %	± 5 % FS for system bias and ± 3 % FS for drift	Bias: ≤ 1.1 % FS Drift: ≤ 1.1 % FS			

FS: full scale
NA: not applicable
* The accuracy goal for CH_4 was misstated in the Test Plan and was not achieved. The nature of Method 18 is such that collection of gas in a bag, injection of a sample into the analytical equipment, and analytical quantification is generally expected to result in errors of around ± 10 percent of reading.

3.2.1. Electrical Efficiency Determination

The DQO for electrical efficiency was to achieve an uncertainty of ± 0.75 percent, which exceeds the "typical uncertainty" levels set forth in PTC22 of 1.7 percent. The DQIs specified to meet this objective consisted of achieving a ± 0.2 percent accuracy for the power meter, ± 1.0 percent accuracy for the fuel flow meter, and ± 0.2 percent accuracy goal for fuel heating value. The accuracy goals for each measurement were met, and in some cases they were exceeded. The following summarizes actual errors achieved, and the methods used to compute them.

Power Output: Factory calibrations of the 7600 ION with NIST-traceable standard resulted in ± 0.05 percent error in power measurement. Reasonableness checks were performed in the field to ensure data quality. Comparisons of voltage and current output with a handheld digital multimeter, and comparisons with SCADA output passed the required criteria. As a result, the power meter was verified to be functioning properly, and factory calibration result was used to compute errors in electrical efficiency. Complete documentation of data quality results is provided in Section 3.2.2.

Fuel Flow Rate: The dry gas meter was calibrated by the gas company using a volume prover, before and after testing. The calibration proof was 99.6 percent at full scale. The dry-gas meter readings were corrected to standard conditions using actual gas temperature and pressure measurements. Both meters were calibrated with NIST-traceable standards prior to use in the field, and resulted in a ± 0.2 percent error in flow rates. This value was used to compute errors in electrical efficiency. Complete documentation of data quality results is provided in Section 3.2.3.

Fuel LHV: Data quality of fuel analysis was performed by comparing laboratory results with NIST-traceable audit gas, conducting duplicate analysis of the same sample, and collecting replicate samples in the field. The Test Plan specified using the results of duplicate analysis to compute electrical efficiency error. As discussed in Section 3.2.4, all QA/QC procedures resulted in generally good quality data. The LHV goal of ± 0.1 percent was satisfied exactly.

Based the actual errors achieved in power output, fuel flow rate, and fuel LHV measurements, electrical efficiency error was less than 0.08 percent at all loads (i.e., at full load, average efficiency was 22.53 ± 0.08 percent).

Per ASME PTC22 guidelines, efficiency determinations were to be performed within time intervals in which maximum variability in key turbine operational parameters did not exceed specified levels. Table 3-3 summarizes the maximum permissible variations observed in power output, power factor, fuel flow rate, barometric pressure, and ambient temperature. As shown in Table 3-3, the requirements for all parameters were met for each of the 14 test runs.

Table 3-3. Variability Observed In Operating Conditions

Measured Parameter	Maximum Allowed Variation[a] In Test Conditions														
	Allowed Under PTC 22	Actual (Run Number)													
		7	8	9	10	11	12	1-c	2-c	3-c	4-c	5-c	6-c	7-c	8-c
Power Output (%)	± 2	0.12	0.10	0.11	0.17	0.18	0.17	0.13	0.21	0.15	0.34	0.21	0.28	0.11	0.08
Power Factor (%)	± 2	0.01	0.01	0.01	0.01	0.02	0.02	0.01	0.02	0.02	0.03	0.03	0.02	0.01	0.01
Fuel Flow Rate[b] (%)	± 2	1.63	1.57	2.06	0.82	0.48	0.42	1.70	2.23	1.71	0.73	0.95	0.80	0.09	0.62
Inlet Air Pressure (%)	± 0.5	0.10	0.07	0.06	0.07	0.07	0.08	0.02	0.14	0.10	0.08	0.09	0.10	0.09	0.11
Inlet Air Temperature (^oF)	± 4	2.30	1.07	1.02	0.84	1.02	0.67	0.17	1.06	0.61	0.49	0.23	0.91	0.92	0.38

[a] = (Average of Test Run – Observed Value) / Average of Test Run * 100

[b] As discussed later in section 3.2.3, a positive bias in the integral orifice readings was observed. These data were not used to compute electrical efficiency, but are used to demonstrate the overall stability in gas flow rates within a test run. The data in the table are corrected per equation shown in Figure 3-1 (see Section 3.2.3).

3.2.2. Power Output Measurements

Instrumentation used to measure the power produced by the Turbogenerator was introduced in Section 1.0 and included a 7600 ION. For power output, the data quality objective was set at ± 0.2 percent in the Test Plan. This equates to an error of ± 0.14 kW at full load, which is more stringent than the "typical uncertainty" as set forth in PTC22 of 1.8 percent.

The DQIs for the meter with respect to accuracy of power, current, and voltage are summarized in Table 3-2. The meter was factory calibrated by Power Measurements prior to being delivered to the test site. Calibrations were conducted in accordance with Power Measurements strict standard operating procedures (in compliance with ISO 9002-1994) and are traceable to NIST standards. Pre-test factory calibration on the meter indicated that the error was within ± 0.05 percent of reading across the entire range, exceeding the DQI goals for power output. The meter was certified by Power Measurements to meet or exceed the accuracy values summarized in Table 3-2 for power output, voltage, current, and frequency. Copies of the calibration certificates are maintained at the GHG Center.

Additional QC checks were performed in the field to verify the operation of the electrical meters, as shown in Table 3-4. To check power output, Turbogenerator power measured using the 7600 ION was compared to the power output reported by the Turbogenerator's software system (reports total power generated). During this check, the ION reported 70.65 kW of power delivered to the building during steady-state operation at full load. Adding the power consumed by the fuel compressor (about 4.36 kW) to the total power output reported by the 7600 ION yielded 75.01 kW of total power generated. During this time, the Turbogenerator SCADA system reported a power output of 74.9 kW. Current and voltage readings were also checked for reasonableness using a handheld Fluke Multimeter. These checks confirmed that the voltage and current readings from the 7600 ION were within 1 percent of the readings obtained with the Fluke.

Table 3-4. Results of Additional QA/QC Checks

Measurement Variable	QA/QC Check	When Performed/Frequency	Allowable Result	Results Achieved
Power Output	Reasonableness checks	Throughout test	Readings should range between 70 and 74 kW at full load	All readings at full load between 70 and 72 kW (Figure 2-1)
	Comparison with SCADA power output report	Beginning of verification test	Within ± 1 % reading	Readings within 0.1 %
	Sensor diagnostics in field – voltage and current comparisons with a digital multimeter	Beginning of verification test	Voltage and current checks within ± 1 % reading	± 0.82 % voltage ± 1.03 % current
Fuel Flow Rate	Sensor diagnostics	Beginning and end of verification test	Pass	Passed all sensor diagnostic checks
	Independent performance check with a dry gas meter	Beginning and end of verification test	Average percent difference between the two meters should be less than ± 2.0 %	Positive bias at high flow rates (see discussion in section 3.2.3)
	Reasonableness checks	Throughout test	Readings should be between 17 and 20 scfm at full load	All readings within specified range
Fuel Heating Value	Replicate samples collected in field	Once during each load testing	Average percent difference between replicates should be less than ± 0.2 %	Replicate samples differ by 0.27 % (excluding invalid samples)
Ambient Meteorological Conditions	Reasonableness checks	Throughout test	Recording should be comparable with airport data	Readings were consistent with monitoring station
Fuel Gas Pressure	Reasonableness checks	Throughout test	Readings should range between 1 and 3 psig	All readings were within specified range

3.2.3. Fuel Flow Rate Measurements

The Test Plan specified the use of an integral orifice meter (Rosemount Model 3095) to measure the flow of natural gas supplied to the Turbogenerator. The integral orifice meter was factory calibrated prior to installation in the field, and its calibration records were reviewed to ensure that the instrument rated ± 1 percent accuracy was satisfied. The factory calibration is reported to be valid for 3 years, and so it was deemed unnecessary to recalibrate the meter over the duration of the test.

Several QC checks, listed in Table 3-4, were conducted to ensure proper function in the field. These included specifying actual natural gas properties (e.g., gas composition and gas density at standard conditions determined through heating value measurements) into the Rosemount Engineering Assistance software, and maintaining written records of user-supplied input parameters. In addition to this, QC checks were performed immediately prior to load testing which included: (1) sensor diagnostic checks and (2) independent verification with a second meter. Sensor diagnostic checks consisted of zero flow verification by isolating the meter from the flow stream. The sensor output must read 0 flow during these checks. Transmitter analog output checks, known as the loop test, consist of checking the meter's current against a fluke multimeter to ensure that 4 and 20 mA signals are produced. Finally, a dry-gas meter, installed in series by the local utility, was used to independently verify the Rosemount flow meter output.

The dry gas meter was calibrated by the utility using a volume prover, and the meter calibration proof was 99.6 percent at full scale.

Despite extensive QC checks, the data collected with the integral orifice meter were invalidated due to a positive bias observed at high flow regimes (12 to 19 scfm). Upon further investigation and communications with Rosemount technicians, it was concluded that pipe fittings, installed close to the upstream and downstream sides of the integral orifice, created turbulence and likely caused the meter to read higher flow rates. Two separate pipe couplings were installed immediately before and after the meter assembly (Figure 1-4), so the meter could be easily dismantled after the field test was completed. Orifice-type meters are designed to operate in an undistributed flow field such that the velocity distribution, formed by the restriction created by the orifice plate, is normally distributed between two separate pressure sensor taps. Accurate measurement of flows relies on the pressure drop measurements across the orifice plate and experimentally derived orifice coefficients which relate flow as a function of orifice diameter to pipe diameter and Reynolds number. It is hypothesized that the additional disturbances caused by the couplings resulted in a change in these relationships.

Fortunately, a backup flow meter was available at the test site. A dry-gas meter, certified and supplied by a local gas company, was installed in series with the integral orifice meter, and its data were used to report fuel consumption rates and compute electrical efficiency for the Turbogenerator.

Dry-gas meter flow rates during a single load test were computed by taking manual dry-gas meter readings over the entire test period [in units of actual cubic feet (acf)], and then correcting the dry-gas meter readings to standard conditions. Actual gas pressure and temperature measurements data, collected simultaneously with the GHG Center's calibrated equipment, were used in Equation 3. The fuel flow variability data presented in Table 3-3 indicate that very little variation existed, and therefore the averages computed using this procedure are highly representative.

$$\text{Dry-gas meter reading (scf)} = \text{Gas volume measured (acf)} * (T_{std}/T_g) * (P_g/P_{std}) * C_m \qquad (\textit{Eqn. 3})$$

Where:
T_{std} = standard temperature (519.67 ^oR)
T_g = measured gas temperature (^oR)
P_g = measured gas pressure (psia)
P_{std} = standard pressure (14.696 psia)
C_m = meter calibration coefficient (99.6 %)

The standardized gas volume was then divided by the duration of the sampling interval to yield average gas flow as standard cubic feet per minute (scfm). This totaled volume method of computing fuel consumption was adequate for computing electrical efficiency; however, 1-minute fuel flow rates were needed to determine if the PTC22 requirements for maximum permissible variation were satisfied (discussed in Section 3.2.1). To perform this check, the orifice meter data were corrected to reduce the impact of the observed bias. This was done using a correlation developed from comparisons of the orifice meter flow data with the dry gas meter flows.

Comparisons between the integral orifice meter and the in-line dry gas meter for each test run conducted are presented in Table 3-5.

Table 3-5. Comparison of Integral Orifice Meter With Dry Gas Meter During Load Testing

Test Condition (% of Rated Power)	Power Delivered (kW)	Average Integral Orifice Meter Reading (scfm)	Average Gas Pressure (psia)	Average Gas Temp. (^{0}F)	Dry-Gas Meter Reading (scfm)	Percent Difference[a] (%)
75	53.40	14.42	17.07	67.25	14.12	2.08
	53.35	14.39	17.09	67.03	14.08	2.15
	53.33	14.38	17.08	67.25	14.14	1.67
50	35.91	10.90	17.15	68.60	10.93	-0.28
	35.91	10.89	17.13	67.85	10.86	0.28
	35.88	10.92	17.13	66.75	10.88	0.37
75	53.03	16.15	16.36	52.01	15.48	4.15
	53.05	16.11	16.36	52.14	15.45	4.10
	53.05	16.08	16.35	52.41	15.45	3.92
50	35.68	12.09	16.58	52.84	12.03	0.50
	35.68	12.11	16.58	52.89	12.03	0.66
	35.70	12.10	16.58	52.84	12.03	0.58
100	71.15	20.90	15.91	55.39	19.91	4.74
90	64.66	19.27	16.06	56.05	18.20	5.55

[a] = (Integral Orifice Reading – Dry Gas Reading)/Integral Orifice Reading * 100

As shown in the table, the greatest differences were observed during full, 75, and 90 percent load test runs. At low load test runs, the difference was within the tolerable error specified in the test plan. Due to these observed differences, additional measurements data were collected in the field and the GHG Center's laboratory to further substantiate and support using the integral orifice meter readings to satisfy the requirements of PTC22, and computing performance results for the Turbogenerator. At the conclusion of the test, the entire integral orifice assembly, complete with associated piping and fittings, was dismantled, brought to the GHG Center's laboratory, and reassembled exactly as it was in the field to perform independent verification with a second dry gas meter. The reference dry-gas meter was an Equimeter Model 750, calibrated to a proof of 100.0 percent in March 2001 by Standard Gas Meter, Inc. using a volume prover. Figure 3-1 illustrates the meter comparison data collected in the field and in the laboratory, and shows the equation developed to correct the integral orifice data.

As shown in Figure 3-1, the meter reading differences observed in the laboratory are similar to the field measurements, and demonstrate a positive bias at the upper flow rates (+ 4.48 percent). Figure 3-1 also shows a linear relationship in the field and laboratory comparisons, and the linear regression equation (shown in Figure 3-1) was used to determine maximum permissible variation observed in the natural gas flow rates.

Figure 3-1. Integral Orifice Meter Correction Factor

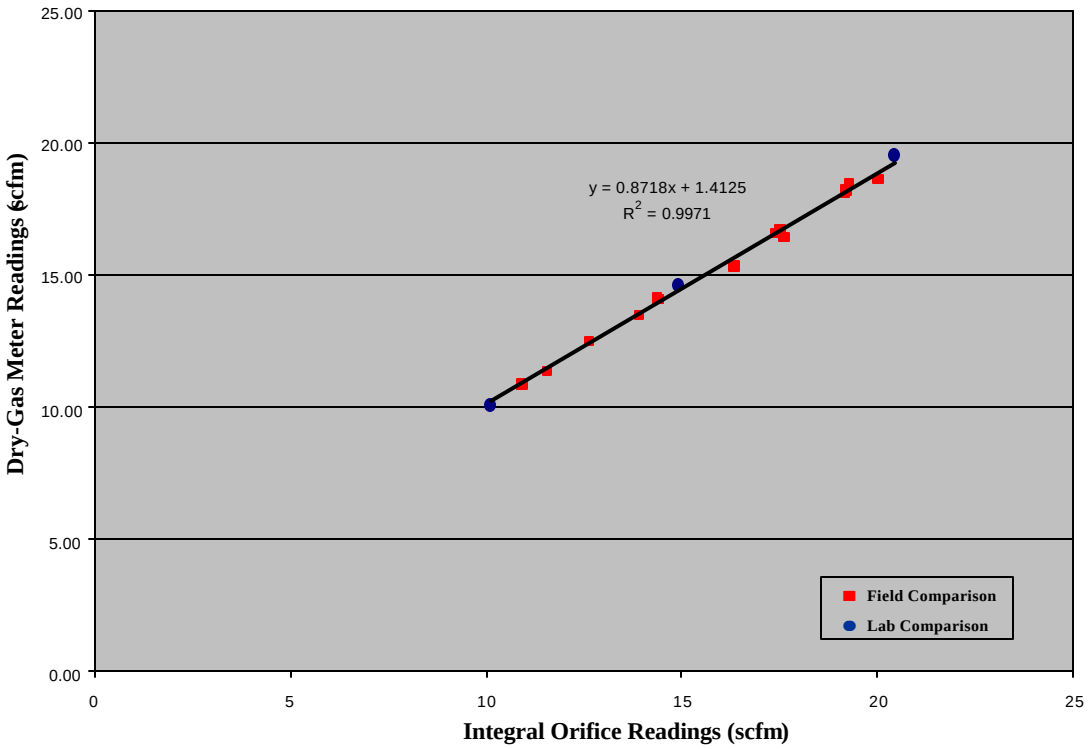

3.2.4. Fuel Heating Value Measurements

Fuel gas samples were collected no less than once per test load condition. Full documentation of sample collection date, time, run number, and canister ID was logged along with laboratory chain of custody forms and shipped along with the samples. Copies of the chain of custody forms, field logs, and results of the analyses are stored in the GHG Center project files. Collected samples were shipped to Core Laboratories for compositional analysis and determination of LHV per ASTM test methods D1945 and D3588, respectively. The data quality indicator goals for fuel sampling and analysis were:

- $\pm$ 0.2 % error in CH_4 concentration on NIST-traceable calibration gas and a blind audit sample
- $\pm$ 0.1 % difference on duplicate analysis of one sample

Core Laboratory calibrated the GC/FID daily using a continuous calibration verification standard. The results for all gas species were within the ASTM specified levels, including methane, which was within the GHG Center's specified level. A blind audit sample was submitted to the laboratory along with the samples. The audit was collected in a sample canister using the same procedures used in the field. A cylinder of compressed methane was used to generate the audit. The cylinder was certified to be at least 99.7 percent pure methane, and the laboratory returned a result of 99.89 percent, for a maximum error of 0.19 percent which meets the DQI goal.

For some of the samples, duplicate analyses were performed by the laboratory to verify repeatability. These results were used to determine if the LHV results were within ± 0.1 percent as specified by the GHG Center. Duplicate analyses were conducted on three samples to evaluate analytical repeatability. Table 3-6 summarizes the results, and indicates that the average error in the duplicate analyses was 0.1 percent, which meets the DQI goal.

Table 3-6. Summary of Duplicate Analyses

Sample Collection Date (Time)	Run ID	Methane Content (%)	LHV (Btu/ft³)	Results
4/10/01 (0930)	3[a]	73.41	728.3	LHV differs by 0.1 %
		73.58	727.8	
4/11/01 (1615)	2C	93.68	945.7	LHV differs by 0.2 %
		93.60	943.4	
4/16/01 (1130)	Audit Gas[b] (Blind)	99.89	910.7	LHV differs by 0.0 %
		99.88	910.6	

[a] LHV results were not used in reporting verification results due to sample contamination with air (nitrogen and oxygen levels are high, and the methane concentrations are low). However, the percent difference in duplicate analyses was below the ± 0.1 percent goal, which indicates the laboratory results are repeatable.
[b] Certified by manufacturer to be at least 99.7 percent pure methane

As an additional QC check, three replicate samples, collected simultaneously, were used to assess sampling error (Table 3-7). Two of the replicates were within 0.5 percent. The third replicate conducted the same day disagrees by about 3.3 percent. However, the analytical composition of the primary sample collected during Run 1 is suspicious, and was invalidated. Specifically, the methane level in that sample is atypically high, and no ethane was reported in the analysis (all other samples reported ethane concentrations around 3 to 4 percent).

Table 3-7. Summary of Replicate Analyses

Sample Collection Date (Time)	Run ID	Sample ID	Methane Content (%)	LHV (Btu/ft³)	Results
12/19/00 (0820)	1	Primary	96.78	910.9	LHV differs by 3.3 %
		Replicate	94.28	941.1	
12/19/00 (1510)	8	Primary	94.25	946.5	LHV differs by 0.5 %
		Replicate	94.37	941.3	
12/20/00 (1602)	12	Primary	94.30	941.5	LHV differs by 0.04 %
		Replicate	94.41	941.1	

3.2.5. Exhaust Stack Emission Measurements

EPA Reference Methods were used to quantify emission rates of criteria pollutants and GHGs. The Reference Methods specify the sampling and calibration procedures, and data quality checks that must be

followed. Use of these methods ensures that run-specific quantification of instrument and sampling system drift and accuracy remains at or below the DQI goals set in the Test Plan. The DQOs specified in the Test Plan were ± 2 percent for NO_X, and ± 5 percent for CO_2, CH_4, CO, and THC emission rate measurements. The data quality indicator goals required to demonstrate compliance with these DQOs consisted of an assessment of: (1) sampling system calibration error and drift for NO_X and THCs and (2) system bias and drift for CO, CO_2, and O_2.

NO_X and THCs

The sampling system calibration error tests on the NO_X and THC sampling systems were conducted prior to the start of the first test. The calibration was conducted by sequentially introducing a suite of calibration gases to the sampling system at the sampling probe, and recording the system response. Calibrations were conducted on all analyzers using Protocol No. 1 calibration gases. Four calibration gases for NO_X and THCs were used, including: 0, 20 to 30 percent of span, 40 to 60 percent of span, and 80 to 90 percent of span. As shown in Table 3-2, the system calibration error goal for NO_X was ± 2 percent, and the actual measured error was ± 1.0 percent which indicates that the goal was met. For THCs, the maximum system calibration error was determined to be ± 2.8 percent, which is also below the stated goal for this parameter.

At the conclusion of each test, the zero and mid-level calibration gases were again introduced to the sampling systems at the probe and the response recorded. System response was compared to the initial calibration error to determine sampling system drift. The sampling system drift was determined to be 0.5 percent for NO_X and 2.1 percent for THCs, which were both below the required goal.

Two additional QC checks were performed to better quantify the NO_X data quality. In accordance with Method 20, an interference test was conducted on the NO_X analyzer once before the testing started. This test confirms that the presence of other pollutants in the exhaust gas do not interfere with the accuracy of the NO_X analyzer. This test was conducted by injecting the following calibration gases into the analyzer and recording the response of the NO_X analyzer, which must be zero ± 2 percent of span. As shown in Table 3-9, the maximum measured value was well below the ± 2 percent of analyzer span required by the method.

- CO – 600 ppm in balance nitrogen (N_2)
- SO_2 – 255 ppm in N_2
- CO_2 – 10 percent in N_2
- O_2 – 22 percent in N_2

The NO_X analyzer converts any NO_2 present in the gas stream to NO prior to gas analysis. The second QC check consisted of determining NO_2 converter efficiency prior to beginning of emissions testing. This was done by introducing to the analyzer a mixture of mid-level calibration gas and air. The analyzer response was recorded every minute for 30 minutes. If the NO_2 to NO conversion is 100 percent efficient, the response will be stable at the highest peak value observed. If the response decreases by more than 2 percent from the peak value observed during the 30-minute test period, the converter is faulty and the analyzer must be either repaired or replaced prior to testing. As shown in Table 3-8, the converter efficiency was measured to be 99.3 percent, which was above the efficiency level required.

CO, CO_2, and O_2

Analyzer calibrations were conducted to verify the error in CO, CO_2, and O_2 measurements relative to calibration gas standards. The calibration error test was conducted at the beginning of each test day, and

again after switching the CO analyzer to a higher range for the low-load testing. A suite of calibration gases were introduced directly to the analyzer, and analyzer responses were recorded. EPA Protocol 1 calibration gases were used for these calibrations. Three gases were used for CO_2 and O_2: 0, 40 to 60 percent of span, and 80 to 100 percent of span. Four gases were used for CO: 0 and approximately 30, 60, and 90 percent of span. The analyzer calibration errors for all gases were below the allowable levels as shown in Table 3-8.

Before and after each test conducted, the zero and mid-level calibration gases were introduced to the sampling system at the probe, and the response was recorded. System bias was calculated by comparing the system responses to the calibration error recorded above. As shown in Table 3-2, the system bias goal for CO, CO_2, and O_2 was $\pm$ 5 percent, and the actual measured values were less than 2.0 percent, 1.4 percent, and 1.1 percent, respectively. The pre- and post-test system bias calibrations were also used to calculate drift for each pollutant. As shown in Table 3-2, the maximum drift measured was 2.0 percent for CO, 2.2 percent for CO_2, and 1.1 percent for O_2. In conclusion, the system bias goals and drift goals were met for all pollutants.

Results of each of the analyzer and sampling system calibrations conducted, including instrument linearity tests and sampling system bias and drift checks, are presented in Appendix A.

Table 3-8. Results of Additional Emissions Testing QC Checks

Parameter	QA/QC Check	When Performed/Frequency	Expected or Allowable Result	Result Measured During Tests
NO_X	Analyzer interference check	Once before testing begins	$\pm$2 % of analyzer span or less	0.54 ppm highest zero reading
	NO_2 converter efficiency	Once before testing begins	98 % efficiency or greater	99.3 percent efficiency
	Audit gas (9.17 ppm NO in N_2)	At the end of test after low NO_X levels were measured	$\pm$ 2 % of analyzer span	8.85 ppm or 0.32 % of span
CO, CO_2, O_2	Analyzer calibration error test	Daily before testing	$\pm$ 2 % of analyzer span or less	1.7 % for CO 1.3 % for CO_2 0.6 % for O_2
CO	Audit gas (9.06 ppm CO in N_2)	At the end of test after low NO_X levels were measured	$\pm$ 5 % of analyzer span	8.91 ppm or 0.15 % of span
CH_4	Calibration with gas standards by certified laboratory	Prior to analysis of each lot of samples submitted	$\pm$ 2 % for CH_4 concentration	10 %*

* The accuracy goal for CH_4 was misstated in the Test Plan and not achieved here. The nature of Method 18 is such that collection of gas in a bag, injection of a sample into the analytical equipment, and analytical quantification is generally expected to result in errors of around $\pm$ 10 percent of reading.

CH_4

As shown in Table 3-2, the laboratory that conducted the methane analyses reported an overall uncertainty in the methane analyses of approximately 10 percent (based on analyzer calibrations to standards), and cited this error as generally acceptable for Method 18. As required by Method 18, a spike and recovery check was also conducted. Using sample 6B collected in the field, a calculated spike value of 36.9 ppm methane was introduced into the sample bag and later analyzed. The analytical result was 41.5 ppm, for a spike and recovery efficiency of 112 percent. This result is well within the Method 18 recovery efficiency requirement of 70 to 130 percent.

NO_X and CO Audit Gas Analysis

Instrument operating ranges and calibration gases were selected based on concentrations expected in the exhaust gas. During testing, very low concentrations of NO_X and CO were measured (NO_X as low as around 7 ppm and CO concentrations below 2 ppm). The low range calibration gases used by the emissions testing contractor were approximately 25.4 ppm for NO_X and 31.8 ppm for CO. Even though both analyzers passed the pretest linearity checks, the GHG Center procured lower range calibration gases to use as an additional QC check for low-range measurements. The gases were introduced to the sampling system as a blind audit, and the system responses were recorded by Center personnel. As shown in Table 3-8, the system measured the audit gas that was within 0.32 and 0.15 percent of span for NO and CO, respectively.

3.2.6. Ambient Measurements

Ambient temperatures and pressures at the site were monitored throughout the load tests. Relative humidity was also recorded during the load test periods. The instrumentation used is identified in Table 3-2 along with instrument ranges, data quality goals, and data quality achieved. The pressure sensor and the relative humidity probe were factory calibrated prior to the verification testing using reference materials traceable to NIST standards. The temperature sensor was calibrated at the U.S. EPA ORD Quality Assurance Laboratory in Research Triangle Park, NC, using a NIST-traceable reference standard. Results of these calibrations indicate that the $\pm$ 2 ^{o}F accuracy goal for temperature, $\pm$ 0.1 percent for pressure, and $\pm$ 3 percent for relative humidity were met. Reasonableness checks were conducted in the field by comparing data monitored with the GHG Center's instrumentation with the verification host-facility's ambient monitoring instrumentation.

4.0 TECHNICAL AND PERFORMANCE DATA SUPPLIED BY HONEYWELL

4.1. INTRODUCTION

Honeywell Power Systems, Inc., a subsidiary of Honeywell International, is the developer and manufacturer of the Parallon® 75 kW Turbogenerator, a compact 75 kW power source that uses a microturbine to convert natural gas or liquid fuels into electricity for on-site power generation and combined heat and power applications. Today the Turbogenerator is field-proven with more than 380,000 hours of operation around the world. It is capable of producing premium power in either grid parallel or stand-alone conditions and can currently be equipped w/ the following options:

- Display Panel (for on-site control and monitoring)
- SCADA (for remote control and monitoring)
- Fully integrated reciprocating gas compressor (for gas pressures 15 to 30 psia)
- Black Start Battery Module/Stand-Alone (for operation without the grid)
- Load Sequencer plus Automatic Grid to Stand-Alone Transition (for automatic backup power)
- Electric Meter with Grid Parallel Load Following
- Internal AutoTransformer for 60 Hz, 120/208V (U.S.) (other voltages/frequencies available)
- External Isolation Transformers for 60 Hz, 277/480V (U.S.) (other voltages/frequencies available)
- Hot Water Cogeneration Module
- Side or Bottom Entry Wiring Kits
- External Protective Relay (satisfies CA and NY utility interconnect requirements)
- Liquid Fuel Option

4.2. ELECTRIC POWER PRODUCTION PERFORMANCE

Honeywell's CO Control Option is designed to reduce CO emissions at all possible running conditions: full power, partial power, and conditions other than those specified as International Organization for Standardization (ISO) conditions. Although designed to have no affect on system efficiency or system output power, a reduction in system efficiency was observed on this system after the CO Option was installed. We believe this may have been due to the field retrofit process. Normally, all Turbogenerator units are made to order. All options are installed at the factory so the systems can undergo complete factory acceptance testing and verification. In this particular case, the option was installed in the field in order to perform back-to-back testing. Typical factory installation procedures in a controlled environment could not be repeated in the field, and factory acceptance testing could not be performed. This field retrofit may have induced a problem, which in turn reduced system efficiency.

5.0 REFERENCES

American National Standards Institute, *National Standard for Electric Power Systems and Equipment - Voltage Ratings (Hertz)*, ANSI C84.1-1995, National Electrical Manufacturers Association, Rosslyn, VA, 1996.

American Society of Mechanical Engineers, *Performance Test Code on Gas Turbines (PTC-22-1997)*, New York, NY, 1997.

American Society for Testing and Materials, *Standard Test Method for Analysis of Natural Gas by Gas Chromatography* (D1945-96e1), West Conshohocken, PA, 2001a.

American Society for Testing and Materials, *Standard Practice for Calculating Heat Value, Compressibility Factor, and Relative Density of Gaseous Fuels* (D3588-98), West Conshohocken, PA, 2001b.

Code of Federal Regulations, Title 40, Part 60 (Subpart GG), *Standards of Performance for Stationary Gas Turbines*, U.S. Environmental Protection Agency, Washington, DC. 1999.

Southern Research Institute. *Environmental Technology Verification Report. Environmental Technology Verification Report for the Honeywell Power Systems, Inc. Parallon® 75 kW Turbogenerator, Research Triangle Park*, NC, September 2001.

APPENDIX A

Appendix A-1. Summary of Emission Analyzer Linearity Tests.....A-2
Appendix A-2 Summary of Reference Method System Error and Drift Checks.....A-3

Appendix A-1 presents instrument calibration error and linearity checks for each of the analyzers used for emissions testing. These calibrations are conducted once at the beginning of each day of testing, and after any changes or adjustments to the sampling system are conducted (changing analyzer range, for example). All of the calibration error results are within the specifications of the Reference Methods.

Appendix A-2 summarizes the system error and drift checks conducted on the sampling system for each pollutant quantified. These system calibrations are conducted before and after each test run. Results of all of the calibrations are within the specifications of the Reference Methods.

Appendix A-1 - Summary of Emission Analyzer Linearity Tests - April 10, 2001

Run Number	Gas	Analyzer Span (ppm for NO_x, CO, THCs; % for O_2, CO_2)	Cal Gas Value	Analyzer Response	Calibration Error (% of Span)
Pre-Run 7	NO_x	100	0.00	-0.12	**-0.12**
			25.40	25.09	**-0.31**
			43.90	44.43	**0.53**
			90.83	90.26	**-0.57**
	CO	100	0.00	0.00	**0.00**
			31.80	31.05	**-0.75**
			60.10	59.31	**-0.79**
			91.70	91.04	**-0.66**
	CO_2	20	0.00	0.26	**1.30**
			10.00	9.93	**-0.35**
			18.20	18.21	**0.05**
	O_2	25	0.00	-0.01	**-0.02**
			10.00	10.09	**0.36**
			22.00	22.08	**0.32**
	THCs	100	0.00	1.34	**1.34**
			25.80	24.13	**-1.67**
			50.30	49.93	**-0.37**
			84.30	84.99	**0.69**
Pre-Run 10	NO_x	100	0.00	-0.02	**-0.02**
			25.40	25.48	**0.08**
			43.90	44.87	**0.97**
			90.83	91.84	**1.01**
	CO	1000	0.00	0.10	**0.01**
			302.10	285.10	**-1.70**
			608.30	599.30	**-0.90**
			900.00	900.60	**0.06**
	CO_2	20	0.00	0.03	**0.14**
			10.00	9.98	**-0.13**
			18.20	18.32	**0.58**
	O_2	25	0.00	-0.03	**-0.13**
			10.00	10.11	**0.44**
			22.00	22.16	**0.64**
	THCs	100	0.00	-0.10	**-0.10**
			25.80	23.88	**-1.92**
			50.30	48.65	**-1.65**
			84.30	82.37	**-1.93**

(Continued)

Appendix A-1 (Cont.) - Summary of Emission Analyzer Linearity Tests - April 11, 2001

Run Number	Gas	Analyzer Span (ppm for NO_x, CO, THCs; % for O_2, CO_2)	Cal Gas Value	Analyzer Response	Calibration Error (% of Span)
Pre-Run 1-c	NO_x	100	0.00	-0.03	**-0.03**
			25.40	25.29	**-0.11**
			43.90	45.25	**1.35**
			90.83	90.88	**0.05**
	CO	100	0.00	0.01	**0.01**
			31.80	31.44	**-0.36**
			60.10	59.73	**-0.37**
			91.70	91.48	**-0.22**
	CO_2	20	0.00	0.06	**0.30**
			10.00	9.85	**-0.75**
			18.20	18.14	**-0.30**
	O_2	25	0.00	-0.04	**-0.15**
			10.00	10.05	**0.20**
			22.00	22.05	**0.20**
	THCs	100	0.00	0.90	**0.90**
			25.80	26.40	**0.60**
			50.30	50.62	**0.32**
			84.30	85.94	**1.64**

Appendix A-2. Summary of Reference Method System Error (or Bias where applicable) and Drift Checks (as percent of span)

Analyzer Spans: NO_x = 100 ppm, CO = 100 ppm, THCs = 100 ppm, CO_2 = 20%, O_2 = 25%

Run Number:		Initial Cal	7	8	9	10	11	12	1-c	2-c	3-c	4-c	5-c	6-c
NO_x Zero	System Response	-0.10	0.21	0.21	0.19	0.38	0.23	0.30	0.27	0.26	0.29	0.25	0.23	0.26
	System Error	-0.10	0.21	0.21	0.19	0.38	0.23	0.30	0.27	0.26	0.29	0.25	0.23	0.26
	Drift	NA	0.31	0.00	-0.02	0.19	-0.15	0.07	NA	-0.01	0.03	-0.04	-0.02	0.03
NO_x Mid	System Response	24.73	24.78	24.87	24.71	24.93	24.82	24.95	24.78	24.61	24.49	24.41	24.64	24.86
	System Error	-0.67	-0.62	-0.53	-0.69	-0.47	-0.58	-0.45	-0.62	-0.79	-0.91	-0.99	-0.76	-0.54
	Drift	NA	0.05	0.09	-0.16	0.22	-0.11	0.13	NA	-0.17	-0.12	-0.08	0.23	0.22
CO_2 Zero	System Response	0.07	0.08	0.08	0.07	0.03	0.04	0.00	0.07	0.09	0.03	0.00	0.02	0.02
	System Bias	0.35	0.40	0.40	0.33	0.15	0.20	-0.01	0.35	0.43	0.14	0.02	0.10	0.10
	Drift	NA	0.05	0.00	-0.08	0.00	0.05	-0.21	NA	0.08	-0.29	-0.13	0.09	0.00
CO_2 Mid	System Response	18.09	18.10	18.08	18.08	18.06	18.06	18.03	17.90	17.86	17.85	17.83	17.76	17.85
	System Bias	-0.55	-0.50	-0.60	-0.60	-0.70	-0.70	-0.85	-1.50	-1.70	-1.78	-1.84	-2.20	-1.75
	Drift	NA	0.05	-0.10	0.00	-0.10	0.00	-0.15	NA	-0.20	-0.08	-0.06	-0.36	0.45
O_2 Zero	System Response	-0.01	0.02	0.00	0.00	-0.02	-0.04	-0.04	0.00	-0.03	-0.01	-0.02	-0.03	-0.02
	System Bias	-0.02	0.07	-0.02	0.00	-0.08	-0.16	-0.18	0.01	-0.11	-0.06	-0.08	-0.11	-0.08
	Drift	NA	0.12	-0.11	0.03	-0.11	-0.10	-0.02	NA	-0.15	0.07	-0.03	-0.05	0.04
O_2 Mid	System Response	21.93	21.95	21.93	21.92	21.89	21.88	21.89	21.78	21.74	21.92	21.70	21.73	21.72
	System Bias	-0.28	-0.20	-0.28	-0.32	-0.44	-0.48	-0.44	-0.88	-1.04	-0.32	-1.20	-1.08	-1.12
	Drift	NA	0.10	-0.10	-0.05	-0.15	-0.05	0.05	NA	-0.20	0.90	-1.10	0.15	-0.05
CO Zero	System Response	0.88	0.85	0.95	0.60	1.80	0.90	1.70	0.79	0.71	0.93	0.86	0.78	0.81
	System Bias	0.88	0.85	0.95	0.60	0.18	0.09	0.17	0.79	0.71	0.93	0.86	0.78	0.81
	Drift	NA	-0.03	0.10	-0.35	1.20	-0.90	0.80	NA	-0.08	0.22	-0.07	-0.08	0.03
CO Mid	System Response	31.78	31.76	31.76	31.79	304.70	303.80	302.30	31.89	31.88	31.78	31.68	31.95	32.10
	System Bias	1.68	1.66	1.66	1.69	0.26	0.17	0.02	1.79	1.78	1.68	1.58	1.85	2.00
	Drift	NA	-0.02	0.00	0.03	na	-0.90	-1.50	NA	-0.01	-0.10	-0.10	0.27	0.15
THCs Zero	System Response	-0.97	-0.78	-0.80	-0.87	-1.16	-1.19	-1.10	0.17	0.25	0.19	0.10	-0.11	-0.33
	System Error	-0.97	-0.78	-0.80	-0.87	-1.16	-1.19	-1.10	0.17	0.25	0.19	0.10	-0.11	-0.33
	Drift	NA	0.19	-0.02	-0.07	-0.29	-0.03	0.09	NA	0.08	-0.06	-0.09	-0.21	-0.22
THCs Mid	System Response	23.03	23.20	22.67	22.60	23.91	24.39	23.28	23.89	23.73	24.32	23.65	23.55	23.67
	System Error	-2.77	-2.60	-3.13	-3.20	-1.89	-1.41	-2.52	-1.91	-2.07	-1.48	-2.15	-2.25	-2.13
	Drift	NA	0.17	-0.53	-0.07	1.31	0.48	-1.11	NA	-0.16	0.59	-0.67	-0.10	0.12