VR-P2MF-02-02
Revision 0
September 2002

Environmental Technology Verification Report

Evaluation of Kaselco POSI-FLO Electrocoagulation Treatment Process

Prepared by

CTC Concurrent Technologies Corporation

Under a Cooperative Agreement with

EPA **U.S. Environmental Protection Agency**

ETV ETV ETV

NOTICE

This publication was developed under Cooperative Agreement No. CR826492-01-0 awarded by the U.S. Environmental Protection Agency (EPA). EPA reviewed this document and made comments and suggestions intended to improve the scientific analysis and technical accuracy of the statements contained in the document. Concurrent Technologies Corporation (*CTC*) accommodated EPA's comments and suggestions. However, the views expressed in this document are those of *CTC*; EPA does not endorse any products or commercial services mentioned in this publication. The document will be maintained by *CTC* in accordance with the Environmental Technology Verification Program Metal Finishing Pollution Prevention (P2) Technologies Quality Management Plan. Document control elements include unique issue numbers, document identification, numbered pages, document distribution records, tracking of revisions, a document MASTER filing and retrieval system, and a document archiving system.

Environmental Technology Verification Report

Evaluation of Kaselco POSI-FLO Electrocoagulation Treatment Process

Prepared by

ETV-MF Project Manager
George Cushnie
CAI Resources, Inc.
Oakton, VA 22124

***CTC* Project Manager**
James Totter, CEF
Concurrent Technologies Corporation
Largo, FL 33773

***CTC* ETV-MF Program Manager**
Donn Brown
Concurrent Technologies Corporation
Largo, FL 33773

EPA ETV Pilot Manager
George Moore, Ph.D.
National Risk Management Research Laboratory
Cincinnati, Ohio 45628

FOREWORD

The Environmental Technology Verification (ETV) Program has been established by the EPA to evaluate the performance characteristics of innovative environmental technologies for any media and to report this objective information to the states, local governments, buyers, and users of environmental technology. EPA's Office of Research and Development (ORD) established a five-year pilot program to evaluate alternative operating parameters and to determine the overall feasibility of a technology verification program. ETV began in October 1995 and was evaluated through September 2000. EPA is preparing a report to Congress containing results of the pilot program and recommendations for its future operation.

EPA's ETV Program, through the National Risk Management Research Laboratory (NRMRL), has partnered with *CTC* under the Environmental Technology Verification Program Metal Finishing P2 Technologies (ETV-MF) Pilot. The ETV-MF Pilot, in association with EPA's Metal Finishing Strategic Goals Program, was initiated to identify promising and innovative metal finishing pollution prevention technologies through EPA-supported performance verifications. The following report describes the verification of the performance of the Kaselco POSI-FLO Electrocoagulation Treatment Process.

ACRONYM and ABBREVIATION LIST

amp	Ampere(s)
C	Specific Conductivity
^{o}C	Degrees Celsius
COC	Chain of Custody
CTC	Concurrent Technologies Corporation
CWA	Clean Water Act
DC	Direct Current
EFF	Effluent
EPA	U.S. Environmental Protection Agency
ETV-MF	Environmental Technology Verification Program for Metal Finishing P2 Technologies
ft^2	Square Feet
ft^3	Cubic Feet
gal	Gallon(s)
gpd	Gallons per Day
gpm	Gallons per Minute
HCl	Hydrochloric Acid
HP	Horsepower
hr(s)	Hour(s)
Hz	hertz
IC	Ion Chromatography
ICP-AES	Inductively Coupled Plasma – Atomic Emission Spectroscopy
ID	Identification
IDL	Instrument Detection Limit
IN	Influent
IX	Ion Exchange
kg	Kilogram
kWh	Kilowatt-Hour
L	Liter
lb	Pound
m^3	Cubic Meters
MDL	Method Detection Limit
mg	Milligram
mg/L	Milligram per Liter
min	Minute
mL	Milliliter
MP&M	Metal Products & Machinery
µg	Microgram
µS	Micro-siemens
NA	Not Applicable
NaOH	Sodium Hydroxide
ND	Not Detected
NRMRL	National Risk Management Research Laboratory
O&G	Oil and Grease

ACRONYM and ABBREVIATION LIST (continued)

O&M	Operating and Maintenance
ORD	Office of Research & Development
P	Percent Recovery
P2	Pollution Prevention
PLC	Programmable Logic Controller
QA/QC	Quality Assurance/Quality Control
QMP	Quality Management Plan
RPD	Relative Percent Difference
Rx	Reactor
SP-	Sampling Point
SR	Sample Result
SSR	Spiked Sample Result
TDS	Total Dissolved Solids
TOC	Total Organic Carbon
TSA	Technical System Audit
TSS	Total Suspended Solids
U.S.	United States

ACKNOWLEDGEMENTS

This is to acknowledge Valerie Whitman of *CTC* for her help in preparing this document. *CTC* also acknowledges the support of all those who helped plan and implement the verification activities and prepare this report. In particular, a special thanks to Alva Daniels, EPA National Risk Management Research Laboratory (NRMRL) Assistant Director, and Lauren Drees, EPA Quality Assurance Manager. *CTC* also expresses sincere gratitude to Kaselco, Inc., the manufacturer of the Kaselco POSI-FLO Electrocoagulation Treatment Process System, for their participation in and support of this program. In particular, *CTC* thanks Paul Morkovsky for his assistance. *CTC* also thanks J. Kelly Mowry of Gull Industries for his cooperation during this verification test.

THE ENVIRONMENTAL TECHNOLOGY VERIFICATION PROGRAM

U.S. Environmental Protection Agency

Concurrent Technologies Corporation

ETV VERIFICATION STATEMENT

TECHNOLOGY TYPE:	**ELECTROCOAGULATION**		
APPLICATION:	**METAL FINISHING WASTEWATER**		
TECHNOLOGY NAME:	**Kaselco POSI-FLO Electrocoagulation Treatment System**		
COMPANY:	**Kaspar Electroplating Company**		
POC:	**Paul Morkovsky**		
ADDRESS:	**P.O. Box 667** **Shiner, TX 77984**	**PHONE:** **FAX:**	**(361) 594-3327** **(361) 594-3311**
E-MAIL:	**pmorkovsky@kaselco.com**		

The United States Environmental Protection Agency (EPA) has created the Environmental Technology Verification (ETV) Program to facilitate the deployment of innovative or improved environmental technologies through performance verification and dissemination of information. The goal of the ETV Program is to further environmental protection by substantially accelerating the acceptance and use of improved, cost-effective technologies. ETV seeks to achieve this goal by providing high-quality, peer-reviewed data on technology performance to those involved in the design, distribution, financing, permitting, purchase, and use of environmental technologies.

ETV works in partnership with recognized standards and testing organizations, stakeholder groups consisting of buyers, vendor organizations, and states, with the full participation of individual technology developers. The program evaluates the performance of innovative technologies by developing test plans that are responsive to the needs of stakeholders, conducting field or laboratory tests (as appropriate), collecting and analyzing data, and preparing peer-reviewed reports. All evaluations are conducted in accordance with rigorous quality assurance protocols to ensure that data of known and adequate quality are generated and that the results are defensible.

Concurrent Technologies Corporation operates the ETV Metal Finishing P2 Technologies (ETV-MF) Pilot, one of 12 technology focus areas under the ETV Program, in cooperation with EPA's National Risk Management Research Laboratory. The ETV-MF Pilot has evaluated the performance of a wastewater treatment system for processing of wastewater from metal finishing operations. This verification statement provides a summary of the test results for the Kaselco system.

VERIFICATION TEST DESCRIPTION

The Kaselco Electrocoagulation Treatment System (Kaselco system) in combination with an ion exchange polishing system were tested, under actual production conditions, processing metal finishing wastewater at Gull Industries in Houston, Texas. The verification test evaluated the ability of the combined treatment system to remove regulated contaminants from the wastewater and recover the wastewater for reuse.

Testing was performed during treatment of three batches of wastewater, with each batch approximately equaling the average volume of wastewater generated daily at Gull Industries. Samples were collected of the raw wastewater, intermediate streams, final treated wastewater, and process residuals, including sludge. Chemical usage, electricity usage, and labor data were collected to perform the cost analysis.

TECHNOLOGY DESCRIPTION

The Kaselco system is a series of tanks and associated equipment used to process industrial wastewater containing dissolved metals and organics such as oil. Wastewater is initially processed by electrocoagulation and subsequently passes through de-foam, thickener, and clarification tanks. The unique aspect of the Kaselco system is the electrocoagulation step. Electrocoagulation is a process that uses electricity (direct current) and metal plates to cause metal contaminants in wastewater to become destabilized and precipitate. The current flow causes the steel anode plates to dissolve slowly, thereby releasing ferrous ions into the wastewater. The ferrous iron that is dissolved in the wastewater chemically reacts with the hexavalent chromium and reduces it to the trivalent state. During this reduction process, the iron is converted to trivalent iron hydroxide and other compounds. A co-precipitation effect occurs in which the iron hydroxide adsorbs heavy metal cations (e.g., nickel) onto its surface. Electrolysis gases are separated from the wastewater in the de-foam tank, which is agitated by a mechanical mixer. A polymer is added to improve floc formation as the wastewater exits the de-foam tank. The wastewater is then transferred through a sludge thickener to a conventional clarifier where solids separation takes place. The overflow from the clarifier is discharged to a storage tank. The underflow from the clarifier and thickener are dewatered on a filter press and sent off-site for recovery or disposal.

At Gull Industries, an ion exchange polishing system is used after electrocoagulation to further process the wastewater. The ion exchange polishing system consists of three skid-mounted, ion exchange pressure vessels, with interconnecting piping and control valves. It is also equipped with a PC-based control system. Wastewater exiting the ion exchange system is reused by Gull Industries for rinsing on their electroplating line.

VERIFICATION OF PERFORMANCE

Verification testing was performed November 26-30, 2001. The performance of the Kaselco in combination with an ion exchange system was evaluated with respect to key operating and performance criteria. The results of these analyses are summarized below.

Pollutant Removal Efficiency. Average pollutant concentrations and removal percentages measured during a three-batch operation of the Kaselco and ion exchange systems are shown in **Table i**. Note that the clarifier discharge is not the same as the ion exchange influent due to the fact that a holding tank between the two systems could not be completely discharged. The parameters listed in this table are regulated under current metal finishing effluent standards [Ref. 1] and/or are found in the proposed Metal Products and Machinery (MP&M) rule [Ref. 2]. The Kaselco system effectively removed 98.8 percent or greater of each pollutant found in the influent above detection limits except for total organic carbon (TOC) and manganese. These two parameters are not regulated by metal finishing standards, but are proposed parameters in the MP&M rule. The ion exchange system removed 98.3 percent or greater of each pollutant parameter found in the influent above detection limits.

Parameter	Kaselco System Avg. Results			Ion Exchange System Avg. Results		
	Avg. Raw Wastewater mg/L	Avg. Clarifier Discharge mg/L	% Removal*	Avg. IX Influent mg/L	Avg. IX Effluent mg/L	% Removal*
Sulfide	ND	ND	-	ND	ND	-
O&G (HEM)	ND	ND	-	ND	ND	-
TOC	32.7	21.6	33.9%	19.6	0.3	98.3%
Cadmium	0.002	ND	100%	ND	ND	-
Chromium (T)	69.9	0.2	99.6%	0.28	ND	100%
Chromium +6[1]	30.1	ND	100%	0.09	ND	100%
Copper	2.15	0.02	99.0%	0.05	ND	100%
Lead	1.26	ND	100%	0.02	ND	100%
Manganese	0.29	0.39	NR	0.74	ND	100%
Molybdenum	ND	ND	-	ND	ND	-
Nickel	114.0	1.4	98.8%	5.2	ND	100%
Silver	ND	ND	-	ND	ND	-
Tin	0.150	ND	100%	ND	ND	-
Zinc	2.85	ND	100%	0.12	ND	100%

ND = not detected
*Batches 1&2 Only because of a potential analytical error in batch 3
NR=not reported due to increase in effluent.
*Percent removals are calculated only for pollutants found above detection limits in the raw or influent wastewater. Nondetects in discharges were considered to be zero.

Table i. Averaged Pollutant Concentrations and Removal Percentages

Ability to Meet Metal Finishing and Proposed Target Effluent Levels. The results from each set of analytical data were compared to the applicable metal finishing (40 CFR 433) and proposed MP&M limitations (66 FR 423) to determine if the Kaselco and ion exchange systems achieved these standards. For the Kaselco system, the metal finishing limitations were met for all parameters for each batch of wastewater treated. The Kaselco system also met the proposed MP&M limitations for all parameters with the exception of manganese during treatment of batch 1. The proposed MP&M limit for manganese is 0.25 mg/L; and the Kaselco clarifier discharge for batch 1 contained 0.509 mg/L Mn. For the ion exchange system, the metal finishing limitations and proposed MP&M limitations were met for all parameters for each batch of wastewater treated.

Reusability of Treated Wastewater. The reusability of the treated wastewater as process water was determined by comparing the results of the specific conductance and total dissolved solids (TDS) analytical tests of the ion exchange system effluent to standards used by Gull Industries for water reuse. Treated water meeting these standards was deemed reusable. The Gull Industries standards are:

- Specific conductance: maximum of 500 µS
- TDS: maximum of 250 mg/L

For wastewater batches 1, 2 and 3, the combined Kaselco/ion exchange polishing system met the Gull Industries water reuse criteria. The highest conductance found after treatment was 19.6 µS; the highest TDS level was 56 mg/L. During the period of testing, it was observed that Gull Industries reused the water produced by the combined Kaselco/IX system as rinse water on their electroplating line.

Sludge Generation. Thickener and clarifier underflow from the Kaselco system are dewatered using a filter press. The volume of sludge generated from the filter press after the treatment of 3 batches of wastewater (10,333 L) was 65.4 L (2.31 ft^3). On a flow-normalized basis, the quantity of sludge generated was 6.2 L/1,000 L (0.85 ft^3/1,000 gal). Analytical results show that the sludge had a specific gravity (bulk density) of 1.20. The calculated weight of the sludge was 78.5 kg (172.6 lbs.). On a weight percentage basis, the sludge contained the following percentages of metals: 10.5 percent Fe, 1.5 percent Ni, and 0.5 percent Cr. Other metals were found in lower concentrations.

Additional Pollutant Removal. The additional pollutant removal of the combined Kaselco/ion exchange polishing system installed at Gull Industries was measured by determining the quantity of regulated pollutants removed beyond the level required by the current metal finishing regulations (40 CFR 433). The overall additional pollutant removal from use of the combined Kaselco/ion exchange polishing system was a reduction of 126.5 g of regulated metals for the three batches of wastewater treated during the test. On an annual basis (260 days/year), assuming 3,400 L of wastewater treated per day, the reduction in regulated (current and proposed) metals in wastewater discharged is projected to be 10,822 g/yr.

Energy Use. The power consumption of the Kaselco system is 17.9 kWh/1,000 L (67.9 kWh/1,000 gal.) of wastewater processed. The power consumption of the ion exchange system is 0.67 kWh/1,000 L (2.54 kWh/1,000 gal.) of wastewater processed.

Cost of Operation. The following parameters were considered in the cost analysis: chemical reagents, steel plates, other materials (e.g., filters), electricity, labor, and sludge management. The cost of treatment for the Kaselco system, excluding labor, was $6.06/1,000 L ($22.91/1,000 gal.) and $18.18/1,000 L ($66.85/1,000 gal.), including labor. Labor costs were affected by design of the system tested. The installed system at Gull Industries is a batch system. Kaselco also manufactures automatic, continuous flow systems that would be less labor intensive. The cost of treatment for the ion exchange system, excluding labor, was $2.77/1,000 L ($10.47/1,000 gal.) and $3.91/1,000 L ($14.79/1,000 gal.), including labor.

SUMMARY

The Kaselco system effectively treated electroplating wastewaters containing hexavalent chromium, nickel, and other regulated parameters during the test. Hexavalent chromium reduction was achieved over a wide pH range (2.9 to 6.0), without adjusting the pH or adding reducing reagents, other than the iron contributed by dissolving steel anodes. Further, the electrocoagulation process caused the pH to increase as hexavalent chromium reduction took place, to within a suitable range for metals precipitation. A polymer was added following the electrocoagulation step to congeal precipitated metals.

The discharge from the Kaselco system met the 40 CFR 433 metal finishing standards for all parameters. Because of the Kaselco system's design, iron and manganese are added to the wastewater and subsequently precipitated and removed as sludge along with other parameters. The manganese concentration in the clarifier effluent was above the proposed MP&M limitation for one of the three batches of wastewater treated during the test. With this one exception, the discharge from the Kaselco system met the proposed MP&M standards for all parameters. Thickener and clarifier underflow from the Kaselco system are dewatered using a filter press. The volume of sludge generated from the filter press after the treatment of 3 batches of wastewater (10,333 L) was 65.4 L (2.16 ft^3).

The ion exchange polishing system effectively removed regulated pollutant parameters down to below detection limits. The effluent from the ion exchange system meets the water use criteria at Gull Industries, and it is recycled to the electroplating line.

The combined Kaselco/ion exchange polishing system provides a significant environmental benefit by removing regulated metal parameters well below required limits. On an annual basis, at Gull Industries the benefit would be a reduction of 10,822 g (23.8 lbs) of regulated metals discharged.

Original Signed By:
E. Timothy Oppelt

E. Timothy Oppelt
Director
National Risk Management Research Laboratory
Office of Research and Development
U.S. Environmental Protection Agency

Original Signed By:
Donn W. Brown

Donn W. Brown
Manager
P2 Metal Finishing Technologies Program
Concurrent Technologies Corporation

NOTICE: EPA verifications are based on evaluations of technology performance under specific, predetermined criteria and appropriate quality assurance procedures. EPA and *CTC* make no expressed or implied warranties as to the performance of the technology and do not certify that a technology will always operate as verified. The end user is solely responsible for complying with any and all applicable federal, state, and local requirements. Mention of commercial product names does not imply endorsement.

TABLE OF CONTENTS

1.0 INTRODUCTION 1
2.0 DESCRIPTION TREATMENT SYSTEMS 1
2.1 Electrocoagulation System 1
2.2 Ion Exchange Polishing System 4
2.3 Test Site Installation 6
3.0 METHODS AND PROCEDURES 9
3.1 Test Objectives 9
3.2 Test Procedure 9
3.2.1 System Set-Up 9
3.2.2 Testing 10
3.3 Quality Assurance/Quality Control 10
3.3.1 Data Entry 10
3.3.2 Sample Collection and Handling 11
3.3.3 Calculation of Data Quality Indicators 12
3.3.3.1 Precision 12
3.3.3.2 Accuracy 13
3.3.3.3 Completeness 13
3.3.3.4 Comparability 14
3.3.3.5 Representativeness 14
3.3.3.6 Sensitivity 14
4.0 VERIFICATION DATA 15
4.1 Analytical Results 15
4.2 Process Measurements 20
5.0 EVALUATION OF RESULTS 23
5.1 System Operation 23
5.2 Pollutant Removal Efficiency 26
5.3 Ability to Meet Metal Finishing and Proposed Target Effluent Levels 29
5.4 Reusability of Treated Wastewater 32
5.5 Energy Use 32
5.6 Cost Analysis 33
5.7 Sludge Generation Analysis 34

5.8 Environmental Benefit 35

6.0 REFERENCES 36

LIST OF TABLES

Table 1. Laboratory Methodology Information 15
Table 2. Analytical Results for Batch 1 16
Table 3. Analytical Results for Batch 2 17
Table 4. Analytical Results for Batch 3 18
Table 5. Analytical Results for Sludge and Ion Exchange Regenerant 19
Table 6. Results of Mass Balance Analysis 20
Table 7. Volume of Wastewater Processed, Processing Time and Rectifier Readings 21
Table 8. Unit Cost Data 21
Table 9. Material Consumption Data 22
Table 10. Results of Pollutant Removal Efficiency Analysis for Kaselco System 27
Table 11. Results of Pollutant Removal Analysis for Water Reuse System (Kaselco/IX) 28
Table 12. Results of Regulatory Limits Comparison Analysis for Kaselco System 30
Table 13. Results of Regulatory Limits Comparison Analysis for Ion Exchange System 31
Table 14. Comparison of Analytical Results and Gull Industries Water Recycling Criteria 32
Table 15. Results of Energy Use Analysis 33
Table 16. Results of Cost Analysis 34
Table 17. Characterization of Sludge Generated from Kaselco System 35
Table 18. Results of Environmental Benefit Analysis 35

LIST OF FIGURES

Figure 1. Photograph of the Kaselco System 2
Figure 2. Diagram of the Kaselco System 3
Figure 3. Diagram of the Ion Exchange System 5
Figure 4. Diagram of the Kaselco Installation at Gull Industries 7
Figure 5. Photograph of the Kaselco System Installed at Gull Industries 7
Figure 6. Photograph of the Ion Exchange System Installed at Gull Industries 8
Figure 7. Impact of Individual Unit Operations on Key Parameters 24
Figure 8. Impact of Each Pass Through the Electrocoagulation Reactor 25

1.0 INTRODUCTION

The Environmental Technology Verification (ETV) Program has been established by the EPA to evaluate the performance characteristics of innovative environmental technologies for any media and to report this objective information to the states, local governments, buyers, and users of environmental technology. EPA's Office of Research and Development (ORD) established a five-year pilot program to evaluate alternative operating parameters and to determine the overall feasibility of a technology verification program. ETV began in October 1995 and was evaluated through September 2000. EPA is preparing a report to Congress containing results of the pilot program and recommendations for its future operation.

EPA's ETV Program, through the National Risk Management Research Laboratory (NRMRL), has partnered with *CTC* under the Environmental Technology Verification Program Metal Finishing P2 Technologies (ETV-MF) Pilot. The ETV-MF Pilot, in association with EPA's Metal Finishing Strategic Goals Program, was initiated to identify promising and innovative metal finishing P2 technologies through EPA-supported performance verifications. The following report describes the verification of the performance of the Kaselco POSI-FLO Electrocoagulation Treatment Process.

2.0 DESCRIPTION TREATMENT SYSTEMS

2.1 Electrocoagulation System

The Kaselco electrocoagulation system (**Figure 1**) is a series of tanks and associated equipment used to process industrial wastewater containing dissolved metals and organics such as oil.

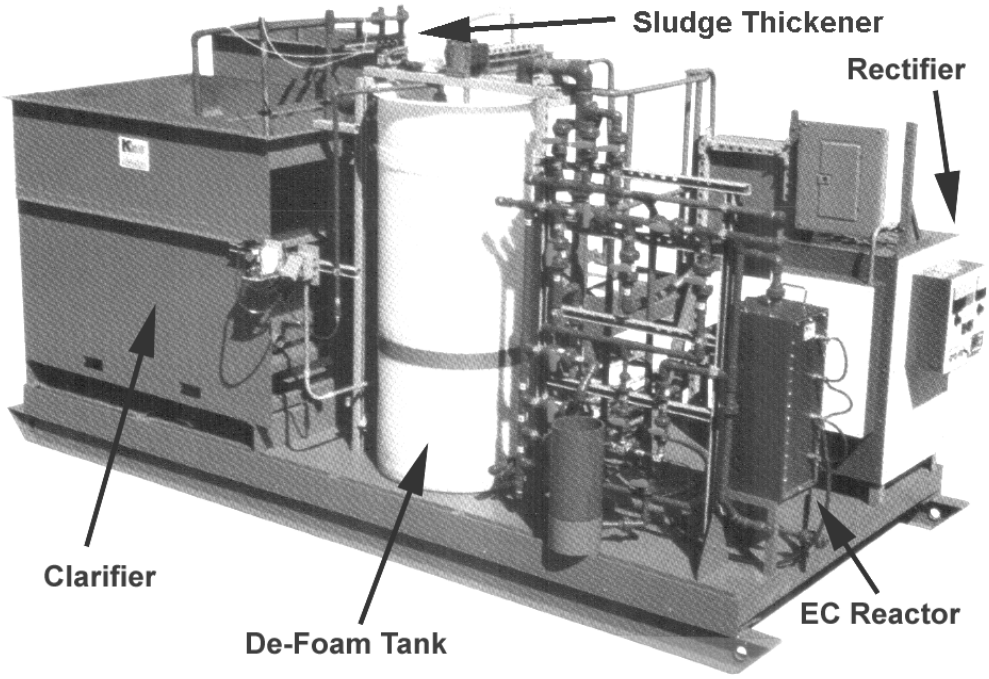

Figure 1. Photograph of the Kaselco System

The unique aspect of the Kaselco system is the electrocoagulation step. Electrocoagulation is a process that uses electricity (direct current) and metal plates to cause metal contaminants in wastewater to become destabilized and precipitate. Several materials such as steel, aluminum, and titanium are available for the reactor plates. Steel plates are used in the Kaselco system that was tested during this verification project. This unit is configured with anode, cathode, and non-polarized steel plates. The plates are stacked in a reactor tank with small gaps separating each plate. Wastewater flows in a serpentine pattern around the plates causing electrical current to flow from plate to plate. The current flow causes the steel anode plates to dissolve slowly, thereby releasing ferrous ions into the wastewater. The polarity of the plates is automatically reversed on a periodic basis. This action maintains a clean steel plate surface and equalizes the corrosion rates of the plates. The ferrous iron that is dissolved in the wastewater chemically reacts with the hexavalent chromium and reduces it to the trivalent state. During this reduction process, there is a rise in pH and the iron is converted to trivalent iron hydroxide and other compounds, which results in a co-precipitation effect, where the iron hydroxide adsorbs heavy metal cations (e.g., nickel) onto its surface.

Conventional wastewater treatment systems reduce hexavalent chromium by lowering the pH to between 2.0 and 3.0 using acid and adding a chemical reagent, such as sodium bisulfate. Subsequently, the pH is increased to above 8.5 using caustic or lime, which precipitates chromium and other metals as hydroxides.

An advantage of the Kaselco system is that it can reduce hexavalent chromium over a wide pH range, without adjusting the pH or adding reducing reagents, other than the iron added by dissolving steel anodes. Further, the electrocoagulation process causes the pH to increase as hexavalent chromium reduction takes place, to within a suitable range for metals precipitation. A polymer is added following the electrocoagulation step to congeal precipitated metals.

Various configurations of the Kaselco system are in use. A diagram of a typical system is shown in **Figure 2**. Wastewater initially flows into the electrocoagulation reactor (Rx). In the system, a direct current (DC) (100 to 120 amps, 0 to 40 volts DC) is applied using an associated rectifier and sacrificial anode plates. The typical residence time in the Rx is 14 seconds. Reactions occur in the Rx, including the reduction of hexavalent chromium to trivalent chromium, the generation of insoluble oxides and hydroxides, and an increase in pH. Single or dual Rx units can be used. Also, single- or multiple-pass systems can be designed. The wastewater flows from the Rx to a de-foam tank, which has a residence time of 30 min. Electrolysis gases are separated from the wastewater in the de-foam tank, which is agitated by a mechanical mixer. A polymer is added to improve floc formation as the wastewater exits the de-foam tank. The wastewater is then transferred through a sludge thickener to a conventional clarifier where solids separation takes place. The overflow from the clarifier is discharged to a storage tank. The underflow from the clarifier goes to a thickener. Thickened sludge is dewatered on a filter press and sent off-site for recovery or disposal.

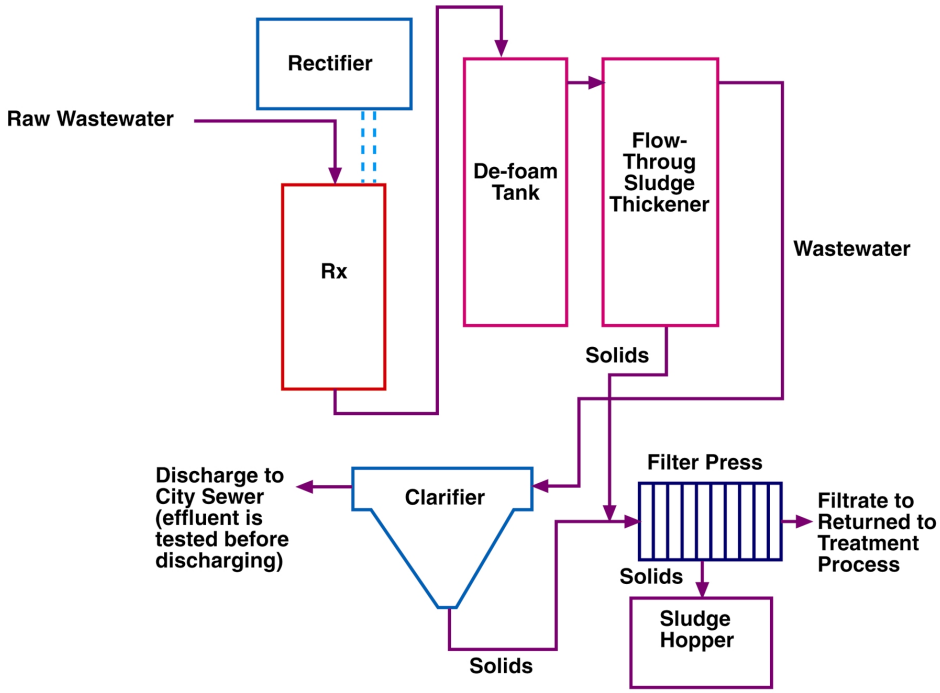

Figure 2. Diagram of the Kaselco System

2.2 Ion Exchange Polishing System

Ion exchange is a chemical reaction wherein an ion from solution is exchanged for a similarly charged ion attached to an immobile solid particle (i.e., ion exchange resin). Ion exchange reactions are stoichiometric (i.e., predictable based on chemical relationships) and reversible. The strategy employed in using this technology is to exchange somewhat harmless ions (e.g., hydrogen and hydroxyl ions), located on the resin, for ions of interest in the solution (e.g., regulated metals). In the most basic sense, ion exchange materials are classified as either cationic or anionic. Cation resins exchange hydrogen ions for positively charged ions such as nickel, copper, and sodium. Anion resins exchange hydroxyl ions for negatively charged ions such as chromates, sulfates, and cyanide [Ref. 3].

Ion exchange resins are usually contained in vessels referred to as columns. The basic column consists of a resin bed with inlet and outlet screens, and service and regeneration flow distributors. Piping and valves are required to direct flow, and instrumentation is required to monitor water quality and control regeneration timing. The systems are operated in cycles consisting of the following four steps:

1. Service (exhaustion) - Water solution containing ions is passed through the ion exchange column or bed until the exchange sites are exhausted.
2. Backwash - The bed is washed (generally with water) in the reverse direction of the service cycle in order to expand and resettle the resin bed.
3. Regeneration - The exchanger is regenerated by passing a dilute solution of the ion originally associated with it (usually a strong mineral acid or base) through the resin bed.
4. Rinse - Excess regenerant is removed from the exchanger, usually by passing water through it.

The ion exchange system consists of three skid-mounted, ion exchange pressure vessels, with interconnecting piping and control valves. It is also equipped with a PC-based control system. A schematic diagram of the ion exchange system is shown in **Figure 3**. The system operates by receiving influent from a tank, via a three-way valve and the suction side of a pump. The water is then discharged from the pump under pressure, and is monitored for pH, specific conductance, pressure, and flow. The resultant analogue signals are sent to the programmable logic controller (PLC) for subsequent processing and display. Each of the analogue signals has two high-level and two low-level alarms. The alarms cause the valve systems to either open or close, which cause a change of direction or stopping of flow. The water is allowed to enter the top of the first vessel containing a cation resin to remove the initial shock loading of heavy metals, whereupon it exits at the bottom of that vessel.

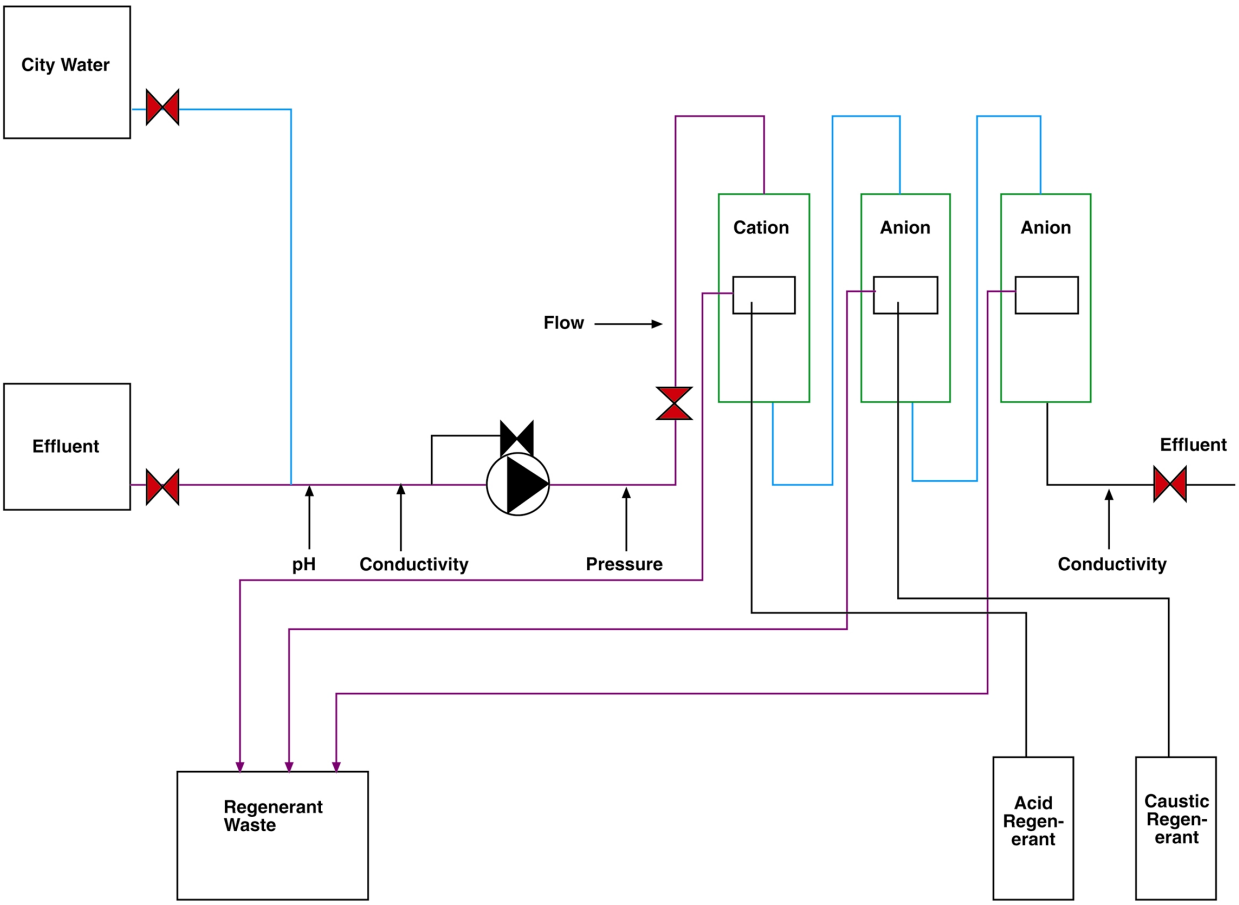

Figure 3. Diagram of the Ion Exchange System

The partially de-ionized water then enters the second and third vessels (anion columns) in the same manner as the first vessel, and there the remaining ionic loading is removed. The resultant discharge from the third vessel is again monitored for pH and specific conductance and can then be reused in the metal finishing process.

The contaminants from the influent (i.e., metal cations such as metals and anions such as hexavalent chromium and nonmetals) will remain in each of the three vessels bonded to each of the special-purpose resins. The water is allowed to flow continuously through the system until such time that the resin is exhausted (i.e., its ability to remove cations and anions from the water is ended). This is determined by the specific conductance of the water exiting the system at the third vessel. At this point, the system will go off line (usually outside production hours) and regenerate itself *in situ*.

The ion exchange regeneration process is carried out automatically. Each vessel will regenerate itself in turn starting with the first vessel. Passing acids and/or bases over the resins, which will remove the captured cations and anions, carries out regeneration of the resin. City water is used as a rinse following regeneration. This regenerant will exit each of the vessels and be captured in the regenerant storage for subsequent processing and

disposal. At this point, the unit will then be ready to go back on line for the processing of influent.

2.3 Test Site Installation

The Kaselco and ion exchange polishing systems were tested at Gull Industries, located in Houston, Texas. Gull Industries is a metal finishing job shop that performs nickel and chromium electroplating, electroless nickel plating, and passivation using nitric acid. The Kaselco system installed at Gull Industries is rated at 38 L/min (10 gpm) and has dual electrocoagulation Rxs piped in series. The ion exchange polishing system installed at Gull Industries is rated at 83 L/min (22 gpm). It has one cation column (1.02 m^3 of resin) and two anion columns (total of 1.13 m^3 of resin).

The majority of wastewater generated at Gull Industries is rinse water and to a lesser extent spent cleaning baths. Approximately 3,400 L (900 gal.) of rinse water is generated on a daily basis at Gull Industries. Used rinse water is stored in a 20,000-L (5,283 gal.) equalization tank prior to treatment. The concentration of regulated metals in the wastewater is typically above 150 mg/L (mostly nickel and chromium).

A diagram of the combined Kaselco/ion exchange systems installed at Gull Industries is shown in **Figure 4**. It consists of electrocoagulation (two Rxs in series), de-foam tank, flow-through sludge thickener, clarifier, filter press, ion exchange system, storage tanks, and associated pumps, piping, and controls. The treatment tanks (i.e., de-foam tank, flow-through sludge thickener, and clarifier) have a total liquid capacity of approximately 3,400 liters.

A photograph of the Kaselco system at Gull Industries is shown in **Figure 5**. The large metal enclosure on the right side of the photograph is the rectifier, and the enclosure on the left side is the electrocoagulation unit.

Wastewater treatment is performed on a batch basis. Each batch consists of approximately 3,400 liters, and the processing rate is 38 L/min (10 gpm). One to two batches are processed each day. During treatment, wastewater is pumped from the 20,000-L equalization tank through the Rx. Wastewater exiting the Rx is diverted to one of two storage tanks. Once the entire batch has been processed, the wastewater in the storage tank is tested using bench-top methods[1]. If the wastewater is insufficiently treated, it is reprocessed through the electrocoagulation system and diverted to a different storage tank, and retested using the bench-top methods. If the wastewater is determined to be sufficiently treated, the wastewater is pumped to the de-foam tank. The wastewater then flows through the sludge thickener and the clarifier and is collected in the intermediate storage tank. From this point, the wastewater is processed through the ion exchange polishing system.

[1] A sample of the wastewater from the storage tank is subjected to a simulated treatment process, performed in a beaker. A small amount of polymer is added to the beaker, which causes precipitated solids in the wastewater to form a dense floc and settle to the bottom of the beaker. The clarified wastewater or "supernatant" is then sampled and tested for nickel and chromium using bench-top analytical procedures.

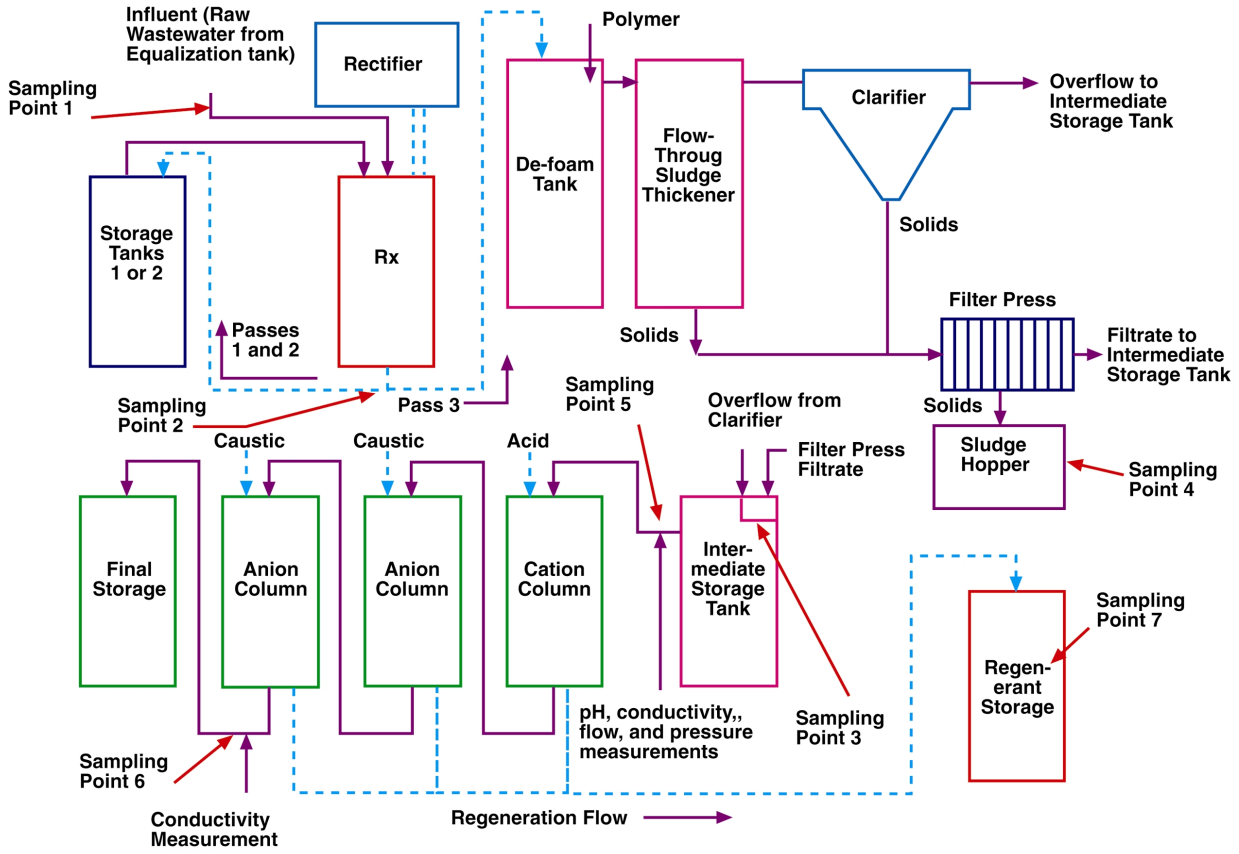

Figure 4. Diagram of the Kaselco Installation at Gull Industries

Figure 5. Photograph of the Kaselco System Installed at Gull Industries

As discussed above, the electrocoagulation process is repeated as necessary until the bench-top methods indicate that the concentration of regulated parameters is sufficiently low. Most frequently, each 3,400-L batch at Gull Industries is processed through the Rx two times.

A photograph of the ion exchange polishing system installed at Gull Industries is shown in **Figure 6.** Treatment is initiated by pumping wastewater from the intermediate storage tank to the ion exchange system. The wastewater passes continuously through one cation and two anion columns. The ion exchange polishing system removes any residual dissolved metals to near or below detection levels and substantially lowers the TDS of the water. The effluent of the ion exchange system is either reused by Gull Industries on their electroplating line as rinse water or discharged under permit to the city sewer. The pH and specific conductance of the wastewater are monitored at various points in the process. The system treats wastewater until the resin is exhausted. The point of exhaustion is determined by the specific conductance of the water exiting the system at vessel number 3. Once the resin is exhausted, the system goes off line (usually outside of production hours) and regenerates itself *in situ*.

Figure 6. Photograph of the Ion Exchange System Installed at Gull Industries

3.0 METHODS AND PROCEDURES

3.1 Test Objectives

The overall goals of this ETV-MF project are: (1) evaluate the ability of the Kaselco and ion exchange polishing systems to remove pollutants from metal finishing job shop wastewaters, with the metal finishing effluent guidelines and proposed MP&M limits used as target effluent concentrations; (2) determine the ability of the combined systems to recover water for reuse in the electroplating process; (3) evaluate the operating characteristics of the systems with respect to sludge and regenerant generation and operating costs; and (4) evaluate the environmental benefit by determining the reduction in metals discharged to the city sewer system.

The following is a summary of primary project objectives. Under normal system operation for the installation at Gull Industries, and processing actual wastewater:

- Determine the ability of the Kaselco and ion exchange polishing systems to remove specific contaminants from waste streams and meet target effluent standards and Gull Industries' criteria for water reuse.
- Determine the quantity and chemical characteristics of the sludge generated by the Kaselco treatment system.
- Determine the cost of operating the Kaselco and ion exchange polishing systems for the specific conditions encountered during testing.
- Quantify the environmental benefit by determining the reduction in metals discharged to the sewer system beyond that required by existing metal finishing standards.

3.2 Test Procedure

3.2.1 System Set-Up

The Kaselco and ion exchange polishing systems tested were the actual systems installed at Gull Industries, where they are used on a daily basis for wastewater treatment. No additional equipment set-up or modification was performed. The entire Kaselco system was drained and cleaned prior to testing, including tanks and the filter press. The ion exchange system was regenerated prior to testing, and regenerant and effluent storage tanks were drained.

At Gull Industries, raw wastewater from the plating lines is collected into a 20,000-L equalization tank. Prior to initiating each test run, the entry of wastewater into the equalization tank was temporarily stopped. This procedure eliminated variability of raw wastewater characteristics during each batch and allowed for grab sampling of the raw wastewater.

3.2.2 Testing

Testing was performed in accordance with the verification test plan [Ref. 4] from November 26 to 30, 2001. During verification testing, the systems were operated by Gull Industries personnel using their standard procedures. Representatives from the Kaselco system and the ion exchange system manufacturer were present to observe testing.

During testing, both the Kaselco system and the ion exchange system were operated in batch modes, which is the normal method of operation at this facility. Each batch of wastewater was initially processed by the Kaselco system, and the treated water was collected in an intermediate storage tank. The ion exchange system then processed the batch of wastewater in the intermediate storage tank and discharged it to a final storage tank. During testing, the Kaselco system processed four batches of wastewater and the ion exchange system processed three batches.

The Kaselco system includes de-foam, thickener, and clarifier tanks that hold 3,400 L of water. This water is hydraulically "pushed" through the system to the intermediate storage tank, by the subsequent batch of treated water. Because the Kaselco system was drained prior to testing, the first batch of treated water filled these three tanks, but no water overflowed to the intermediate storage tank. When the second batch of wastewater was treated and passed through these tanks, this caused 3,400 L of wastewater in the de-foam, thickener, and clarifier to flow into the intermediate storage tank. In effect, the raw wastewater volume from one batch treatment was discharged to the intermediate storage tank during the treatment of the subsequent batch. Some commingling of wastewater batches occurred. However, due to the "plug-flow" design of the system, samples of the raw wastewater from one run were paired with intermediate and final discharge samples of the subsequent run to determine the pollutant removal efficiency of the systems.

3.3 Quality Assurance/Quality Control

A technical system audit (TSA) was performed during verification testing by the *CTC* Quality Assurance (QA) Manager on November 29, 2001, to ensure testing and data collection were performed in accordance with the test plan.

3.3.1 Data Entry

Sampling events, process measurements, and all other data were recorded by the ETV-MF Project Manager on a pre-designed form [Ref 4].

3.3.2 Sample Collection and Handling

Samples were collected from the seven sampling points identified in **Figure 4**. The procedures used at each sampling point are described below.

- **Raw wastewater (sample point 1).** Grab samples of the raw wastewater were be collected from a sampling port 30 minutes (+/- 10 minutes) after initiation of each test run (batch) and placed into the appropriate sample containers.
- **Electrocoagulation reactor discharge (sample point 2).** Grab samples of the electrocoagulation discharge were collected 30 minutes (+/- 10 minutes) after each Rx pass was initiated and placed into the appropriate sample containers and held for hexavalent chromium and other metals analyses. The electrocoagulation discharge contains both water and precipitated solids. Some of these samples were filtered at the analytical laboratory prior to preservation with acid by the analytical laboratory. The filtered samples provided data on the dissolved metal content. Other samples were not filtered and were digested before analysis. These samples were used to show the quantity of iron and manganese added by electrolytic dissolution of the metal anodes.
- **Intermediate treated wastewater (sample point 3).** Treated wastewater is discharged from the clarifier and filter press (filtrate) to an intermediate storage tank. This tank cannot be fully drained due to its design. Therefore, to collect a representative sample of the Kaselco system treated wastewater, it was necessary to intercept the incoming flow before it commingled with the water in the intermediate storage tank. To accomplish this, a five-gal container was hung inside the storage tank, above the water level, to intercept the two discharges. The discharges entered the container and overflowed into the intermediate storage tank. Grab samples for hexavalent chromium, other metals, pH, TDS, specific conductance, oil and grease (O&G), and sulfide were collected 30 minutes (+/- 10 minutes) following initiation of the third or fourth pass. Samples were collected using a ladle to draw treated wastewater from the five-gal container and pour it into the appropriate sample bottles.
- **Wastewater treatment sludge (sample point 4).** After completion of the test runs, the solids in the filter press were discharged to the sludge hopper. Grab samples of the sludge were collected from the sludge hopper at five separate points using a clean spatula, after first completely mixing the material. The sludge sample was placed into a one-L, wide mouth glass jar and mixed again.
- **Ion exchange system influent (sample point 5).** Grab samples of influent to the ion exchange polishing system were collected from a discharge line for hexavalent chromium, other metals, pH, TDS, and specific conductance analyses. The samples were collected 10 minutes (+/- five minutes) after initiation of the ion exchange treatment cycle.[2]

[2] The ion exchange influent is essentially the same wastewater as the Kaselco clarifier effluent (sample point 3). However, it was necessary to collect the ion exchange influent sample because the clarifier discharge was stored in

- **Final treated wastewater (sample point 6).** Grab samples of treated wastewater from the ion exchange polishing system were collected from a sampling port. Grab samples were collected 20 minutes (+/- five minutes) after initiation of the ion exchange treatment process for hexavalent chromium, other metals, pH, TDS, specific conductance, O&G, and sulfide analyses.
- **Ion exchange system regenerant (sample point 7).** The ion exchange polishing system is regenerated approximately every 20 operating days. The regenerant is collected in a storage tank. A Gull Industries employee, who was trained by the ETV-MF Project Manager, took grab samples of the regenerate from the storage tank for metals analyses.

At the time of sampling, each sample container was labeled with the date, time, and sample identification (ID) number. Samples were temporarily stored on-site in coolers containing ice. The ETV-MF Project Manager transported samples to a local laboratory for analysis. A chain of custody (COC) form accompanied the samples. The COC form provided the following information: project name, project address, sampler's name, sample numbers, date/time samples were collected, matrix, required analyses, and appropriate COC signatures.

3.3.3 Calculation of Data Quality Indicators

Data reduction, validation, and reporting were conducted according to the verification test plan [Ref. 4] and the ETV-MF Quality Management Plan (QMP) [Ref. 5]. Calculations of data quality indicators are discussed in this section. The raw data is available upon request.

3.3.3.1 Precision

Precision is a measure of the agreement or repeatability of a set of replicate results obtained from duplicate analyses made under identical conditions. Precision is estimated from analytical data and cannot be measured directly. To satisfy the precision objectives, the replicate analyses must agree within defined percent deviation limits, expressed as a percentage, calculated as follows:

$$RPD = \{(|X_1 - X_2|) / ((X_1 + X_2) / 2)\} \text{ x } 100\% = \left\{ \frac{|X_1 - X_2|}{\frac{(X_1 + X_2)}{2}} \right\} \text{x} 100\%$$

the intermediate storage tank prior to ion exchange treatment. Because of the design of the intermediate storage tank, it could not be fully drained and cleaned. The contamination in the storage tank caused a measurable difference between the clarifier effluent and ion exchange influent.

where:

X_1 = larger of the two observed values
X_2 = smaller of the two observed values

The analytical laboratories performed a total of 102 precision evaluations on test samples. 94 percent of the precision evaluation met each analyte's precision limits.

3.3.3.2 Accuracy

Accuracy is a measure of the agreement between an experimental determination and the true value of the parameter being measured. Analyses with spiked samples were performed to determine percent recoveries as a means of checking method accuracy. The percent recovery (P), expressed as a percentage, is calculated as follows:

$$P = [(SSR - SR)/SA] \times 100\ \%$$

where:

SSR = spiked sample result
SR = sample result (native)
SA = the concentration added to the spiked sample

QA objectives are satisfied for accuracy if the average recovery is within the range identified in Table 10 of the verification test plan [Ref. 4]. The analytical laboratories performed 32 accuracy evaluations. There were 31 samples or 97 percent that were within the limits.

3.3.3.3 Completeness

Completeness is defined as the percentage of measurements judged to be valid (met precision, accuracy, and representativeness) compared to the total number of measurements made for a specific sample matrix and analysis. Completeness, expressed as a percentage, is calculated using the following formula:

$$\text{Completeness} = \frac{\text{Valid Measurements}}{\text{Total Measurements}} \times 100\%$$

QA objectives are satisfied if the percent completeness is 90 percent or greater. There were 134 total measurements, and 127 of them were valid. Raw data is available upon request. This gives 94.8 percent completeness. Therefore, the total completeness objective was satisfied.

3.3.3.4 Comparability

Comparability is a qualitative measure designed to express the confidence with which one data set may be compared to another. Sample collection and handling techniques, sample matrix type, and analytical method all affect comparability. Comparability was achieved during this verification test by the use of consistent methods during sampling and analysis and traceability of standards to a reliable source.

3.3.3.5 Representativeness

Representativeness refers to the degree to which the data accurately and precisely represent the conditions or characteristics of the parameter. For this verification project, 86 duplicate samples were collected in the field and sent to the laboratory for analysis. Of these, 81 met relative percent difference goals. Therefore, representativeness goals were met.

3.3.3.6 Sensitivity

Sensitivity is the measure of the concentration at which an analytical method can positively identify and report analytical results. The sensitivity of a given method is commonly referred to as the detection limit. Although there is no single definition of this term, the following terms and definitions of detection were used for this project.

Instrument Detection Limit (IDL) is the minimum concentration that can be differentiated from instrument background noise; that is, the minimum concentration detectable by the measuring instrument.

Method Detection Limit (MDL) is a statistically determined concentration. It is the minimum concentration of an analyte that can be measured and reported with 99 percent confidence that the analyte concentration is greater than zero, as determined in the same or a similar sample matrix. In other words, this is the lowest concentration that can be reported with confidence. The MDL for the metal sludge sample varies for each individual metal analyte and sludge sample. This is due to the percent moisture in the sludge and is calculated as follows:

Sludge MDL = Standard MDL x (100 percent Solids) x Dilution Factor

The MDLs for this verification project are shown in **Table 1**.

Critical Measurements	Matrix	Method	Reporting Units	Method of Determination	MDL
O&G	Water	SM 5520B	mg/L	Gravimetric	1.0
Total Metal	Water	EPA 200.7	mg/L	ICP-AES	0.04 – 0.005
Total Metal	Solids	SW846 3050B/6010B	µg/g	ICP-AES	0.4 – 0.010
TSS	Water	EPA 160.2	mg/L	Gravimetric	1.0

*MRL – depends on the individual analyte

Table 1. Laboratory Methodology Information

4.0 VERIFICATION DATA

4.1 Analytical Results

Tables 2 to **4** present the analytical results for wastewater samples collected during treatment of batches 1 to 3. Shown are the results for the raw wastewater (sample point 1), Rx effluent (sample point 2), clarifier discharge (sample point 3), ion exchange influent (sample point 5), and ion exchange effluent (sample point 6). **Table 5** contains the analytical results for the filter press sludge (sample point 4) and ion exchange regenerant (sample point 7).[3]

[3] The ion exchange regenerant analytical results are for a sample collected from an ion exchange cycle conducted from 2/2/02 to 3/1/02 instead of the cycle associated with this ETV test. This was necessary because the regenerant for the actual cycle was inadvertently treated on-site and discharged before a sample could be collected.

		Rx Discharge (filtered)				Rx Discharge (digested)						
Parameter	**Raw**	**Pass 1***	**Pass 2**	**Pass 3**	**Pass 4**	**Pass 1***	**Pass 2**	**Pass 3**	**Pass 4**	**Clarifier Discharge**	**IX Influent**	**IX Effluent**
Cadmium, mg/L	0.007	-	ND	ND	ND	ND	ND	ND	-	ND	ND	ND
Chromium (T), mg/L	30.3	-	ND	ND	ND	28.6	43.3	1.13	-	0.116	0.356	ND
Chromium +6, mg/L	26.4	ND	ND	ND	ND	-	-	-	-	ND	0.141	ND
Copper, mg/L	2.45	-	0.489	ND	ND	2.46	3.71	0.237	-	0.017	0.129	ND
Iron, mg/L	3.66	-	12.0	ND	ND	279	900	254	-	5.90	1.89	ND
Lead, mg/L	2.28	-	ND	ND	ND	2.27	3.51	0.072	-	ND	0.046	ND
Manganese, mg/L	0.039	-	6.93	ND	5.46	2.92	7.04	3.24	-	0.509	1.40	ND
Molybdenum, mg/L	ND	-	ND	ND	ND	ND	0.022	ND	-	ND	ND	ND
Nickel, mg/L	115	-	108	0.036	5.92	119	147	8.71	-	1.46	10.5	ND
Silver, mg/L	ND	-	ND	ND	ND	ND	ND	ND	-	ND	ND	ND
Tin, mg/L	0.175	-	ND	ND	ND	0.17	0.287	ND	-	ND	ND	ND
Zinc, mg/L	2.78	-	2.42	ND	0.032	2.75	3.56	0.174	-	ND	0.288	ND
Specific Conductance, µS	2190	-	-	-	-	-	-	-	-	1580	1690	19.6
Lab pH	2.69	5.32	5.47	9.20	-	-	-	-	-	9.03	8.75	-
Field pH	2.9	-	5.9	8.4	7.3	-	-	-	-	8.5	8.3	-
TDS, mg/L	992	943	-	-	-	-	-	-	-	909	963	<10
TSS, mg/L	ND	-	-	-	-	-	-	-	-	17	19	ND
Sulfide, mg/L	ND	-	-	-	-	-	-	-	-	ND	ND	ND
TOC, mg/L	45.4	-	-	-	-	-	-	-	-	23	19.6	ND
O&G, mg/L	ND	-	-	-	-	-	-	-	-	ND	ND	ND

*Insufficient sample volume to perform complete analysis.
ND indicates not detected.
"-" indicates no analytical result for that parameter.

Table 2. Analytical Results for Batch 1

		Rx Discharge (filtered)			Rx Discharge (digested)					
Parameter	**Raw**	**Pass 1**	**Pass 2**	**Pass 3**	**Pass 1**	**Pass 2**	**Pass 3***	**Clarifier Discharge**	**IX Influent**	**IX Effluent**
Cadmium, mg/L	ND	ND	ND	ND	ND	ND	-	ND	ND	ND
Chromium (T), mg/L	32.4	ND	ND	ND	31.6	1.34	-	0.116	0.256	ND
Chromium +6, mg/L	33.7	ND	ND	ND	-	-	-	ND	0.063	ND
Copper, mg/L	0.955	0.012	0.012	ND	1.26	0.384	-	0.017	0.020	ND
Iron, mg/L	ND	ND	ND	ND	153	182	-	5.90	2.00	ND
Lead, mg/L	0.320	ND	ND	ND	0.284	0.018	-	ND	ND	ND
Manganese, mg/L	0.030	1.33	1.07	ND	1.52	2.33	-	0.509	0.495	ND
Molybdenum, mg/Ll	ND	ND	ND	ND	ND	ND	-	ND	ND	ND
Nickel, mg/L	104	48.6	3.60	0.027	102	7.28	-	1.46	3.34	ND
Silver, mg/L	ND	ND	ND	ND	ND	ND	-	ND	ND	ND
Tin, mg/L	0.086	ND	ND	ND	0.077	ND	-	ND	ND	ND
Zinc, mg/L	2.25	0.392	0.036	ND	2.16	0.137	-	ND	0.059	ND
Specific Conductance, µS	1410	-	-	-	-	-	-	1580	1600	8.3
Lab pH	6.61	6.76	6.45	8.37	-	-	-	9.03	8.93	-
Field pH	6.0	6.1	6.9	8.0	-	-	-	8.5	8.2	-
TDS, mg/L	968	-	-	-	-	-	-	909	1150	62
TSS, mg/L	16	-	-	-	-	-	-	17	12	ND
Sulfide, mg/L	ND	-	-	-	-	-	-	ND	ND	ND
TOC, mg/L	24.4	-	-	-	-	-	-	23.0	19.1	ND
O&G, mg/L	ND	-	-	-	-	-	-		ND	ND

* No analysis of sample performed.
"-" indicates no analytical result for that parameter.
ND indicates not detected.

Table 3. Analytical Results for Batch 2

		Rx Discharge (filtered)					
Parameter	**Raw**	**Pass 1**	**Pass 2**	**Pass 3**	**Clarifier Discharge**	**IX Influent**	**IX Effluent**
Cadmium, mg/L	ND	ND	ND	ND	ND	ND	ND
Chromium (T), mg/L	147	54.8	2.67	ND	0.449	0.232	ND
Chromium +6, mg/L	0.247	65.7	7.7	ND	ND	0.069	ND
Copper, mg/L	3.05	ND	ND	ND	0.019	ND	ND
Iron, mg/L	72.7	ND	ND	ND	4.51	0.873	ND
Lead, mg/L	1.19	0.012	ND	ND	ND	ND	ND
Manganese, mg/L	0.79	1.12	1.05	ND	0.163	0.338	ND
Molybdenum, mg/L	ND	ND	ND	ND	ND	ND	ND
Nickel, mg/L	123	76.3	20.1	0.031	1.14	1.64	ND
Silver, mg/L	ND	ND	ND	ND	ND	ND	ND
Tin, mg/L	0.19	ND	ND	ND	ND	ND	ND
Zinc, mg/L	3.53	0.639	0.068	ND	ND	ND	ND
Specific Conductance, µS	1520	-	-	-	1480	1450	8.3
Lab pH	3.66	6.72	7.60	4.88	9.10	8.41	-
Field pH	3.2	6.4	8.4	6.0	8.4	7.9	-
TDS, mg/L	1110	-	-	-	1110	1100	56
TSS, mg/L	57	-	-	-	34	11	ND
Sulfide, mg/L	ND	-	-	-	ND	ND	ND
TOC, mg/L	28.4	-	-	-	18.8	20.2	1.01
O&G, mg/L	ND	-	-	-	ND	ND	ND

All samples were inadvertently filtered by the laboratory prior to analysis, therefore no digested results are available.
"-" indicates no analytical result for that parameter.
ND indicates not detected.

Table 4. Analytical Results for Batch 3

Parameter	Concentration of Parameter in Sludge, mg/kg	Mass of Parameter in Sludge, g*	Concentration of Parameter in IX Regenerant, mg/L	Mass of Parameter in IX Regenerant, g**
Cadmium	ND	-	ND	-
Chromium (T)	5,230	329.5	5,780	39.17
Chromium (+6)	-	-	6,040	41.2
Copper	444	28.0	30.7	0.2
Iron	105,000	6,615	-	-
Lead	256	16.1	ND	-
Manganese	836	52.7	ND	-
Molybdenum	4.52	0.3	ND	-
Nickel	14,500	913.5	30,400	207.1
Silver	ND	-	-	-
Tin	33.9	2.13	ND	-
Zinc	396	24.9	100	0.7
Specific gravity	1.2	-	-	-

*Based on 78.5 kg of sludge generated.
**Based on 6,813 L (1,800 gal.) of regenerant generated.
"-" indicates no analytical result for that parameter.
ND indicates not detected.

Table 5. Analytical Results for Sludge and Ion Exchange Regenerant

Mass balance calculations were performed for chromium (T) and nickel, which are the two metal parameters of greatest significance at Gull Industries. The mass balance was performed only for the Kaselco system since the ion exchange system was not tested over a full cycle. The mass balance results are used as an indicator of the accuracy of the verification test. The mass balance criterion is satisfied when the mass balance is within the range of 75 percent to 125 percent. The equation for the chromium mass balance is shown below. The nickel mass balance equation is similar.

$$\text{mass bal. (\%)} = [((C_E \times V_E) + (C_S \times V_S)) / (C_I \times V_I)] \times 100\%$$

where:
C_E = intermediate treated wastewater chromium concentration (mg/L)
V_E = intermediate treated wastewater volume processed during the test period (L)
C_S = filter press sludge chromium concentration (mg/L)
V_S = filter press sludge volume generated during the test period (L)
C_I = raw wastewater chromium concentration (mg/L)
V_I = raw wastewater volume processed during the test period (L)

The mass balance is based on treatment of batches 1 to 3. A fourth batch of wastewater was processed in order to hydraulically "push" the third batch out of the treatment tanks. Some solids from treatment of the fourth batch may have contributed to the sludge quantity. However, the contribution from the fourth batch is considered negligible, and it is not included in the mass balance calculation. The results of the mass balance analysis are shown in **Table 6**.

Parameter	Raw Wastewater, g	Clarifier Discharge, g	Sludge, g	Clarifier Discharge + Sludge, g	Mass Balance, %
Chromium (T), batches 1 to 3	717.9	2.3	329.5	331.8	46.2%
Chromium (T), batches 1 and 2 only	323.9	2.3	329.5	331.8	102.4%
Nickel	1178.2	14.0	913.5	927.5	78.7%

Table 6. Results of Mass Balance Analysis

The mass balance result for chromium may indicate an analytical error with regard to the chromium concentration of the raw wastewater sample (sample point 1) for batch 3. The chromium concentration of that sample was 4.5 times higher than the chromium concentration found in the raw wastewaters for batches 1 and 2. Due to the dampening effect of the large raw wastewater storage vessel (18,925 L), it is unlikely that variability of this magnitude would occur over such a short time period (one day). Also, no unusual conditions were observed in the plating operations that would cause variability. Therefore, the mass balance for chromium was calculated based on the raw wastewater results for batches 1, 2 and 3 and a second time using only the results from batches 1 and 2. When using the results for batches 1, 2 and 3, the mass balance is 46.2 percent, which is well below the criterion range. However, if the chromium raw wastewater concentration is calculated using data only from batches 1 and 2, the mass balance for chromium is 102.4, which is within the criterion range.

The result of the mass balance analysis for nickel is 78.7 percent, which is within the mass balance criterion range.

4.2 Process Measurements

Certain process measurements were taken during verification testing. Also, some facility data such as cost information were collected. These data are summarized in **Tables 7** to **9**.

Table 7 shows the volume of wastewater processed, approximate processing time, and amp-hour readings for each rectifier taken at the start and end of each pass for batches 1 to 4. Also shown are total processing time and amp-hours for each batch.

			Ammeter A			Ammeter B			
Batch/Pass	**Volume Processed, gal**	**Process Time, min**	**Amp-Hr Reading at Start**	**Amp-Hr Reading at End of Pass**	**Total Amp-Hrs. A**	**Amp-Hr Reading at Start**	**Amp-Hr Reading at End of Pass**	**Total Amp-Hrs. B**	**Total Amp-Hrs. Sum A & B**
Batch 1/Pass 1	930	86	31800.4	31950.4	150.0	33797.0	33976.6	179.6	329.6
Batch 1/Pass 2	930	92	31950.4	32140.0	189.6	33976.6	34230.8	254.2	443.8
Batch 1/Pass 3	930	75	32140.0	32304.5	164.5	34230.8	34344.0	113.2	277.7
Batch 1/Pass 4	930	105	32304.5	32384.4	79.9	34344.0	34432.3	88.3	168.2
Subtotals Batch 1		*358*			*584.0*			*635.3*	*1219.3*
Batch 2/Pass 1	900	68	32384.4	32529.1	144.7	34432.3	34557.0	124.7	269.4
Batch 2/Pass 2	900	72	32529.1	32705.0	175.9	34557.0	34717.5	160.5	336.4
Batch 2/Pass 3	900	120	32705.0	32862.6	157.6	34717.5	34867.6	150.1	307.7
Subtotals Batch 2		*260*			*478.2*			*435.3*	*913.5*
Batch 3/Pass 1	900	81	32862.6	33054.3	191.7	34867.6	35019.9	152.3	344.0
Batch 3/Pass 2	900	95	33054.3	33248.9	194.6	35019.9	35171.6	151.7	346.3
Batch 3/Pass 3	900	120	33248.9	33509.8	260.9	35171.6	35342.3	170.7	431.6
Subtotals Batch 3		*296*			*647.2*			*474.7*	*1121.9*
Batch 4/Pass 1	900	85	33509.8	33723.1	213.3	35342.3	35519.0	176.7	390.0
Batch 4/Pass 2	900	81	33723.1	33920.7	197.6	35519.0	35688.4	169.4	367.0
Batch 4/Pass 3	900	105	33920.7	34154.8	234.1	35688.4	35881.6	193.2	427.3
Batch 4/Pass 4	900	90	34154.8	34415.1	260.3	35881.6	36124.4	242.8	503.1
Subtotals Batch 4		*361*			*905.3*			*782.1*	*1687.4*
Totals Batches 1-4		1275			2614.7			2327.4	4942.1

Table 7. Volume of Wastewater Processed, Processing Time and Rectifier Readings

Unit cost data for labor, electricity, sludge disposal, Rx steel plate replacement, and Kaselco/ion exchange system chemicals are shown in **Table 8**. Gull Industries provided this information.

Parameter	Cost
Treatment System Labor	$20/hr. (loaded rate, includes overhead and fringe benefits)
Electricity	$0.10/kWh
Water/Sewer	$6.50/1,000 gal.
Sludge Disposal	$0.50/lb
Steel Plates	$140.00/set
Polymer	$14.00/gal (concentrated), (for working strength polymer is diluted, 1 part polymer:440 parts water)
Hydrochloric Acid	$0.28/L
Sodium Hydroxide	$0.38/ L

Table 8. Unit Cost Data

Chemical usage and steel plate usage (consumption) during the ETV test are shown in **Table 16.**
.

Parameter	Batch 1			Batch 2			Batch 3			Avg. for Three Batches, % Removal
	Raw Batch 1 mg/L	Clarifier Discharge Batch 1 mg/L	% Removal Batch 1	Raw Batch 2 mg/L	Clarifier Discharge Batch 2 mg/L	% Removal Batch 2	Raw Batch 3 mg/L	Clarifier Discharge Batch 3 mg/L	% Removal Batch 3	
Sulfide	ND	ND	-	ND	ND	-	ND	ND	-	-
O&G (HEM)	ND	ND	-	ND	ND	-	ND	ND	-	-
TOC	45.4	23	49.3%	24.4	23.0	5.7%	28.4	18.8	33.8%	29.6%
Cadmium	0.007	ND	100.0%	ND	ND	-	ND	ND	-	100.0%
Chromium (+6)	26.4	ND	100.0%	33.7	ND	100.0%	33.7	ND	100.0%	100.0%
Chromium (T)	30.3	0.116	99.6%	32.4	0.116	99.6%	147	0.449	99.7%	99.6%
Copper	2.45	0.017	99.3%	0.955	0.017	98.2%	3.05	0.019	99.4%	99.0%
Iron*	3.66	5.9	NR	ND	5.9	< 0%	72.7	4.51	93.8%	78.7%
Lead	2.28	ND	100.0%	0.320	ND	100.0%	1.19	ND	100.0%	100.0%
Manganese	0.039	0.509	NR	0.030	0.509	NR	0.79	0.163	79.4%	NR
Molybdenum	ND	ND	-	ND	ND	-	ND	ND	-	-
Nickel	115	1.46	98.7%	104	1.46	98.6%	123	1.14	99.1%	98.8%
Silver	ND	ND	-	ND	ND	-	ND	ND	-	-
Tin	0.175	ND	100.0%	0.086	ND	100.0%	0.19	ND	100.0%	100.0%
Zinc	2.78	ND	100.0%	2.25	ND	100.0%	3.53	ND	100.0%	100.0%

*Iron is a non-regulated parameter. The average percent removal rate for iron was calculated using average raw and treated concentrations for the three batches.
Average percent removal for three batches calculated using average raw and clarifier values for the three batches (not shown).
"-" indicates no analytical result for that parameter.
ND indicates not detected.
NR = not reported due to increase in effluent

Table 9. Material Consumption Data

The ETV-MF Project Manager made observations during the course of the verification test. Each batch of wastewater was processed at a rate of 38 L/min (10 gpm) through the electrocoagulation unit. Each pass took approximately 90 minutes to complete. The amount of labor required to operate the Kaselco unit was difficult to measure because of the operating mode used at Gull Industries. For each pass, the operator initiated treatment, collected samples and checked pH of the treated wastewater, made adjustments to valves, and made periodic checks on the progress of the treatment cycle. These operations took an average of 0.5 hours per pass. Ten passes were completed during processing batches 1 to 3. At the end of the test, the operator discharged sludge from the filter press and cleaned the plates. This process took 1.0 hour. Therefore, the total number of labor hours was 6.0 hours.

The labor required to operate the ion exchange system was for starting and stopping the system and periodically checking on its progress. The average labor needed per batch was 0.17 hours. At the completion of the ion exchange cycle, the system was regenerated. The regeneration process took seven hours to complete, although it was mostly performed automatically and unattended. The labor required for regeneration was 1.5 hours (not including treatment of regenerant), which was needed for initiating the regeneration cycle and periodically checking on the progress of regeneration.

5.0 EVALUATION OF RESULTS

5.1 System Operation

Analytical results for batches 1 to 3 are displayed in **Figure 7** to show the impact of individual unit operations on several key parameters: nickel, chromium, total chromium, pH, conductivity, and TDS. Additional details for each individual pass through the electrocoagulation unit (Rx) are shown in **Figure 8**. The metals results shown in **Figure 8** are for filtered samples, except for the raw wastewater, which is digested.

The primary metal contaminants in the raw wastewater are chromium (26.4 mg/L to 33.7 mg/L) and nickel (104 mg/L to 115 mg/L). The majority of chromium is in the hexavalent state (87 to 100 percent). The pH of the raw wastewater ranged from 2.9 to 6.0.

The data in **Tables 2** to **4** show that the Kaselco electrocoagulation unit increases the iron concentration (see digested Rx results, sample point 2) and causes an increase in pH. The iron is contributed to the wastewater by electrolytic dissolution of the steel anodes. The median concentration of iron added to the wastewater during the first pass for batches 1 to 3 was 254 mg/L.[4] This value compares closely with historical data from Gull industries, which show that the Rx unit adds an average of 217 mg/L Fe[5] to the wastewater. Operators reported that they typically process each batch of wastewater for

[4] This conclusion is based on analyses of digested samples from sample point 2. These results can be found **Tables 2** to **4**.
[5] Based on a steel electrode weight difference of 147.6 kg after treating 179,816 L of wastewater between 5/13/00 and 10/23/00 at Gull Industries.

one to two passes. The data appear to indicate that subsequent passes (passes 2, 3, and 4) through the Rx do not significantly increase the iron concentration. With the exception of the sample taken during the second pass of the first batch, the iron analyses of the digested sample are fairly constant.[6] However, it was observed that some precipitated solids remained in the intermediate storage tanks after the liquid in the tank was pumped through the Rx for another pass. These solids may have contained some iron that would not have been collected by sampling at sample point 2. The filter press sludge contained 6,615 mg/kg of iron (see **Table 5**). If this quantity of iron is dissolved into the wastewater volume treated during batches 1 to 3, it would produce a concentration of 640 mg/L Fe. This indicates that iron dissolves at approximately an equal rate during each pass, contributing over 200 mg/L per pass.

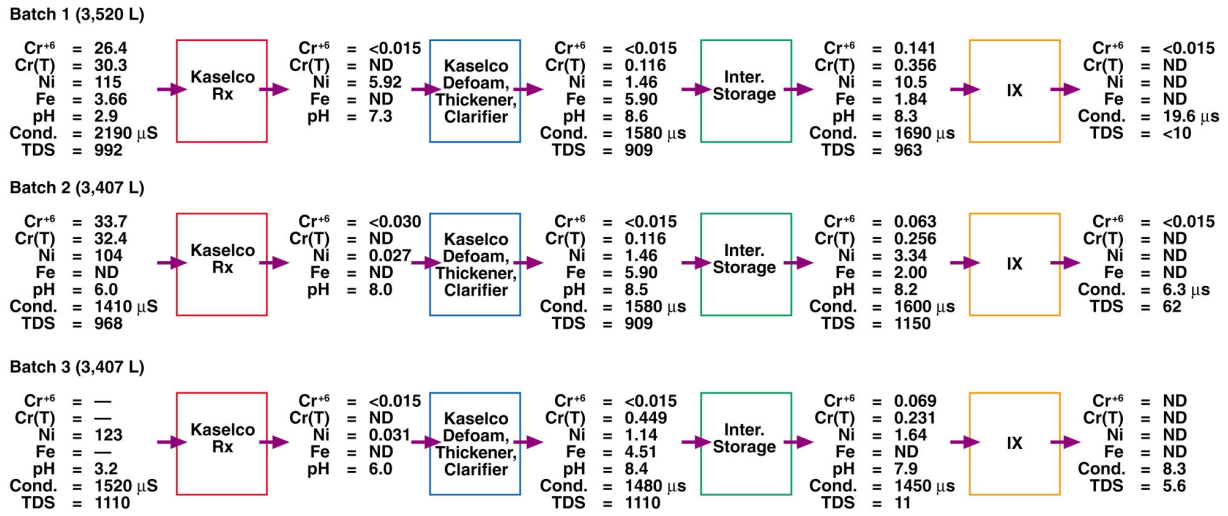

ND = not detected
"-" = no data

Figure 7. Impact of Individual Unit Operations on Key Parameters

[6] The digested sample collected during the second pass of batch 1 had an iron concentration of 900 mg/l. Since no other Rx samples had an iron concentration of this magnitude, it was concluded that the result was unrepresentative. The Rx effluent contains both liquid and solids. It is likely that a larger than representative quantity of solids were collected for this sample.

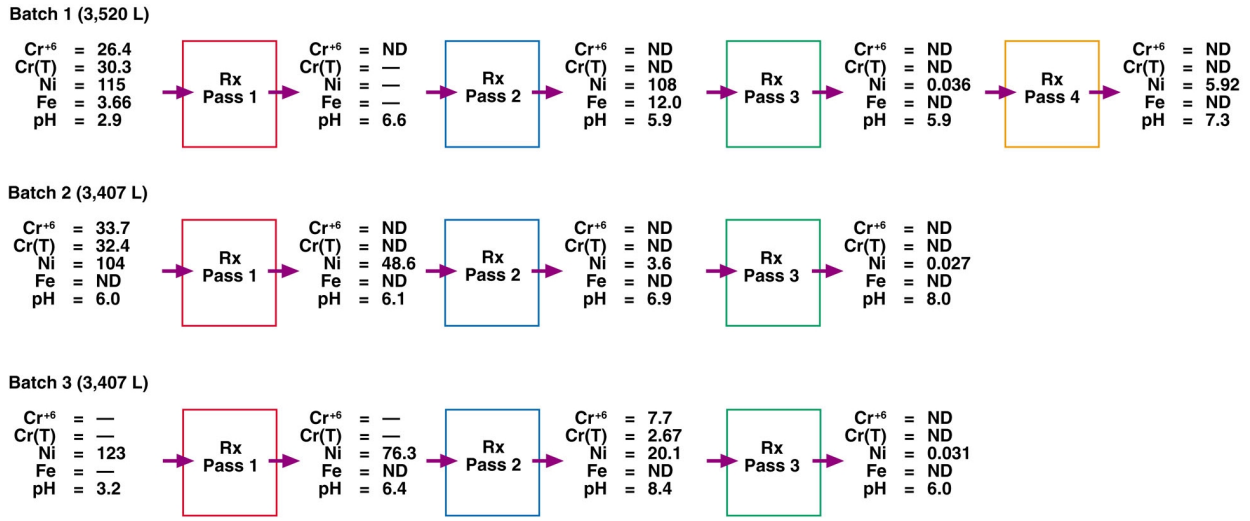

ND = not detected
"-" = no data

Figure 8. Impact of Each Pass Through the Electrocoagulation Reactor

The iron and the metals present in the raw wastewater are partially precipitated during the first pass and fully or nearly fully precipitated by subsequent passes through Rx. The most abundant regulated metal, nickel, was reduced in concentration in the filtered samples from an average of 114 mg/L to 0.03 mg/L after three passes. During batch 1, the nickel concentration increased from 0.036 mg/L after pass 3 to 5.92 mg/L after pass 4. The reason for this increase is undetermined, and sampling error is suspected.[7]

The hexavalent chromium in the raw wastewater was effectively reduced during the first pass through the Kaselco Rx unit during batches 1 and 2 (see **Figure 8**). For batch 3, a residual concentration of hexavalent chromium was found in the Rx effluent after passes 1 and 2; however, it was fully reduced during the third pass.

The chemical mechanism for reducing chromium during the ETV evaluation was not specifically investigated. However, literature suggests that the dissolving iron anodes contribute ferrous ions to the wastewater, which chemically react with hexavalent chromium and reduce it to the trivalent state. During the reduction process, the iron may be converted to trivalent iron hydroxide, which can result in a co-precipitation effect, where the iron hydroxide adsorbs heavy metal cations onto its surface. This process has the advantage of being able to reduce chromium at a higher pH than is used with the conventional sulfide precipitation process [Ref. 3].

The analytical data indicate that manganese is also contributed to the wastewater by electrolytic dissolution of the steel anodes. Manganese was found in the raw wastewater

[7] The samples collected of the Rx effluent contain both liquid and solids, which made it difficult to collect a representative sample. If a higher than representative concentration of solids were collected in a sample, metals from the precipitated solids may leach into the water portion of the sample and produce non-representative results.

at an average concentration of 0.29 mg/L for batches 1 to 3, or a total mass of 3 g (based on 10,330 L treated). The mass of Mn found in the sludge was 66 g.

5.2 Pollutant Removal Efficiency

The pollutant removal efficiency was calculated separately for the Kaselco system and ion exchange system based on a comparison of influent and effluent concentrations for each pollutant parameter. Pollutant removal efficiency was calculated only for parameters that were found at concentrations above detection limits in the influent for at least one batch. These calculations are performed for paired sets of analytical results. Also, average removal efficiencies were calculated for the entire test. For the purpose of pollutant removal calculations, parameters that were not detected in the treated wastewater by analytical measurements were given a concentration value of zero.

The results of the pollutant removal efficiency analysis for the Kaselco system are shown in **Table 10**. Percent removal could not be calculated for sulfide, O&G (HEM), molybdenum, and silver because the concentration of these parameters in the raw wastewater was below detection limits for all three batches. The negative percent removal values for manganese and iron indicate that the concentration of these parameters increased during treatment, presumably due to dissolution of steel anodes. Iron is a non-regulated parameter. Manganese is not currently regulated by existing metal finishing standards; however, it is a regulated parameter in the proposed MP&M rule. Average pollutant percent removals for the remaining parameters averaged between 98.8 percent and 100.0 percent.

The results of the pollutant removal analysis for the water reuse system are shown in **Table 11**. Percent removal could not be calculated for sulfide, O&G (HEM), cadmium, molybdenum, silver, and tin because the concentration of these parameters in the raw wastewater was below detection limits for all three batches. Average pollutant percent removals for the remaining parameters ranged from 98.3 percent to 100.0 percent.

Parameter	Batch 1			Batch 2			Batch 3			Avg. for Three Batches, % Removal
	RX Influent Batch 1 mg/L	RX Effluent Batch 1 mg/L	% Removal Batch 1	RX Influent Batch 2 mg/L	RX Effluent Batch 2 mg/L	% Removal Period 2	RX Influent Batch 3 mg/L	RX Effluent Batch 3 mg/L	% Removal Batch 3	
O &G (HEM)	ND	ND	-	ND	-	-	ND	-	-	-
TDS	992	ND	100.0%	968	-	-	1,110	-	-	100.0%
TOC	45.4	ND	100.0%	24.4	ND	100.0%	28.4	-	-	100.0%
Cadmium	.007	ND	100.0%	ND	ND	-	ND	ND	-	100.0%
Chromium (T)	30.3	ND	100.0%	32.4	ND	100.0%	147	ND	100.0%	100.0%
Copper	2.45	ND	100.0%	.955	ND	100.0%	3.05	ND	100.0%	100.0%
Iron*	3.66	ND	100.0%	ND	ND	100.0%	72.7	ND	100.0%	100.0%
Lead	2.28	ND	100.0%	.320	ND	100.0%	1.19	ND	100.0%	100.0%
Manganese	.039	5.46	-	.030	ND	100.0%	0.79	ND	100.0%	100.0%
Molybdenum	ND	ND	-	ND	ND	-	ND	ND	-	-
Nickel	115	5.92	94.9%	104	.027	100.0%	123	.031	100.0%	100.0%
Silver	ND	ND	-	ND	ND	-	ND	ND	-	-
Tin	0.175	ND	100%	.086	ND	-	0.19	ND	100.0%	-
Zinc	2.78	.032	100.0%	2.25	ND	-	3.53	ND	100.0%	100.0%

* Iron and TDS are non-regulated parameters.
"-" indicates no analytical result for that parameter.
ND indicates not detected.

Table 10. Results of Pollutant Removal Efficiency Analysis for Kaselco System

		Rx (filtered)			Rx (digested)					
Parameter	**Raw**	**Pass 1**	**Pass 2**	**Pass 3**	**Pass 1**	**Pass 2**	**Pass 3***	**Clarifier Discharge**	**IX Influent**	**IX Effluent**
Cadmium, mg/L	ND	ND	ND	ND	ND	ND	-	ND	ND	ND
Chromium (T), mg/L	32.4	ND	ND	ND	31.6	1.34	-	0.116	0.256	ND
Chromium +6, mg/L	33.7	ND	ND	ND	-	-	-	ND	0.063	ND
Copper, mg/L	0.955	0.012	0.012	ND	1.26	0.384	-	0.017	0.020	ND
Iron, mg/L	ND	ND	ND	ND	153	182	-	5.90	2.00	ND
Lead, mg/L	0.320	ND	ND	ND	0.284	0.018	-	ND	ND	ND
Manganese, mg/L	0.030	1.33	1.07	ND	1.52	2.33	-	0.509	0.495	ND
Molybdenum, mg/Ll	ND	ND	ND	ND	ND	ND	-	ND	ND	ND
Nickel, mg/L	104	48.6	3.60	0.027	102	7.28	-	1.46	3.34	ND
Silver, mg/L	ND	ND	ND	ND	ND	ND	-	ND	ND	ND
Tin, mg/L	0.086	ND	ND	ND	0.077	ND	-	ND	ND	ND
Zinc, mg/L	2.25	0.392	0.036	ND	2.16	0.137	-	ND	0.059	ND
Specific Conductance, µS	1410	-	-	-	-	-	-	1580	1600	8.3
Lab pH	6.61	6.76	6.45	8.37	-	-	-	9.03	8.93	-
Field pH	6.0	6.1	6.9	8.0	-	-	-	8.5	8.2	-
TDS, mg/L	968	-	-	-	-	-	-	909	1150	62
TSS, mg/L	16	-	-	-	-	-	-	17	12	ND
Sulfide, mg/L	ND	-	-	-	-	-	-	ND	ND	ND
TOC, mg/L	24.4	-	-	-	-	-	-	23.0	19.1	ND
O&G, mg/L	ND	-	-	-	-	-	-		ND	ND

* No analysis of sample performed.
"-" Indicates no analytical result for that parameter.
ND indicates not detected.

Table 11. Results of Pollutant Removal Analysis for Water Reuse System (Kaselco/IX)

5.3 Ability to Meet Metal Finishing and Proposed Target Effluent Levels

The results of each test cycle were compared to the applicable metal finishing limitations and target level effluent limitations. To meet a metal finishing or target limit, the analytical result must be equal to or below the corresponding daily maximum value. The comparison was made separately for the Kaselco system and ion exchange system on a parameter-by-parameter basis for each batch. The applicable limitations are the pretreatment standards for existing sources for the metal finishing category (40 CFR 433.15) and proposed pretreatment standards for existing sources for the MP&M Job Shop subcategory [Ref. 2].

The results of the comparison for the Kaselco system are shown in **Table 12**. The metal finishing limitations were met for all parameters. The proposed MP&M limitations were met for all parameters with the exception of manganese during treatment of batch 1.

The results of the comparison for the ion exchange system are shown in **Table 13**. The metal finishing limitations and proposed MP&M limitations were met for all parameters.

Parameter	Metal Finishing Category Limits, Daily Max. mg/L	MP&M Job Shop Subcategory Limits, Daily Max. mg/L	Batch 1				Batch 2				Batch 3			
			IX Influent Batch 1 mg/L	IX Effluent Batch 1 mg/L	IX Effluent Meets Metal Finishing Limits Yes/No	IX Effluent Meets MP&M Limits Yes/No	IX Influent Batch 2 mg/L	IX Effluent Batch 2 mg/L	IX Effluent Meets Metal Finishing Limits Yes/No	IX Effluent Meets MP&M Limits Yes/No	IX Influent Batch 3 mg/L	IX Effluent Batch 3 mg/L	IX Effluent Meets Metal Finishing Limits Yes/No	IX Effluent Meets Metal Finishing Limits Yes/No
Sulfide	NR	31	ND	ND	NR	Yes	ND	ND	NR	Yes	ND	ND	NR	Yes
O & G (HEM)	NR	52	ND	ND	NR	Yes	ND	ND	NR	Yes	ND	ND	NR	Yes
TOC	NR	78	19.6	ND	NR	Yes	19.1	ND	NR	Yes	20.2	1.01	NR	Yes
Cadmium	0.69	0.21	ND	ND	Yes	Yes	ND	ND	Yes	Yes	ND	ND	Yes	Yes
Chromium	2.77	1.3	0.356	ND	Yes	Yes	0.256	ND	Yes	Yes	0.232	ND	Yes	Yes
Copper	3.38	0.55	0.129	ND	Yes	Yes	0.020	ND	Yes	Yes	ND	ND	Yes	Yes
Lead	0.69	0.12	0.046	ND	Yes	Yes	ND	ND	Yes	Yes	ND	ND	Yes	Yes
Manganese	NR	0.25	1.40	ND	NR	Yes	0.495	ND	NR	Yes	0.338	ND	NR	Yes
Molybdenum	NR	0.79	ND	ND	NR	Yes	ND	ND	NR	Yes	ND	ND	NR	Yes
Nickel	3.98	1.5	10.5	ND	Yes	Yes	3.34	ND	Yes	Yes	1.64	ND	Yes	Yes
Silver	0.43	0.15	ND	ND	Yes	Yes	ND	ND	Yes	Yes	ND	ND	Yes	Yes
Tin	NR	1.8	ND	ND	NR	Yes	ND	ND	NR	Yes	ND	ND	NR	Yes
Zinc	2.61	0.35	0.288	ND	Yes	Yes	ND	ND	Yes	Yes	ND	ND	Yes	Yes

Raw wastewater NR = not regulated
ND = not detected

Table 12. Results of Regulatory Limits Comparison Analysis for Kaselco System

Parameter	Metal Finishing Category Limits, Daily Max. mg/L	MP&M Job Shop Subcategory Limits, Daily Max. mg/L	Batch 1				Batch 2				Batch 3			
			IX Influent Batch 1 mg/L	IX Effluent Batch 1 mg/L	IX Effluent Meets Metal Finishing Limits Yes/No	IX Effluent Meets MP&M Limits Yes/No	IX Influent Batch 2 mg/L	IX Effluent Batch 2 mg/L	IX Effluent Meets Metal Finishing Limits Yes/No	IX Effluent Meets MP&M Limits Yes/No	IX Influent Batch 3 mg/L	IX Effluent Batch 3 mg/L	IX Effluent Meets Metal Finishing Limits Yes/No	IX Effluent Meets Metal Finishing Limits Yes/No
Sulfide	NR	31	ND	ND	NR	Yes	ND	ND	NR	Yes	ND	ND	NR	Yes
O & G (HEM)	NR	52	ND	ND	NR	Yes	ND	ND	NR	Yes	ND	ND	NR	Yes
TOC	NR	78	19.6	ND	NR	Yes	19.1	ND	NR	Yes	20.2	1.01	NR	Yes
Cadmium	0.69	0.21	ND	ND	Yes	Yes	ND	ND	Yes	Yes	ND	ND	Yes	Yes
Chromium	2.77	1.3	0.356	ND	Yes	Yes	0.256	ND	Yes	Yes	0.232	ND	Yes	Yes
Copper	3.38	0.55	0.129	ND	Yes	Yes	0.020	ND	Yes	Yes	ND	ND	Yes	Yes
Lead	0.69	0.12	0.046	ND	Yes	Yes	ND	ND	Yes	Yes	ND	ND	Yes	Yes
Manganese	NR	0.25	1.40	ND	NR	Yes	0.495	ND	NR	Yes	0.338	ND	NR	Yes
Molybdenum	NR	0.79	ND	ND	NR	Yes	ND	ND	NR	Yes	ND	ND	NR	Yes
Nickel	3.98	1.5	10.5	ND	Yes	Yes	3.34	ND	Yes	Yes	1.64	ND	Yes	Yes
Silver	0.43	0.15	ND	ND	Yes	Yes	ND	ND	Yes	Yes	ND	ND	Yes	Yes
Tin	NR	1.8	ND	ND	NR	Yes	ND	ND	NR	Yes	ND	ND	NR	Yes
Zinc	2.61	0.35	0.288	ND	Yes	Yes	ND	ND	Yes	Yes	ND	ND	Yes	Yes

NR = not regulated
ND = not detected

Table 13. Results of Regulatory Limits Comparison Analysis for Ion Exchange System

5.4 Reusability of Treated Wastewater

The reusability of the treated wastewater as process water was determined by comparing the results of the specific conductance and TDS analytical tests of the final treated water (ion exchange system effluent, i.e., sample point 7) to standards used by Gull Industries for water reuse. Treated water meeting these standards was deemed reusable. The Gull Industries standards are:

- Specific conductance: maximum of 500 µS
- TDS: maximum of 250 mg/L

The results of this comparison are shown in **Table 14**. For wastewater batches 1, 2 and 3, the combined Kaselco/ion exchange polishing system met the Gull Industries water reuse criteria.

Parameter	Recycle Criterion	Raw Wastewater			IX Effluent			IX Effluent Meets Criterion Yes/No
		Batch 1	Batch 2	Batch 3	Batch 1	Batch 2	Batch 3	
Specific conductance, µS	500	2,190	1,410	1,520	19.6	6.3	8.3	Yes (Batches 1-3)
TDS, mg/L	250	992	968	1,110	<10*	62	56	Yes (Batches 1-3)

*below detection limit of 10 mg/L.

Table 14. Comparison of Analytical Results and Gull Industries Water Recycling Criteria

It should be noted that during the period of testing, it was observed that Gull Industries reused the water produced by the combined systems as rinse water on their decorative chromium electroplating line.

5.5 Energy Use

The energy requirements were calculated separately for the Kaselco and ion exchange systems. The results of the energy use analysis are presented in **Table 15**. Electricity use for the Kaselco system during the ETV test (batches 1 to 3) was 185.7 kWh, which is equivalent to 17.9 kWh/1,000 L. Electricity use for the ion exchange system during the ETV test was 6.9 kWh, which is equivalent to 0.67 kWh/1,000 L. For pumps, energy use was calculated by summing the total quantity of horsepower (hp) hours for each system and dividing by 1.341 HP-hr/kWh to arrive at electricity needs. Electricity use for rectifier input was calculated by multiplying the amp-hour recorded data (**Table 7**) by 32.5 V (average voltage) and assuming a rectifier efficiency of 80 percent.

Item	Hp-Hr.	Electricity Use kWh	Electricity Use kWh/1,000 L (kWh/1,000 gal)
Kaselco System			
Pumps	60	44.7	4.3 (16.4)
Rectifiers	-	141	13.6 (51.5)
Total Kaselco system		185.7	17.9 (67.9)
IX System			
Pumps	9.2	6.9	0.67 (2.54)
Total IX system		6.9	0.67 (2.54)

Table 15. Results of Energy Use Analysis

5.6 Cost Analysis

This analysis determines the operating cost of the Kaselco and ion exchange systems considering the following cost parameters: chemical reagents, steel plates, other materials (e.g., filters), electricity, labor, and sludge management. Costs are expressed in dollars per thousand liters processed ($/1000 L) by dividing the cost by the total volume of wastewater processed during the verification test. Total costs are calculated separately for each system by summing the individual cost elements. The calculation of treatment cost for either system is shown below.

$$C_{treat\ cost} = (R + A + M + E + L + S) / V$$

where:

$C_{treat\ cost}$ = cost of treatment ($/1000 L)
R = cost of chemical reagents used ($/1000 L)
A = cost of steel plates consumed ($/1000 L)
M = cost of materials used ($/1000 L)
E = cost of electricity used ($/1000 L)
L = cost of labor ($/1000 L)
S = cost of sludge management ($/1000 L)
V = volume of wastewater processed during the verification test (1000 L)

The results of the operating cost analysis are shown in **Table 16**. Separate operating costs are presented for the Kaselco system and ion exchange system and total costs for the combined systems are also presented. Summary costs are displayed both with and without labor costs. The operating costs are presented in this manner because the Kaselco unit tested during this ETV project is a manual unit designed for processing small wastewater flows. Kaselco also manufactures larger automated systems. Manual systems, by nature, are more labor intensive to operate.

Cost Parameter	Unit Cost	Units Used During ETV Test	Cost During ETV Test Batches 1 to 3	Normalized Cost, $/1,000 L ($/1,000 gal.)
Kaselco System				
Polymer	$3.70/L ($14.00/gal.)	0.204 L (0.054 gal.)	$0.75	$0.07 ($0.26)
Steel Plates	$140/set	0.061 sets	$8.54	$0.83 ($3.13)
Electricity	$0.10/kWh	185.7 kWh	$18.57	$1.80 ($6.80)
Sludge Disposal	$0.55/kg (0.25/lb.)	63 kg (139 lbs.)	$34.75	$3.36 ($12.72)
Total Kaselco System, except labor			***$62.61***	***$6.06 ($22.91)***
Labor	$20.00/hr.	6.0 hrs.	$120.00	$12.12 ($43.94)
Total Kaselco System, including labor			**$182.61**	**$18.18 ($66.85)**
Ion Exchange System				
Sodium Hydroxide	$0.38/L ($1.44/gal.)	47.9 L (12.7 gal.)	$18.20	$1.76 ($6.66)
Hydrochloric Acid	$0.28/L ($1.06/gal.)	34.6 L (9.1 gal.)	$9.69	$0.94 ($3.55)
Electricity	$0.10/kWh	6.9 kWh	$0.69	$0.07 ($0.26)
Total Ion Exchange System, except labor			**$28.58**	**$2.77 ($10.47)**
Labor	$20/hr.	0.59 hrs.	$11.80	$1.14 ($4.32)
Total Ion Exchange System, including labor			$40.38	$3.91 ($14.79)
Combined Kaselco and Ion Exchange Systems				
Combined Kaselco and Ion Exchange Systems, except labor			**$91.19**	**$8.83 ($33.38)**
Combined Kaselco and Ion Exchange Systems, including labor			**$222.99**	**$22.09 ($81.64)**

Table 16. Results of Cost Analysis

5.7 Sludge Generation Analysis

The volume of sludge generated by the Kaselco system was measured at the end of the verification test (after treatment of three batches of wastewater totaling 10,333 L). The laboratory analyzed representative samples of the sludge for percent solids, density, and metals concentration. Results from measurements and analytical tests are summarized in **Table 17**.

The volume of sludge generated from the filter press was 65.4 L (2.31 ft^3). Analytical results show that the sludge had a specific gravity (bulk density) of 1.20. The calculated weight of the sludge is 78.5 kg (172.6 lbs.). Analytical results for the sludge are shown in **Table 5**.

Parameter	Values	Normalized Data Volume or Weight of Sludge per Volume of Wastewater Treated
Volume of sludge generated (wet basis)	65.4 L (2.15 ft^3)	6.3 L/1,000 L of wastewater treated (0.8 ft^3/1,000 gal.)
Calculated weight of sludge generated (wet basis)	78.5kg (173 lbs.)	7.6 kg/1,000 L of wastewater treated (63.4 lbs./ 1,000 gal.)

Table 17. Characterization of Sludge Generated from Kaselco System

5.8 Environmental Benefit

This analysis quantifies the environmental benefit of the combined Kaselco/ion exchange polishing technologies installed at Gull Industries by determining the quantity of regulated pollutants removed beyond the level required by the metal finishing regulations (40 CFR 433). The results of the analysis are shown in **Table 18**. The raw wastewater concentrations for cadmium, copper, and silver were below the values for metal finishing limitations; and therefore, were used in calculating the environmental benefit for these three parameters.

Parameter	Metal Finishing Limitations		Raw Wastewater (Batches 1-3)		IX Discharge (Batches 1-3)		Environmental Benefit, g*
	Avg. Daily Max., mg/L	Allowable Mass Discharge, g*	Avg. Conc., mg/L	Avg. Mass Discharge, g*	Avg. Conc., mg/L	Avg. Mass Discharge, g*	
Cadmium	0.69	7.1	0.002	0.02	0.0	0.0	0.02
Chromium	2.77	28.6	31.4[1]	324.5	0.0	0.0	295.8
Copper	3.38	34.9	2.2	22.7	0.0	0.0	22.7
Lead	0.69	7.1	1.3	13.4	0.0	0.0	7.1
Nickel	3.98	41.1	114	1,178.0	0.0	0.0	41.1
Silver	0.43	4.4	0.0	0.0	0.0	0.0	0.0
Zinc	2.61	27.0	2.8	28.9	0.0	0.0	27.0
Total							393.7

* Based on 10,333 L (2,730 gal.) treated. [1]Batches 1&2 only. Batch 3 was an outlier.

Table 18. Results of Environmental Benefit Analysis

The overall environmental benefit from use of the combined Kaselco/ion exchange polishing system is a reduction of 126.5 g of regulated metals. On an annual basis, assuming 3,400 L treated per day (260 days/year), the environmental benefit would be a reduction of 10,822 g of metal discharged.

6.0 REFERENCES

1) EPA, Effluent Limitations Guidelines, Pretreatment Standards, and New Source Performance Standards for the Metal Finishing Point Source Category (40 CFR 433).
2) EPA, Effluent Limitations Guidelines, Pretreatment Standards, and New Source Performance Standards for the Metal Products and Machinery Point Source Category; Proposed Rule (66 FR 424, January 3, 2001).
3) Cushnie, George C., *Pollution Prevention and Control for Plating Operations*, National Center for Manufacturing Sciences, Ann Arbor, MI, 1994.
4) Concurrent Technologies Corporation, "*Environmental Technology Verification Program Metal Finishing Technologies Pollution Prevention Verification Test Plan for the Evaluation of the Kaselco Electrocoagulation Treatment System,*" November 2, 2001.
5) Concurrent Technologies Corporation, "Environmental Technology Verification Program Metal Finishing Technologies (ETV-MF) Quality Management Plan," Rev. 1, March 26, 2001.