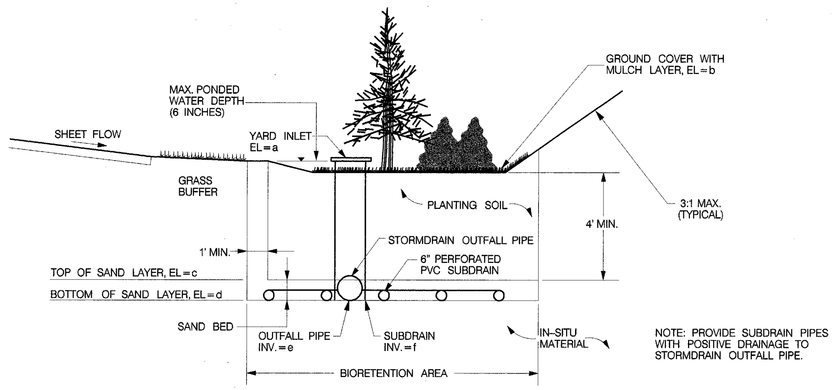

NOTE: PROVIDE SUBDRAIN PIPES WITH POSITIVE DRAINAGE TO STORMDRAIN OUTFALL PIPE.

A TYPICAL BIORETENTION SECTION
NOT TO SCALE

BIORETENTION FACILITY ELEVATIONS

BIORETENTION FACILITY NO.	AREA OF FACILITY	a. OVERFLOW INVERT	b. TOP OF BIORETENTION	c. TOP OF SAND LAYER	d. BOTTOM OF SAND LAYER	e. OUTFALL PIPE INVERT	f. SUBDRAIN INVERT
BR-1	1395	322.5	322.0	318.0	317.5	316.0	316.5
BR-2	1298	317.5	317.0	313.0	310.5	311.0	311.5
BR-3	1667	322.5	322.0	318.0	316.5	316.0	316.5
BR-4	2325	308.5	308.0	304.0	302.0	302.5	303.0
BR-5	1628	309.5	309.0	305.0	303.5	296.4	303.5
BR-6	1318	326.5	326.0	322.0	319.5	320.0	320.5
BR-7	3139	301.5	301.0	297.0	295.5	295.0	295.5
BR-8	2092	314.5	314.0	310.0	308.5	308.0	308.5
BR-9	2364	305.5	305.0	301.0	298.5	298.0	298.5
BR-10	2945	294.5	294.0	290.0	288.5	288.0	288.5

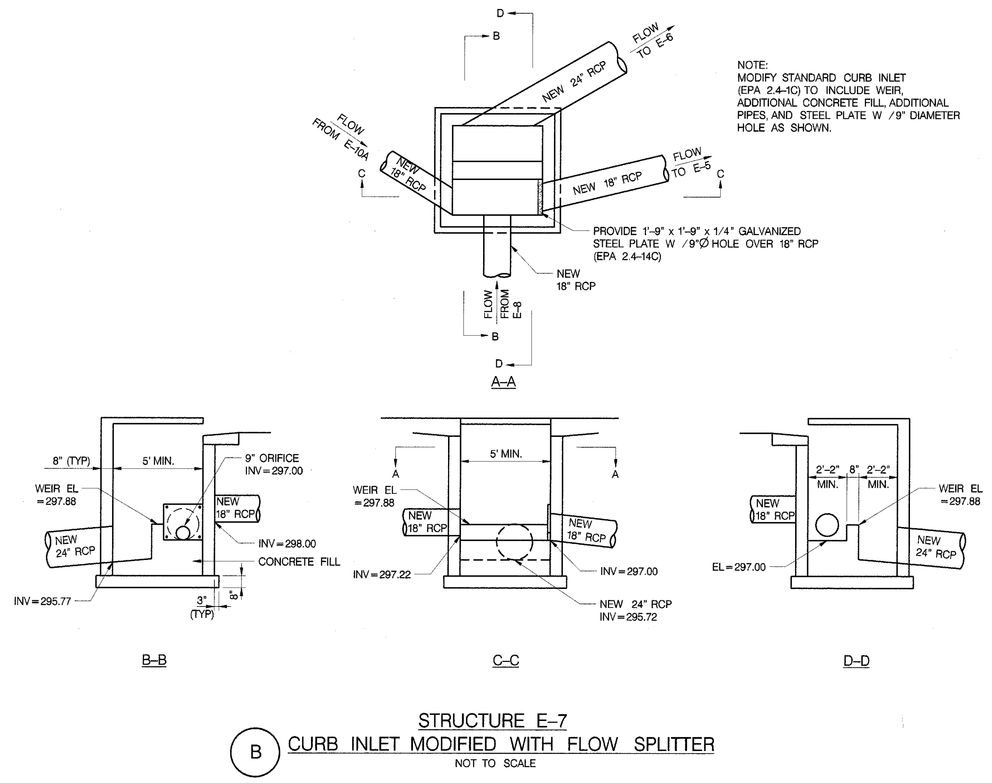

NOTE:
MODIFY STANDARD CURB INLET (EPA 2.4-1C) TO INCLUDE WEIR, ADDITIONAL CONCRETE FILL, ADDITIONAL PIPES, AND STEEL PLATE W /9" DIAMETER HOLE AS SHOWN.

STRUCTURE E-7
B CURB INLET MODIFIED WITH FLOW SPLITTER
NOT TO SCALE

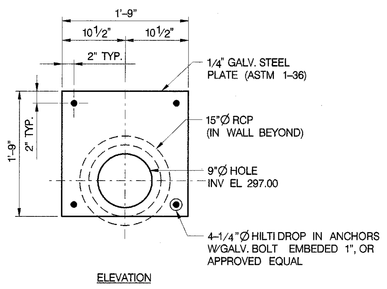

E DETAIL – ℙ 21" x 21" x 1/4"
NOT TO SCALE

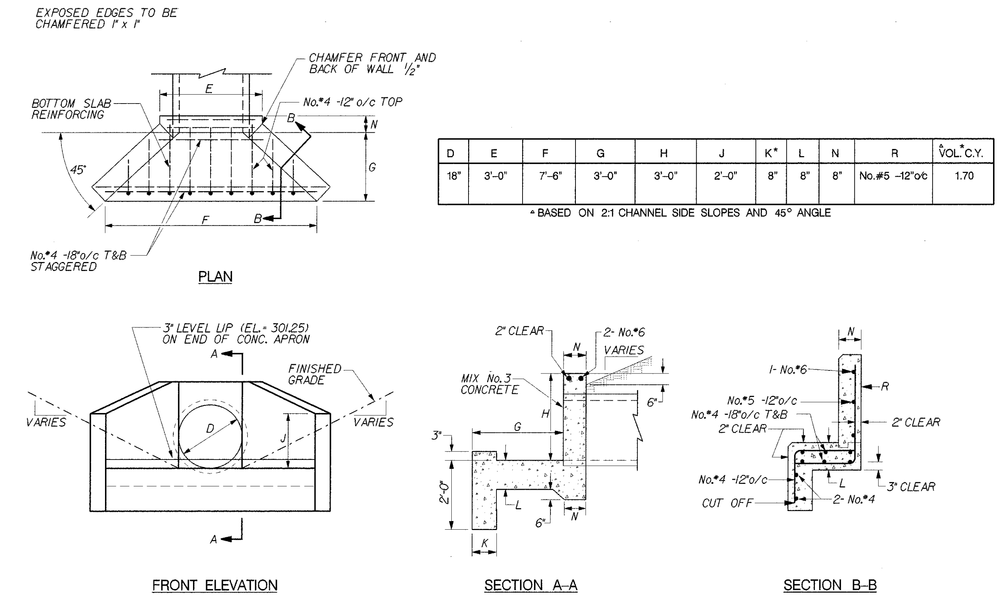

D ENDWALL – STRUCTURE B-10
NOT TO SCALE

D	E	F	G	H	J	K*	L	N	R	VOL.* C.Y.
18"	3'-0"	7'-6"	3'-0"	3'-0"	2'-0"	8"	8"	8"	No.#5 -12"o/c	1.70

* BASED ON 2:1 CHANNEL SIDE SLOPES AND 45° ANGLE

BIORETENTION FACILITY PIPE SCHEDULE

BIORETENTION AREA	6" PERFORATED PVC PIPE	6" PVC PIPE	NUMBER OF TEE JOINTS	NUMBER OF 90 DEGREE ELBOWS	NUMBER OF 45 DEGREE BENDS	NUMBER OF END CAPS
BR-1	80 FT.	70 FT.	6	2	0	8
BR-2	104 FT.	70 FT.	11	2	0	13
BR-3	80 FT.	97 FT.	8	2	0	10
BR-4	108 FT.	48 FT.	6	2	0	8
BR-5	102 FT.	79 FT.	6	2	0	8
BR-6	61 FT.	50 FT.	4	1	0	5
BR-7	156 FT.	170 FT.	11	2	1	13
BR-8	99 FT.	66 FT.	5	2	0	7
BR-9	136 FT.	77 FT.	8	2	0	10
BR-10	255 FT.	52 FT.	11	2	0	13
TOTAL	1181 FT.	779 FT.	76	19	1	95

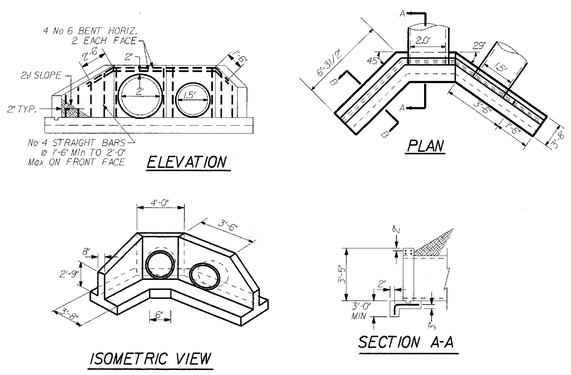

NOTES:
1. CHANNEL SIDE SLOPE AT OUTFALL TO BE:
H = 2, V = 1 FOR RIPRAP
H = 3, V = 1 FOR EARTH FILL, SOD, OR SEED
2. ALL EXPOSED EDGES TO HAVE ¾" x ¾" CHAMFER

C ENDWALL STRUCTURE G-1
RCP DOUBLE WINGWALL NTS

Bioretention Facility Plant Schedule

	Scientific Name	Common Name	Bioretention Facility	BR-1	BR-2	BR-3	BR-4	BR-5	BR-6	BR-7	BR-8	BR-9	BR-10
			Total No. of Plantings (Trees-Shrubs)	11-21	10-20	13-26	18-36	13-25	10-20	24-48	16-32	18-36	23-45
			Abbreviation										
TREES:	Acer rubrum	red maple	AR	4	3					6	6		8
	Amelanchier canadensis	shadbrush	AC				4	4					
	Betula nigra	river birch	BN		3		6				4		
	Juniperus virginiana	eastern red cedar	JV				4			6			
	Platanus accidentalis	sycamore	PA			5			3			6	
	Quercus bicolor	swamp white oak	QB	3							6	6	
	Quercus palustris	pin oak	QP1			4	6	5	3				8
	Quercus phellos	willow oak	QP		4		6			6			7
	Quercus rubra	red oak	QR	4		4				6		6	
SHRUBS:	Clethra alnifolia	sweet pepperbush	CA		5		9		5		8		
	Cornus stolonifera	red osier dogwood	CS	6		8	9	6					12
	Ilex glabra	inkberry	IG			8				12		9	
	Ilex verticillata	winterberry	IV		7		9	6	5	12			
	Lindera benzoin	spicebush	LB	5						12		9	11
	Myrica pensylvanica	bayberry	MP	5		6			5		8	9	
	Physocarpus opulifolius	ninebark	PO				7			12	8		
	Viburnum cassinoides	northern wild raisin	VCA		4		9				8		11
	Viburnum dentatum	arrow-wood	VD		4	6		6				9	
	Viburnum lentago	nannyberry	VL	5		6			5				11
Ground Cover:	Agrostis alba	red top	AGA		1/2		1/2			1/2			
	Ambrosiagrandi	bluejoint	AG	1/3						1/2		1/2	
	Deschampsia caespitosa	tufted hairgrass	DC	1/3									1/2
	Pachysandra terminalis	Japanese pachysandra	PT			1/2			1/2			1/4	
	Panicum virgatum	switch grass	PV			1/2		1/2			1/2		
	Vinca major	large periwinkle	VMA		1/2								1/2
	Vinca minor	common periwinkle	VMI	1/3			1/2	1/2	1/2		1/2	1/4	

COPYRIGHT © 1996
HELLMUTH, OBATA & KASSABAUM, P.C.

Environmental Protection Agency
Research & Administration Facility
Research Triangle Park, North Carolina

No.	Revision	Date
1	REBID	2-28-97

CONSTRUCTION DOCUMENTS

Architects
Hellmuth, Obata & Kassabaum, P.C.
Washington D.C.

Associated Architects
The Roberts/Stacy Group
Raleigh, N.C.

Civil Engineers
Greenhorne & O'Mara, Inc.
Greenbelt, MD./ Raleigh, N.C.

A/E Project Number 92-175-001
A/E Contract Number 68-C2-0115

Issue Date FEBRUARY 28, 1997
Type CIVIL
Title BIORETENTION DETAILS

EPA 2.4-14
Cat. - Subcat. - Sheet

FILE NAME: J:\3246.EPA\CADD\VASKA\PLANS\BIONOTES.SHT
Thu Feb 27 08:36:37 1997 C:\PLOT\QUEUE\PRIORITY.qcf P:\PRIORITY\2414.PRF