APPENDIX FOR SITE 1

Site 1 has the same software and hardware design as Site 3 with the following exceptions:

1. Site 1 has only one CVS cabinet. Therefore only one cable set was provided for monitoring the CVS Valves and Drivers Aid Buttons for the Opto-22 Rack 2. Rack 2 was delivered with Opto-22 cards and cable strain relief cable glands for the second CVS cabinet to keep the Opto-22 rack 2 design the same as Site 3.

2. The following are the IP numbers for the three racks at Site 1:
   Gas Analyzer - Rack 0: 204.47.209.154
   Master Module - Rack 1: 204.47.209.155
   Electronics Module - Rack 2: 204.47.209.156

APPENDIX FOR SITE 2

Site 2 has the same software and hardware design as Site 3 with the following exceptions:

The following are the IP numbers for the three racks at Site 2:

Gas Analyzer	- Rack 0: 204.47.209.157
Master Module	- Rack 1: 204.47.209.158
Electronics Module	- Rack 2: 204.47.209.159

APPENDIX FOR SITE 4

Site 4 has the same software and hardware design as Site 3 with the following exceptions:

1. Site 4 has only one CVS cabinet. Therefore only one cable set was provided for monitoring the CVS Valves and Drivers Aid Buttons for the Opto-22 Rack 2. Rack 2 was delivered with Opto-22 cards and cable strain relief cable glands for the second CVS cabinet to keep the Opto-22 rack 2 design the same as Site 3.

2. The following are the IP numbers for the three racks at Site 4:
   Gas Analyzer - Rack 0: 204.47.209.183
   Master Module - Rack 1: 204.47.209.184
   Electronics Module - Rack 2: 204.47.209.185

APPENDIX FOR SITE 5 (Preliminary)

Site 5 is the Engine Test Cell site. The design for this site consists of two Hoffman Racks as shown in Figure 1.

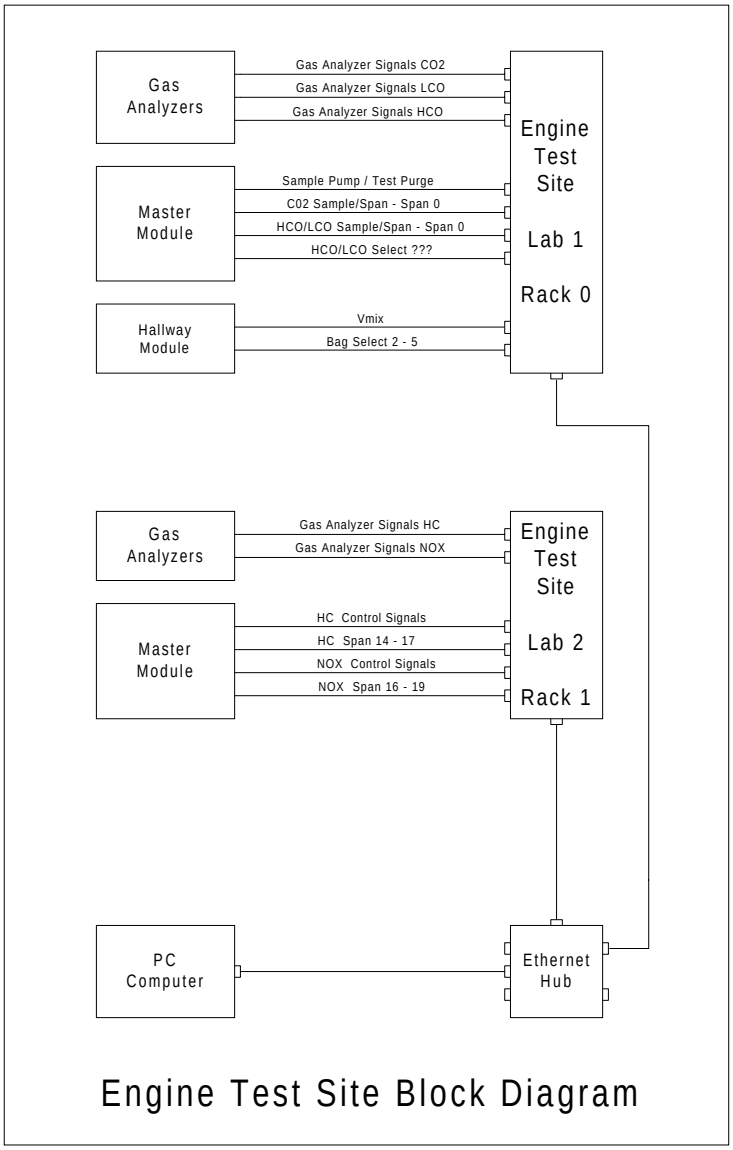

Figure 1: Engine Test Site Block Diagram

The Engine Test Site consists of two separate Labs. The Outer Lab is referred to as Lab 1 and the Inner Lab is referred to as Lab 2. Each Lab has its own Hoffman Box housing a 12 position OPTO-22 Rack. Rack 0 goes with Lab 1 and Rack 1 goes with Lab 2 as shown in the block diagram.

Rack 0 has inputs for monitoring three Gas Analyzers. It will gather data on C02, LCO, and HCO. Rack 0 will have AMP 200346-2 connectors for these Analyzers with the same pin-out described in Site 3. It also will input a Vmix signal to a digital input counter and will monitor four 24Volt valves for bag select signals 2 through 5. It will also monitor 115 VAC push-button closures for Sample Pump, Test Purge, C02 Sample, CO2 Span, CO2 Span 0, HCO/LCO Sample/Span signals.

Rack 1 for the inner lab has inputs for monitoring two Gas Analyzers. It will gather data on HC and NOX using the same connector definition as Site 3. It also will monitor 115 VAC push-button closures for monitoring HC and NOX control and Span signals.

An Ethernet Hub will be provided to tie the two racks together. No new software will be delivered by TRW for Site 5.

The following are the IP numbers for the two racks at Site 5:

Lab 1 - Rack 0: 204.47.209.186
Lab 2 - Rack 1: 204.47.209.187

Figure 2 shows the detailed design of Rack 0.

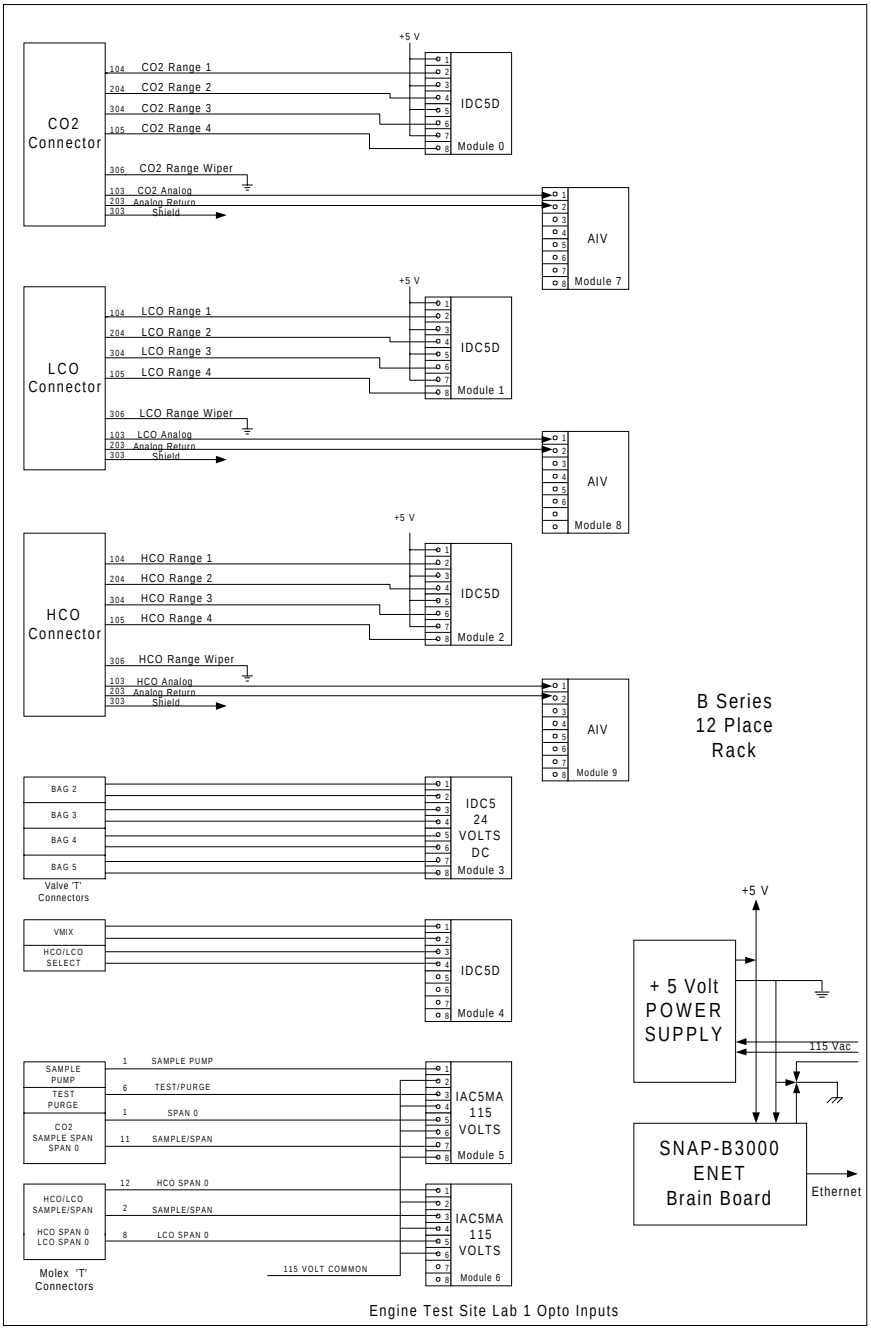

Figure 2 – Engine Test Site Lab 1 Opto Inputs

Modules 0, 1, and 2 will receive the range selections for CO2, LCO, and HCO. These modules will be wired to AMP 200346-2 connectors using the same wiring configuration as site 3. Modules 7, 8, and 9 will receive the Analog Inputs from the CO2, LCO, and HCO gas analyzers. These modules were placed in slots 7, 8, and 9 because the OPTO-22 racks will only accept digital inputs in the first 8 slots. Slots 3 through 6 were needed for digital inputs.

Module 3 will monitor four bag select signals from 24 volt valves. Module 4 will monitor the Vmix signal from the Electronics Module in the hallway. It will also monitor the HCO/LCO select button.

Modules 5 and 6 will monitor the following 115 VAC signals by using custom “T” connectors: Sample Pump, Test/Purge, CO2 Sample/Span, CO2 Span 0, HCO/LCO Sample/Span, HCO Span 0, LCO Span 0.

The rack will contain a 5 Volt Power Supply for the input modules, and also a SNAP-B3000 ENET Brain Board.

Figure 3 shows the detailed design of Rack 1.

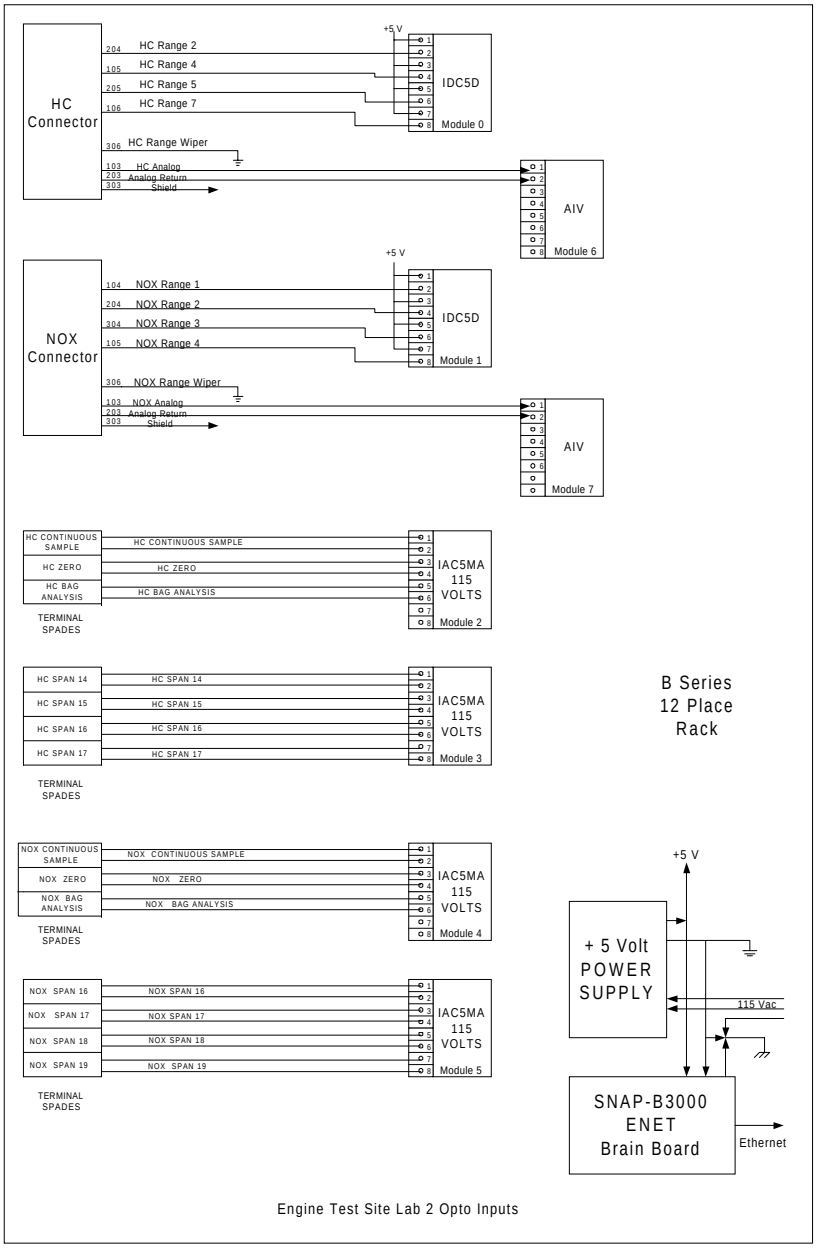

Figure 3 – Engine Test Site Lab 2 Opto Inputs

Modules 1 and 2 will receive the range selections for HC and NOX. These modules will be wired to AMP 200346-2 connectors using the same wiring configuration as site 3. You will note that the HC connector uses different range selection pins than the other Gas Analyzers.

Modules 7 and 8 will receive the Analog Inputs from the HC and NOX gas analyzers. These modules were placed in slots 7 and 8 because the OPTO-22 racks will only accept digital inputs in the first 8 slots. Slots 3 through 6 were needed for digital inputs.

Modules 3,4,5, and 6 will monitor the 115 VAC signals from push buttons on the master module. Attachments will be made to the existing terminal strips containing the signals shown in figure 3.

The rack will contain a 5 Volt Power Supply for the input modules, and also a SNAP-B3000 ENET Brain Board.

Detailed Design Tables

Opto Site 5 Lab 1	**Rack Number**	**Cable Group Alpha 2216C – 2241C**
Gas Analyzer	0	CO2 Connector AMP 200346-2

Signal Name	**Source Connector**	**Pin Number**	**Wire Color**	**Opto-22 Module**	**Module Number**	**Module Pin Number**	**Module Type**
CO2 Range 1	CO2	104	Red	IDC5D	0	2	Digital
CO2 Range 2	CO2	204	White	IDC5D	0	4	Digital
CO2 Range 3	CO2	304	Green	IDC5D	0	6	Digital
CO2 Range 4	CO2	105	Blue	IDC5D	0	8	Digital
CO2 Range Wiper	CO2	306	Black	Screw Terminal Ground			
CO2 Analog	CO2	103	Red	AIV	7	1	Analog
CO2 Analog Return	CO2	203	Black	AIV	7	2	Analog
CO2 Shield	**CO2**	**303**	**Shield**				

Opto Site 5 Lab 1	**Rack Number**	**Cable Group Alpha 2216C – 2241C**
Gas Analyzer	0	LCO Connector AMP 200346-2

Signal Name	**Source Connector**	**Pin Number**	**Wire Color**	**Opto-22 Module**	**Module Number**	**Module Pin Number**	**Module Type**
LCO Range 1	LCO	104	Red	IDC5D	1	2	Digital
LCO Range 2	LCO	204	White	IDC5D	1	4	Digital
LCO Range 3	LCO	304	Green	IDC5D	1	6	Digital
LCO Range 4	LCO	105	Blue	IDC5D	1	8	Digital
LCO Range Wiper	LCO	306	Black	Screw Terminal Ground			
LCO Analog	LCO	103	Red	AIV	8	1	Analog
LCO Analog Return	LCO	203	Black	AIV	8	2	Analog
LCO Shield	**LCO**	**303**	**Shield**				

Opto Site 5 Lab 1	**Rack Number**	**Cable Group Alpha 2216C – 2241C**
Gas Analyzer	0	HCO Connector AMP 200346-2

Signal Name	**Source Connector**	**Pin Number**	**Wire Color**	**Opto-22 Module**	**Module Number**	**Module Pin Number**	**Module Type**
HCO Range 1	HCO	104	Red	IDC5D	2	2	Digital
HCO Range 2	HCO	204	White	IDC5D	2	4	Digital
HCO Range 3	HCO	304	Green	IDC5D	2	6	Digital
HCO Range 4	HCO	105	Blue	IDC5D	2	8	Digital
HCO Range Wiper	HCO	306	Black	Screw Terminal Ground			
HCO Analog	HCO	103	Red	AIV	9	1	Analog
HCO Analog Return	HCO	203	Black	AIV	9	2	Analog
HCO Shield	**HCO**	**303**	**Shield**				

Opto Site 5 Lab 1	Rack Number	Cable Group Alpha 2241C
24 Volt Bag Select	0	

Signal Name	Source Connector	Pin Number	Wire Color	Opto-22 Module	Module Number	Module Pin Number	Module Type
Bag 2 Select	Bag 2	1	Red	IDC5	3	1	Digital
Return		2	Black	IDC5	3	2	Digital
Bag 3 Select	Bag 3	1	Red	IDC5	3	3	Digital
Return		2	Black	IDC5	3	4	Digital
Bag 4 Select	Bag 4	1	Red	IDC5	3	5	Digital
Return		2	Black	IDC5	3	6	Digital
Bag 5 Select	Bag 5	1	Red	IDC5	3	7	Digital
Return		2	Black	IDC5	3	8	Digital

Opto Site 5 Lab 1	Rack Number	Cable Group
Vmix, HCO/LCO Select	0	

Signal Name	Source Connector	Pin Number	Wire Color	Opto-22 Module	Module Number	Module Pin Number	Module Type
Vmix in	TBD	1		IDC5D	4	1	Digital
Return		2		IDC5D	4	2	Digital
HCO/LCO Select	TBD	1		IDC5D	4	3	Digital
Return		2		IDC5D	4	4	Digital

Opto Site 5 Lab 1	**Rack Number**	**Cable Group Alpha 2241C**
115 Volt AC Inputs	0	CO2

Signal Name	**Source Connector**	**Pin Number**	**Wire Color**	**Opto-22 Module**	**Module Number**	**Module Pin Number**	**Module Type**
Sample Pump	SMP	1	Red	IAC5MA	5	1	Digital
Return				IAC5MA	5	2	Digital
Test Purge	SMP	6	Black	IAC5MA	5	3	Digital
Return				IAC5MA	5	4	Digital
CO2 Span 0	CO2	1	Red	IAC5MA	5	5	Digital
Return				IAC5MA	5	6	Digital
CO2 Sample/Span	CO2	11	Black	IAC5MA	5	7	Digital
Return				IAC5MA	5	8	Digital

Opto Site 5 Lab 1	**Rack Number**	**Cable Group Alpha 2241C**
115 Volt AC Inputs	0	CO2

Signal Name	**Source Connector**	**Pin Number**	**Wire Color**	**Opto-22 Module**	**Module Number**	**Module Pin Number**	**Module Type**
HCO Span 0	HCO	12	Red	IAC5MA	6	1	Digital
Return				IAC5MA	6	2	Digital
HCO/LC0 Smp/Span	HCO	2	Black	IAC5MA	6	3	Digital
Return				IAC5MA	6	4	Digital
LCO Span 0	LCO	8	Red	IAC5MA	6	5	Digital
Return				IAC5MA	6	6	Digital

Note: The above 115 Volt Signals use a Red/Black pair Alpha 2241C cable for a common return.

Opto Site 5 Lab 2	**Rack Number**	**Cable Group Alpha 2216C – 2241C**
Gas Analyzer	1	HC Connector AMP 200346-2

Signal Name	**Source Connector**	**Pin Number**	**Wire Color**	**Opto-22 Module**	**Module Number**	**Module Pin Number**	**Module Type**
HC Range 2	HC	204	Red	IDC5D	0	2	Digital
HC Range 4	HC	105	White	IDC5D	0	4	Digital
HC Range 5	HC	205	Green	IDC5D	0	6	Digital
HC Range 7	HC	106	Blue	IDC5D	0	8	Digital
HC Range Wiper	HC	306	Black	Screw Terminal Ground			
HC Analog	HC	103	Red	AIV	6	1	Analog
HC Analog Return	HC	203	Black	AIV	6	2	Analog
HC Shield	HC	303	Shield				

Opto Site 5 Lab 2	**Rack Number**	**Cable Group Alpha 2216C – 2241C**
Gas Analyzer	1	NOx Connector AMP 200346-2

Signal Name	**Source Connector**	**Pin Number**	**Wire Color**	**Opto-22 Module**	**Module Number**	**Module Pin Number**	**Module Type**
NOx Range 1	NOx	104	Red	IDC5D	1	2	Digital
NOx Range 2	NOx	204	White	IDC5D	1	4	Digital
NOx Range 3	NOx	304	Green	IDC5D	1	6	Digital
NOx Range 4	NOx	105	Blue	IDC5D	1	8	Digital
NOx Range Wiper	NOx	306	Black	Screw Terminal Ground			
NOx Analog	NOx	103	Red	AIV	7	1	Analog
NOx Analog Return	NOx	203	Black	AIV	7	2	Analog
NOx Shield	**NOx**	**303**	**Shield**				

Opto Site 5 Lab 2	Rack Number	Cable Group Alpha 2219C
115 Volt AC Inputs	1	HC

Signal Name	Source Connector	Pin Number	Wire Color	Opto-22 Module	Module Number	Module Pin Number	Module Type
HC Cont. Sample	HC	TBD	Red	IAC5MA	2	1	Digital
Return			Black	IAC5MA	2	2	Digital
HC Zero	HC	TBD	White	IAC5MA	2	3	Digital
Return			Black	IAC5MA	2	4	Digital
HC Bag Analysis	HC	TBD	Green	IAC5MA	2	5	Digital
Return			Black	IAC5MA	2	6	Digital

Opto Site 5 Lab 2	Rack Number	Cable Group Alpha 2219C
115 Volt AC Inputs	1	HC Span

Signal Name	Source Connector	Pin Number	Wire Color	Opto-22 Module	Module Number	Module Pin Number	Module Type
HC Span 14	HC	TBD	Blue	IAC5MA	3	1	Digital
Return			Black	IAC5MA	3	2	Digital
HC Span 15	HC	TBD	Brown	IAC5MA	3	3	Digital
Return			Black	IAC5MA	3	4	Digital
HC Span 16	HC	TBD	Yellow	IAC5MA	3	5	Digital
Return			Black	IAC5MA	3	6	Digital
HC Span 17	HC	TBD	Orange	IAC5MA	3	7	Digital
Return			Black	IAC5MA	3	8	Digital

Opto Site 5 Lab 2	Rack Number	Cable Group Alpha 2219C
115 Volt AC Inputs	1	NOX

Signal Name	Source Connector	Pin Number	Wire Color	Opto-22 Module	Module Number	Module Pin Number	Module Type
NOX Cont. Sample	NOX	TBD	Red	IAC5MA	4	1	Digital
Return			Black	IAC5MA	4	2	Digital
NOX Zero	NOX	TBD	White	IAC5MA	4	3	Digital
Return			Black	IAC5MA	4	4	Digital
NOX Bag Analysis	NOX	TBD	Green	IAC5MA	4	5	Digital
Return			Black	IAC5MA	4	6	Digital

Opto Site 5 Lab 2	Rack Number	Cable Group Alpha 2219C
115 Volt AC Inputs	1	NOX Span

Signal Name	Source Connector	Pin Number	Wire Color	Opto-22 Module	Module Number	Module Pin Number	Module Type
NOX Span 14	NOX	TBD	Blue	IAC5MA	5	1	Digital
Return			Black	IAC5MA	5	2	Digital
NOX Span 15	NOX	TBD	Brown	IAC5MA	5	3	Digital
Return			Black	IAC5MA	5	4	Digital
NOX Span 16	NOX	TBD	Yellow	IAC5MA	5	5	Digital
Return			Black	IAC5MA	5	6	Digital
NOX Span 17	NOX	TBD	Orange	IAC5MA	5	7	Digital
Return			Black	IAC5MA	5	8	Digital

Bill of Materials for Sites 4 and 5

Opto-22 Parts Ordering Summary

QUANTITY	PART NUMBER	DESCRIPTION	Est. Total Cost
5	SNAP-B3000-ENET	Analog/Digital Ethernet Brain	$3475.00
1	SNAP-B8MC	8 Module rack with extra terminal block for field wiring	$104.00
4	SNAP-B12MC	12 Module rack with extra terminal block for field wiring	$532.00
20	SNAP-IDC5D	SNAP 4-Channel 2.5 – 28VDC Input	$780.00
1	SNAP-IDC5-FAST	SNAP 4-Channel 2.5 – 16VDC Input, Fast	$100.00
4	SNAP-IDC5	SNAP 4-Channel 10-32 VDC Input, 5 VDC Logic	$168.00
2	SNAP-ODC5SNK	SNAP 4-Channel 5-60 VDC Output, 5 VDC Logic Sink	$84.00
12	SNAP-AIV	SNAP 2-Channel analog voltage input -10VDC to +10VDC	$2108.00
1	SNAP-AIMA	SNAP 2 Channel analog current input -20MA to +20MA	$182.00
6	SNAP-IAC5MA	SNAP 4 Channel 115 Volt Input Module	$504.00
5	SNAP-PS5	5 Volt Power Supply	$1000.00
1	SNAP-PS24	24 Volt Power Supply	$200.00
28	SNAP-STRAP	Opto Accessory Module Jumper Strap	$252.00
10	SNAP-WIRESTRAP	Opto Accessory Wiring Jumper Strap	$56.00

Suggested Source: Opto-22 Sales and Marketing Department
43044 Business Park Drive
Temecula, CA 92590-3614
Voice: 800-452-6786
sales@opto22.com

Hoffman Box Ordering Summary

Quantity	**Hoffman Part Number**	**Description**	**Estimated Total Cost**
4	A-1614CH	CH Box 16.00x14.00x6.00	$480.00
1	A-1212CH	CH Box 12.00x12.00x6.00	$180.00
4	A-16P14	Painted Steel Panel 14.75x12.88	$56.00
1	A-12P12	Painted Steel Panel 10.75x10.75	$20.00

Suggested Source	Newark Electronics 1-800-463-9275

Miscellaneous Parts Summary

Quantity	Newark Part Number	Description	Price
5	37F3340	Belden 17501-C3-10 10 Foot Power Cord	$50.00
2	83F3368	8 Port Ethernet Hub 10Base-T	$150.00
Suggest Source:	Newark Electronics	1-800-463-9275	

Strain Relief Hardware

Quantity	Part Number	Description	Cost
25	Crouse-Hinds CGB193	Strain Relief- Cable Gland	$110.00
8	Crouse-Hinds CGB194	Strain Relief-Cable Gland	$40.00
2	Crouse-Hinds CGB-295	Strain Relief-Cable Gland	$20.00
Suggested Source	Any Electrical Supply House		