Chapter 10. Flowsheet Analysis for Pollution Prevention

by
Kirsten Sinclair Rosselot and David T. Allen

The environmental performance of a process flowsheet depends on both the performance of the individual unit operations that make up the flowsheet and on the level to which the process streams have been networked and integrated. While Chapter 9 describes methods for improving the performance of individual operations, this chapter examines methods for assessing and improving the degree to which the unit operations are integrated. Specifically, Section 10.2 examines process energy integration and Section 10.3 examines process mass integration. The methods presented in these sections, and the case study presented in Section 10.4, will demonstrate that improved process integration can lead to improvements in overall mass and energy efficiency.

Before examining process integration in detail, however, it is useful to review the methods that exist for systematically assessing and improving the environmental performance of process designs. A number of such methods are available. Some are analogous to Hazard and Operability (HAZ-OP) Analyses (e.g., see Crowl and Louvar, 1990).

Section 9.7 briefly describes how a HAZ-OP analysis is performed; to summarize, the potential hazard associated with each process stream is evaluated qualitatively (and sometimes quantitatively) by systematically considering possible deviations in the stream. Table 10.1-1 gives the guidewords and examples of deviations used in HAZ-OP analysis. Each guide word is applied to each relevant stream characteristic, the possible causes of the deviation are listed, and the consequences of the deviation are determined. Finally, the action(s) required to prevent the occurrence of the deviation are determined.

Table 10.1-1 Guide Words and Deviations in HAZ-OP Analysis.

Guide Word	Example Deviations
NO or NOT	No flow for an input stream
MORE	Higher flow rate, higher temperature, higher pressure, higher concentrations.
LESS	Lower flow rate, lower temperature, lower pressure, lower concentrations.
AS WELL AS	Extra phase present, impurity present.
PART OF	Change in ratio of components, component missing.
MORE THAN	Extra phase present, impurity present.
REVERSE	Pressure change causes a vent to become and INLET.
OTHER THAN	Conditions that can occur during startup, shutdown, catalyst changes, maintenance.

For a single pipeline taking fluid from one storage tank to another, there may be several possible deviations, such as:

- no flow
- more flow
- more pressure
- more temperature

- less flow
- less temperature
- high concentration of a particular component
- presence of undesirable compounds

Note that each deviation may have more than one possible cause so that this set of deviations would be associated with dozens of possible causes. It would be difficult to consider all the deviations and their consequences without a structured system for analyzing the flowsheet. A similar analysis framework has been employed, in a series of case studies, to identify environmental improvements in process flowsheets (DuPont, 1993). In these case studies, a series of systematic questions are raised concerning each process stream or group of unit processes. Typical questions include:

- What changes in operating procedures might reduce wastes?
- Would changes in raw materials or process chemistry be effective?
- Would improvements in process control be effective?

Process alternatives, such as those defined in Chapter 9, can be identified, and in this way the environmental improvement opportunities for the entire flowsheet can be systematically examined. (See, for example the cases from the DuPont report described by Allen and Rosselot,1997).

Other methods for systematically examining environmental improvement opportunities for flowsheets have been developed based on the hierarchical design methodologies developed by Douglas (1992). The hierarchical levels are shown in Table 10.1-2. Note that Level 1 in this table applies only to processes that are being designed, not to existing processes. The hierarchy is organized so that decisions that affect waste and emission generation at each level limit the decisions in the levels below it.

As an example of the use of hierarchical analysis procedures, consider a case study drawn from the AMOCO/US EPA Pollution Prevention Project at AMOCO's refinery in Yorktown, Virginia (Rossiter and Klee, 1995). In this example, the flowsheet of a fluidized-bed catalytic cracking unit (FCCU) is evaluated for pollution prevention options. A flowsheet of the unit is shown in Figure 10.1-1.

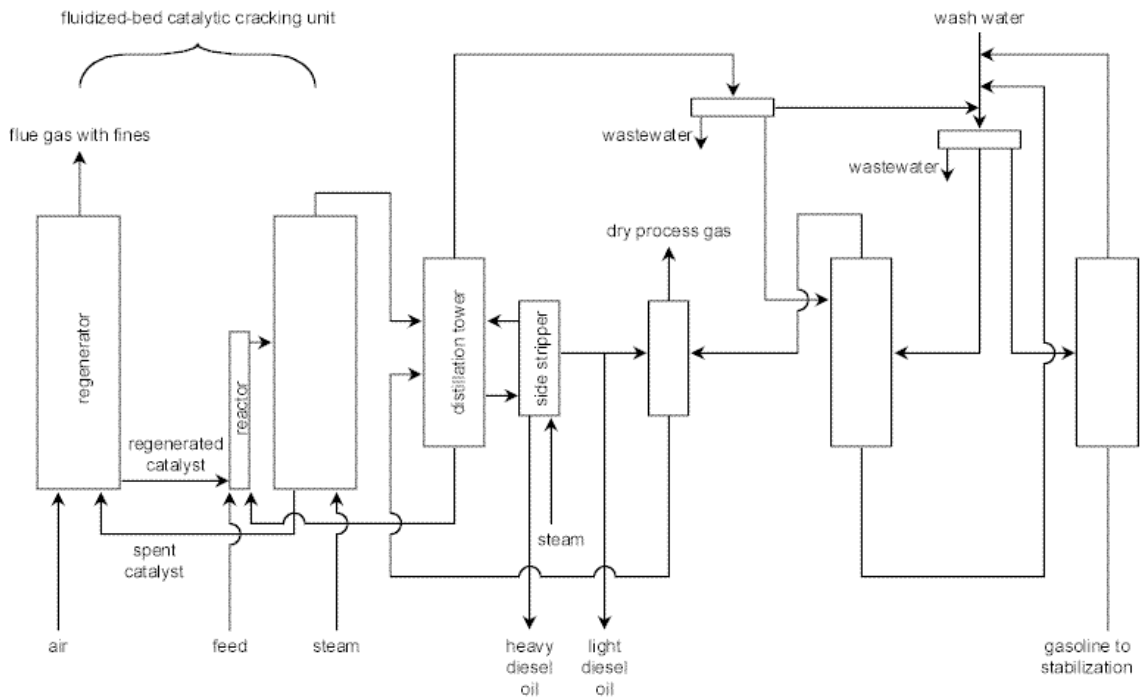

Figure 10.1-1 Process flow diagram of a fluidized-bed catalytic cracking unit.

Beginning with Level 2 of the hierarchy listed in Table 10.1-2, (input-output structure), the following pollution prevention strategies were generated:

1) Improve quality of the feed to eliminate or reduce the need for the vapor line washing system shown in the upper right-hand corner of Figure 10.1-1.

2) Reduce steam consumption in the reactor so that there is less condensate to remove from the distillation system.

3) Within the catalyst regeneration system, the loss of fines (upper left hand corner of Figure 10.1-1) is partly a function of the air input rate. A reduction in air flow (e.g. by using oxygen enrichment) is a possible means of reducing the discharge of fines.

Two ideas were generated during review of the recycle structure (level 3):

1) The reactor uses 26,000 lb/hr of steam. This is provided from the utility steam system. If this could be replaced with steam generated from process water, the liquid effluent from the unit would be reduced. Volatile hydrocarbons contained in the recycled steam would be returned directly to the process. Catalyst regeneration consumes more than 11,000 lb/hr of steam. It may be possible to satisfy this duty with "dirty steam" as well, since the hydrocarbon content would be incinerated with the coke in the regenerator.

2) Used wash water is collected at several points and then purged from the process. If it could be recovered and recycled instead, or if recycled water from other sources could be used for washing in place of fresh water, fresh water usage and wastewater generation could both be reduced by about 10,500 lb/hr.

Table 10.1-2 Levels for Hierarchical Analysis for Pollution Prevention (Adapted from Douglas, 1992)

Design Levels
1. Identify the material to be manufactured
2. Specify the input/output structure of the flowsheet
3. Design the recycle structure of the flowsheet
4. Specify the separation system
4a. General structure: phase splits
4b. Vapor recovery system
4c. Liquid recovery system
4d. Solid recovery system
5. Process integration
5a. Integrate process heating and cooling demands
5b. Identify process waste recycling and water reuse opportunities

Three options were identified for separation systems (level 4):

1) Replace heating done by direct contacting with steam by heating with reboilers.

2) Place additional oil-water separators downstream of existing condensate collection points and recover hydrocarbons.

3) Improve gas-solid separation downstream of the regenerator to eliminate loss of catalyst fines. This might simply require better cyclone and/or ductwork design, or electrostatic precipitation.

These first four levels of the design hierarchy lead us to the types of process improvements described in Chapter 9—improvements in the reactor and improvements in the separation system. As Table 10.2-1 notes, the next step in the design process is to identify opportunities for process integration. This is the main topic of this chapter and the next several sections describe methods for process energy integration and methods for identifying process waste recycling and reuse opportunities.

Chapter 10 Example Problem

Example 10.4 Constructing a Composition Interval Diagram

Construct a CID for the rich streams of Table 10.8. With the aid of this CID, calculate the mass transferred out of the rich streams in units of kg/s within each region of the CID. The mass transferred from the rich streams within each region is equal to $(y^{out}-y^{in})\times\Sigma R_i$, where y^{out} and y^{in} are the exiting and entering rich stream mass fractions, respectively, and ΣR_i is the sum of the rich stream flow rates in the region. Note that mass transfer is negative for the rich streams because they are losing mass.

Table 10.8 Stream data for three rich streams and one lean stream

Rich Stream				Lean Stream			
Stream	Flow Rate, kg/s	y^{in}	y^{out}	Stream	Flow Rate, kg/s	x^{in}	x^{out}
R_1	5	0.10	0.03	L	15	0.00	0.14
R_2	10	0.07	0.03				
R_3	5	0.08	0.01				

Solution

The rich streams are mapped from Table 10.8 to generate the CID shown in Figure 10.20. The mass transferred in each region is:

region 1= $(y^{out}-y^{in})\times\Sigma R_i$ = (0.08-0.10)5 kg/s = -0.10 kg/s

region 2= (0.07-0.08)(5+5) kg/s = -0.10 kg/s

region 3= (0.03-0.07)(5+10+5) kg/s = -0.80 kg/s

region 4= (0.01-0.03)5 kg/s = -0.10 kg/s

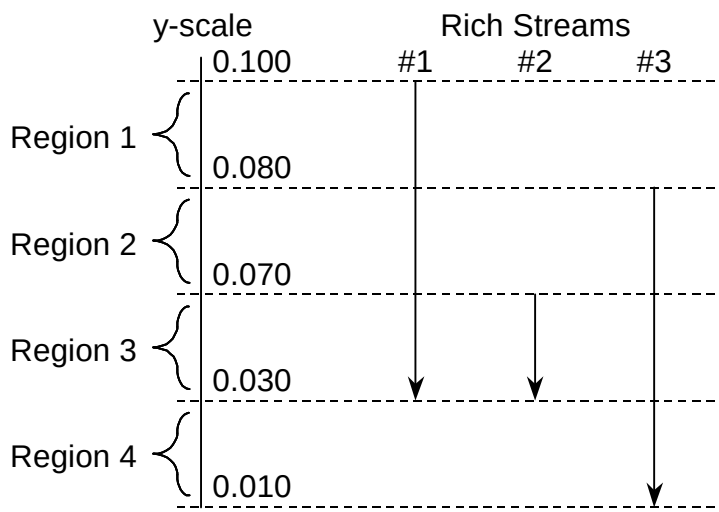

Figure 10.20 Composition interval diagram for the rich streams of Table 10.8

In Figure 10.19, the compositions of the rich and lean streams are on separate axes. These axes can be combined by applying the equilibrium relationship. If the equilibrium relationship in the region of interest for the species considered in this problem is given by

$$y = 0.67x^*,$$

then a mass fraction of $y = 0.1$ in the rich stream is in equilibrium with a mass fraction of $x^* = 0.15$ in the lean stream. By converting the lean stream compositions of Figure 10.19 to the rich stream compositions with which they are in equilibrium, and vice versa, a combined CID with shared axes as shown in Figure 10.21 can be constructed.

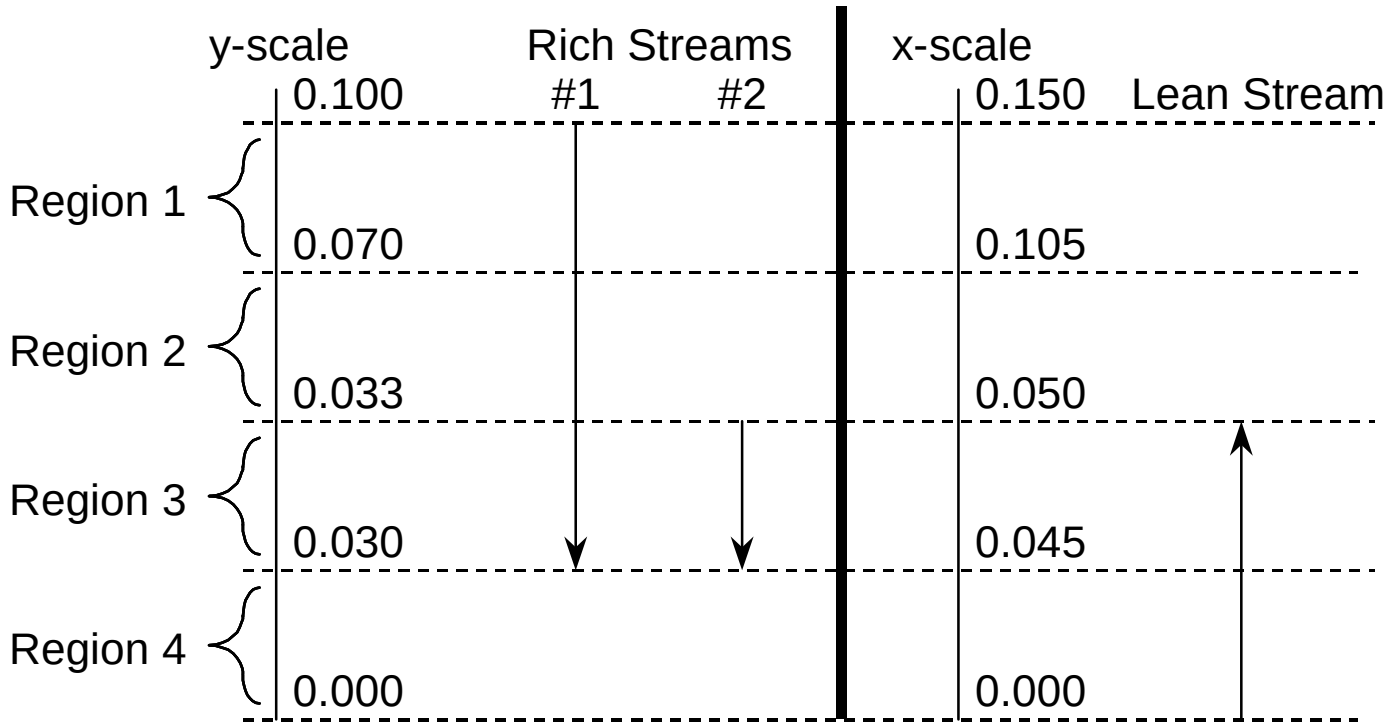

Figure 10-21. Combined composition interval diagram for the streams of Table 10.7.

Chapter 10 Sample Homework problem

1. Determine the amount of energy savings that could be achieved by putting in place a Heat exchange network in the hot water system for a typical house.

a.) Begin by identifying the hot water streams from which heat can be extracted (e.g., dishwasher effluent, shower effluent). For each of these streams, estimate a water exit temperature and a daily flow rate.

b.) Assume that these hot streams will be contacted with the cold supply water entering the hot water heater and estimate the amount of energy that could be extracted from the hot streams. Determine the annual energy savings if the home uses an electric hot water heater and electricity costs $0.06/kwh. Make reasonable assumptions about the efficiency of the hot water heater (fraction of the electricity that goes into heated water used by the homeowner).

c.) The cost of an installed, non-contact, single tube, shell and tube exchanger for this application is approximately $500. Assume that the hot water exit lines already pass near the water heater so that little additional plumbing is required. Determine the time required to repay the installation cost using money saved in energy costs.